THIS DRAWING IS UNPUBLISHED. RELEASED FOR PUBLICATION 2017
© COPYRIGHT 2017 BY TYCO ELECTRONICS CORPORATION. ALL RIGHTS RESERVED.

SET UP GAUGE 2119599-2 | LOC A | DIST 66

REVISIONS

P	LTR	DESCRIPTION	DATE	DWN	APVD
	A	RELEASED	09JUN2017	LG	TE

ATLANTIC VERSION TERMINATOR INTERFACE ADAPTER	PART NUMBER	REVISION	DESCRIPTION	FEED TYPE
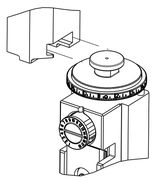	2150800-1	A	FINE CRIMP HEIGHT ADJUST	MECHANICAL
	2150800-2	A	FINE CRIMP HEIGHT ADJUST	PNEUMATIC
	2150800-5	A	FINE CRIMP HEIGHT ADJUST	SERVO LATCH PLATE 4
	2150800-6	A	NON-CRIMP HEIGHT ADJUST	SERVO 4 LATCH PLATE 12
	2150800-7	A	FINE CRIMP HEIGHT ADJUST	NONE
	7-2150800-7	A	CRIMP TOOLING KIT	-

APPLICATOR STYLE CONVERSION CHART

CONVERT TO	PART NUMBERS REQUIRED					
PNEUMATIC FEED	2119950-1	1-2119792-4	-	2119641-1	-	2063440-1
SERVO LATCH PLATE	2119951-1	1901697-1	8-2150800-5	-	-	2168400-7 (QUANTITY 2)
SMART APPLICATOR	2161326-1	-	8-2150800-4	-	-	-
MECHANICAL FEED	2119949-1	2063961-7	5-18022-5	2119653-1	-	-
SERVO LATCH PLATE	2119951-1	1901697-1	8-2150800-5	-	-	2168400-7 (QUANTITY 2)
SMART APPLICATOR	2161326-1	-	8-2150800-4	-	-	-
MECHANICAL FEED	2119949-1	2063961-7	5-18022-5	2119653-1	-	-
PNEUMATIC FEED	2119950-1	1-2119792-4	-	2119641-1	-	2063440-1
-	-	-	-	-	-	-
-	-	-	-	-	-	-
-	-	-	-	-	-	-
-	-	-	-	-	-	-

APPLICATOR DATA

CRIMP	SIZE	TYPE
WIRE	2.10 mm [.083]	F
INSUL	2.30 mm [.091]	F

APPL INSTRUCTIONS 408-10390

TERMINAL DATA: STOCKO TERMINAL STOCKO CRIMP SPECIFICATION

TERMINAL NAME: CONNECTOR TERMINAL

WIRE STRIP LENGTH: 4.80-5.80 mm [.189-.228 IN]

INSULATION DIAMETER RANGE: ∅0.90-1.80 mm [.035-.071 IN]

TERMINAL APPLICATION SPECIFICATION: F 071-2 Rev 12/12/2007 - - - - -

TERMINALS APPLIED 13 14

TE TERMINAL	STOCKO TERMINAL	TE TERMINAL	STOCKO TERMINAL
2303750-1	RSB 8115 F6.3-0.2		

WIRE SIZE	CRIMP HEIGHT mm [INCH]	CRIMP HEIGHT REFERENCE SETTING 9
22 AWG OR 0.34mm2	1.28+/-0.02 [.050+/-.001]	8.2
24 AWG OR 0.22mm2	1.22+/-0.02 [.048+/-.001]	9.0
26 AWG OR 0.12mm2	1.18+/-0.02 [.046+/-.001]	9.5

1 RECOMMENDED SPARE PARTS

2 GREASE BEARING SURFACES LIGHTLY

3. LUBRICATE DAILY PER THE APPLICATOR INSTRUCTION SHEET SUPPLIED WITH THE APPLICATOR.

4 APPLICATOR SPECIFIC DATA TO BE ENTERED INTO BLANK MEMORY CHIP AT ASSEMBLY. SEE BELOW FOR PART NUMBER:
MECHANICAL FEED WITH "SMART APPLICATOR" CONVERSION: 8-2150800-4
PNEUMATIC FEED WITH "SMART APPLICATOR" CONVERSION: 8-2150800-4
SERVO FEED WITH "FINE CRIMP HEIGHT ADJUST": 8-2150800-5
SERVO FEED WITH "NON-CRIMP HEIGHT ADJUST": 8-2150800-6

5. ADJUSTMENT OF THE STRIPPER MAY BE REQUIRED WHEN MOVING THE APPLICATOR BETWEEN BENCH AND LEADMAKER APPLICATIONS.

6 APPLY PART NUMBER 1-23419-5 LOCTITE TO THREADS OF ITEMS 62 & 180. APPLY PART NUMBER 2-23419-6 LOCTITE TO THREADS OF ITEM 242. FOR -6 ONLY APPLY PART NUMBER 1-23419-5 LOCTITE TO THREADS OF ITEMS 37 & 180.

7 GREASE THREADS, GROOVE AND O-RING ON ITEMS 35 & 252.

8 MAGNET, ITEM 166 MUST BE ORIENTED CORRECTLY IN ORDER TO PROPERLY ACTUATE THE COUNTER.

9 CRIMP HEIGHT REFERENCE SETTING WAS THE SETTING USED WHEN THE APPLICATOR WAS QUALIFIED AT THE FACTORY. ADJUSTMENT MAY BE NECESSARY WHEN RUNNING APPLICATOR IN THE FIELD.

10 SPARE FEED CAM STORAGE LOCATION REFER TO INSTRUCTION SHEET FOR ADDITIONAL INFORMATION.

11 THE RECOMMENDED SET-UP FOR END FEED APPLICATORS IS POST-FEED WITH ITEM 2119653-1. THE APPLICATOR CAN BE CONFIGURED FOR PRE-FEED WITH ITEM 2119652-1 BUT MAY ENCOUNTER PROBLEMS WITH SOME APPLICATIONS. FEED ISSUES OR TERMINAL JAMMING MAY OCCUR IN THE PRE-FEED CONFIGURATION.

12 WHEN ASSEMBLING -6 NON-CRIMP HEIGHT ADJUST APPLICATOR USE SHIM PACK 2119957-2 TO ALIGN APPLICATOR'S MAXIMUM WIRE CRIMP HEIGHT AT NORMAL TERMINATOR SHUT HEIGHT

13 TERMINAL LUBRICANT IS RECOMMENDED.

14 FEED FROM END OF TERMINAL BODY.

*WARNING
ON INSTALLATION, SET WIRE DISC, ITEM 40 TO LARGEST WIRE SIZE SETTING. USE OF SETTINGS BELOW MINIMUM REQUIRED CRIMP HEIGHT SETTING WILL CAUSE DAMAGE TO CRIMP TOOLING.

-77	-7	-6	-5	-2	-1	PART NO	DESCRIPTION	ITEM NO
-	-	1	-	-	-	2119957-2	APPLICATOR SHIM PACK	260
-	1	-	1	1	1	8-21084-0	O-RING, .676 ID, .070 DIA. MAT.	252
-	-	-	-	1	-	2119640-1	PUSH ROD, AIR FEED	250
-	-	-	-	1	-	1803259-1	BUSHING, FLANGED	249
-	-	-	-	1	-	2119641-1	FEED CAM, AIR FEED	248
-	1	-	1	1	1	2119798-1	DETENT PIN	247
-	1	-	1	1	1	1-22279-3	SPRING, COMPRESSION	246
-	-	1	-	-	-	2119759-1	RAM, AMP STYLE, END FEED, NON-ADJUST	245
-	1	1	1	1	1	2119082-4	CAM, SNAIL, INSULATION ADJUSTMENT	244
-	1	1	1	1	1	2079764-1	WASHER, WAVE SPRING, CREST-TO-CREST	243
-77	-7	-6	-5	-2	-1	PART NO	DESCRIPTION	ITEM NO
6 -	1	1	1	1	1	2119083-1	RETAINER, INSULATION DIAL	242
-	-	2	2	-	-	2168400-7	SHCS, LOW HEAD, RoHS, M5 X 10	240
-	-	-	-	-	1	2119580-1	MECHANICAL FEED ASSEMBLY	239
-	-	-	-	1	-	2063440-1	AIR FEED MODULE	238
-	-	1	1	-	-	2119740-2	TAG,IDENTIFICATION	213
-	2	2	2	2	2	2168083-1	SCR, SKT HD CAP, RoHS, M3 X 8.0	191
-	-	REF	REF	-	-	1901697-1	FEED FINGER ASSEMBLY,EF	183
6 -	1	1	1	1	1	1-1976055-1	STANDOFF, HOLD-DOWN	180
-	1	1	1	1	1	6-993111-6	PIN, SLOTTED SPRING 3.0 X 14.0	177
-	1	1	1	1	1	8-22280-7	SPRING, COMPRESSION	176
-	1	1	1	1	1	1752353-2	GUIDE PIN,HOLDDOWN	175
-	1	1	1	1	1	1901680-2	GUIDE PIN,HOLDDOWN	174
-	-	-	-	2	-	21045-3	RING, RETAIN, EXTERN, 3/16 CRESCENT	172
-	1	1	1	1	1	994969-1	MAGNET, RARE EARTH HIGH ENERGY	166
-	REF	REF	REF	REF	REF	994970-2	COUNTER, MAGNETIC	164
-	-	-	-	1	-	240638-1	SPRING, FEED FINGER	163
-	-	-	-	1	-	3-23627-7	PIN, RETAIN, GRVD, 3/16 X .854	137
-	-	REF	REF	-	-	SEE NOTE 4	MEMORY CHIP, PROGRAMMED	135
-	-	1	1	-	-	1633743-1	SERVO FEED LATCH ASM	133
13 -	1	1	1	1	1	2119955-2	ASSY, LUBRICATOR, END FEED	84
-	1	1	1	1	1	455888-7	SPACER, CRIMPER	82
-	1	1	1	1	1	2119791-5	DEPRESSOR, WIRE	73
-	1	1	1	1	1	2119956-2	DOCUMENTATION PACKAGE	71
-	2	2	2	2	2	2-18032-2	SCR, SET, FLT POINT M3 X 10.0	70
-	1	-	-	1	1	2119740-1	TAG,IDENTIFICATION	67
-	2	2	2	2	2	2168078-1	SCREW, DRIVE, RH, RoHS, 2 x .188	66
-	1	1	1	1	1	1901681-5	HOLDDOWN, TERMINAL	65
-	1	-	1	1	1	2119793-1	LIMITER, ADJUSTMENT BOLT	63
6 -	3	-	3	3	3	992763-5	SCR, SET, SOC, CONE POINT, M3 x 4.0	62
-	1	1	1	1	1	2079383-4	SCR, BHSC, RoHS (M4 X 8)	60
-	-	-	-	-	1	5-18022-5	SCR, HEX HD CAP, M4 X 6.0	59
-	-	-	-	-	1	2063961-7	FEED FINGER	58
-	4	4	4	4	4	2168400-4	SHCS, LOW HEAD, RoHS, M4 X 8	57
-	2	2	2	2	2	1-2168083-0	SCR, SKT HD CAP, RoHS, M4 X 10	56
-	2	2	2	2	2	5018030-1	NUT, HEX, REG, RoHS, M3	54
-	2	2	2	2	2	986965-8	NUT, LOCK, HEX, TORQUE (M4)	53
-	1	1	1	1	1	1-5018030-0	NUT, HEX, REG, RoHS, M3.5	52
-	-	-	-	1	-	1-2119792-4	PAWL, EF, AIR	51
-	-	-	-	1	2	18023-9	SCR, SKT HD CAP M4 X 6.0	49
-	-	-	-	-	1	2119652-1	FEED CAM, PRE FEED	48
-	-	-	-	-	1	2119653-1	FEED CAM, POST FEED	47
-	1	1	1	1	1	2119655-5	APPLICATOR BASIC ASSEMBLY, EF	46
-	1	-	1	1	1	2119369-1	RAM, AMP STYLE, END FEED	44
-	1	1	1	1	1	2079383-7	SCR, BHSC, RoHS (M8 X 25)	41
-	1	-	1	1	1	2119645-1	DISC, NUMBERED FA WIRE ADJUSTMENT	40
-	1	-	1	1	1	2119957-1	APPLICATOR SHIM PACK	39
-	1	1	1	1	1	1-2119644-2	RAM WASHER, PRECISION	38
6 -	1	1	1	1	1	2119085-1	FA HEAD, ATLANTIC STYLE	37
-	1	-	1	1	1	2119092-1	BOLT, ADJUSTMENT	35
-	8	8	8	8	8	1-18028-2	WASHER, FLAT, REG M4	33
-	2	2	2	2	2	2168083-9	SCR, SKT HD CAP, RoHS, M4 X 20	31
-	2	2	2	2	2	2168083-2	SCR, SKT HD CAP, RoHS, M4 X 8.0	29
-	1	1	1	1	1	240639-1	STRIPPER (MACHINING)	27
-	2	2	2	2	2	1-2168083-5	SCR, SKT HD CAP, RoHS, M4 X 30	25
-	1	1	1	1	1	1-1752371-6	PLATE, STRIP GUIDE	24
-	2	2	2	2	2	22281-8	SPRING, COMPRESSION	22
-	1	1	1	1	1	1633168-1	ARM, STOCK DRAG	21
-	1	1	1	1	1	2-464452-1	DRAG, STOCK	20
-	1	1	1	1	1	1803152-2	STRIP GUIDE, REAR	19
-	1	1	1	1	1	1803151-2	STRIP GUIDE, FRONT	18
-	4	4	4	4	4	1-2079383-1	SCR, BHSC, RoHS (M6 X 12)	17
-	1	1	1	1	1	1752360-1	SPACER,HOLD-DOWN	13
1 -	1	1	1	1	1	1-240644-7	PLATE, REAR SHEAR	11
-	-	-	-	-	-	-	-	10
1 -	1	1	1	1	1	5-690495-3	PLATE, FRONT SHEAR	9
1 1	1	1	1	1	1	3-1803257-1	ANVIL, COMBINATION, END FEED	8
1 -	1	1	1	1	1	2217206-2	BLADE, SLUG	7
-	-	-	-	-	-	-	-	6
-	1	1	1	1	1	6-240641-9	SPACER	5
-	1	1	1	1	1	1-238009-0	BLOCK, FL CRIMPER SPACER	4
1 1	1	1	1	1	1	3-1803223-1	CRIMPER, INSULATION F PREMIUM	3
-	1	1	1	1	1	455888-6	SPACER, CRIMPER	2
1 1	1	1	1	1	1	9-1803241-9	CRIMPER, WIRE F	1

ATLANTIC VERSION

Shown on sheets 1 of 4 & 2 of 4
(Pacific version shown on sheets 3 of 4 & 4 of 4)

THIS DRAWING IS A CONTROLLED DOCUMENT FOR TYCO ELECTRONICS CORPORATION. IT IS SUBJECT TO CHANGE AND THE CONTROLLING ENGINEERING ORGANIZATION SHOULD BE CONTACTED FOR THE LATEST REVISION.

DIMENSIONS: mm

TOLERANCES UNLESS OTHERWISE SPECIFIED: 0 PLC ±- 1 PLC ±- 2 PLC ±- 3 PLC ±- 4 PLC ±- ANGLES ±-

MATERIAL - -

FINISH - -

DWN B. WEAVER 05MAY2017
CHK T. ELBIN 05MAY2017
APVD T. ELBIN 05MAY2017

PRODUCT SPEC -

APPLICATION SPEC -

WEIGHT -

TE Connectivity
Harrisburg, PA 17105-3608

NAME Ocean End Feed Applicator -

SIZE A1 | CAGE CODE 00779 | DRAWING NO C-2150800 | RESTRICTED TO -

Customer Accessible Production Drawing | SCALE 1:1 | SHEET 1 OF 4 | REV A

SHEETS 3 & 4 ARE NOT REQUIRED FOR ATLANTIC VERSION

THIS DRAWING IS UNPUBLISHED. RELEASED FOR PUBLICATION 2017
© COPYRIGHT 2017 BY TYCO ELECTRONICS CORPORATION. ALL RIGHTS RESERVED.

LOC	DIST
A	66

REVISIONS

P	LTR	DESCRIPTION	DATE	DWN	APVD
	-	SEE SHEET 1	-	-	-

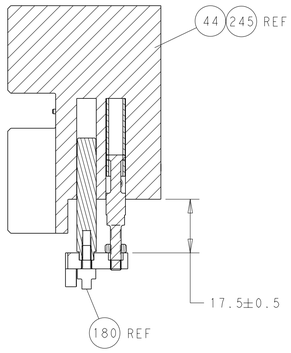

HOLDDOWN SET-UP

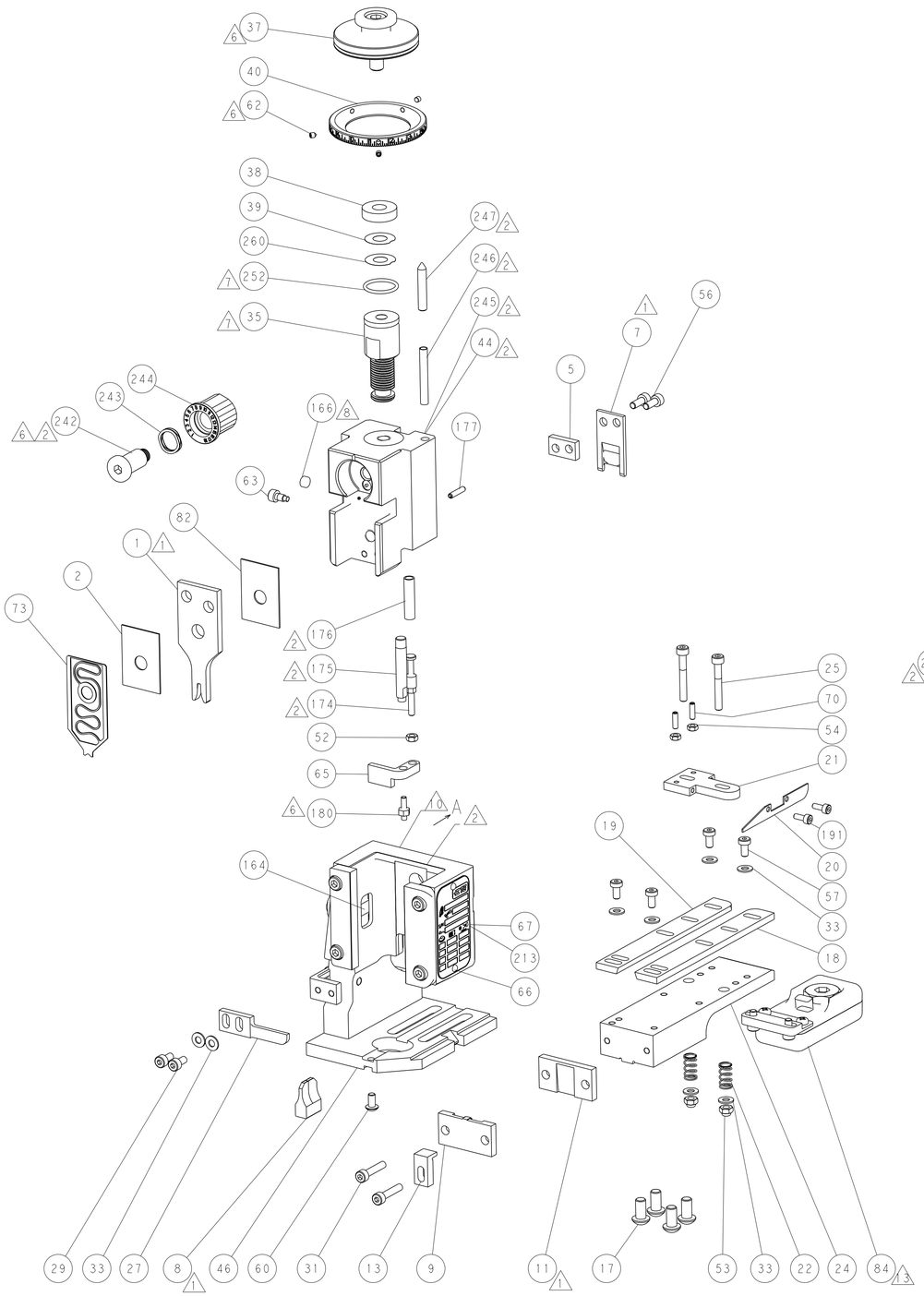

FEED TYPE MECHANICAL

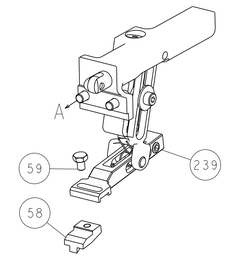

PNEUMATIC

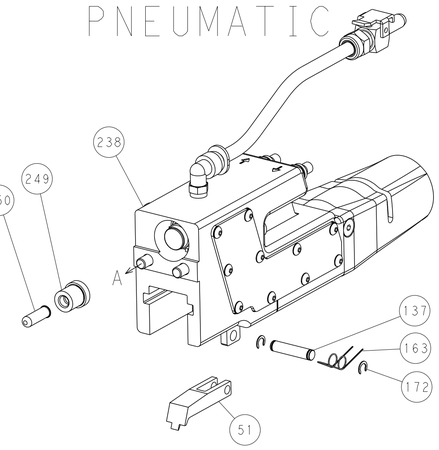

SERVO LATCH PLATE

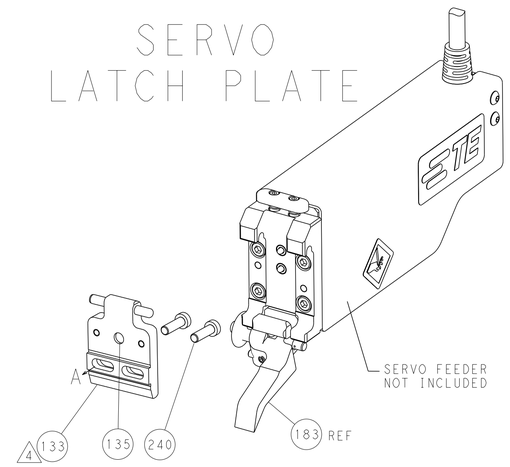

CAM POSITIONS

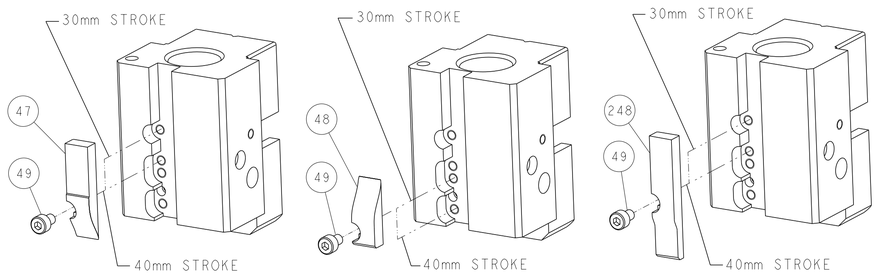

ATLANTIC VERSION
Shown on sheets 1 of 4 & 2 of 4
(Pacific version shown on sheets 3 of 4 & 4 of 4)

THIS DRAWING IS A CONTROLLED DOCUMENT FOR TYCO ELECTRONICS CORPORATION. IT IS SUBJECT TO CHANGE AND THE CONTROLLING ENGINEERING ORGANIZATION SHOULD BE CONTACTED FOR THE LATEST REVISION.

DIMENSIONS: mm

TOLERANCES UNLESS OTHERWISE SPECIFIED:
0 PLC ±
1 PLC ±
2 PLC ±
3 PLC ±
4 PLC ±
ANGLES ±

MATERIAL - - -
FINISH - - -

DWN B. WEAVER 05MAY2017
CHK T. ELBIN 05MAY2017
APVD T. ELBIN 05MAY2017
PRODUCT SPEC -
APPLICATION SPEC -
WEIGHT -

TE Connectivity
Harrisburg, PA 17105-3608

NAME Ocean End Feed Applicator -

SIZE	CAGE CODE	DRAWING NO	RESTRICTED TO
A1	00779	C-2150800	-

Customer Accessible Production Drawing | SCALE 1:1 | SHEET 2 OF 4 | REV A

AMP 4805 REV 31MAR2000

SHEETS 3 & 4 ARE NOT REQUIRED FOR ATLANTIC VERSION

THIS DRAWING IS UNPUBLISHED. RELEASED FOR PUBLICATION 2017
© COPYRIGHT 2017 BY TYCO ELECTRONICS CORPORATION. ALL RIGHTS RESERVED.

SET UP GAUGE	LOC	DIST
2119599-2	A	66

REVISIONS

P	LTR	DESCRIPTION	DATE	DWN	APVD
	-	SEE SHEET 1	-	-	-

PACIFIC VERSION TERMINATOR INTERFACE ADAPTER	PART NUMBER	REVISION	DESCRIPTION	FEED TYPE
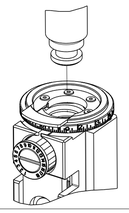	2-2150800-1	A	FINE CRIMP HEIGHT ADJUST	MECHANICAL
	2-2150800-2	A	FINE CRIMP HEIGHT ADJUST	PNEUMATIC
	2-2150800-5	A	FINE CRIMP HEIGHT ADJUST	SERVO LATCH PLATE 4
	2-2150800-7	A	FINE CRIMP HEIGHT ADJUST	NONE
	7-2150800-7	A	CRIMP TOOLING KIT	-

APPLICATOR STYLE CONVERSION CHART

CONVERT TO	PART NUMBERS REQUIRED					
PNEUMATIC FEED	2119950-1	1-2119792-4	-	2119641-2	-	2063440-1
SERVO LATCH PLATE	2119951-1	1901697-1	8-2150800-5	-	-	2168400-7 (QUANTITY 2)
SMART APPLICATOR	2161326-1	-	8-2150800-4	-	-	-
MECHANICAL FEED	2119949-1	2063961-7	5-18022-5	2119653-2	-	-
SERVO LATCH PLATE	2119951-1	1901697-1	8-2150800-5	-	-	2168400-7 (QUANTITY 2)
SMART APPLICATOR	2161326-1	-	8-2150800-4	-	-	-
MECHANICAL FEED	2119949-1	2063961-7	5-18022-5	2119653-2	-	-
PNEUMATIC FEED	2119950-1	1-2119792-4	-	2119641-2	-	2063440-1
-	-	-	-	-	-	-
-	-	-	-	-	-	-

APPLICATOR DATA

CRIMP	SIZE	TYPE
WIRE	2.10 mm [.083]	F
INSUL	2.30 mm [.091]	F

APPL INSTRUCTIONS 408-10390

TERMINAL DATA: STOCKO TERMINAL STOCKO CRIMP SPECIFICATION

TERMINAL NAME: CONNECTOR TERMINAL

WIRE STRIP LENGTH	INSULATION DIAMETER RANGE
4.80-5.80 mm [.189-.228 IN]	∅0.90-1.80 mm [.035-.071 IN]

TERMINAL APPLICATION SPECIFICATION			
	F 071-2 Rev 12/12/2007	-	-
	-	-	-

TERMINALS APPLIED 12 13

TE TERMINAL	STOCKO TERMINAL	TE TERMINAL	STOCKO TERMINAL
2303750-1	RSB 8115 F6.3-0.2		

WIRE SIZE	CRIMP HEIGHT mm [INCH]	CRIMP HEIGHT REFERENCE SETTING 9
22 AWG OR 0.34mm2	1.28+/-0.02 [.050+/-.001]	8.2
24 AWG OR 0.22mm2	1.22+/-0.02 [.048+/-.001]	9.0
26 AWG OR 0.12mm2	1.18+/-0.02 [.046+/-.001]	9.5

1 RECOMMENDED SPARE PARTS

2 GREASE BEARING SURFACES LIGHTLY

3. LUBRICATE DAILY PER THE APPLICATOR INSTRUCTION SHEET SUPPLIED WITH THE APPLICATOR.

4 APPLICATOR SPECIFIC DATA TO BE ENTERED INTO BLANK MEMORY CHIP AT ASSEMBLY. SEE BELOW FOR PART NUMBER:
MECHANICAL FEED WITH "SMART APPLICATOR" CONVERSION: 8-2150800-4
PNEUMATIC FEED WITH "SMART APPLICATOR" CONVERSION: 8-2150800-4
SERVO FEED WITH "FINE CRIMP HEIGHT ADJUST": 8-2150800-5

5. ADJUSTMENT OF THE STRIPPER MAY BE REQUIRED WHEN MOVING THE APPLICATOR BETWEEN BENCH AND LEADMAKER APPLICATIONS.

6 APPLY PART NUMBER 1-23419-5 LOCTITE TO THREADS OF ITEMS 62 & 180. APPLY PART NUMBER 2-23419-6 LOCTITE TO THREADS OF ITEM 242.

7 GREASE THREADS, GROOVE AND O-RING ON ITEMS 139 & 153.

8 MAGNET, ITEM 166 MUST BE ORIENTED CORRECTLY IN ORDER TO PROPERLY ACTUATE THE COUNTER.

9 CRIMP HEIGHT REFERENCE SETTING WAS THE SETTING USED WHEN THE APPLICATOR WAS QUALIFIED AT THE FACTORY. ADJUSTMENT MAY BE NECESSARY WHEN RUNNING APPLICATOR IN THE FIELD.

10 SPARE FEED CAM STORAGE LOCATION REFER TO INSTRUCTION SHEET FOR ADDITIONAL INFORMATION.

11 THE RECOMMENDED SET-UP FOR END FEED APPLICATORS IS POST-FEED WITH ITEM 2119653-1. THE APPLICATOR CAN BE CONFIGURED FOR PRE-FEED WITH ITEM 2119652-1 BUT MAY ENCOUNTER PROBLEMS WITH SOME APPLICATIONS. FEED ISSUES OR TERMINAL JAMMING MAY OCCUR IN THE PRE-FEED CONFIGURATION.

12 TERMINAL LUBRICANT IS RECOMMENDED.

13 FEED FROM END OF TERMINAL BODY.

*WARNING
ON INSTALLATION, SET WIRE DISC, ITEM 40 TO LARGEST WIRE SIZE SETTING. USE OF SETTINGS BELOW MINIMUM REQUIRED CRIMP HEIGHT SETTING WILL CAUSE DAMAGE TO CRIMP TOOLING.

-77	-27	-25	-22	-21	PART NO	DESCRIPTION	ITEM NO
-	1	1	1	1	2119782-1	FINE ADJUST HEAD ASM, PACIFIC STYLE	251
-	-	-	1	-	2119640-1	PUSH ROD, AIR FEED	250
-	-	-	1	-	1803259-1	BUSHING, FLANGED	249
-	1	1	1	1	1-22279-3	SPRING, COMPRESSION	246
-	1	1	1	1	2119082-4	CAM, SNAIL, INSULATION ADJUSTMENT	244
-	1	1	1	1	2079764-1	WASHER, WAVE SPRING, CREST-TO-CREST	243
6 -	1	1	1	1	2119083-1	RETAINER, INSULATION DIAL	242
-	-	2	-	-	2168400-7	SHCS, LOW HEAD, RoHS, M5 X 10	240

-77	-27	-25	-22	-21	PART NO	DESCRIPTION	ITEM NO
-	-	-	-	1	2119580-1	MECHANICAL FEED ASSEMBLY	239
-	-	-	1	-	2063440-1	AIR FEED MODULE	238
-	-	1	-	-	2119740-2	TAG,IDENTIFICATION	213
-	2	2	2	2	2168083-1	SCR, SKT HD CAP, RoHS, M3 X 8.0	191
-	4	4	4	4	2079383-9	SCR, BHSC, RoHS (M6 X 20)	186
-	-	REF	-	-	1901697-1	FEED FINGER ASSEMBLY,EF	183
6 -	1	1	1	1	1-1976055-1	STANDOFF, HOLD-DOWN	180
-	1	1	1	1	6-993111-6	PIN, SLOTTED SPRING 3.0 X 14.0	177
-	1	1	1	1	8-22280-7	SPRING, COMPRESSION	176
-	1	1	1	1	1752353-2	GUIDE PIN,HOLDDOWN	175
-	1	1	1	1	1901680-2	GUIDE PIN,HOLDDOWN	174
-	-	-	2	-	21045-3	RING, RETAIN, EXTERN, 3/16 CRESCENT	172
-	1	1	1	1	994969-1	MAGNET, RARE EARTH HIGH ENERGY	166
-	REF	REF	REF	REF	994970-2	COUNTER, MAGNETIC	164
-	-	-	1	-	240638-1	SPRING, FEED FINGER	163
-	1	1	1	1	8-21084-1	O-RING, .801 ID, .070 DIA. MAT.	153
-	-	-	1	-	2119641-2	FEED CAM, AIR FEED	152
-	1	1	1	1	2119798-2	DETENT PIN	145
-	1	1	1	1	2079383-8	SCR, BHSC, RoHS (M4 X 16)	144
-	-	-	-	1	2119653-2	FEED CAM, POST FEED	142
-	1	1	1	1	2119655-6	APPLICATOR BASIC ASSEMBLY, EF	141
-	1	1	1	1	2119651-1	RAM, ASIAN STYLE, END FEED	140
-	1	1	1	1	2119092-2	BOLT, ADJUSTMENT	139
-	-	-	1	-	3-23627-7	PIN, RETAIN, GRVD, 3/16 X .854	137
-	-	REF	-	-	SEE NOTE 4	MEMORY CHIP, PROGRAMMED	135
-	-	1	-	-	1633743-1	SERVO FEED LATCH ASM	133
12 -	1	1	1	1	2119955-2	ASSY, LUBRICATOR, END FEED	84
-	1	1	1	1	455888-7	SPACER, CRIMPER	82
-	1	1	1	1	2119791-5	DEPRESSOR, WIRE	73
-	1	1	1	1	2119956-2	DOCUMENTATION PACKAGE	71
-	2	2	2	2	2-18032-2	SCR, SET, FLT POINT M3 X 10.0	70
-	1	-	1	1	2119740-1	TAG,IDENTIFICATION	67
-	2	2	2	2	2168078-1	SCREW, DRIVE, RH, RoHS, 2 x .188	66
-	1	1	1	1	1901681-5	HOLDDOWN, TERMINAL	65
-	1	1	1	1	2119793-1	LIMITER, ADJUSTMENT BOLT	63
6 -	3	3	3	3	992763-5	SCR, SET, SOC, CONE POINT, M3 x 4.0	62
-	-	-	-	1	5-18022-5	SCR, HEX HD CAP, M4 X 6.0	59
-	-	-	-	1	2063961-7	FEED FINGER	58
-	4	4	4	4	2168400-4	SHCS, LOW HEAD, RoHS, M4 X 8	57
-	2	2	2	2	1-2168083-0	SCR, SKT HD CAP, RoHS, M4 X 10	56
-	2	2	2	2	5018030-1	NUT, HEX, REG, RoHS, M3	54
-	2	2	2	2	986965-8	NUT, LOCK, HEX, TORQUE (M4)	53
-	1	1	1	1	1-5018030-0	NUT, HEX, REG, RoHS, M3.5	52
-	-	-	1	-	1-2119792-4	PAWL, EF, AIR	51
-	-	-	1	2	18023-9	SCR, SKT HD CAP M4 X 6.0	49
-	-	-	-	1	2119652-1	FEED CAM, PRE FEED	48
-	1	1	1	1	2079383-7	SCR, BHSC, RoHS (M8 X 25)	41
-	1	1	1	1	2119645-1	DISC, NUMBERED FA WIRE ADJUSTMENT	40
-	1	1	1	1	2119957-1	APPLICATOR SHIM PACK	39
-	1	1	1	1	1-2119644-2	RAM WASHER, PRECISION	38
-	8	8	8	8	1-18028-2	WASHER, FLAT, REG M4	33
-	2	2	2	2	2168083-9	SCR, SKT HD CAP, RoHS, M4 X 20	31
-	2	2	2	2	2168083-2	SCR, SKT HD CAP, RoHS, M4 X 8.0	29
-	1	1	1	1	240639-1	STRIPPER (MACHINING)	27
-	2	2	2	2	1-2168083-5	SCR, SKT HD CAP, RoHS, M4 X 30	25
-	1	1	1	1	1-1752371-6	PLATE, STRIP GUIDE	24
-	2	2	2	2	22281-8	SPRING, COMPRESSION	22
-	1	1	1	1	1633168-1	ARM, STOCK DRAG	21
-	1	1	1	1	2-464452-1	DRAG, STOCK	20
-	1	1	1	1	1803152-2	STRIP GUIDE, REAR	19
-	1	1	1	1	1803151-2	STRIP GUIDE, FRONT	18
-	1	1	1	1	1752360-1	SPACER,HOLD-DOWN	13
1 -	1	1	1	1	1-240644-7	PLATE, REAR SHEAR	11
-	-	-	-	-	-	-	10
1 -	1	1	1	1	5-690495-3	PLATE, FRONT SHEAR	9
1 1	1	1	1	1	3-1803257-1	ANVIL, COMBINATION, END FEED	8
1 -	1	1	1	1	2217206-2	BLADE, SLUG	7
-	-	-	-	-	-	-	6
-	1	1	1	1	6-240641-9	SPACER	5
-	1	1	1	1	1-238009-0	BLOCK, FL CRIMPER SPACER	4
1 1	1	1	1	1	3-1803223-1	CRIMPER, INSULATION F PREMIUM	3
-	1	1	1	1	455888-6	SPACER, CRIMPER	2
1 1	1	1	1	1	9-1803241-9	CRIMPER, WIRE F	1

PACIFIC VERSION

Shown on sheets 3 of 4 & 4 of 4
(Atlantic version shown on sheets 1 of 4 & 2 of 4)

THIS DRAWING IS A CONTROLLED DOCUMENT FOR TYCO ELECTRONICS CORPORATION. IT IS SUBJECT TO CHANGE AND THE CONTROLLING ENGINEERING ORGANIZATION SHOULD BE CONTACTED FOR THE LATEST REVISION.

DIMENSIONS: mm
TOLERANCES UNLESS OTHERWISE SPECIFIED:
0 PLC ±-
1 PLC ±-
2 PLC ±-
3 PLC ±-
4 PLC ±-
ANGLES ±-
MATERIAL - -
FINISH - -

DWN B. WEAVER 05MAY2017
CHK T. ELBIN 05MAY2017
APVD T. ELBIN 05MAY2017
PRODUCT SPEC -
APPLICATION SPEC -
WEIGHT -

TE Connectivity
Harrisburg, PA 17105-3608

NAME Ocean End Feed Applicator -

SIZE	CAGE CODE	DRAWING NO	RESTRICTED TO
A1	00779	C-2150800	-

Customer Accessible Production Drawing | SCALE 1:1 | SHEET 3 OF 4 | REV A

AMP 4805 REV 31MAR2000

SHEETS 1 & 2 ARE NOT REQUIRED FOR PACIFIC VERSION

THIS DRAWING IS UNPUBLISHED. RELEASED FOR PUBLICATION 2017
© COPYRIGHT 2017 BY TYCO ELECTRONICS CORPORATION. ALL RIGHTS RESERVED.

LOC	DIST
A	66

REVISIONS

P	LTR	DESCRIPTION	DATE	DWN	APVD
	-	SEE SHEET 1	-	-	-

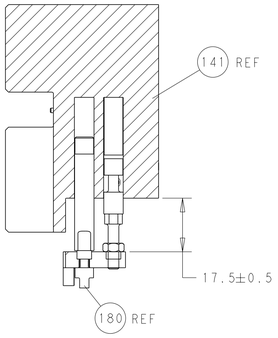

HOLDDOWN SET-UP

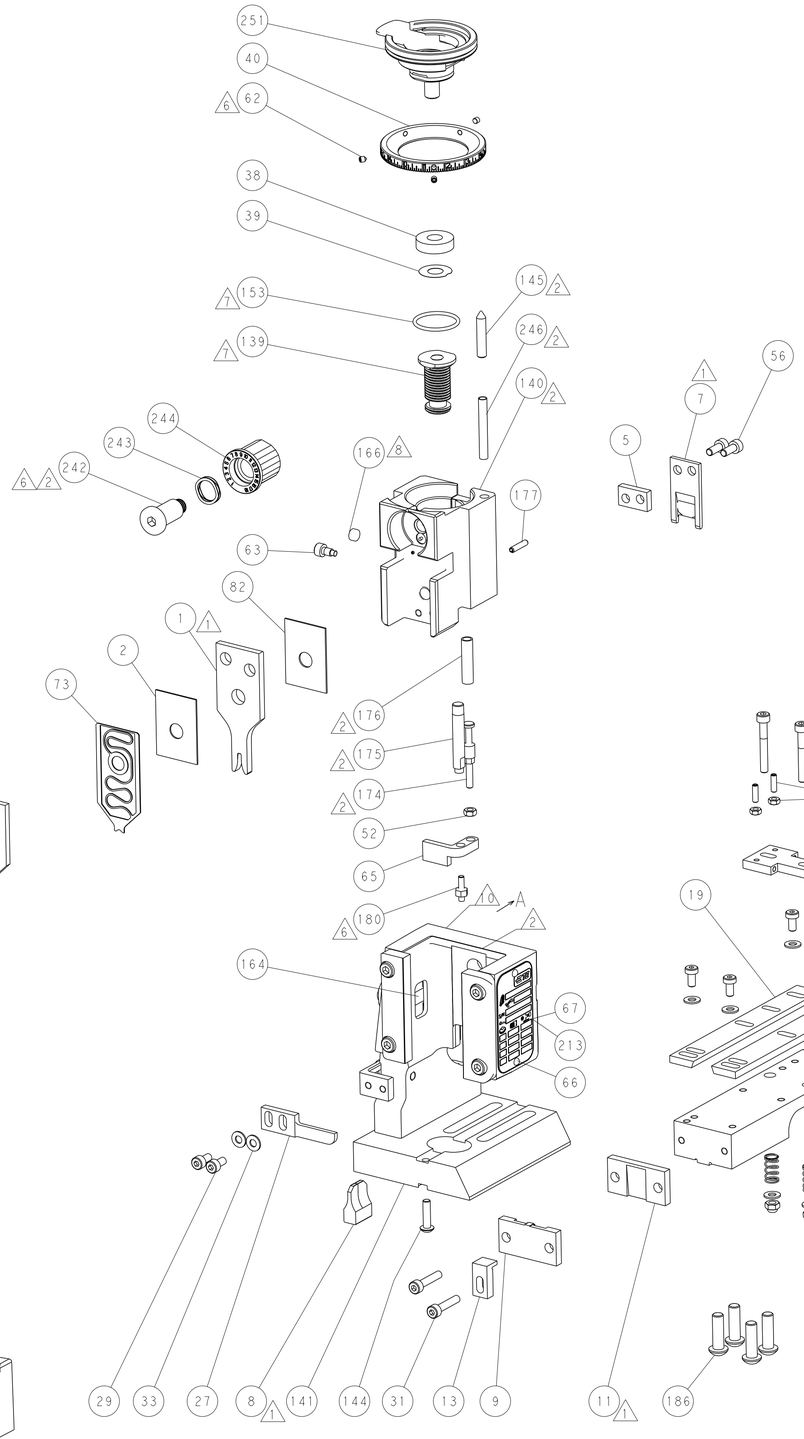

FEED TYPE

MECHANICAL

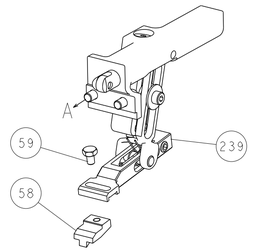

PNEUMATIC

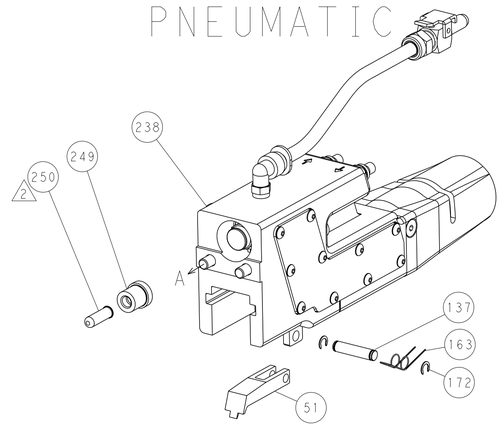

SERVO
LATCH PLATE

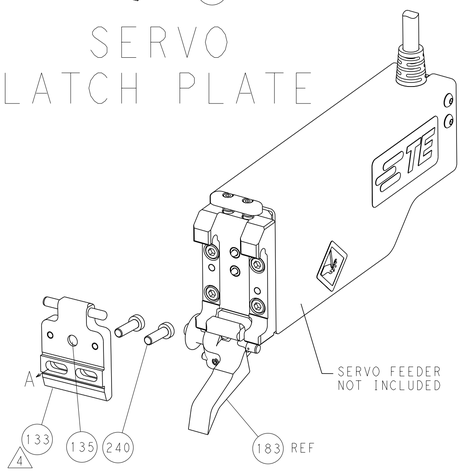

CAM POSITIONS

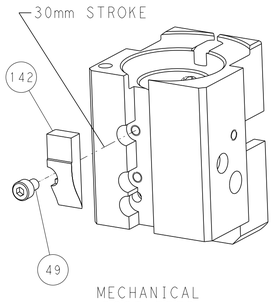

MECHANICAL
POST FEED

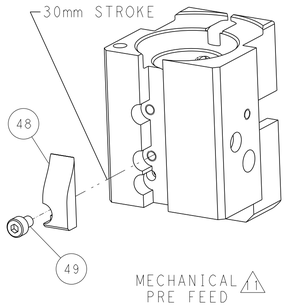

MECHANICAL
PRE FEED

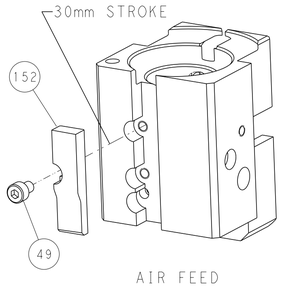

AIR FEED

PACIFIC VERSION
Shown on sheets 3 of 4 & 4 of 4
(Atlantic version shown on sheets 1 of 4 & 2 of 4)

THIS DRAWING IS A CONTROLLED DOCUMENT FOR TYCO ELECTRONICS CORPORATION. IT IS SUBJECT TO MODIFICATION. ANY PERSON OR ORGANIZATION SHOULD BE CONTACTED FOR THE LATEST REVISION.

DIMENSIONS: mm

TOLERANCES UNLESS OTHERWISE SPECIFIED:
0 PLC ±-
1 PLC ±-
2 PLC ±-
3 PLC ±-
4 PLC ±-
ANGLES ±-

MATERIAL - -
FINISH - -

DWN	B. WEAVER	05MAY2017
CHK	T. ELBIN	05MAY2017
APVD	T. ELBIN	05MAY2017

PRODUCT SPEC -
APPLICATION SPEC -
WEIGHT -

TE Connectivity
Harrisburg, PA 17105-3608

NAME: Ocean End Feed Applicator -

SIZE	CAGE CODE	DRAWING NO	RESTRICTED TO
A1	00779	C-2150800	-

Customer Accessible Production Drawing | SCALE 1:1 | SHEET 4 OF 4 | REV A

AMP 4805 REV 31MARZ000

SHEETS 1 & 2 ARE NOT REQUIRED FOR PACIFIC VERSION

Mouser Electronics

Authorized Distributor

Click to View Pricing, Inventory, Delivery & Lifecycle Information:

TE Connectivity:

2150800-2