THIS DRAWING IS UNPUBLISHED. RELEASED FOR PUBLICATION 20
© COPYRIGHT 20 BY TYCO ELECTRONICS CORPORATION. ALL RIGHTS RESERVED.

SET UP GAUGE 2119599-2	LOC	DIST
	A	66

REVISIONS

P	LTR	DESCRIPTION	DATE	DWN	APVD
	A	RELEASED	07FEB2013	RK	GB

ATLANTIC VERSION TERMINATOR INTERFACE ADAPTER	PART NUMBER	REVISION	DESCRIPTION	FEED TYPE
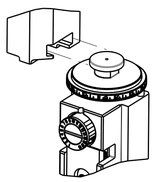	2150293-2	A	FINE CRIMP HEIGHT ADJUST	PNEUMATIC
	2150293-5	A	FINE CRIMP HEIGHT ADJUST	SERVO LATCH PLATE 4
	2150293-6	A	NON-CRIMP HEIGHT ADJUST	4 SERVO LATCH PLATE 11
	2150293-7	A	FINE CRIMP HEIGHT ADJUST	NONE
	7-2150293-7	A	CRIMP TOOLING KIT	-

APPLICATOR STYLE CONVERSION CHART

CONVERT TO	PART NUMBERS REQUIRED					
-	-	-	-	-	-	-
SERVO LATCH PLATE	2119951-1	1901697-1	8-2150293-5	-	-	2168400-7 (QUANTITY 2)
SMART APPLICATOR	2161326-1	-	8-2150293-4	-	-	-
-	-	-	-	-	-	-
PNEUMATIC FEED	2119950-1	2119792-1	-	2119641-1	-	2063440-2
-	-	-	-	-	-	-
-	-	-	-	-	-	-
-	-	-	-	-	-	-

APPLICATOR DATA		
CRIMP	SIZE	TYPE
WIRE	2.79 mm [.110]	F
INSUL	3.94 mm [.155]	F
APPLICATOR INSTRUCTIONS 408-10390		

TERMINAL DATA: TE TERMINAL		TE CRIMP SPECIFICATION
TERMINAL NAME: RING		
WIRE STRIP LENGTH 5.59-6.35 mm [.220-.250 IN]	INSULATION DIAMETER RANGE ∅2.54-3.56 mm [.100-.140 IN]	
TERMINAL APPLICATION SPECIFICATION	114-2084	-
	-	-

TERMINALS APPLIED

TE TERMINAL	TE TERMINAL	TE TERMINAL	TE TERMINAL
63518-1			

WIRE SIZE	CRIMP HEIGHT mm [INCH]	CRIMP HEIGHT REFERENCE SETTING 9
14 AWG	2.16+/-0.05 [.085+/-.002]	5.9
16 AWG	1.93+/-0.05 [.076+/-.002]	8.2
18 AWG	1.80+/-0.05 [.071+/-.002]	9.7

1. RECOMMENDED SPARE PARTS
2. GREASE BEARING SURFACES LIGHTLY
3. LUBRICATE DAILY PER THE APPLICATOR INSTRUCTION SHEET SUPPLIED WITH THE APPLICATOR.
4. APPLICATOR SPECIFIC DATA TO BE ENTERED INTO BLANK MEMORY CHIP AT ASSEMBLY, SEE BELOW FOR PART NUMBER:
   PNEUMATIC FEED WITH "SMART APPLICATOR" CONVERSION: 8-2150293-4
   SERVO FEED WITH "FINE CRIMP HEIGHT ADJUST": 8-2150293-5
   SERVO FEED WITH "NON-CRIMP HEIGHT ADJUST": 8-2150293-6
5. ADJUSTMENT OF THE STRIPPER MAY BE REQUIRED WHEN MOVING THE APPLICATOR BETWEEN BENCH AND LEADMAKER APPLICATIONS.
6. APPLY PART NUMBER 1-23419-5 LOCTITE TO THREADS OF ITEMS 62 & 242. FOR -6 ONLY APPLY PART NUMBER 1-23419-5 LOCTITE TO THREADS OF ITEMS 37 & 242.
7. GREASE THREADS, GROOVE AND O-RING ON ITEMS 35 & 252.
8. MAGNET, ITEM 166 MUST BE ORIENTED CORRECTLY IN ORDER TO PROPERLY ACTUATE THE COUNTER.
9. CRIMP HEIGHT REFERENCE SETTING WAS THE SETTING USED WHEN THE APPLICATOR WAS QUALIFIED AT THE FACTORY. ADJUSTMENT MAY BE NECESSARY WHEN RUNNING APPLICATOR IN THE FIELD.
10. TERMINAL PITCH NOT COMPATIBLE WITH MECHANICAL FEED.
11. WHEN ASSEMBLING -6 NON-CRIMP HEIGHT ADJUST APPLICATOR USE SHIM PACK 2119957-2 TO ALIGN APPLICATOR'S MAXIMUM WIRE CRIMP HEIGHT AT NORMAL TERMINATOR SHUT HEIGHT

*WARNING
ON INSTALLATION, SET WIRE DISC, ITEM 40 TO LARGEST WIRE SIZE SETTING. USE OF SETTINGS BELOW MINIMUM REQUIRED CRIMP HEIGHT SETTING WILL CAUSE DAMAGE TO CRIMP TOOLING.

-77	-7	-6	-5	-2	PART NO	DESCRIPTION	ITEM NO
-	-	1	-	-	2119957-2	APPLICATOR SHIM PACK	260
-	1	-	1	1	8-21084-0	O-RING, .676 ID, .070 DIA. MAT.	252
-	-	-	-	1	2119640-1	PUSH ROD, AIR FEED	250
-	-	-	-	1	2079988-1	BUSHING, LCH5-12, MISUMI	249
-	-	-	-	1	2119641-1	FEED CAM, AIR FEED	248
-	1	-	1	1	2119798-1	DETENT PIN	247
-	1	-	1	1	1-22279-3	SPRING, COMPRESSION	246
-	-	1	-	-	2119759-1	RAM, AMP STYLE, END FEED, NON-ADJUST	245
-	1	1	1	1	2119082-9	CAM, SNAIL, INSULATION ADJUSTMENT	244
-	1	1	1	1	2079764-1	WASHER, WAVE SPRING, CREST-TO-CREST	243
-	1	1	1	1	2119083-1	RETAINER, INSULATION DIAL	242
-	-	2	2	-	2168400-7	SHCS, LOW HEAD, RoHS, M5 X 10	240
-	-	-	-	-	2119580-1	MECHANICAL FEED ASSEMBLY	239
-	-	-	-	1	2063440-2	AIR FEED MODULE	238
-	-	1	1	-	2119740-2	TAG,IDENTIFICATION	213
-	-	REF	REF	-	1901697-1	FEED FINGER ASSEMBLY,EF	183
-	-	-	-	2	21045-3	RING, RETAIN, EXTERN, 3/16 CRESCENT	172
-	1	1	1	1	994969-1	MAGNET, RARE EARTH HIGH ENERGY	166
-	REF	REF	REF	REF	994970-2	COUNTER, MAGNETIC	164
-	-	-	-	1	240638-1	SPRING, FEED FINGER	163
-	-	-	-	1	3-23627-7	PIN, RETAIN, GRVD, 3/16 X .854	137
-	-	REF	REF	-	SEE NOTE 4	MEMORY CHIP, PROGRAMMED	135
-	-	1	1	-	1633743-1	SERVO FEED LATCH ASM	133
-	1	1	1	1	455888-4	SPACER, CRIMPER	82
-	1	1	1	1	2119956-2	DOCUMENTATION PACKAGE	71
-	2	2	2	2	2-18032-2	SCR, SET, FLT POINT M3 X 10.0	70
-	1	1	1	1	2119943-1	WASHER, SPACER	69
-	1	-	-	1	2119740-1	TAG,IDENTIFICATION	67
-	2	2	2	2	2168078-1	SCREW, DRIVE, RH, RoHS	66
-	1	-	1	1	2119793-1	LIMITER, ADJUSTMENT BOLT	63
-	3	-	3	3	992763-5	SCR, SET, SOC, CONE POINT, M3 x 4.0	62
-	1	1	1	1	2079383-4	SCR, BHSC, RoHS (M4 X 8)	60
-	-	-	-	-	2063961-1	FEED FINGER	58
-	4	4	4	4	2168400-4	SHCS, LOW HEAD, RoHS, M4 X 8	57
-	2	2	2	2	2168083-3	SCR, SKT HD CAP, RoHS, M4 X 12.0	56
-	2	2	2	2	5018030-2	NUT, HEX, REG, RoHS, M4	55
-	2	2	2	2	5018030-1	NUT, HEX, REG, RoHS, M3	54
-	2	2	2	2	986965-8	NUT, LOCK, HEX, TORQUE (M4)	53
-	-	-	-	1	2119792-1	PAWL, EF, AIR	51
-	-	-	-	1	18023-9	SCR, SKT HD CAP M4 X 6.0	49
-	1	1	1	1	2119655-5	APPLICATOR BASIC ASSEMBLY, EF	46
-	1	-	1	1	2119369-1	RAM,AMP STYLE, END FEED	44
-	1	1	1	1	2079383-7	SCR, BHSC, RoHS (M8 X 25)	41
-	1	-	1	1	2119645-1	DISC, NUMBERED FA WIRE ADJUSTMENT	40
-	1	-	1	1	2119957-1	APPLICATOR SHIM PACK	39
-	1	1	1	1	2119644-2	RAM WASHER, PRECISION	38
-	1	1	1	1	2119085-1	FA HEAD, ATLANTIC STYLE	37
-	1	-	1	1	2119092-1	BOLT, ADJUSTMENT	35
-	8	8	8	8	1-18028-2	WASHER, FLAT, REG M4	33
-	2	2	2	2	2168083-9	SCR, SKT HD CAP, RoHS, M4 X 20	31
-	2	2	2	2	1-2168083-0	SCR, SKT HD CAP, RoHS, M4 X 10	29
-	1	1	1	1	240639-1	STRIPPER (MACHINING)	27
-	2	2	2	2	1320906-1	STUD, THREADED	25
-	1	1	1	1	1752371-5	PLATE, STRIP GUIDE	24
-	2	2	2	2	2-22281-3	SPRING, COMPRESSION	22
-	1	1	1	1	1752373-4	DRAG	20
-	1	1	1	1	1901696-3	STRIP GUIDE, REAR	19
-	1	1	1	1	1901695-3	STRIP GUIDE, FRONT	18
-	4	4	4	4	1-2079383-1	SCR, BHSC, RoHS (M6 X 12)	17
-	1	1	1	1	240641-6	SPACER	16
-	1	1	1	1	240644-1	PLATE, REAR SHEAR	11
-	2	2	2	2	240645-1	SPACER, SHEAR PLATE	10
-	1	1	1	1	690482-5	PLATE, FRONT SHEAR	9
1	1	1	1	1	2-1803000-2	ANVIL, COMBINATION, END FEED	8
-	1	1	1	1	2217206-7	BLADE, SLUG	7
-	1	1	1	1	2-240641-0	SPACER	5
-	1	1	1	1	238009-1	BLOCK, FL CRIMPER SPACER	4
1	1	1	1	1	3-2119582-6	CRIMPER, INSULATION F PREMIUM	3
-	1	1	1	1	1-455888-0	SPACER, CRIMPER	2
1	1	1	1	1	1-456408-9	CRIMPER, WIRE PREMIUM	1

ATLANTIC VERSION
Shown on sheets 1 of 4 & 2 of 4
(Pacific version shown on sheets 3 of 4 & 4 of 4)

THIS DRAWING IS A CONTROLLED DOCUMENT FOR TYCO ELECTRONICS CORPORATION. IT IS SUBJECT TO CHANGE AND THE CONTROLLING ENGINEERING ORGANIZATION SHOULD BE CONTACTED FOR THE LATEST REVISION.

DIMENSIONS: mm
TOLERANCES UNLESS OTHERWISE SPECIFIED:
0 PLC ±-
1 PLC ±0.5
2 PLC ±0.13
3 PLC ±0.013
4 PLC ±0.0001
ANGLES ±-
MATERIAL - -
FINISH - -

DWN Y.YIN 24OCT2012
CHK G.BAILEY 24OCT2012
APVD S.XI 24OCT2012
PRODUCT SPEC -
APPLICATION SPEC -
WEIGHT -

TE Connectivity
Harrisburg, PA 17105-3608

NAME Ocean End Feed Applicator -

SIZE	CAGE CODE	DRAWING NO	RESTRICTED TO
A1	00779	C-2150293	-

Customer Accessible Production Drawing | SCALE 1:1 | SHEET 1 OF 4 | REV A

DIMENSIONING AND TOLERANCING PER ASME Y14.5M-2009

SHEETS 3 & 4 ARE NOT REQUIRED FOR ATLANTIC VERSION

THIS DRAWING IS UNPUBLISHED. RELEASED FOR PUBLICATION 20
© COPYRIGHT 20 BY TYCO ELECTRONICS CORPORATION. ALL RIGHTS RESERVED.

LOC	DIST
A	66

REVISIONS

P	LTR	DESCRIPTION	DATE	DWN	APVD
	-	SEE SHEET 1	-	-	-

DIMENSIONING AND TOLERANCING PER ASME Y14.5M-2009

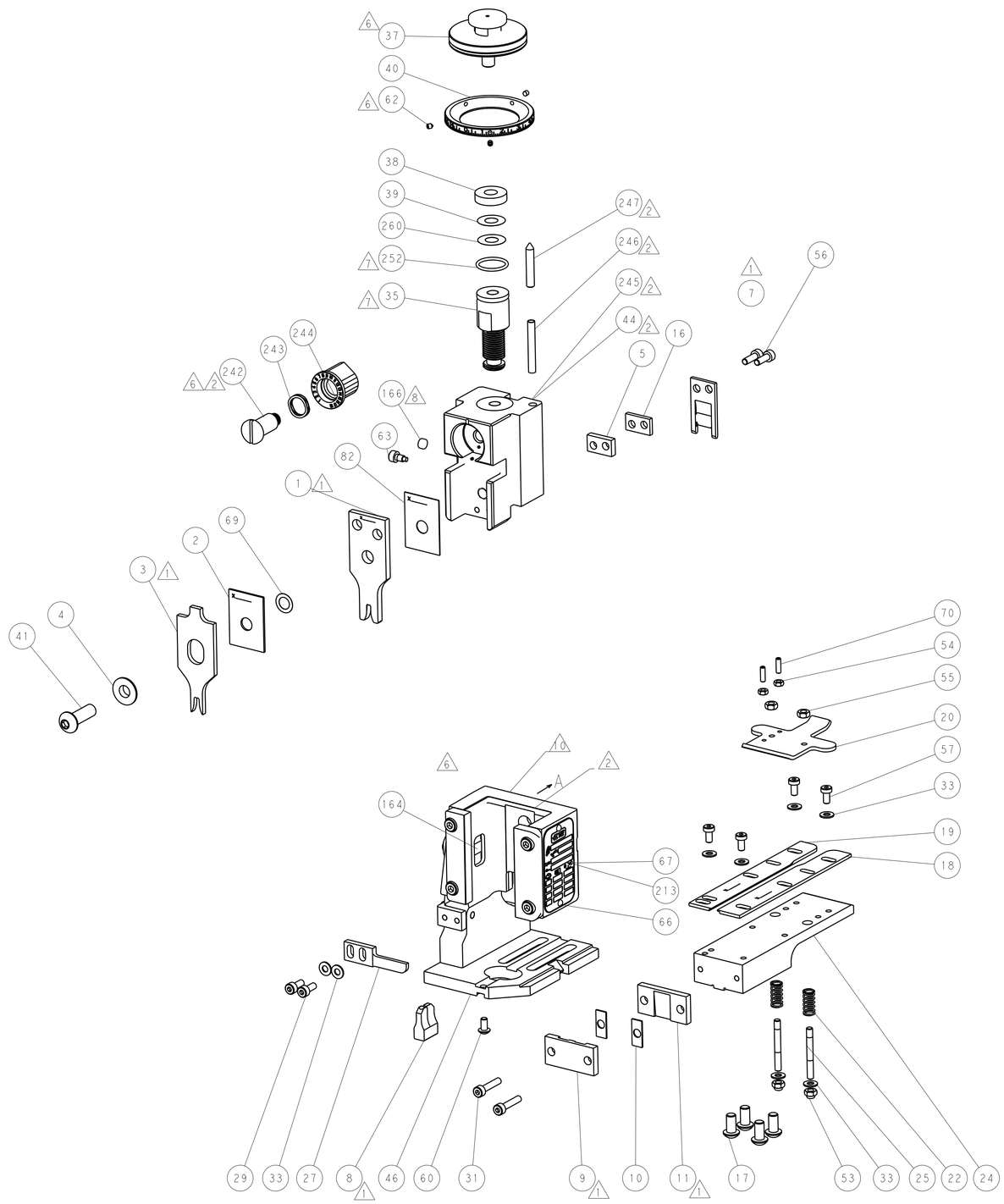

FEED TYPE

PNEUMATIC

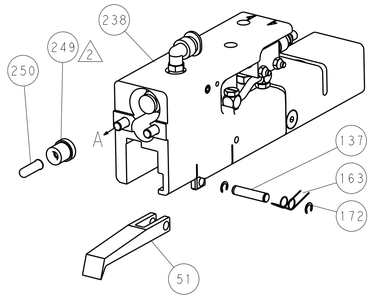

SERVO LATCH PLATE

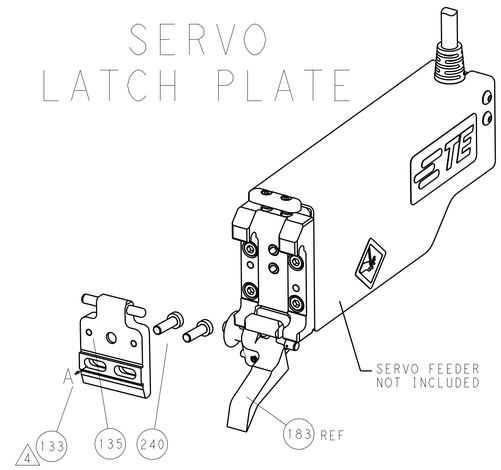

CAM POSITION

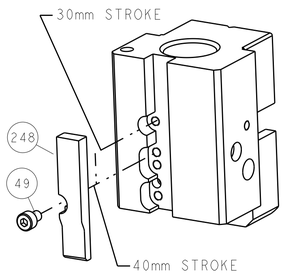

AIR FEED

ATLANTIC VERSION
Shown on sheets 1 of 4 & 2 of 4
(Pacific version shown on sheets 3 of 4 & 4 of 4)

THIS DRAWING IS A CONTROLLED DOCUMENT FOR TYCO ELECTRONICS CORPORATION. IT IS SUBJECT TO CHANGE AND THE CONTROLLING ENGINEERING ORGANIZATION SHOULD BE CONTACTED FOR THE LATEST REVISION.

DWN	Y.YIN	24OCT2012
CHK	G.BAILEY	24OCT2012
APVD	S.XI	24OCT2012

DIMENSIONS: mm

TOLERANCES UNLESS OTHERWISE SPECIFIED:
0 PLC ±-
1 PLC ±0.5
2 PLC ±0.13
3 PLC ±0.013
4 PLC ±0.0001
ANGLES ±-

MATERIAL - -
FINISH - -

PRODUCT SPEC -
APPLICATION SPEC -
WEIGHT -

TE Connectivity
Harrisburg, PA 17105-3608

NAME: Ocean End Feed Applicator -

SIZE	CAGE CODE	DRAWING NO	RESTRICTED TO
A1	00779	C-2150293	-

Customer Accessible Production Drawing

SCALE	SHEET	OF	REV
1:1	2	4	A

AMP 4805 REV 31MAR2000

SHEETS 3 & 4 ARE NOT REQUIRED FOR ATLANTIC VERSION

THIS DRAWING IS UNPUBLISHED. RELEASED FOR PUBLICATION 20
© COPYRIGHT 20 BY TYCO ELECTRONICS CORPORATION. ALL RIGHTS RESERVED.

SET UP GAUGE 2119599-2	LOC	DIST
	A	66

REVISIONS

P	LTR	DESCRIPTION	DATE	DWN	APVD
	-	SEE SHEET 1	-	-	-

PACIFIC VERSION TERMINATOR INTERFACE ADAPTER	PART NUMBER	REVISION	DESCRIPTION	FEED TYPE
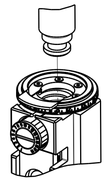	2-2150293-2	A	FINE CRIMP HEIGHT ADJUST	PNEUMATIC
	2-2150293-5	A	FINE CRIMP HEIGHT ADJUST	SERVO LATCH PLATE △4
	2-2150293-7	A	FINE CRIMP HEIGHT ADJUST	NONE
	7-2150293-7	A	CRIMP TOOLING KIT	-

APPLICATOR STYLE CONVERSION CHART

CONVERT TO	PART NUMBERS REQUIRED					
-	-	-	-	-	-	-
SERVO LATCH PLATE	2119951-1	1901697-1	8-2150293-5	-	-	2168400-7 (QUANTITY 2)
SMART APPLICATOR	2161326-1	-	8-2150293-4	-	-	-
-	-	-	-	-	-	-
PNEUMATIC FEED	2119950-1	2119792-1	-	2119641-2	-	2063440-2
-	-	-	-	-	-	-
-	-	-	-	-	-	-

APPLICATOR DATA		
CRIMP	SIZE	TYPE
WIRE	2.79 mm [.110]	F
INSUL	3.94 mm [.155]	F
APPLICATOR INSTRUCTIONS 408-10390		

TERMINAL DATA: TE TERMINAL		TE CRIMP SPECIFICATION	
TERMINAL NAME: RING			
WIRE STRIP LENGTH 5.59-6.35 mm [.220-.250 IN]		INSULATION DIAMETER RANGE ∅2.54-3.56 mm [.100-.140 IN]	
TERMINAL APPLICATION SPECIFICATION	114-2084	-	-
	-	-	-
TERMINALS APPLIED			
TE TERMINAL	TE TERMINAL	TE TERMINAL	TE TERMINAL
63518-1			

WIRE SIZE	CRIMP HEIGHT mm [INCH]	CRIMP HEIGHT REFERENCE SETTING △9
14 AWG	2.16+/-0.05 [.085+/-.002]	5.9
16 AWG	1.93+/-0.05 [.076+/-.002]	8.2
18 AWG	1.80+/-0.05 [.071+/-.002]	9.7

△1 RECOMMENDED SPARE PARTS

△2 GREASE BEARING SURFACES LIGHTLY

3. LUBRICATE DAILY PER THE APPLICATOR INSTRUCTION SHEET SUPPLIED WITH THE APPLICATOR.

△4 APPLICATOR SPECIFIC DATA TO BE ENTERED INTO BLANK MEMORY CHIP AT ASSEMBLY. SEE BELOW FOR PART NUMBER:
PNEUMATIC FEED WITH "SMART APPLICATOR" CONVERSION: 8-2150293-4
SERVO FEED WITH "FINE CRIMP HEIGHT ADJUST": 8-2150293-5

5. ADJUSTMENT OF THE STRIPPER MAY BE REQUIRED WHEN MOVING THE APPLICATOR BETWEEN BENCH AND LEADMAKER APPLICATIONS.

△6 APPLY PART NUMBER 1-23419-5 LOCTITE TO THREADS OF ITEMS 62 & 242.

△7 GREASE THREADS, GROOVE AND O-RING ON ITEMS 139 & 153.

△8 MAGNET, ITEM 166 MUST BE ORIENTED CORRECTLY IN ORDER TO PROPERLY ACTUATE THE COUNTER.

△9 CRIMP HEIGHT REFERENCE SETTING WAS THE SETTING USED WHEN THE APPLICATOR WAS QUALIFIED AT THE FACTORY. ADJUSTMENT MAY BE NECESSARY WHEN RUNNING APPLICATOR IN THE FIELD.

△10 TERMINAL PITCH NOT COMPATIBLE WITH MECHANICAL FEED.

*WARNING
ON INSTALLATION, SET WIRE DISC, ITEM 40 TO LARGEST WIRE SIZE SETTING. USE OF SETTINGS BELOW MINIMUM REQUIRED CRIMP HEIGHT SETTING WILL CAUSE DAMAGE TO CRIMP TOOLING.

	-77	-27	-25	-22	PART NO	DESCRIPTION	ITEM NO
	-	1	1	1	2119782-1	FINE ADJUST HEAD ASM, PACIFIC STYLE	251
	-	-	-	1	2119640-1	PUSH ROD, AIR FEED	250
	-	-	-	1	2079988-1	BUSHING, LCH5-12, MISUMI	249
	-	1	1	1	1-22279-3	SPRING, COMPRESSION	246
	-	1	1	1	2119082-9	CAM, SNAIL, INSULATION ADJUSTMENT	244
	-	1	1	1	2079764-1	WASHER, WAVE SPRING, CREST-TO-CREST	243
△6	-	1	1	1	2119083-1	RETAINER, INSULATION DIAL	242
	-	-	2	-	2168400-7	SHCS, LOW HEAD, RoHS, M5 X 10	240
	-	-	-	-	2119580-1	MECHANICAL FEED ASSEMBLY	239
	-	-	-	1	2063440-2	AIR FEED MODULE	238
	-	-	1	-	2119740-2	TAG,IDENTIFICATION	213
	-	4	4	4	2079383-9	SCR, BHSC, RoHS (M6 X 20)	186
	-	-	REF	-	1901697-1	FEED FINGER ASSEMBLY,EF	183
	-	-	-	2	21045-3	RING, RETAIN, EXTERN, 3/16 CRESCENT	172
	-	1	1	1	994969-1	MAGNET, RARE EARTH HIGH ENERGY	166
	-	REF	REF	REF	994970-2	COUNTER, MAGNETIC	164
	-	-	-	1	240638-1	SPRING, FEED FINGER	163
	-	1	1	1	8-21084-1	O-RING, .801 ID, .070 DIA. MAT.	153
	-	-	-	1	2119641-2	FEED CAM, AIR FEED	152
	-	1	1	1	2119798-2	DETENT PIN	145
	-	1	1	1	2079383-8	SCR, BHSC, RoHS (M4 X 16)	144
	-	1	1	1	2119655-6	APPLICATOR BASIC ASSEMBLY, EF	141
	-	1	1	1	2119651-1	RAM, ASIAN STYLE, END FEED	140
	-	1	1	1	2119092-2	BOLT, ADJUSTMENT	139
	-	-	-	1	3-23627-7	PIN, RETAIN, GRVD, 3/16 X .854	137
	-	-	REF	-	SEE NOTE 4	MEMORY CHIP, PROGRAMMED	135
	-	-	1	-	1633743-1	SERVO FEED LATCH ASM	133
	-	1	1	1	455888-4	SPACER, CRIMPER	82
	-	1	1	1	2119956-2	DOCUMENTATION PACKAGE	71
	-	2	2	2	2-18032-2	SCR, SET, FLT POINT M3 X 10.0	70
	-	1	1	1	2119943-1	WASHER, SPACER	69
	-	1	-	1	2119740-1	TAG,IDENTIFICATION	67
	-	2	2	2	2168078-1	SCREW, DRIVE, RH, RoHS	66
	-	1	1	1	2119793-1	LIMITER, ADJUSTMENT BOLT	63
△6	-	3	3	3	992763-5	SCR, SET, SOC, CONE POINT, M3 x 4.0	62
	-	-	-	-	2063961-1	FEED FINGER	58
	-	4	4	4	2168400-4	SHCS, LOW HEAD, RoHS, M4 X 8	57
	-	2	2	2	2168083-3	SCR, SKT HD CAP, RoHS, M4 X 12.0	56
	-	2	2	2	5018030-2	NUT, HEX, REG, RoHS, M4	55
	-	2	2	2	5018030-1	NUT, HEX, REG, RoHS, M3	54
	-	2	2	2	986965-8	NUT, LOCK, HEX, TORQUE (M4)	53
	-	-	-	1	2119792-1	PAWL, EF, AIR	51
	-	-	-	1	18023-9	SCR, SKT HD CAP M4 X 6.0	49
	-	1	1	1	2079383-7	SCR, BHSC, RoHS (M8 X 25)	41
	-	1	1	1	2119645-1	DISC, NUMBERED FA WIRE ADJUSTMENT	40
	-	1	1	1	2119957-1	APPLICATOR SHIM PACK	39
	-	1	1	1	2119644-2	RAM WASHER, PRECISION	38
	-	8	8	8	1-18028-2	WASHER, FLAT, REG M4	33
	-	2	2	2	2168083-9	SCR, SKT HD CAP, RoHS, M4 X 20	31
	-	2	2	2	1-2168083-0	SCR, SKT HD CAP, RoHS, M4 X 10	29
	-	1	1	1	240639-1	STRIPPER (MACHINING)	27
	-	2	2	2	1320906-1	STUD, THREADED	25
	-	1	1	1	1752371-5	PLATE, STRIP GUIDE	24
	-	2	2	2	2-22281-3	SPRING, COMPRESSION	22
	-	1	1	1	1752373-4	DRAG	20
	-	1	1	1	1901696-3	STRIP GUIDE, REAR	19
	-	1	1	1	1901695-3	STRIP GUIDE, FRONT	18
	-	1	1	1	240641-6	SPACER	16
△1	-	1	1	1	240644-1	PLATE, REAR SHEAR	11
	-	2	2	2	240645-1	SPACER, SHEAR PLATE	10
△1	-	1	1	1	690482-5	PLATE, FRONT SHEAR	9
△1	1	1	1	1	2-1803000-2	ANVIL, COMBINATION, END FEED	8
△1	-	1	1	1	2217206-7	BLADE, SLUG	7
	-	1	1	1	2-240641-0	SPACER	5
	-	1	1	1	238009-1	BLOCK, FL CRIMPER SPACER	4
△1	1	1	1	1	3-2119582-6	CRIMPER, INSULATION F PREMIUM	3
	-	1	1	1	1-455888-0	SPACER, CRIMPER	2
△1	1	1	1	1	1-456408-9	CRIMPER, WIRE PREMIUM	1

PACIFIC VERSION

Shown on sheets 3 of 4 & 4 of 4
(Atlantic version shown on sheets 1 of 4 & 2 of 4)

THIS DRAWING IS A CONTROLLED DOCUMENT FOR TYCO ELECTRONICS CORPORATION. IT IS SUBJECT TO CHANGE AND THE CONTROLLING ENGINEERING ORGANIZATION SHOULD BE CONTACTED FOR THE LATEST REVISION.

DWN Y.YIN	24OCT2012	TE Connectivity Harrisburg, PA 17105-3608
CHK G.BAILEY	24OCT2012	
APVD S.XI	24OCT2012	NAME Ocean End Feed Applicator -
PRODUCT SPEC -		
APPLICATION SPEC -		
WEIGHT -		SIZE A1 · CAGE CODE 00779 · DRAWING NO C-2150293 · RESTRICTED TO -
Customer Accessible Production Drawing		SCALE 1:1 · SHEET 3 OF 4 · REV A

DIMENSIONS: mm

TOLERANCES UNLESS OTHERWISE SPECIFIED:
0 PLC ±-
1 PLC ±0.5
2 PLC ±0.13
3 PLC ±0.013
4 PLC ±0.0001
ANGLES ±-

MATERIAL - -
FINISH - -

SHEETS 1 & 2 ARE NOT REQUIRED FOR PACIFIC VERSION

THIS DRAWING IS UNPUBLISHED. RELEASED FOR PUBLICATION 20
© COPYRIGHT 20 BY TYCO ELECTRONICS CORPORATION. ALL RIGHTS RESERVED.

LOC	DIST
A	66

REVISIONS

P	LTR	DESCRIPTION	DATE	DWN	APVD
	-	SEE SHEET 1	-	-	-

DIMENSIONING AND TOLERANCING PER ASME Y14.5M-2009

FEED TYPE

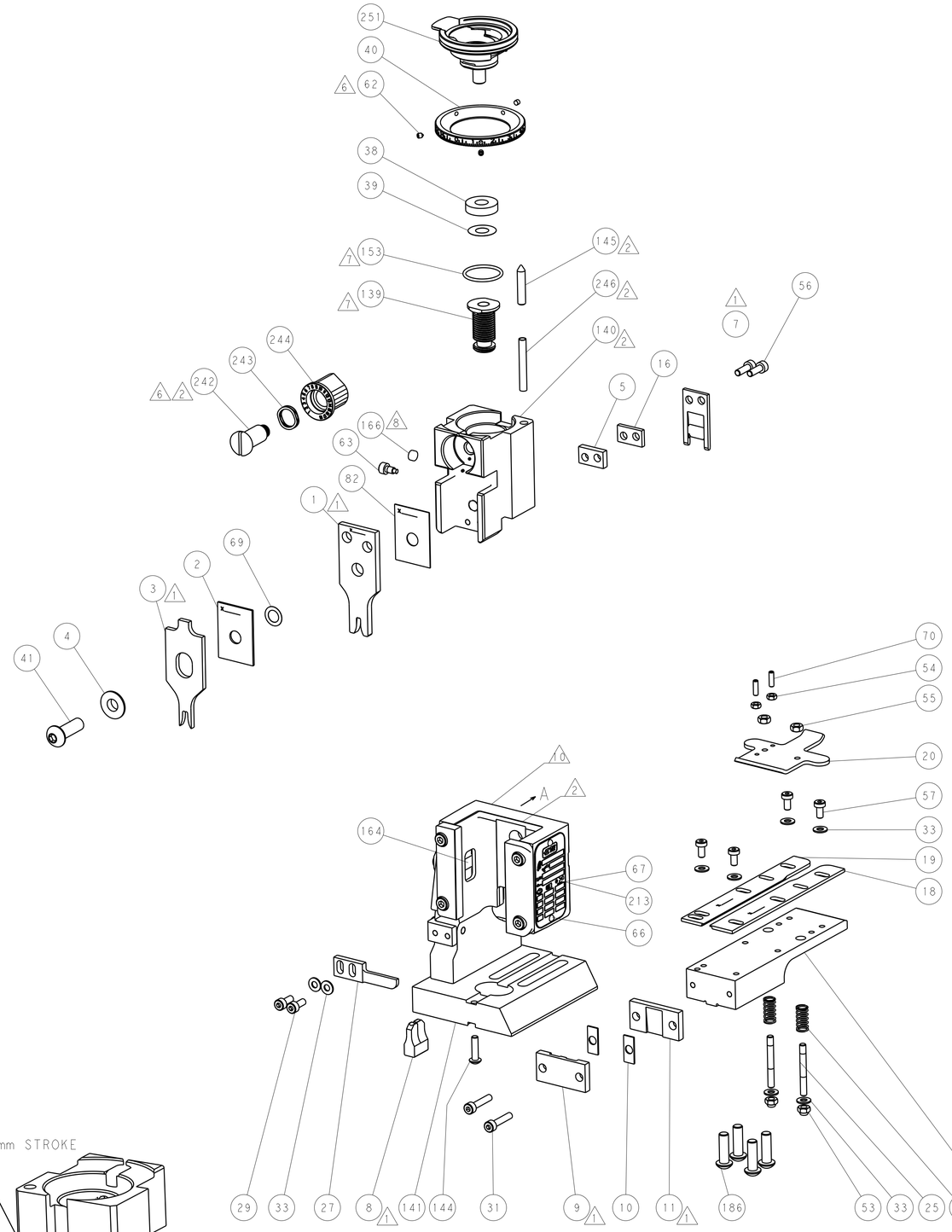

PNEUMATIC

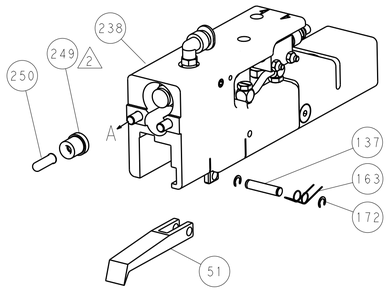

SERVO LATCH PLATE

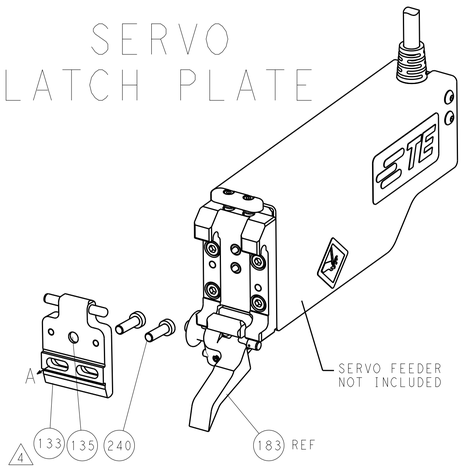

CAM POSITIONS

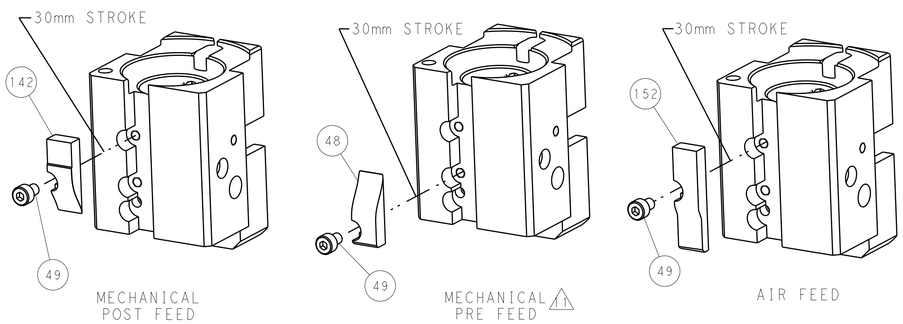

PACIFIC VERSION

Shown on sheets 3 of 4 & 4 of 4
(Atlantic version shown on sheets 1 of 4 & 2 of 4)

THIS DRAWING IS A CONTROLLED DOCUMENT FOR TYCO ELECTRONICS CORPORATION. IT IS SUBJECT TO CHANGE AND THE CONTROLLING ENGINEERING ORGANIZATION SHOULD BE CONTACTED FOR THE LATEST REVISION.

DWN	Y. YIN	24OCT2012
CHK	G. BAILEY	24OCT2012
APVD	S. XI	24OCT2012
PRODUCT SPEC	-	
APPLICATION SPEC	-	
WEIGHT	-	

DIMENSIONS: mm

TOLERANCES UNLESS OTHERWISE SPECIFIED:

0 PLC	± -
1 PLC	±0.5
2 PLC	±0.13
3 PLC	±0.013
4 PLC	±0.0001
ANGLES	± -

MATERIAL - -

FINISH - -

TE Connectivity
Harrisburg, PA 17105-3608

NAME: Ocean End Feed Applicator -

SIZE	CAGE CODE	DRAWING NO	RESTRICTED TO
A1	00779	C-2150293	-

Customer Accessible Production Drawing

SCALE 1:1 SHEET 4 OF 4 REV A

AMP 4805 REV 31MAR2000

SHEETS 1 & 2 ARE NOT REQUIRED FOR PACIFIC VERSION

Mouser Electronics

Authorized Distributor

Click to View Pricing, Inventory, Delivery & Lifecycle Information:

TE Connectivity:

2-2150293-2