THIS DRAWING IS UNPUBLISHED. RELEASED FOR PUBLICATION 20
© COPYRIGHT 20 BY - ALL RIGHTS RESERVED.

REVISIONS

P	LTR	DESCRIPTION	DATE	DWN	APVD
	A	INITIAL RELEASE	17OCT2016	N.P	X.X

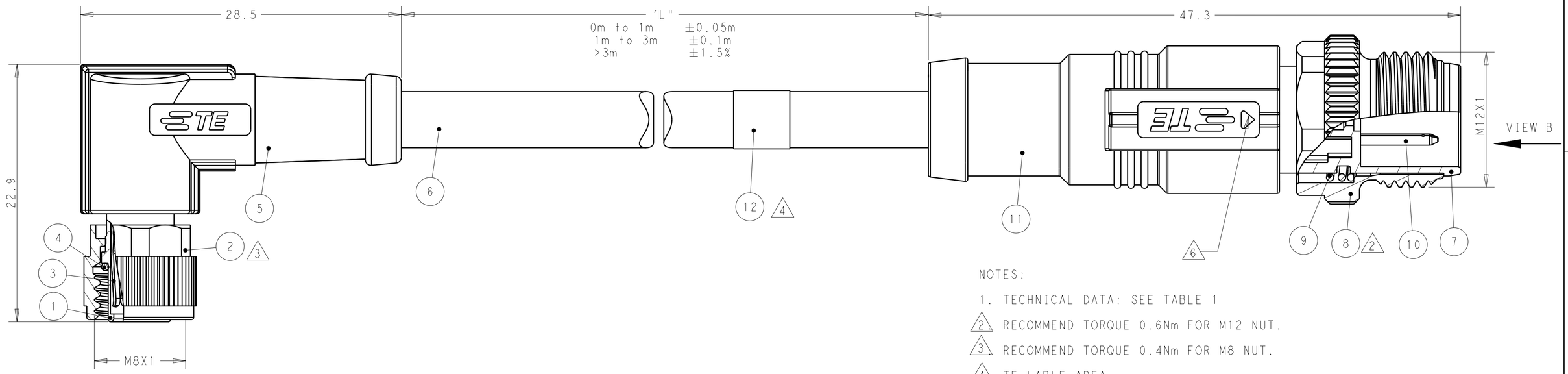

VIEW A

	T40524X5003-00X	T40524X5004-00X
VIEW A	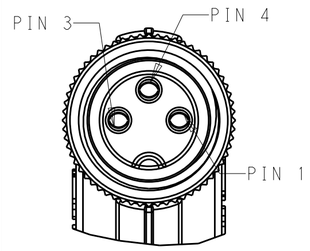	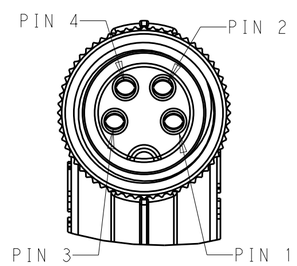
VIEW B	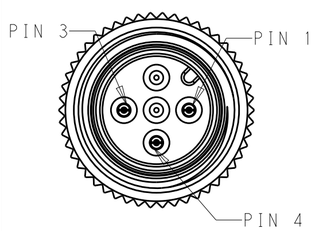	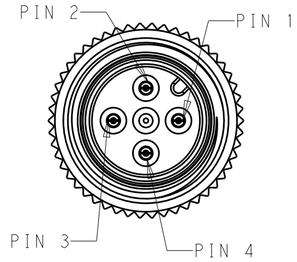

NOTES:

1. TECHNICAL DATA: SEE TABLE 1
2. RECOMMEND TORQUE 0.6Nm FOR M12 NUT.
3. RECOMMEND TORQUE 0.4Nm FOR M8 NUT.
4. TE LABLE AREA.
5. -**: CABLE LENGHT.-0.5:0.5m, -1.0:1.0m, -1.5:1.5m...
6. CODE POSITION INDICATOR;
7. ALL PRODUCT MUST COMPLIANCE WITH ROHS AND REACH.

注意事项

1. 技术参数：见表1
2. M12螺丝推荐扭矩0.6Nm;
3. M8螺丝推荐扭矩0.4Nm;
4. TE 标签位置;
5. -**线长:-0.5:0.5m,-1.0:1.0m,-1.5:1.5m
6. 产品CODE位置指示;
7. 产品必须符合ROHS与REACH.

	LABEL	12
TPU	OVER-MOLDING	11
COPPER ALLOY	CONTACT	10
SUS	SPRING	9
BRASS	NUT	8
PA66	HOUSING	7
	CABLE	6
TPU	OVERMOLDING	5
SILICON RUBBER	O-RING	4
BRASS	CONTACT	3
BRASS	NUT	2
PA66,	HOUSING	1

CABLE CHARACTERISTIC	LENGTH "L"	OPERATION TEMPERATURE	JACKET COLOR	JACKET MATERIAL	TYPE	POS.	PART NUMBER
WIRES: 0.25mm² (24AWG)	STANDARD: -001:0.5 M -002:1.0 M -003:1.5 M -004:3.0 M -005:5.0 M -006:7.0 M -007:10.0 M CUSTOMIZATION: -**0:**.0 M -**5:**.5 M	FIXED: -40°C~80°C FLXIBLE: -25°C~80°C	GRAY	PUR (UL)	RPC-M8-4FR-**-M12-4MS-PUR (6)	4	T4052425004-00X
					RPC-M8-3FR-**-M12-3MS-PUR (6)	3	T4052425003-00X
		FIXED: -10°C~80°C FLXIBLE: -5°C~80°C	BLACK	PVC (UL)	RPC-M8-4FR-**-M12-4MS-PVC (6)	4	T4052415004-00X
					RPC-M8-3FR-**-M12-3MS-PVC (6)	3	T4042315003-00X

TABLE 1

TECHNICAL DATA	T40524X5003-00X	T40524X5004-00X
RATED VOLTAGE	60V	30V
RATED CURRENT	3A	
DEGREE OF PROTECTION	IP67	

THIS DRAWING IS A CONTROLLED DOCUMENT.

DIMENSIONS: mm

TOLERANCES UNLESS OTHERWISE SPECIFIED:
0 PLC ±-
1 PLC ±0.50
2 PLC ±0.30
3 PLC ±
4 PLC ±
ANGLES ±-

MATERIAL: TBD material_2
FINISH: - finish_spec_2

DWN Nick Pan 23SEP2016
CHK Kobby Zhao 23SEP2016
APVD Xiang Xu 23SEP2016
PRODUCT SPEC 108-106140
APPLICATION SPEC -
WEIGHT -

TE Connectivity

NAME: M8 FEMALE RIGHT ANGLE TO M12 MALE STRAIGHT CABLE ASSEMBLY DOUBLE ENDED, UNSHIELDED

SIZE A2 | CAGE CODE - | DRAWING NO. C-T40524X500X00X | RESTRICTED TO -

CUSTOMER DRAWING | SCALE 3:1 | SHEET 1 OF 1 | REV A

1471-9 (3/13)

Mouser Electronics

Authorized Distributor

Click to View Pricing, Inventory, Delivery & Lifecycle Information:

TE Connectivity:
T4052415003-004