THIS DRAWING IS UNPUBLISHED. RELEASED FOR PUBLICATION -,- .
© COPYRIGHT - By - ALL RIGHTS RESERVED.

REVISIONS

P	LTR	DESCRIPTION	DATE	DWN	APVD
	K3	REVISED PER ECO-12-007718	08MAY12	KH	DR
	K4	REVISED PER ECO-17-007400	24NOV2017	RS	DR

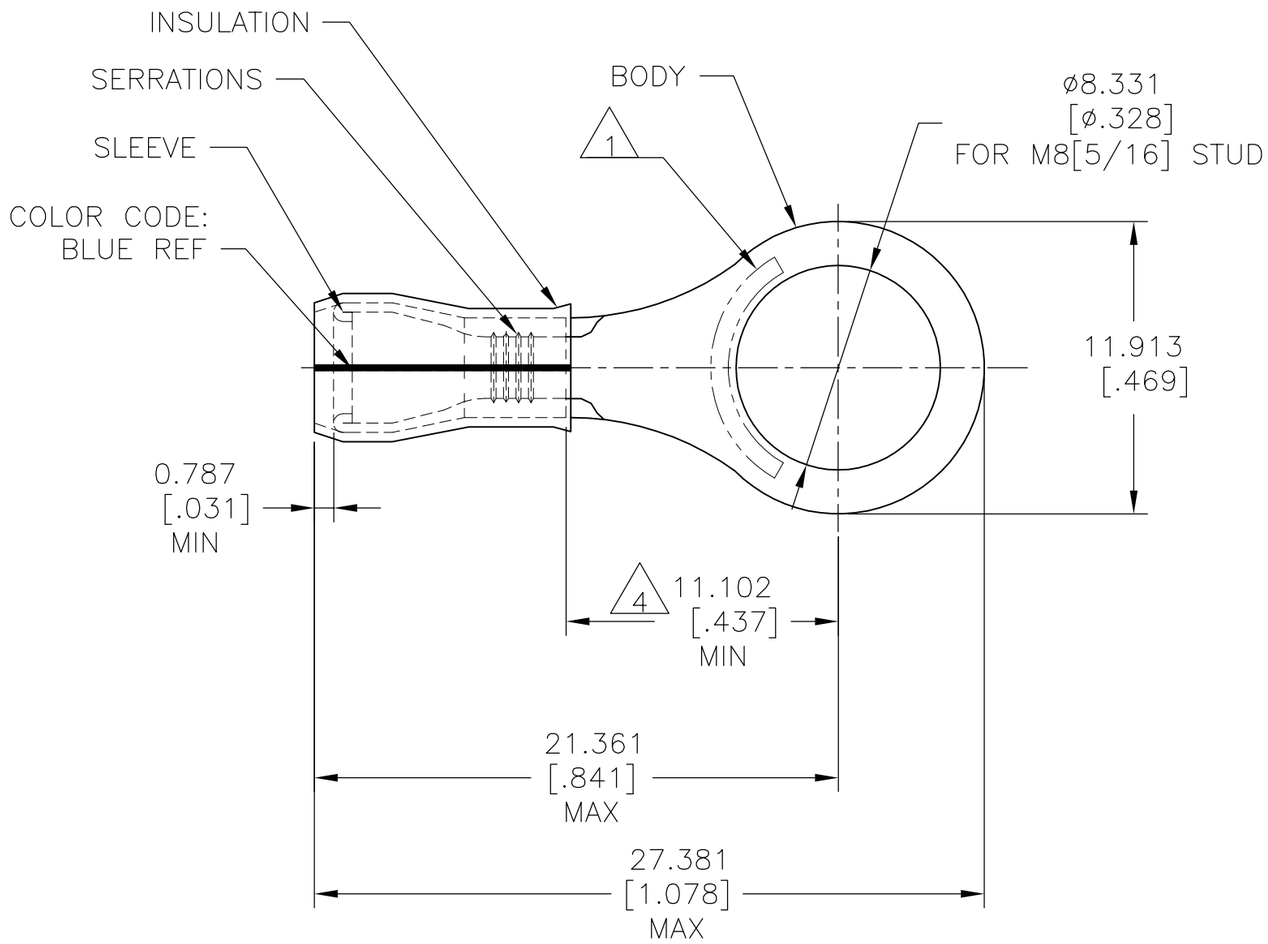

AMP
WIRE RANGE
16-14 AWG
STRANDED

1. STAMP AMP 16-14* APPROX AS SHOWN.
2. WIRE INSULATION : ø2.667-3.810[ø.105-.150]
3. BODY MATERIAL THK: 0.787±0.051[.031±.002]
4. APPLIES FROM EDGE OF METAL WIRE BARREL TO CENTER OF STUD HOLE.
5. MEETS M7928/4-109, CLASS 1 & 2
   MEETS M7928/13-109, CLASS 1 & 2.
6. MATERIAL:
   BODY & SLEEVE: COPPER PER ASTM B152
   INSULATION: PVF2.
7. FINISH:
   BODY & SLEEVE: TIN/LEAD (93-7) PLATE PER ASTM B545 (3% MIN LEAD CONTENT)
   INSULATION: COLOR-NATURAL.

QTY	PACKAGE TYPE	PART NO
1000	LOOSE PIECE	5 53420-1

AMP INCORPORATED
CUSTOMER SERVICE SYSTEMS

FOR ADDITIONAL PRODUCT INFORMATION OR COPIES OF DRAWINGS AND TECHNICAL DOCUMENTS	PRODUCT INFORMATION CENTER 1-800-522-6752
FOR APPLICATION TOOLING INFORMATION	TOOLING ASSISTANCE CENTER 1-800-722-1111
FOR ORDER ENTRY	1-800-526-5142

THIS DRAWING IS A CONTROLLED DOCUMENT FOR AMP INCORPORATED. IT IS SUBJECT TO CHANGE AND THE CONTROLLING ENGINEERING ORGANIZATION SHOULD BE CONTACTED FOR THE LATEST REVISION.

MAX RECOMMENDED OPERATING TEMPERATURE: 150°C [302°F] MAX
VOLTAGE RATING: N/A
CIRCULAR MIL AREA: 1.04-2.62mm² [2,050-5,180] STRANDED

THIS DRAWING IS A CONTROLLED DOCUMENT.

DIMENSIONS: mm [INCHES]

TOLERANCES UNLESS OTHERWISE SPECIFIED:
0 PLC ± -
1 PLC ± -
2 PLC ± -
3 PLC ± 0.127[.005]
4 PLC ± -
ANGLES ± -

MATERIAL 6
FINISH 7

DWN JR RUTH	25OCT07	
CHK T MICHIELUTTI	25OCT07	
APVD T MICHIELUTTI	25OCT07	
PRODUCT SPEC —		
APPLICATION SPEC 114-2157		
WEIGHT —		

TE Connectivity

NAME: TERMINAL, RING TONGUE, PVF2 , P.I.D.G. WIRE SIZE: 16-14 AWG

SIZE	CAGE CODE	DRAWING NO	RESTRICTED TO
A3	00779	C-53420	—

CUSTOMER DRAWING | SCALE 4:1 | SHEET 1 OF 1 | REV K4

1470-19 (1/15)

Mouser Electronics

Authorized Distributor

Click to View Pricing, Inventory, Delivery & Lifecycle Information:

TE Connectivity:
53420-1