THIS DRAWING IS UNPUBLISHED. RELEASED FOR PUBLICATION -
© COPYRIGHT - BY - ALL RIGHTS RESERVED.

REVISIONS

| P | LTR | DESCRIPTION | DATE | DWN | APVD |
|---|---|---|---|---|---|
| | A | RELEASED | 6-2-17 | CT | DH |

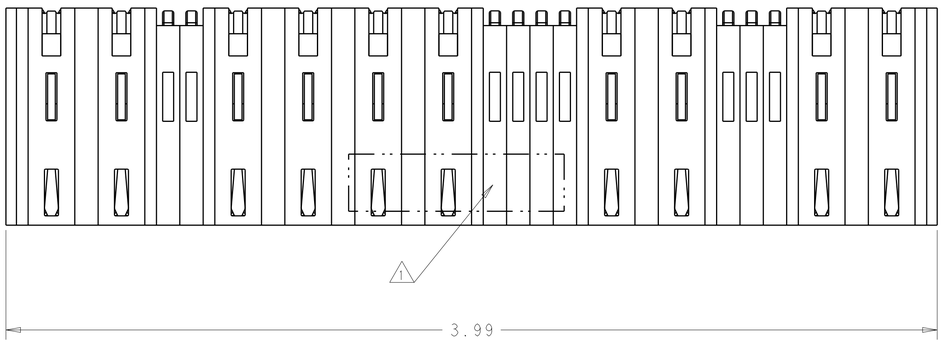


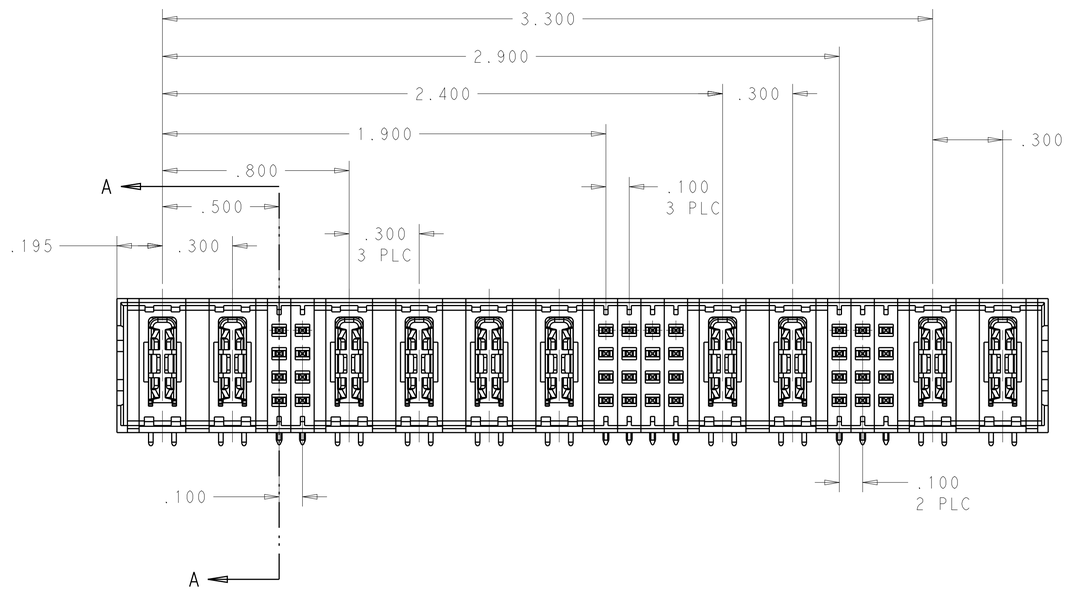


1. "TE", PART NUMBER, AND DATE CODE TO BE MARKED IN AREA SHOWN. PARTS UNDER 2.00 LONG MAY BE MARKED ON BOTH SIDES.
2. MATERIAL: HOUSING - GLASS FILLED HIGH TEMP THERMO PLASTIC,BLACK, UL94 V-0
   POWER CONTACT - HIGH CONDUCTIVITY COPPER ALLOY
   SIGNAL CONTACT - HIGH CONDUCTIVITY COPPER ALLOY
3. CONTACT PLATING: SIGNAL CONTACTS - .000050 MIN Ni UNDER ALL
   .000050 MIN Au ON CONTACT AREA
   .000005 MIN Au AT PCB INTERFACE
   POWER CONTACTS - .000050 MIN Ni UNDER ALL
   .000050 MIN Au ON CONTACT AREA
   .000005 MIN Au AT PCB INTERFACE
4. MECHANICAL CONNECTOR KEEP OUT ZONE.
5. DATUM AND BASIC DIMENSIONS ESTABLISHED BY CUSTOMER.
6. PCB - HOLE DIAMETERS ARE FINISHED HOLE SIZE.
7. PCB - .0453±.0010 DRILLED HOLES PLATED WITH .0003 MIN Sn OVER .001 TO .003 Cu PLATING TO ACHIEVE A .040 DIA HOLE.

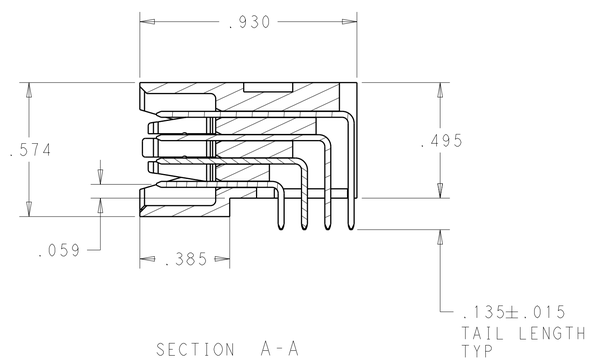


SECTION A-A

| 2ACP+8S+4ACP+16S+2ACP+12S+2ACP | 2314580-1 |
|---|---|
| DESCRIPTION | PART NUMBER |

THIS DRAWING IS A CONTROLLED DOCUMENT.

DIMENSIONS: INCHES

TOLERANCES UNLESS OTHERWISE SPECIFIED:
0 PLC ±-
1 PLC ±-
2 PLC ±.01
3 PLC ±.005
4 PLC ±.0020
ANGLES ±2

MATERIAL -
FINISH -

DWN C.C.THOMAS 1-10-17
CHK D.HOANG 1-10-17
APVD D.HOANG 1-10-17
PRODUCT SPEC 108-2292
APPLICATION SPEC 114-13251
WEIGHT -

TE Connectivity

NAME RIGHT ANGLE HEADER ASSEMBLY WITH GUIDELESS MULTI-BEAM XLE

SIZE A1 | CAGE CODE 00779 | DRAWING NO C-2314580 | RESTRICTED TO -

CUSTOMER DRAWING | SCALE 1:4 | SHEET 1 OF 2 | REV A

4805 (3/13)

THIS DRAWING IS UNPUBLISHED. RELEASED FOR PUBLICATION -
© COPYRIGHT - BY - ALL RIGHTS RESERVED.

REVISIONS

| P | LTR | DESCRIPTION | DATE | DWN | APVD |
|---|---|---|---|---|---|
| | - | SEE SHEET 1 | - | - | - |

| PART NUMBER | ROWS | | POWER | | SIGNAL | | POWER | | | | SIGNAL | | | | POWER | | SIGNAL | | | POWER | | |
|---|---|---|---|---|---|---|---|---|---|---|---|---|---|---|---|---|---|---|---|---|---|---|
| | | | P1 | P2 | 1 | 2 | P3 | P4 | P5 | P6 | 3 | 4 | 5 | 6 | P7 | P8 | 7 | 8 | 9 | P9 | P10 | |
| 2314580-1 | D C B A | | TM | TM | J K N S | J K N S | TM | TM | TM | TM | J K N S | J K N S | J K N S | J K N S | TM | TM | J K N S | J K N S | J K N S | TM | TM | |
| 2ACP+8S+4ACP+16S+2ACP+12S+2ACP | | | | | | | | | | | | | | | | | | | | | | |

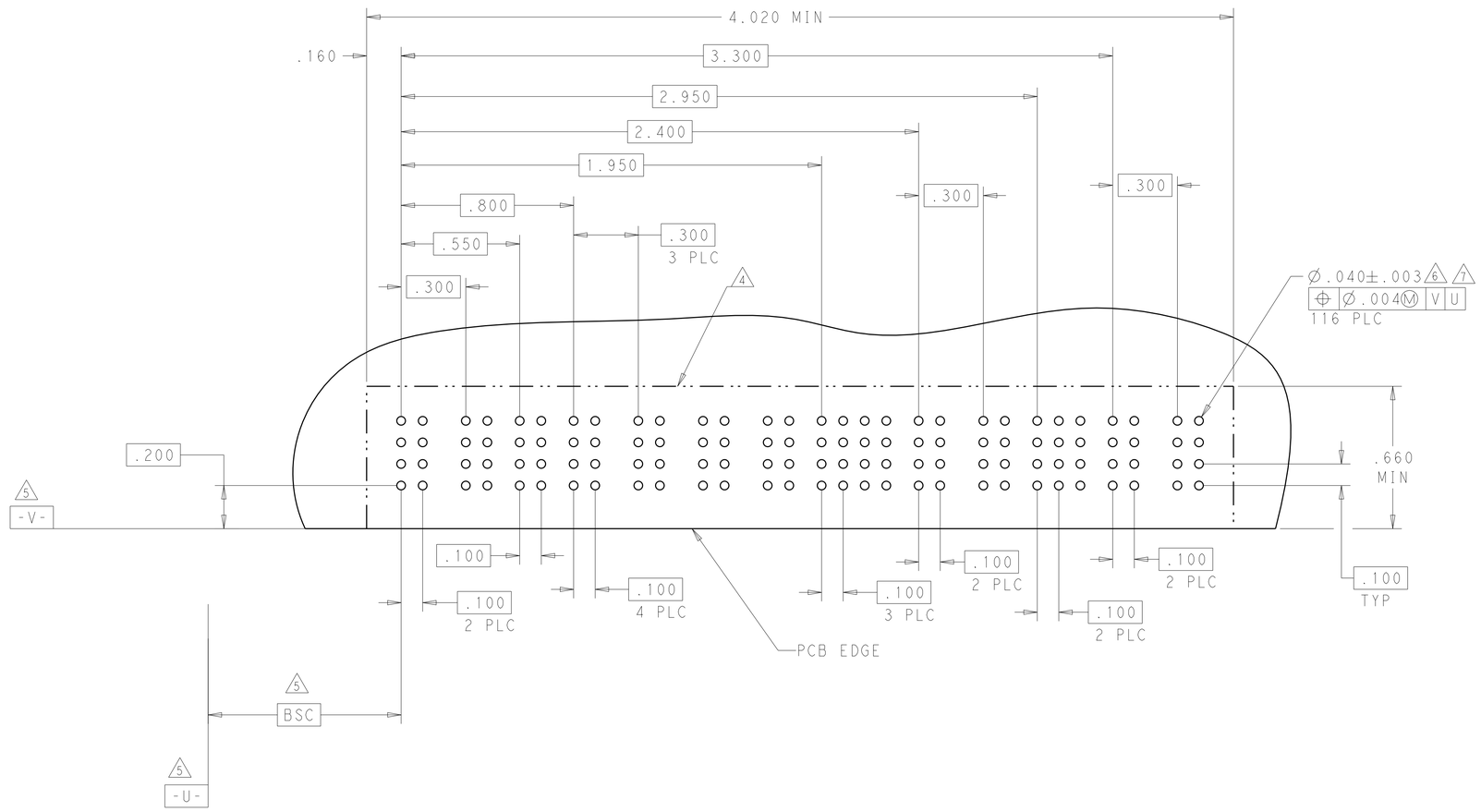


THIS DRAWING IS A CONTROLLED DOCUMENT.

DIMENSIONS: INCHES

TOLERANCES UNLESS OTHERWISE SPECIFIED:
0 PLC ±-
1 PLC ±-
2 PLC ±-
3 PLC ±.005
4 PLC ±.0020
ANGLES ±2

MATERIAL - -
FINISH - -

DWN C.C.THOMAS 1-10-17
CHK D.HOANG 1-10-17
APVD D.HOANG 1-10-17
PRODUCT SPEC 108-2292
APPLICATION SPEC 114-13251
WEIGHT -

CUSTOMER DRAWING

TE Connectivity

NAME RIGHT ANGLE HEADER ASSEMBLY WITH GUIDELESS MULTI-BEAM XLE

| SIZE | CAGE CODE | DRAWING NO | RESTRICTED TO |
|---|---|---|---|
| A1 | 00779 | C-2314580 | - |

SCALE 1:4 SHEET 2 OF 2 REV A

4805 (3/13)

# Mouser Electronics

Authorized Distributor

Click to View Pricing, Inventory, Delivery & Lifecycle Information:

TE Connectivity:

2314580-1