35MM ILLUMINATED CAPACITIVE SWITCH (MOMENTARY)

3323-58

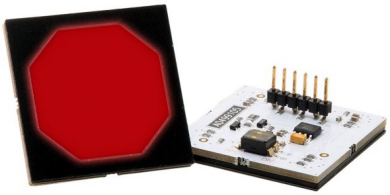

Features:

- High brightness, full RGB illumination of touch area.
- Momentary, solid state switch output.
- Cable assembly available separately.
- Self adhesive, suitable for panel thickness up to 11mm.
- Adjustable touch sensitivity.

Description:

These illuminated, capacitive touch switches are a revolutionary design eliminating the need for panel cut-outs and the worry of ingress protection. When using these switches all you need to factor in when designing the panel lay out, is the position of the switches and the size of switches you require. Any glass, clear acrylic, plastic or similar panel sheet can be printed with your required design and these units simply stick to the back. The switch works through the panel giving full RGB illumination with an unmatched uniformity of illumination.

Specification	
Part Code	3323-58
Supply Voltage	6VDC to 24VDC
Outputs	Switch output 40mA (momentary) Red LED 80mA max Green LED 80mA max Blue LED 80mA max
Operating Temperature	0°C to 50°C
Storage Temperature	0°C to 70°C
Illuminations *	Red, 465 cd/m² Green, 1050 cd/m² Blue, 255 cd/m² * Typical Values

Mechanical Data:

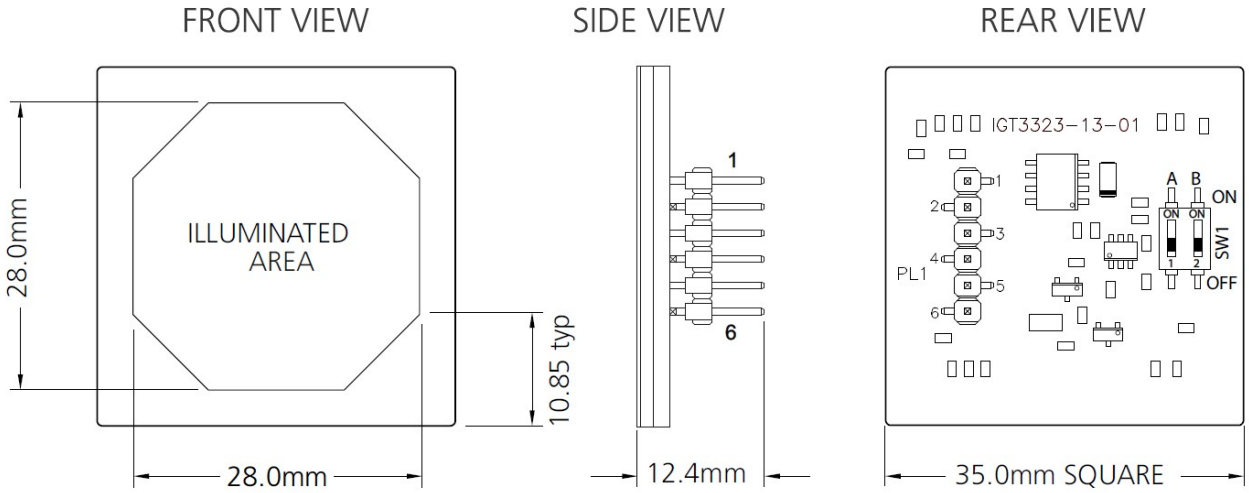

General Note
TT Electronics reserves the right to make changes in product specification without notice or liability. All information is subject to TT Electronics' own data and is considered accurate at time of going to print.

TT Electronics | Stadium IGT Ltd
Woodside Road Industrial Estate, Woodside Road, Eastleigh, SO50 4ET, UK
t: +44 (0) 23 8061 1818

© TT Electronics plc

Diagrams

Electrical Outputs:

PL1	Function	Notes
Pin 1	Supply +ve	+6VDC to +24VDC
Pin 2	Supply GND	GND
Pin 3	Switched Output	Up to 40mA max source. Voltage as supply voltage
Pin 4	Green LED Output	80mA max
Pin 5	Red LED Output	80mA max
Pin 6	Blue LED Output	80mA max

Sensitivity Table:

SW1-A	SW1-B	SENSITIVITY
OFF	OFF	LOW
ON	OFF	LOW/MED
OFF	ON	MED/HIGH
ON	ON	HIGH

Materials Sensitivity Guide:

GLASS	ACRYLIC
5mm	2mm
7mm	4mm
9mm	6mm
11mm	8mm

FRONT VIEW

SIDE VIEW

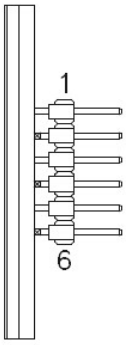

REAR VIEW

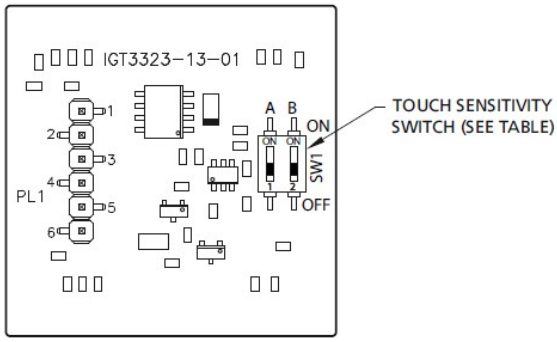

General Note
TT Electronics reserves the right to make changes in product specification without notice or liability. All information is subject to TT Electronics' own data and is considered accurate at time of going to print.

TT Electronics | Stadium IGT Ltd
Woodside Road Industrial Estate, Woodside Road, Eastleigh, SO50 4ET, UK
t: +44 (0) 23 8061 1818

© TT Electronics plc

Circuit Diagram

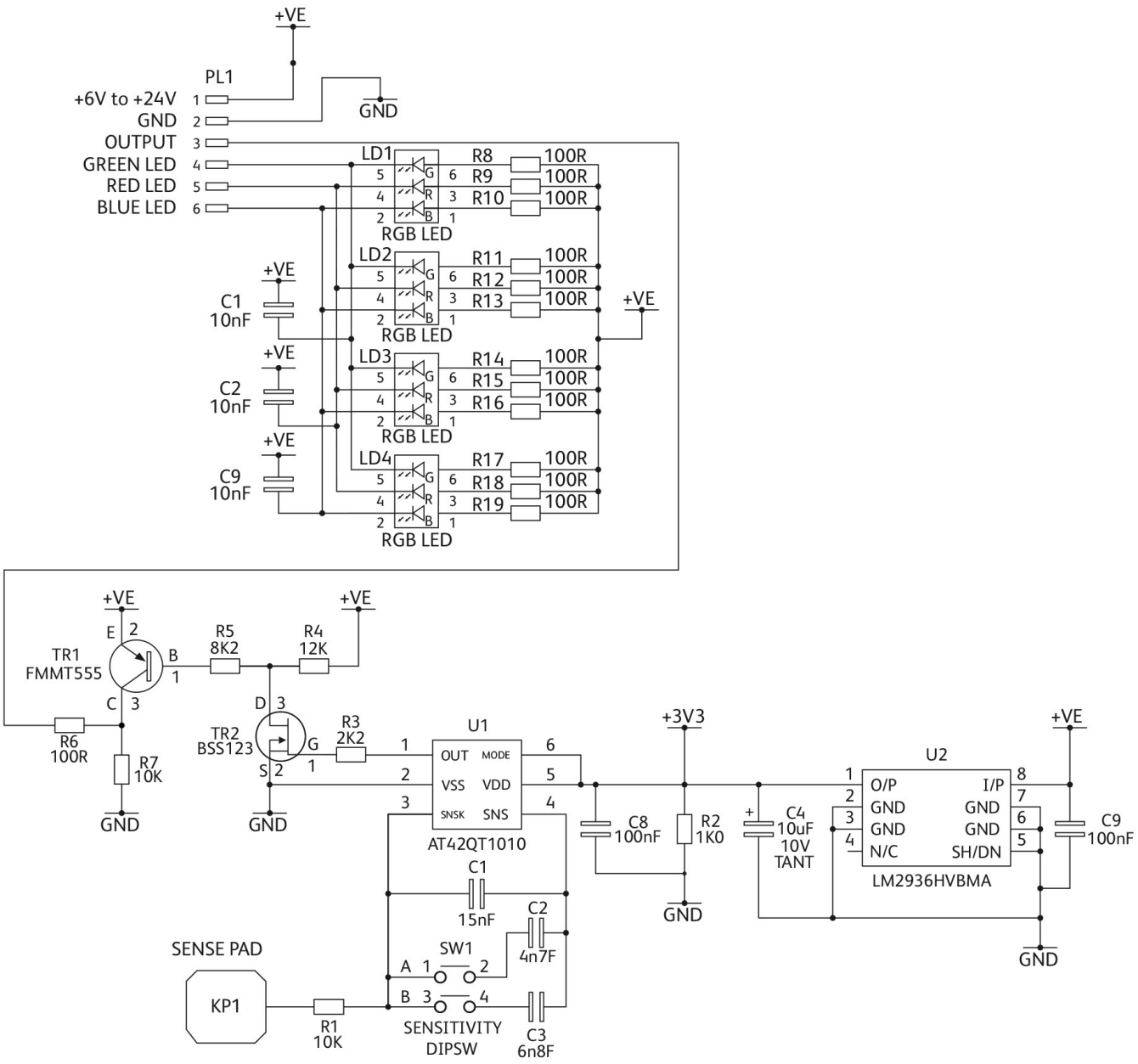

© TT Electronics plc

Mouser Electronics

Authorized Distributor

Click to View Pricing, Inventory, Delivery & Lifecycle Information:

TT Electronics:

3323-58