TQP7M9104

2W High-Linearity Amplifier

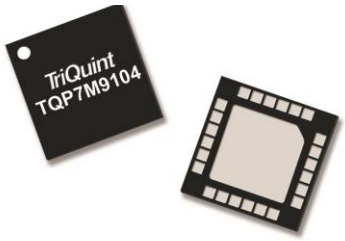

24 Pin 4 mm x 4 mm leadless SMT Package

General Description

The TQP7M9104 is a high linearity driver amplifier in industry standard, RoHS compliant, QFN surface mount package. This InGaP / GaAs HBT delivers high performance across 600 – 2700 MHz range of frequencies with 15.8 dB Gain, +49.5 dBm OIP3 and +32.5 dBm P1dB at 2.14 GHz while only consuming 435 mA quiescent collector current. All devices are 100% RF and DC tested.

The TQP7M9104 incorporates on-chip features that differentiate it from other products in the market. The amplifier integrates an on-chip DC over-voltage and RF over-drive protection. This protects the amplifier from electrical DC voltage surges and high input RF input power levels that may occur in a system.

The TQP7M9104 is targeted for use as a driver amplifier in wireless infrastructure where high linearity, medium power, and high efficiency are required. The device is an excellent candidate for transceiver line cards and high-power amplifiers in current and next generation multi-carrier 3G / 4G base stations.

Functional Block Diagram

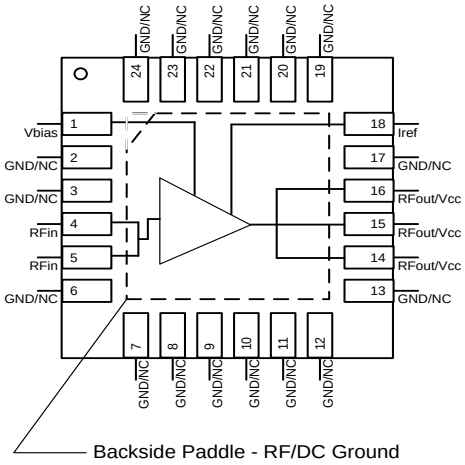

Product Features

- 600 – 2700 MHz
- +32.8 dBm P1dB
- +49.5 dBm Output IP3
- 15.8 dB Gain At 2140 MHz
- +5 V Single Supply, 435 mA Collector Current
- Internal RF Overdrive Protection
- Internal DC Overvoltage Protection
- Internal Active Bias
- On Chip ESD Protection
- Shut-down Capability
- Capable Of Handling 10:1 VSWR At +5 V_{CC},
- 2.14 GHz, +32.8 dBm CW P_{OUT} Or +23.5 dBm
- WCDMA P_{OUT}

Applications

- Repeaters
- BTS Transceivers
- BTS High Power Amplifiers
- CDMA / WCDMA / LTE
- General Purpose Wireless

Ordering Information

Part No.	Description
TQP7M9104	2 Watt High Linearity Amplifier
TQP7M9104-PCB900	920 – 960 MHz EVB
TQP7M9104-PCB2140	2.11 – 2.17 GHz EVB

Standard T / R size = 2500 pieces on a 13” reel.

Absolute Maximum Ratings

Parameter	Rating
Storage Temperature	-65 to +150°C
Maximum Input Power, CW	+30 dBm
Device Voltage, V_{CC}	+6.5 V

Exceeding any one or a combination of the Absolute Maximum Rating conditions may cause permanent damage to the device. Extended application of Absolute Maximum Rating conditions to the device may reduce device reliability.

Recommended Operating Conditions

Parameter	Min	Typ	Max	Units
Supply Voltage (V_{CC})		+5	+5.25	V
T_{CASE}	-40		+85	°C
Tj (for >10^6 hours MTTF)			170	°C

Electrical specifications are measured at specified test conditions. Specifications are not guaranteed over all recommended operating conditions. Operating the part above the maximum recommended Tcase may degrade performance.

Electrical Specifications

Test conditions unless otherwise noted: V_{CC}=+5 V, I_{CQ} = 435 mA, Temp= +25°C, Using a TQP7M9104 Application circuit.

Parameter	Conditions	Min	Typ	Max	Units
Operational Bandwidth		600		2700	MHz
Test Frequency			2140		MHz
Power Gain		14.3	15.8	17.3	dB
Input Return Loss			12.0		dB
Output Return Loss			9.5		dB
Output IP3	Pout=+17 dBm / tone, Δf=1 MHz	+45.5	+49.5		dBm
WCDMA Channel Power (1)	At −50 dBc ACLR		+23.8		dBm
Output P1dB		+32	+32.8		dBm
Noise Figure			4.4		dB
Quiescent Collector Current, Icq		355	435	490	mA
V_{CC}			+5.0		V
I_{REF}			19.0		mA
Thermal Resistance (jnc to case) θ_{jc}			15.7		°C/W

Notes:

1. ACLR Test set-up: 3GPP WCDMA, TM1+64 DPCH, +5 MHz offset, PAR = 9.7 dB at 0.01% Prob.

Device Characterization Data

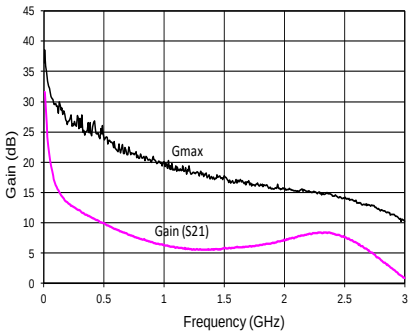

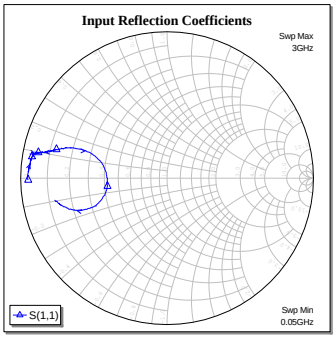

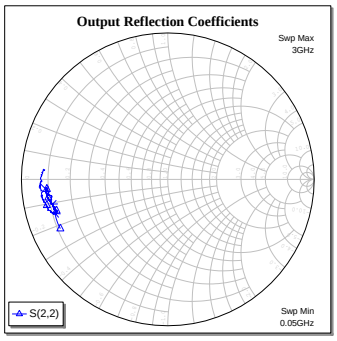

S-Parameters

Test Conditions: V_{CC} = +5 V, I_{CQ} = 435 mA, I_{REF} = 19 mA, T=+25 °C, unmatched 50 ohm system, calibrated to device leads

Freq (GHz)	S11 (dB)	S11 (ang)	S21 (dB)	S21 (ang)	S12 (dB)	S12 (ang)	S22 (dB)	S22 (ang)
50	−0.4553	−179.26	20.126	118.98	−43.273	4.1446	−1.8524	−155.37
100	−0.4348	178.69	15.971	124.23	−42.615	−1.4433	−1.8878	−166.21
200	−0.4583	176.36	13.24	126.46	−40.235	2.3772	−1.859	−172.01
400	−0.5124	173.38	10.778	118.38	−40.956	0.7196	−1.5792	−174.84
600	−0.5796	171.48	8.9263	108.51	−41.682	10.901	−1.6005	−175.51
800	−0.6594	170.04	7.3201	100.05	−42.533	−8.3414	−1.6164	−174.73
1000	−0.7617	169.21	6.2878	93.94	−42.841	6.4435	−1.531	−173.74
1200	−0.8777	168.95	5.7693	89.116	−40.461	3.1558	−1.6296	−171.43
1400	−1.1121	168.56	5.5556	83.209	−39.435	−0.2787	−1.7656	−170.12
1600	−1.4274	167.84	6.0222	74.67	−41.097	−1.3568	−1.8812	−167.74
1800	−1.9525	165.88	6.3509	63.971	−37.935	−22.971	−1.951	−165.22
2000	−3.0149	163.02	7.1412	51.862	−36.666	−37.917	−1.9853	−163.19
2200	−5.3234	162.27	8.1891	30.583	−35.423	−57.21	−1.7616	−163.18
2400	−7.8162	−179.65	8.2216	2.8455	−35.631	−78.615	−1.5099	−167.05
2600	−5.6951	−159.12	6.6099	−26.943	−35.017	−113.27	−1.2811	−172.58
2800	−3.2673	−161.75	3.8288	−51.412	−37.551	−151.24	−1.2268	−179.96
3000	−2.1416	−169.16	0.9043	−67.725	−39.417	−168.38	−1.4503	175.32

Reference Design: TQP7M9104 (615 – 655 MHz)

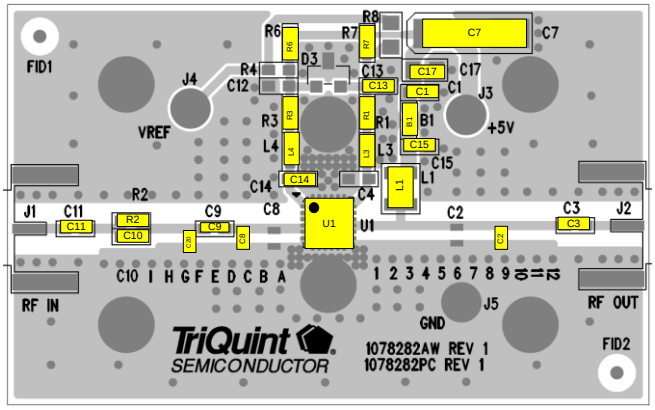

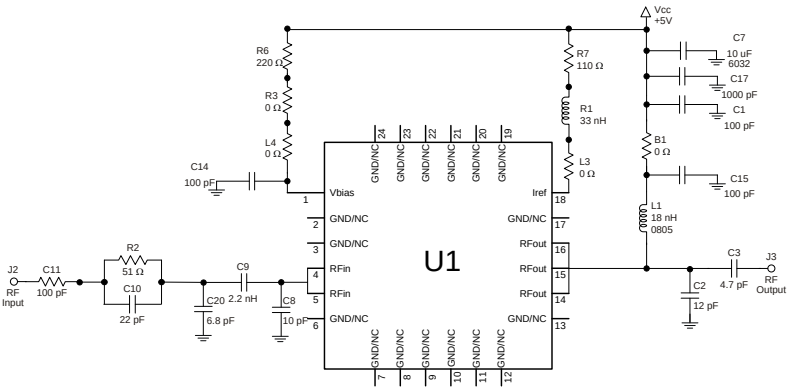

Notes:

1. Components shown on the silkscreen but not on the schematic are not used.
2. 0 Ω resistors may be replaced with copper trace in the target application layout.
3. Iref can be used as device power down current by placing R7 at location R8.
4. The recommended component values are dependent upon the frequency of operation.
5. All components are of 0603 size unless stated on the schematic.
6. R1 is critical for device linearity performance.
7. Critical component placement locations:
   - Distance between right edge of C8 and U1 device package is 193 mil
   - Distance between right edge of C20 and U1 device package is 336 mil
   - Distance between left edge of C2 and U1 device package is 453 mil
   - Distance between center of C9 and U1 device package is 275 mil

Typical Performance: TQP7M9104 (615 – 655 MHz)

Test conditions unless otherwise noted: V_{CC} = +5 V, I_{CQ} = 435 mA, I_{REF} = 19 mA, T=+25 °C

Parameter	Typical Value			Units
Frequency	615	635	655	MHz
Gain	20.8	21	21.1	dB
Input Return Loss	9.4	9	8.5	dB
Output Return Loss	7.0	7.7	9.2	dB
Output P1dB	+34.0	+34.3	+34.6	dBm
Output IP3 (+23 dBm / tone, Δf = 1 MHz)	+43.6	+43.5	+43.5	dBm
Channel Power (At −50 dBc ACLR with 20MHz LTE)	+19.0	+18.0	+18.0	dBm

Performance Plots: TQP7M9104 (615 – 655 MHz)

Test conditions unless otherwise noted: V_{CC}=+5 V, Temp=+25°C

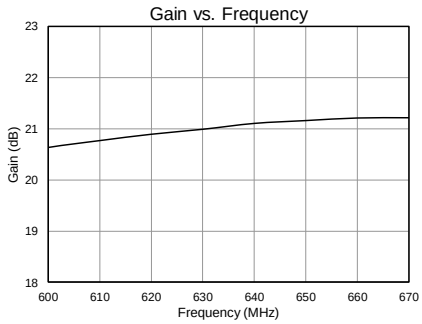

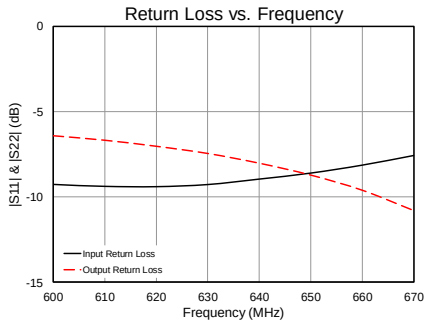

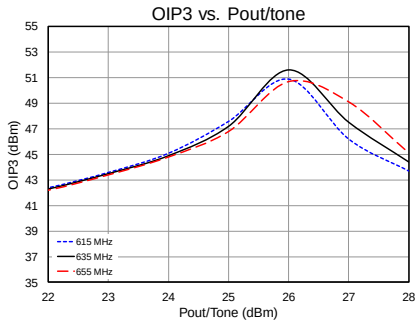

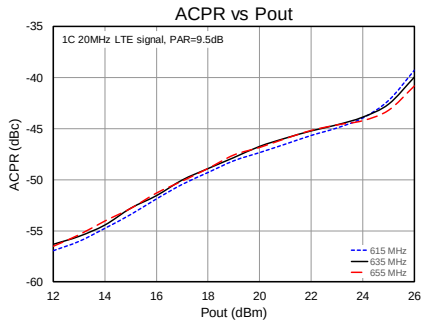

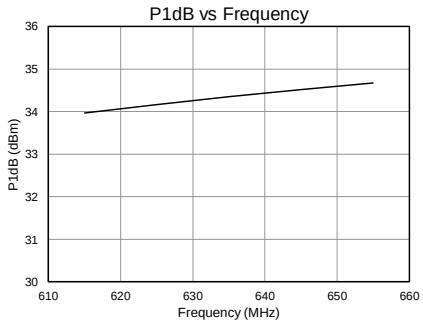

Reference Design: TQP7M9104 (869 – 894 MHz)

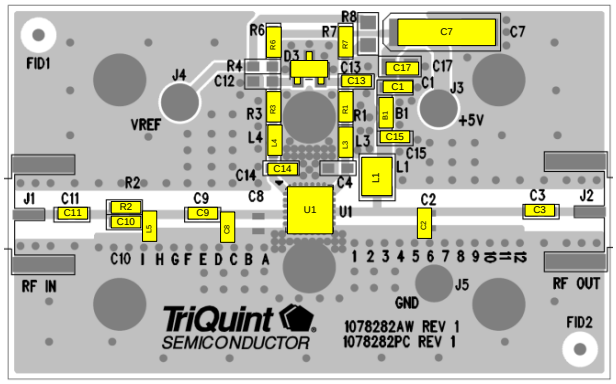

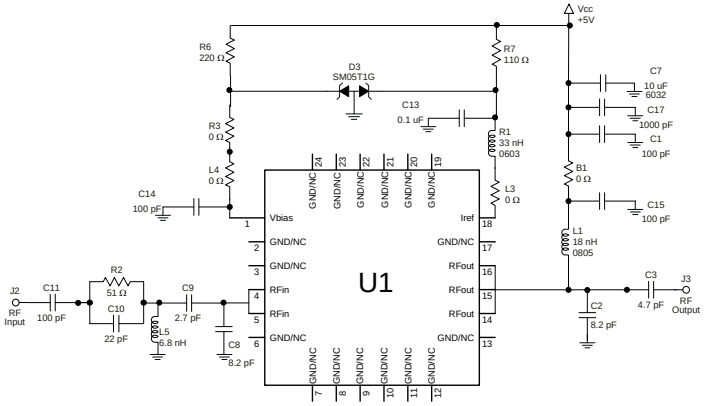

Notes:

1. Components shown on the silkscreen but not on the schematic are not used.
2. 0 Ω resistors may be replaced with copper trace in the target application layout.
3. Iref can be used as device power down current by placing R7 at location R8.
4. The recommended component values are dependent upon the frequency of operation.
5. All components are of 0603 size unless stated on the schematic.
6. R1 is critical for device linearity performance.
7. Critical component placement locations:
   Distance between center of C8 and U1 device package is 243 mil (11° at 880 MHz)
   Distance between center of L5 and U1 device package is 452 mil (20.5° at 880 MHz)
   Distance between center of C2 and U1 device package is 355 mil (16.1° at 880 MHz)
   Distance between center of C9 and U1 device package is 275 mil (12.4° at 880 MHz)

Typical Performance: TQP7M9104 (869 – 894 MHz)

Test conditions unless otherwise noted: V_{CC} = +5 V, I_{CQ} = 435 mA, I_{REF} = 19 mA, T=+25 °C

Parameter	Typical Value			Units
Frequency	869	880	894	MHz
Gain	20.8	20.8	20.8	dB
Input Return Loss	13.3	13.0	11.5	dB
Output Return Loss	7.7	8.6	9.8	dB
Output P1dB	+34.3	+34.1	+33.8	dBm
Output IP3 (+23 dBm / tone, Δf = 1 MHz)	+44.9	+44.9	+44.7	dBm
WCDMA Channel Power (At −50 dBc ACLR)	22.0	22.5	23.0	dBm

Performance Plots: TQP7M9104 (869 – 894 MHz)

Test conditions unless otherwise noted: V_{CC}=+5 V, Temp=+25°C

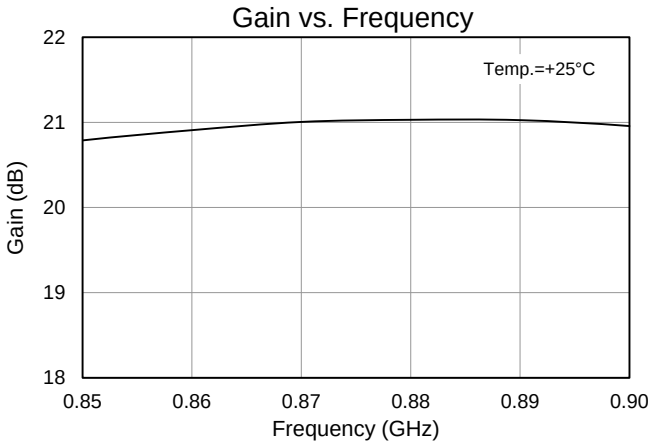

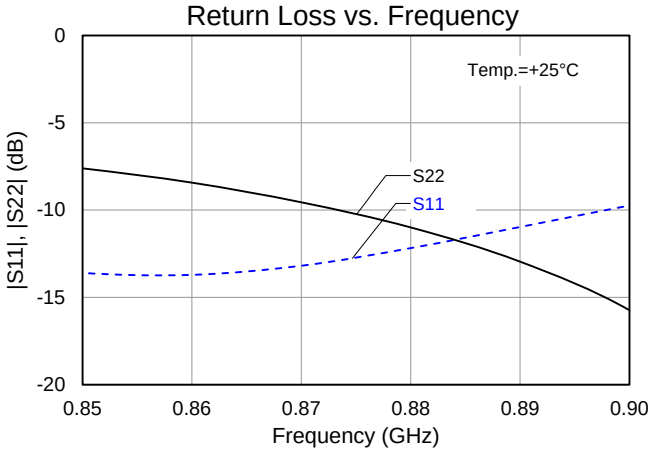

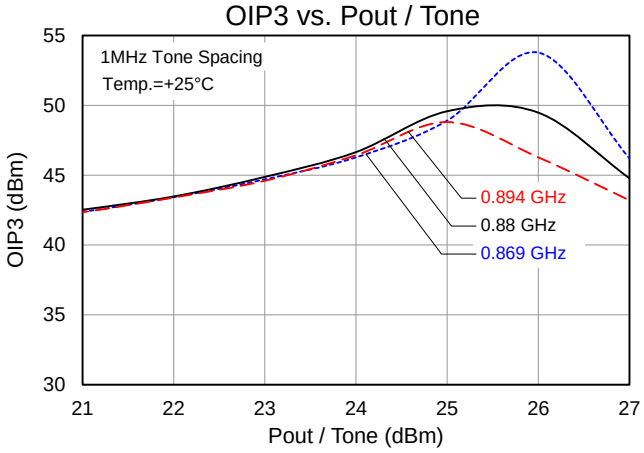

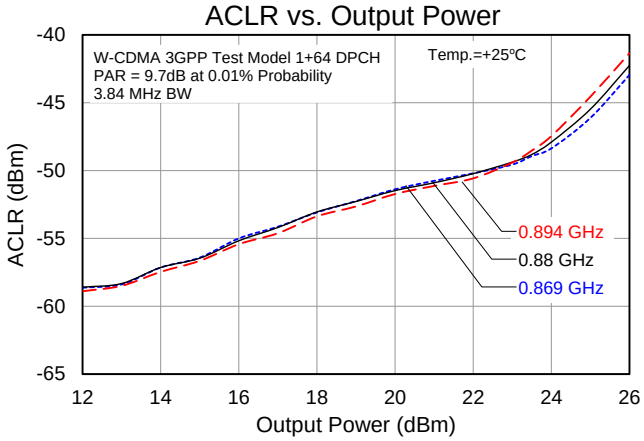

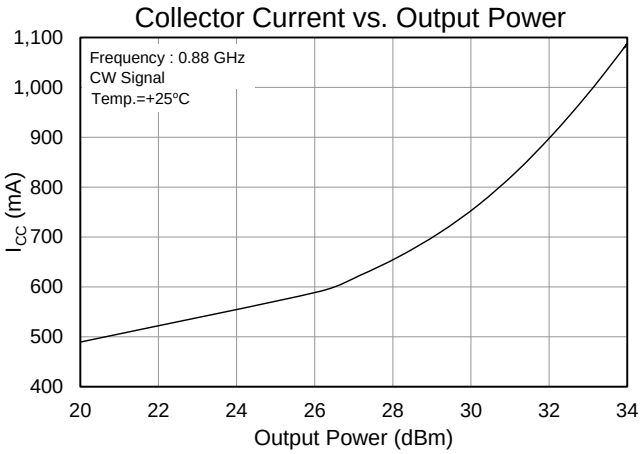

Application Circuit : TQP7M9104-PCB900 (920 – 960 MHz)

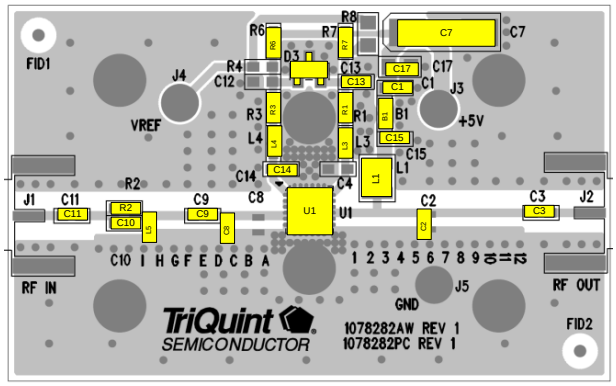

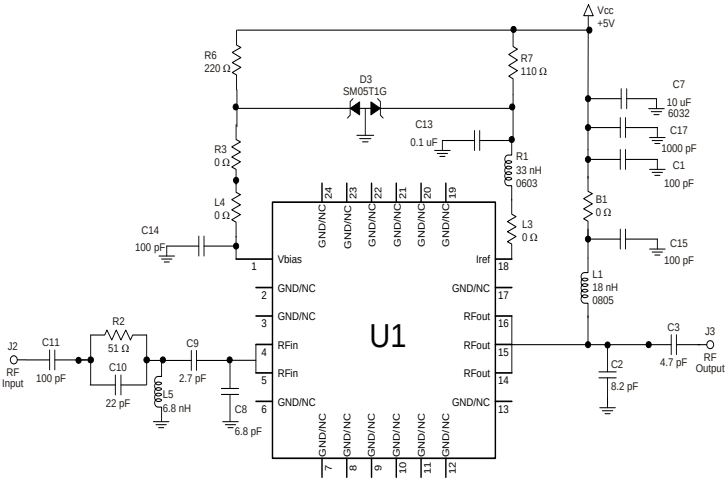

Notes:

1. See PC Board Layout under Application Information section for more information.
2. Components shown on the silkscreen but not on the schematic are not used.
3. 0 Ω resistors may be replaced with copper trace in the target application layout.
4. Iref can be used as device power down current by placing R7 at location R8.
5. The recommended component values are dependent upon the frequency of operation.
6. All components are of 0603 size unless stated on the schematic.
7. R1 is critical for device linearity performance.
8. Critical component placement locations:
   - Distance between center of C8 and U1 device package is 190 mil (9.2° at 940 MHz)
   - Distance between center of L5 and U1 device package is 452 mil (21.8° at 940 MHz)
   - Distance between center of C2 and U1 device package is 305 mil (14.7° at 940 MHz)
   - Distance between center of C9 and U1 device package is 275 mil (13.3° at 940 MHz)

Bill of Material – TQP7M9104

Reference Des.	Value	Description	Manuf.	Part Number
n/a	n/a	Printed Circuit Board	Qorvo	1078282
n/a	n/a	Printed Circuit Board	Qorvo	1078282
D3	n/a	Zener, dual, SOT-23	various	
C9	2.7 pF	Capacitor, Chip, 0603, ±0.05pF, 50 V, Accu-P	AVX	06035J2R7ABSTR
B1, L3, L4, R3	0 Ω	Resistor, Chip, 0603, 5%, 1/16W	various	
L5	6.8 nH	Inductor, 0603, 5%	Toko	LL1608-FSL6N8
C3	4.7 pF	Capacitor, Chip, 0603, ±0.05pF, 50 V, Accu-P	AVX	06035J4R7ABSTR
C2, C8	8.2 pF	Capacitor, Chip, 0603, ±0.05pF, 50 V, Accu-P	AVX	06035J8R2ABSTR
C10	22 pF	Capacitor, Chip, 0603, 5%, 50 V, NPO/COG	various	
C1, C11, C14, C15	100 pF	Capacitor, Chip, 0603, 5%, 50V, NPO/COG	various	
L1	18 nH	Inductor, 1008, 5%, Coilcraft CS Series	Coilcraft	1008HQ-18NXJL
C17	1000 pF	Capacitor, Chip, 0603, 10%, 50V, NPO/COG	various	
C13	0.1 µF	Capacitor, Chip, 0603, 50V, X5R, 10%	various	
C7	10 µF	Capacitor , Tantalum, 6032, 35V, 10%	various	
R2	51 Ω	Resistor, Chip, 0603, 5%, 1/16W	various	
R6	220 Ω	Resistor, Chip, 0603, 1%, 1/16W	various	
R7	110 Ω	Resistor, Chip, 0603, 1%, 1/16W	various	
R1	33 nH	Inductor, 0603, 5%	Toko	LL1608-FSL33N
R8, R4, C12, C4,D3	n/a	Do Not Place		

Typical Performance: TQP7M9104-PCB900 (920 – 960 MHz)

Test conditions unless otherwise noted: V_{CC} = +5 V, I_{CQ} = 435 mA, I_{REF} = 19 mA, T=+25 °C

Parameter	Typical Value			Units
Frequency	920	940	960	MHz
Input Return Loss	13.0	12.0	11.0	dB
Output Return Loss	9.0	11.8	15.0	dB
Output P1dB	+33.9	+33.8	+33.4	dBm
Output IP3 (+23 dBm/tone, Δf = 1 MHz)	+45.0	+45.0	+45.0	dBm
WCDMA Channel Power (at −50 dBc ACLR) (1)	+24.0	+23.5	+23.0	dBm

Notes:
1. ACLR Test set-up: 3GPP WCDMA, TM1+64 DPCH, +5 MHz offset, PAR = 9.7 dB at 0.01% Prob.

RF Performance Plots: TQP7M9104-PCB900 (920 – 960 MHz)

Test conditions unless otherwise noted: V_{CC}=+5 V, Temp=+25°C

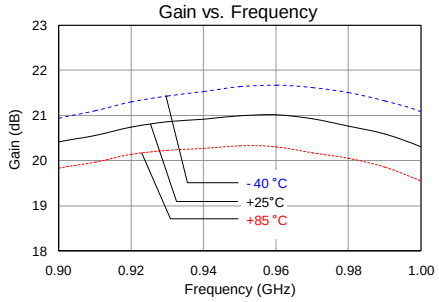

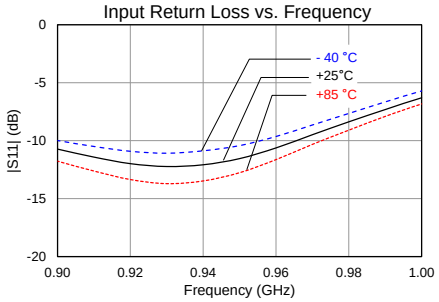

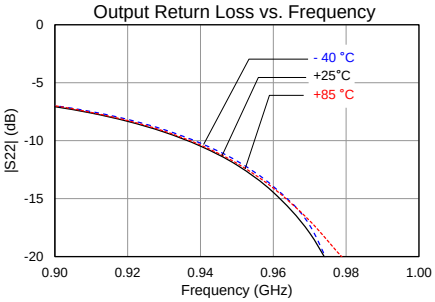

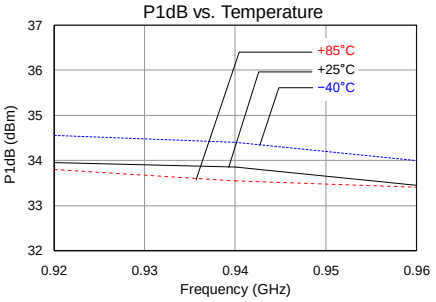

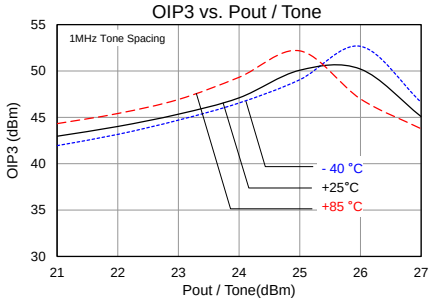

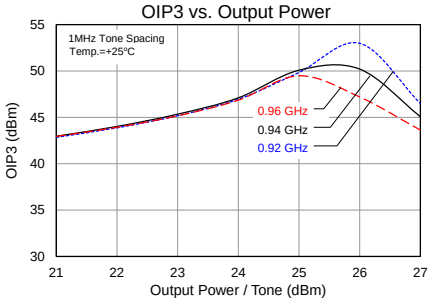

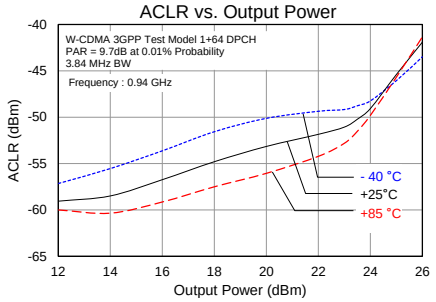

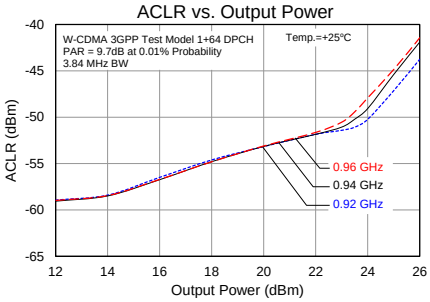

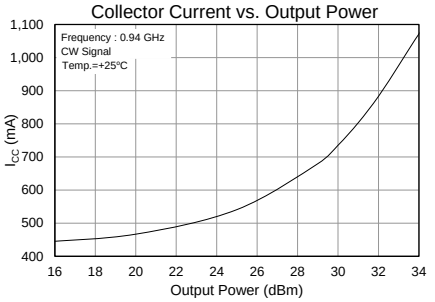

Application Circuit: TQP7M9104-PCB2140 (2110 – 2170 MHz)

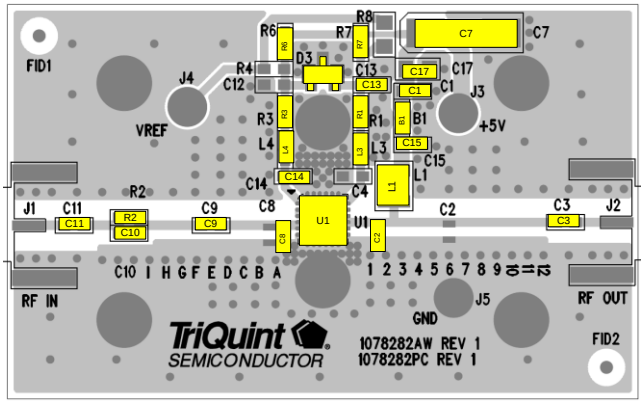

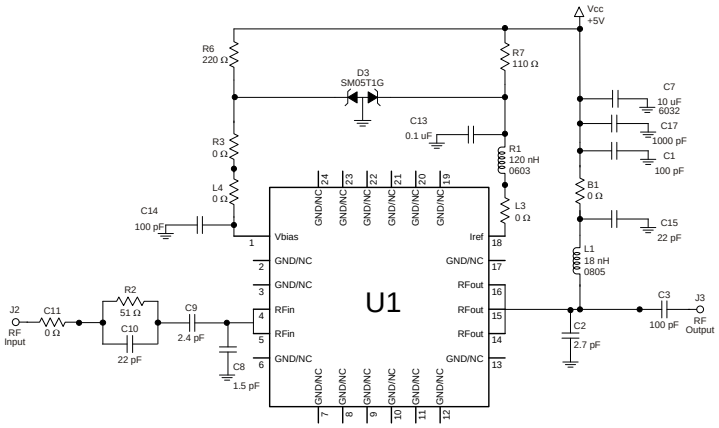

Notes:

1. See PC Board Layout under Application Information section for more information.
2. Components shown on the silkscreen but not on the schematic are not used.
3. 0 Ω resistors may be replaced with copper trace in the target application layout.
4. Iref can be used as device power down current by placing R7 at location R8.
5. The recommended component values are dependent upon the frequency of operation.
6. All components are of 0603 size unless stated on the schematic.
7. R1 is critical for device linearity performance.
8. Critical component placement locations:
   - Distance between center of C8 and U1 device package is 50 mil (5.5° at 2140 MHz)
   - Distance between center of C2 and U1 device package is 113 mil (12.4° at 2140 MHz)
   - Distance between center of C9 and U1 device package is 275 mil (30.3° at 2140 MHz)

Bill of Material – TQP7M9104-PCB2140

Reference Des.	Value	Description	Manuf.	Part Number
U1	n/a	2W High Linearity Amplifier	Qorvo	TQP7M9104
n/a	n/a	Printed Circuit Board	Qorvo	1078282
D3	n/a	Zener, dual, SOT-23	various	
C8	1.5 pF	Capacitor, Chip, 0603, ±0.05pF, 50V, Accu-P	AVX	06035J1R5ABSTR
C9	2.4 pF	Capacitor, Chip, 0603, ±0.05pF, 50V, Accu-P	AVX	06035J2R4ABSTR
C2	2.7 pF	Capacitor, Chip, 0603, ±0.05pF, 50V, Accu-P	AVX	06035J2R7ABSTR
B1, L3, L4, R3, C11	0 Ω	Resistor, Chip, 0603, 5%, 1/16W	various	
C10, C15	22 pF	Capacitor, Chip, 0603, 5%, 50V, NPO/COG	various	
C1, C14, C3	100 pF	Capacitor, Chip, 0603, 5%, 50V, NPO/COG	various	
L1	18 nH	Inductor, 1008, 5%, Ceramic	Coilcraft	1008HQ-18NXJL
C17	1000 pF	Capacitor, Chip, 0603, 10%, 50V, NPO/COG	various	
C13	0.1 µF	Capacitor, Chip, 0603, 10%, 50V, X5R	various	
C7	10 µF	Capacitor , Tantalum, 6032, 20 %, 50V	various	
R2	51 Ω	Resistor, Chip, 0603, 5%, 1/16W	various	
R6	220 Ω	Resistor, Chip, 0603, 1%, 1/16W	various	
R7	110 Ω	Resistor, Chip, 0603, 1%, 1/16W	various	
R1	120 nH	Inductor, 0603, 5%	Toko	LL1608-FSR12J
R8, R4, C12, C4, D3	n/a	Do Not Place		

Typical Performance: TQP7M9104-PCB2140 (2110 – 2170 MHz)

Test conditions unless otherwise noted: V_{CC} = +5 V, I_{CQ} = 435 mA, I_{REF} = 19 mA

Parameter	Typical Value			Units
Frequency	2110	2140	2170	MHz
Gain	15.8	15.8	15.8	dB
Input Return Loss	12.4	12.0	11.8	dB
Output Return Loss	8.7	9.5	10.5	dB
Output P1dB	+32.9	+32.8	+32.8	dBm
Output IP3 (+17 dBm / tone, Δf = 1 MHz)	+49.0	+49.5	+50.0	dBm
WCDMA Channel power (at −50 dBc ACLR) (1)	+23.5	+23.8	+24.0	dBm
Noise Figure	4.4	4.4	4.6	dB

Notes:
1. ACLR Test set-up: 3GPP WCDMA, TM1+64 DPCH, +5 MHz offset, PAR = 9.7 dB at 0.01% Prob.

RF Performance Plots: TQP7M9104-PCB2140 (2110 – 2170 MHz)

Test conditions unless otherwise noted: V_{CC}=+5 V, Temp=+25 °C

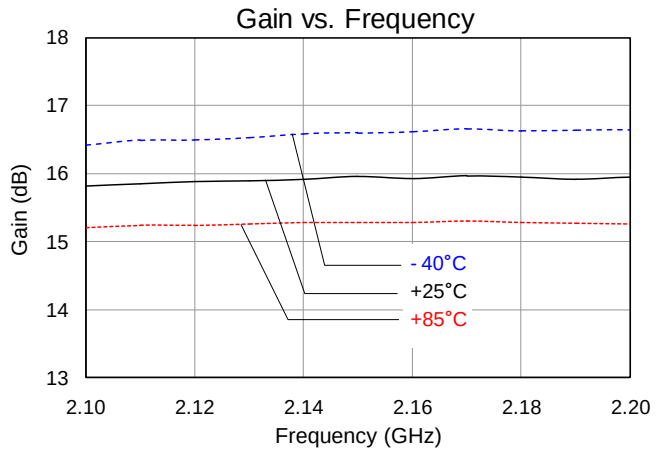

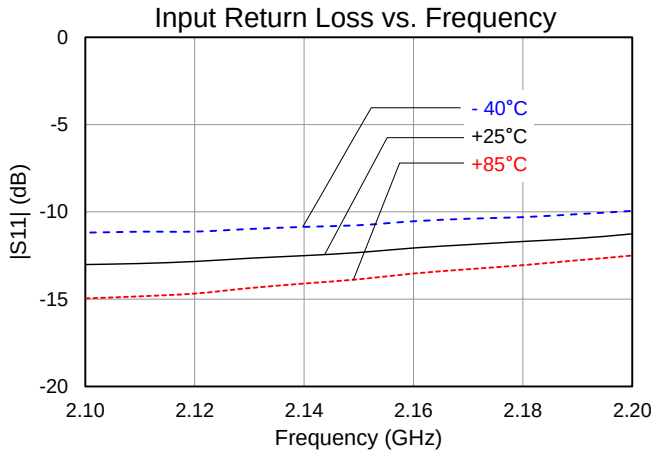

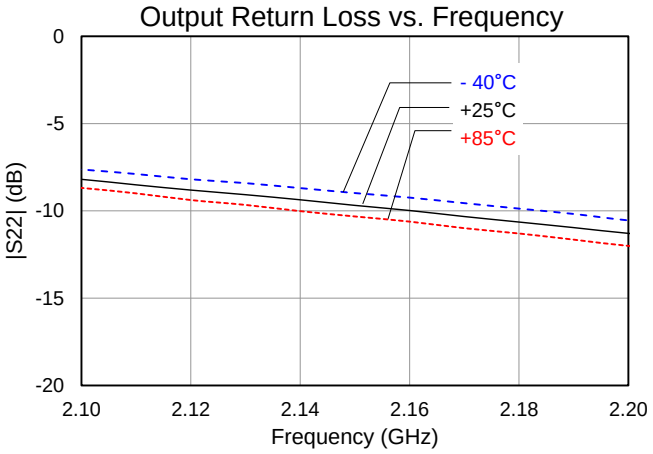

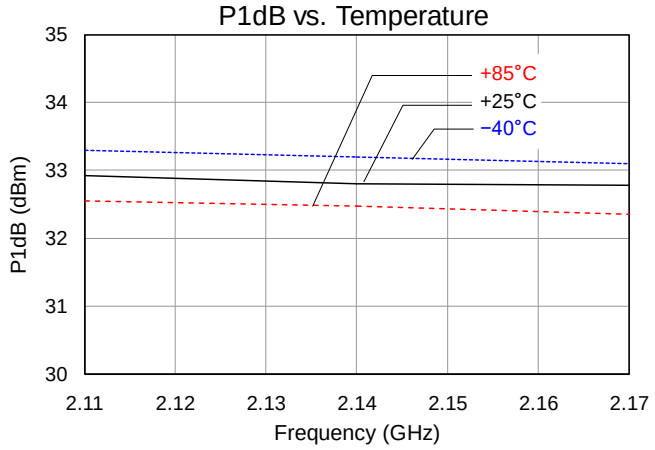

RF Performance Plots: TQP7M9104-PCB2140 (2110 – 2170 MHz)

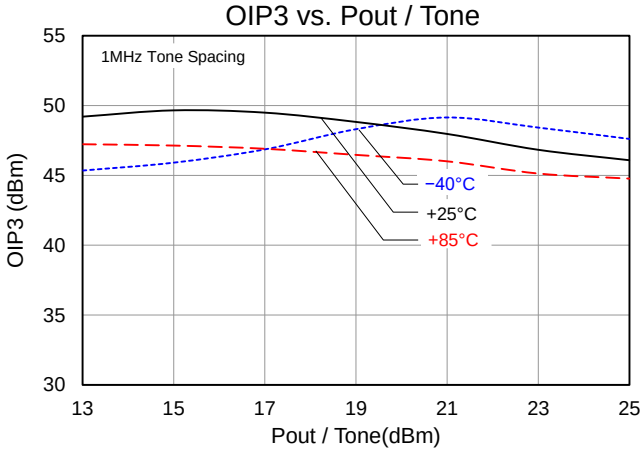

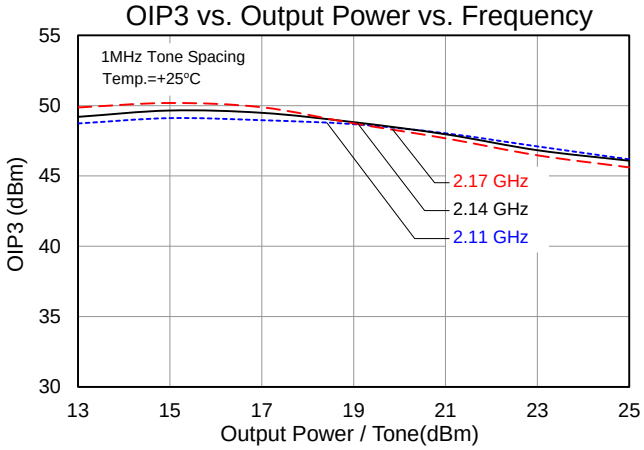

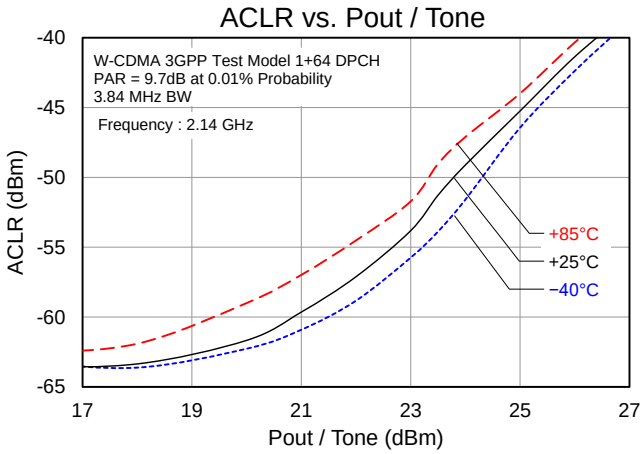

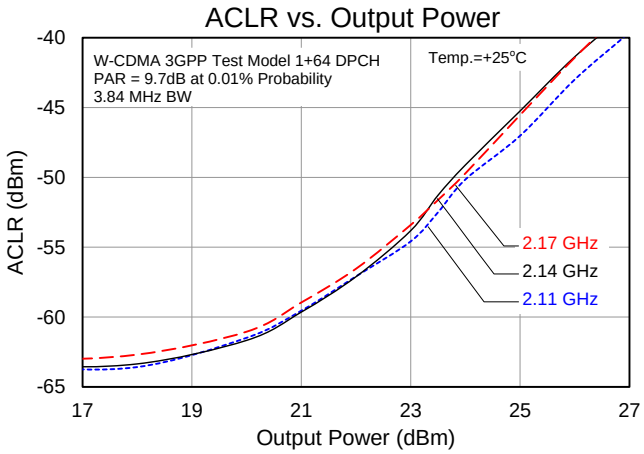

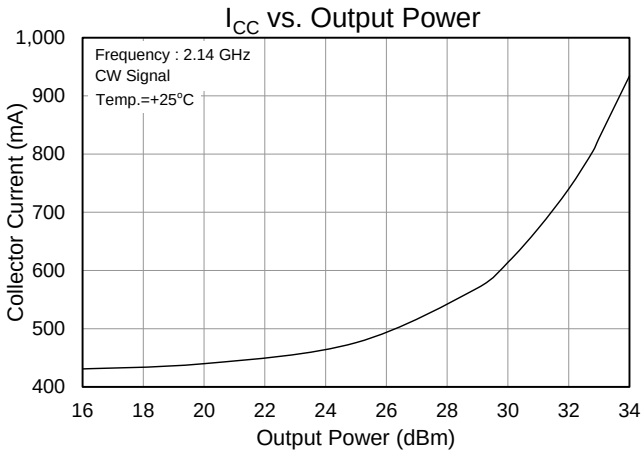

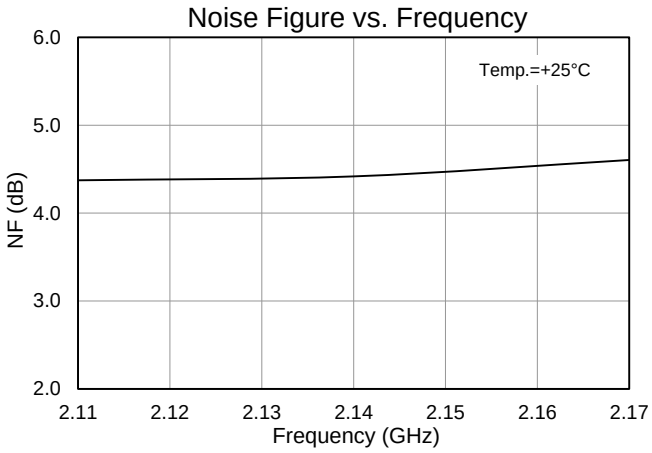

Pin Configuration and Description

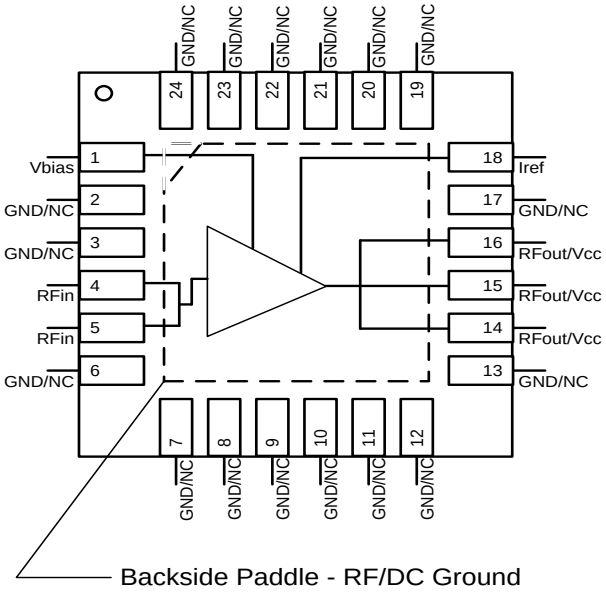

Pin No.	Symbol	Description
1	V_{BIAS}	Voltage supply for active bias for the amp. Connect to same supply voltage as Vcc.
2, 3, 6,7, 8, 9, 10, 11, 12, 13,17, 19, 20, 21, 22, 23, 24	GND / NC	No internal connection. This pin can be grounded or N/C on PCB. Land pads should be provided for PCB mounting integrity.
4, 5	RF_{IN}	RF Input. DC voltage present, blocking capacitor required. Requires external match for optimal performance.
14, 15, 16	RF_{OUT} / V_{CC}	RF Output. DC Voltage present, blocking cap required. Requires external match for optimal performance.
18	I_{REF}	Reference current into internal active bias current mirror. Current into Iref sets device quiescent current. Also, can be used as on/off control.
Backside paddle	RF / DC GND	Multiple Vias should be employed to minimize inductance and thermal resistance. Use recommended via pattern shown under mounting configuration and ensure good solder attach for optimum thermal and electrical performance

Package Marking and Dimensions

Marking: Part Identifier – 7M9104
Date Code – YYMM
Lot code – AaXXXX

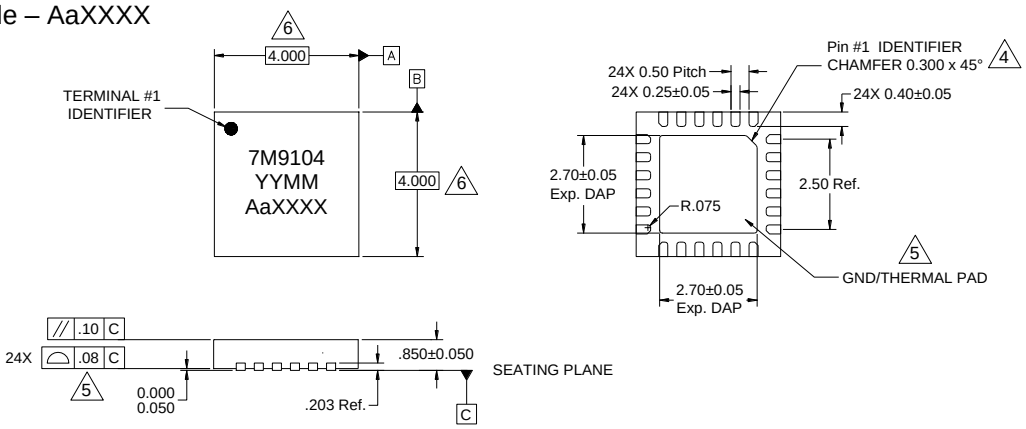

Notes:

1. All dimensions are in millimeters. Angles are in degrees.
2. Except where noted, this part outline conforms to JEDEC standard MO-220, Issue E (Variation VGGC) for thermally enhanced plastic very thin fine pitch quad flat no lead package (QFN).
3. Dimension and tolerance formats conform to ASME Y14.4M-1994.
4. The terminal #1 identifier and terminal numbering conform to JESD 95-1 SPP-012.
5. Co-planarity applies to the exposed ground/thermal pad as well as the contact pins.
6. Package body length/width does not include plastic flash protrusion across mold parting line.

PCB Mounting Pattern

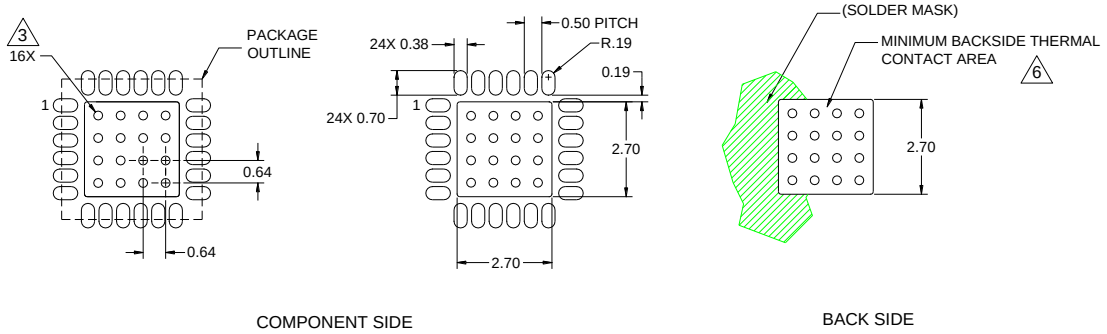

Notes:

1. All dimensions are in millimeters. Angles are in degrees.
2. Use 1 oz. copper minimum for top and bottom layer metal.
3. Vias are required under the backside paddle of this device for proper RF/DC grounding and thermal dissipation. We recommend a 0.35mm (#80/.0135") diameter bit for drilling via holes and a final plated thru diameter of 0.25mm (0.10”).
4. Ensure good package backside paddle solder attach for reliable operation and best electrical performance.
5. Place mounting screws near the part to fasten a back side heat sink.
6. Do not apply solder mask to the back side of the PC board in the heat sink contact region.
7. Ensure that the backside via region makes good physical contact with the heat sink.

Handling Precautions

Parameter	Rating	Standard
ESD – Human Body Model (HBM)	Class 1C	ESDA / JEDEC JS-001-2012
ESD – Charged Device Model (CDM)	Class C3	JEDEC JESD22-C101F
MSL – Moisture Sensitivity Level	Level 1	IPC/JEDEC J-STD-020

Caution!
ESD-Sensitive Device

Solderability

Compatible with both lead-free (260°C max. reflow temp.) and tin/lead (245°C max. reflow temp.) soldering processes.
Solder profiles available upon request.

Contact plating: Annealed Matte Tin over Copper

RoHS Compliance

This part is compliant with the 2011/65/EU RoHS directive (Restrictions on the Use of Certain Hazardous Substances in Electrical and Electronic Equipment) as amended by Directive 2015/863/EU. This product also has the following attributes:

- Lead Free
- Halogen Free (Chlorine, Bromine)
- Antimony Free
- TBBP-A ($C_{15}H_{12}Br_4O_2$) Free
- PFOS Free
- SVHC Free

Contact Information

For the latest specifications, additional product information, worldwide sales and distribution locations:

Web: www.qorvo.com

Tel: **1-844-890-8163**

Email: customer.support@qorvo.com

For technical questions and application information: **Email:** appsupport@qorvo.com

Important Notice

The information contained herein is believed to be reliable; however, Qorvo makes no warranties regarding the information contained herein and assumes no responsibility or liability whatsoever for the use of the information contained herein. All information contained herein is subject to change without notice. Customers should obtain and verify the latest relevant information before placing orders for Qorvo products. The information contained herein or any use of such information does not grant, explicitly or implicitly, to any party any patent rights, licenses, or any other intellectual property rights, whether with regard to such information itself or anything described by such information. **THIS INFORMATION DOES NOT CONSTITUTE A WARRANTY WITH RESPECT TO THE PRODUCTS DESCRIBED HEREIN, AND QORVO HEREBY DISCLAIMS ANY AND ALL WARRANTIES WITH RESPECT TO SUCH PRODUCTS WHETHER EXPRESS OR IMPLIED BY LAW, COURSE OF DEALING, COURSE OF PERFORMANCE, USAGE OF TRADE OR OTHERWISE, INCLUDING THE IMPLIED WARRANTIES OF MERCHANTABILITY AND FITNESS FOR A PARTICULAR PURPOSE.**

Without limiting the generality of the foregoing, Qorvo products are not warranted or authorized for use as critical components in medical, life-saving, or life-sustaining applications, or other applications where a failure would reasonably be expected to cause severe personal injury or death.

Copyright 2024 © Qorvo, Inc. | Qorvo is a registered trademark of Qorvo, Inc.

Mouser Electronics

Authorized Distributor

Click to View Pricing, Inventory, Delivery & Lifecycle Information:

Qorvo:

TQP7M9104 TQP7M9104-PCB2140 TQP7M9104-PCB900