TOSHIBA BiCD Integrated Circuit Silicon Monolithic

# TB6560AHQ, TB6560AFG

PWM Chopper-Type Bipolar Driver IC for Stepping Motor Control

The TB6560AHQ/AFG is a PWM chopper-type stepping motor driver IC designed for sinusoidal-input microstep control of bipolar stepping motors. The TB6560AHQ/AFG can be used in applications that require 2-phase, 1-2-phase, 2W1-2-phase and 4W1-2-phase excitation modes. The TB6560AHQ/AFG is capable of low-vibration, high-performance forward and reverse driving of a two-phase bipolar stepping motor using only a clock signal.

TB6560AHQ

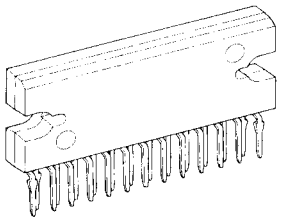

HZIP25-P-1.27

TB6560AFG

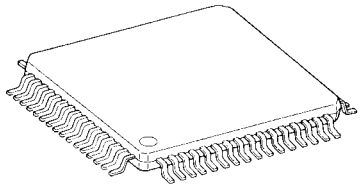

HQFP64-P-1010-0.50

Weight
HZIP25-P-1.27: 9.86 g (typ.)
HQFP64-P-1010-0.50: 0.26 g (typ.)

## Features

- Single-chip motor driver for sinusoidal microstep control of stepping motors
- High output withstand voltage due to the use of BiCD process:
  Ron (upper and lower sum) =
  TB6560AHQ: 0.6 Ω (typ.)
  TB6560AFG: 0.7 Ω (typ.)
- Forward and reverse rotation
- Selectable phase excitation modes (2, 1-2, 2W1-2 and 4W1-2)
- High output withstand voltage: $V_{DSS}$ = 40 V
- High output current: $I_{OUT}$ = TB6560AHQ: 3.5 A (peak)
  TB6560AFG: 2.5 A (peak)
- Packages: HZIP25-P-1.27
  HQFP64-P-1010-0.50
- Internal pull-down resistors on inputs: 100 kΩ (typ.)
- Output monitor pin: $M_O$ current ($I_{MO}$ (max) = 1 mA)
- Reset and enable pins
- Thermal shutdown (TSD)

*: These ICs are highly sensitive to electrostatic discharge. When handling them, ensure that the environment is protected against electrostatic discharge. Ensure also that the ambient temperature and relative humidity are maintained at reasonable level.

© 2014 TOSHIBA Corporation

## Block Diagram

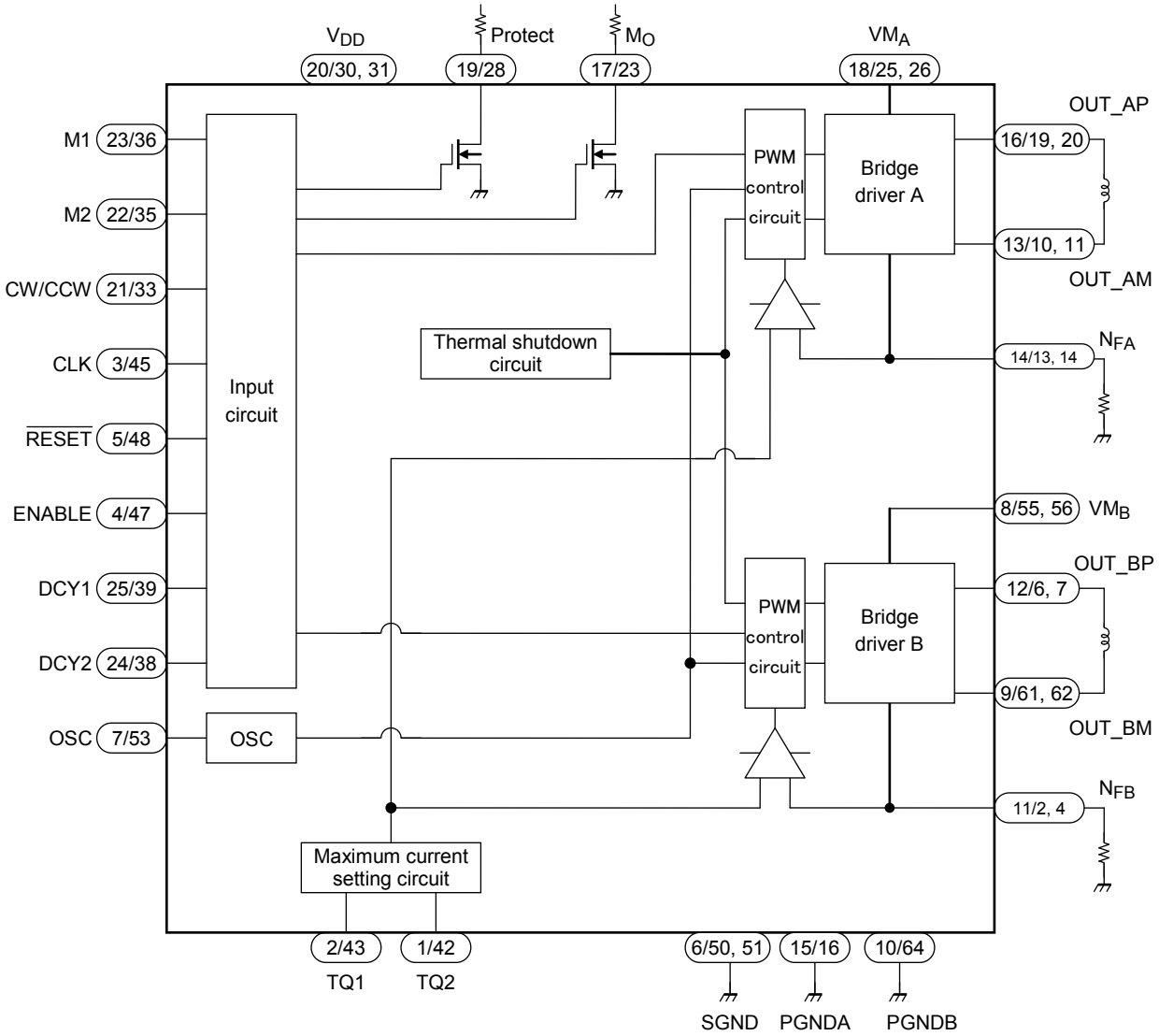

## Pin Functions

| Pin No. | | I/O | Symbol | Functional Description | Remarks |
|---|---|---|---|---|---|
| TB6560 AHQ | TB6560 AFG | | | | |
| 1 | 42 | Input | TQ2 | Torque setting input (current setting) | Internal pull-down resistor |
| 2 | 43 | Input | TQ1 | Torque setting input (current setting) | Internal pull-down resistor |
| 3 | 45 | Input | CLK | Clock input for microstepping | Internal pull-down resistor |
| 4 | 47 | Input | ENABLE | H: Enable; L: All outputs OFF | Internal pull-down resistor |
| 5 | 48 | Input | $\overline{\text{RESET}}$ | L: Reset (The outputs are reset to their initial states.) | Internal pull-down resistor |
| 6 | 50/51 | — | SGND | Signal ground (for control block) | (Note 1) |
| 7 | 53 | — | OSC | A CR oscillation circuit is connected to this pin. Performs output chopping. | |
| 8 | 55/56 | Input | $VM_B$ | Motor power supply pin (for phase-B driver) | (Note 1) |
| 9 | 61/62 | Output | OUT_BM | OUT_B output | (Note 1) |
| 10 | 64 (*) | — | PGNDB | Power ground | |
| 11 | 2/4 (*) | — | $N_{FB}$ | Connection pin for a B-channel current sensing resistor<br>Two pins of the TB6560AFG should be short-circuited. | (Note 1) |
| 12 | 6/7 | Output | OUT_BP | OUT_B output | (Note 1) |
| 13 | 10/11 | Output | OUT_AM | OUT_A output | (Note 1) |
| 14 | 13/14 (*) | — | $N_{FA}$ | Connection pin for an A-channel current sensing resistor<br>Two pins of the TB6560AFG should be short-circuited. | (Note 1) |
| 15 | 16 | — | PGNDA | Power ground | |
| 16 | 19/20 | Output | OUT_AP | OUT_A output | (Note 1) |
| 17 | 23 | Output | $M_O$ | Initial state sensing output. This pin is enabled in the initial state. | Open drain |
| 18 | 25/26 | Input | $VM_A$ | Motor power supply pin (for phase-A driver) | (Note 1) |
| 19 | 28 | Output | Protect | When TSD is activated: High; when in normal state: High-Z. | Open drain |
| 20 | 30/31 | Input | $V_{DD}$ | Power supply pin for control block | (Note 1) |
| 21 | 33 | Input | CW/CCW | Rotation direction select input.<br>L: Clockwise; H: Counterclockwise | Internal pull-down resistor |
| 22 | 35 | Input | M2 | Excitation mode setting input | Internal pull-down resistor |
| 23 | 36 | Input | M1 | Excitation mode setting input | Internal pull-down resistor |
| 24 | 38 | Input | DCY2 | Current decay mode setting input | Internal pull-down resistor |
| 25 | 39 | Input | DCY1 | Current decay mode setting input | Internal pull-down resistor |

(*): The pin assignment of the TB6560AFG is different from that of the TB6560FG.

TB6560AHQ: There is no no-connect (NC) pin.

TB6560AFG: Except the above pins, all pins are NC. The pin numbers of NC pins are: 1, 3, 5, 8, 9, 12, 15, 17, 18, 21, 22, 24, 27, 29, 32, 34, 37, 40, 41, 44, 46, 49, 52, 54, 57, 58, 59, 60, and 63.

Applying a voltage to NC pins does not cause any problem since they are not connected inside the IC.

All control input pins have an internal pull-down resistor of 100 kΩ (typ.)

Note 1: As for the TB6560AFG, two pins that have the same functionality should be short-circuited at a location as close to the TB6560AFG as possible.
(The electrical characteristics provided in this document are measured when those pins are handled in this manner.)

## Equivalent Circuits

| Input Pins<br>(M1, M2, CLK, CW/CCW, TQ1,TQ2,ENABLE, $\overline{\text{RESET}}$ ,DCY1, DCY2) | Output Pins<br>($M_O$, Protect) |
|---|---|
| 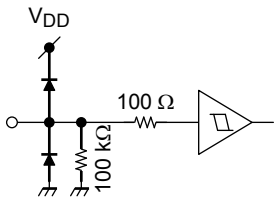 | 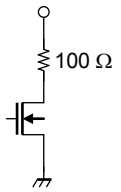 |

## Pin Assignment (top view)

### TB6560AFG

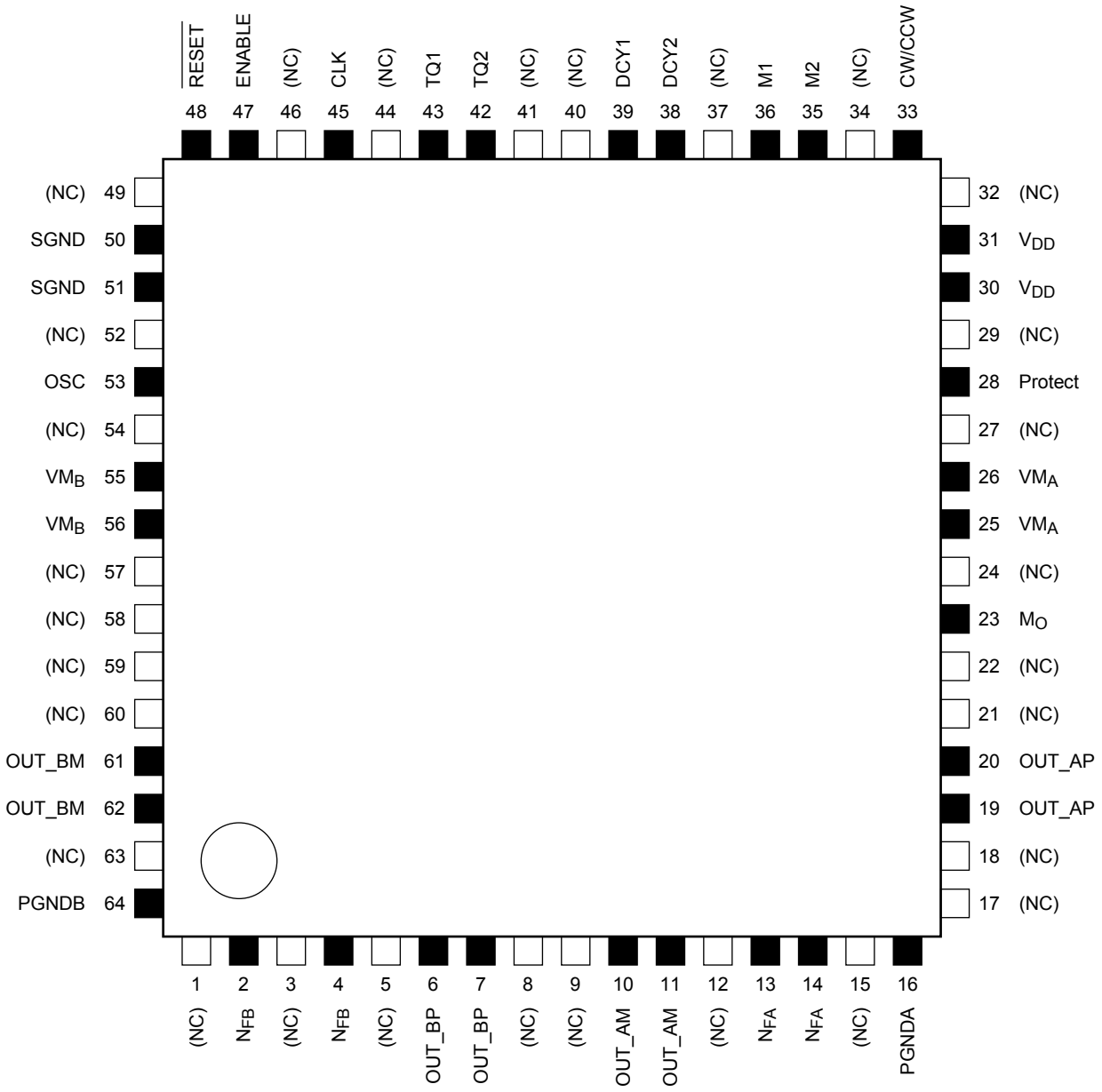


### TB6560AHQ

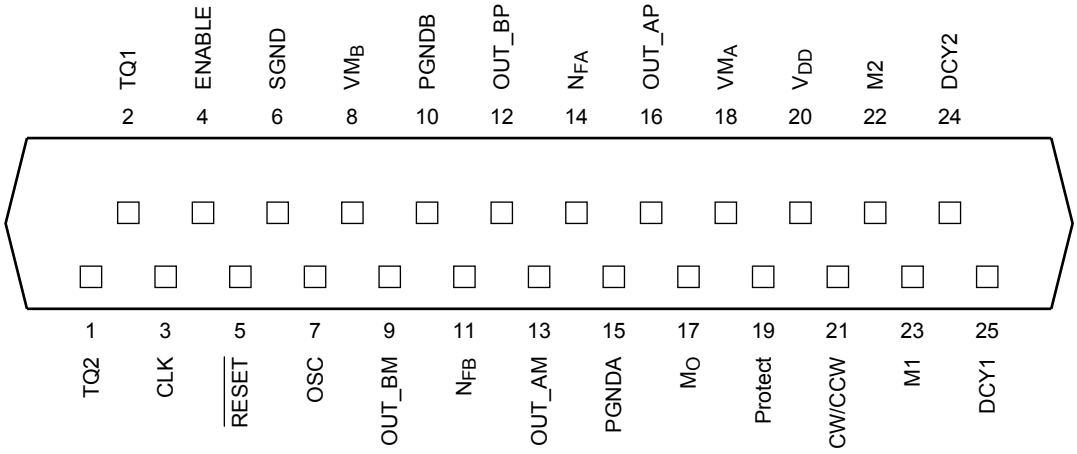

## Absolute Maximum Ratings ($T_a$ = 25°C)

| Characteristics | | | Symbol | Rating | Unit |
|---|---|---|---|---|---|
| Power supply voltage | | | $V_{DD}$ | 6 | V |
| | | | $VM_{A/B}$ | 40 | |
| Output current (per phase) | Peak | TB6560AHQ | $I_{O\ (PEAK)}$ | 3.5 | A |
| | | TB6560AFG | | 2.5 | |
| $M_O$ drain current | | | $I_{(Mo)}$ | 1 | mA |
| Protect drain current | | | $I_{(Protect)}$ | 1 | mA |
| Input voltage | | | $V_{IN}$ | $V_{DD}$ | V |
| Power dissipation | | TB6560AHQ | $P_D$ | 5 (Note 1) | W |
| | | | | 43 (Note 2) | |
| | | TB6560AFG | | 1.7 (Note 3) | |
| | | | | 4.2 (Note 4) | |
| Operating temperature | | | $T_{opr}$ | −30 to 85 | °C |
| Storage temperature | | | $T_{stg}$ | −55 to 150 | °C |

Note 1: $T_a$ = 25°C, without heatsink.

Note 2: $T_a$ = 25°C, with infinite heatsink (HZIP25).

Note 3: $T_a$ = 25°C, with soldered leads.

Note 4: $T_a$ = 25°C, when mounted on a board (4-layer board).

## Operating Range ($T_a$ = −30 to 85°C)

| Characteristics | | Symbol | Test Condition | Min | Typ. | Max | Unit |
|---|---|---|---|---|---|---|---|
| Power supply voltage | | $V_{DD}$ | — | 4.5 | 5.0 | 5.5 | V |
| | | $VM_{A/B}$ | $VM_{A/B} \geq V_{DD}$ | 4.5 | — | 34 | V |
| Output current | TB6560AHQ | $I_{OUT}$ | — | — | — | 3 | A |
| | TB6560AFG | | — | — | — | 1.5 | |
| Input voltage | | $V_{IN}$ | — | 0 | — | 5.5 | V |
| Clock frequency | | $f_{CLK}$ | — | — | — | 15 | kHz |
| OSC frequency | | $f_{OSC}$ | — | — | — | 600 | kHz |

## Electrical Characteristics ($T_a$ = 25°C, $V_{DD}$ = 5 V, VM = 24 V)

| Characteristics | | Symbol | Test Condition | Min | Typ. | Max | Unit |
|---|---|---|---|---|---|---|---|
| Input voltage | High | $V_{IN\ (H)}$ | M1, M2, CW/CCW, CLK, $\overline{RESET}$, ENABLE, DCY1, DCY2, TQ1, TQ2 | 2.0 | — | $V_{DD}$ | V |
| | Low | $V_{IN\ (L)}$ | | −0.2 | — | 0.8 | |
| Input hysteresis voltage (Note) | | $V_{INhys}$ | | — | 400 | — | mV |
| Input current | | $I_{IN\ (H)}$ | M1, M2, CW/CCW, CLK, $\overline{RESET}$, ENABLE, DCY1, DCY2, TQ1, TQ2<br>$V_{IN}$ = 5.0 V<br>Internal pull-down resistor | 30 | 55 | 80 | μA |
| | | $I_{IN\ (L)}$ | $V_{IN}$ = 0 V | — | — | 1 | |
| $V_{DD}$ supply current | | $I_{DD1}$ | Outputs: Open,<br>$\overline{RESET}$ : H, ENABLE: H<br>(2, 1-2 phase excitation) | — | 3 | 5 | mA |
| | | $I_{DD2}$ | Outputs: Open,<br>$\overline{RESET}$ : H, ENABLE: H<br>(4W1−2, 2W1-2 phase excitation) | — | 3 | 5 | |
| | | $I_{DD3}$ | $\overline{RESET}$ : L, ENABLE: L | — | 2 | 5 | |
| | | $I_{DD4}$ | $\overline{RESET}$ : H, ENABLE: L | — | 2 | 5 | |
| VM supply current | | $I_{M1}$ | $\overline{RESET}$ : H/L, ENABLE: L | — | 0.5 | 1 | mA |
| | | $I_{M2}$ | $\overline{RESET}$ : H/L, ENABLE: H | — | 0.7 | 2 | |
| Channel-to-channel voltage differential | | $\Delta V_O$ | B/A, $C_{OSC}$ = 330 μF | −5 | — | 5 | % |
| $V_{NF}$ voltage change according to the torque settings | | $V_{NFHH}$ | TQ1 = H, TQ2 = H | 10 | 20 | 30 | % |
| | | $V_{NFHL}$ | TQ1 = L, TQ2 = H | 45 | 50 | 55 | |
| | | $V_{NFLH}$ | TQ1 = H, TQ2 = L | 70 | 75 | 80 | |
| | | $V_{NFLL}$ | TQ1 = L, TQ2 = L | — | — | 100 | |
| Minimum clock pulse width | | $t_{W\ (CLK)}$ | $C_{OSC}$= 330 pF | 30 | — | — | μs |
| $M_O$ output residual voltage | | $V_{OL}$ $M_O$ | $I_{OL}$ = 1 mA | — | — | 0.5 | V |
| Protect output rest voltage (Note) | | $V_{OL}$ Protect | $I_{OL}$ = 1 mA | — | — | 0.5 | V |
| TSD threshold (Note) | | TSD | — | — | 170 | — | °C |
| TSD hysteresis (Note) | | TSDhys | — | — | 20 | — | °C |
| Oscillating frequency | | $f_{OSC}$ | $C_{OSC}$ = 330 pF | 60 | 130 | 200 | kHz |

Note: Not tested in production

## Electrical Characteristics ($T_a$ = 25°C, $V_{DD}$ = 5 V, VM = 24 V)

| Characteristics | | | | Symbol | Test Condition | | Min | Typ. | Max | Unit |
|---|---|---|---|---|---|---|---|---|---|---|
| Output ON-resistance | | | TB6560AHQ | Ron U1H | $I_{OUT}$ = 1.5 A | | — | 0.3 | 0.4 | Ω |
| | | | | Ron L1H | | | — | 0.3 | 0.4 | |
| | | | TB6560AFG | Ron U1F | $I_{OUT}$ = 1.5 A | | — | 0.35 | 0.5 | |
| | | | | Ron L1F | | | — | 0.35 | 0.5 | |
| A-/B-phase chopping current (Note 1) | 4W1-2-phase excitation | 2W1-2-phase excitation | 1-2-phase excitation | Vector | θ = 0 | TQ1 = L, TQ2 = L | — | 100 | — | % |
| | | — | — | | θ = 1/16 | | — | 100 | — | |
| | | 2W1-2-phase excitation | — | | θ = 2/16 | | 93 | 98 | 100 | |
| | | — | — | | θ = 3/16 | | 91 | 96 | 100 | |
| | | 2W1-2-phase excitation | — | | θ = 4/16 | | 87 | 92 | 97 | |
| | | — | — | | θ = 5/16 | | 83 | 88 | 93 | |
| | | 2W1-2-phase excitation | — | | θ = 6/16 | | 78 | 83 | 88 | |
| | | — | — | | θ = 7/16 | | 72 | 77 | 82 | |
| | | 2W1-2-phase excitation | 1-2-phase excitation | | θ = 8/16 | | 66 | 71 | 76 | |
| | | — | — | | θ = 9/16 | | 58 | 63 | 68 | |
| | | 2W1-2-phase excitation | — | | θ = 10/16 | | 51 | 56 | 61 | |
| | | — | — | | θ = 11/16 | | 42 | 47 | 52 | |
| | | 2W1-2-phase excitation | — | | θ = 12/16 | | 33 | 38 | 43 | |
| | | — | — | | θ = 13/16 | | 24 | 29 | 34 | |
| | | 2W1-2-phase excitation | — | | θ = 14/16 | | 15 | 20 | 25 | |
| | | — | — | | θ = 15/16 | | 5 | 10 | 15 | |
| | 2-phase excitation | | | | — | | — | 100 | — | |
| Reference voltage | | | | $V_{NF}$ | TQ1, TQ2 = L (100 %)<br>OSC = 100 kHz | | 450 | 500 | 550 | mV |
| Output transistor switching characteristics (Note 2) | | | | $t_r$ | $R_L$ = 10 Ω, $V_{NF}$ = 0.5 V | | — | 1 | — | μs |
| | | | | $t_f$ | | | — | 1 | — | |
| Delay time (Note 2) | | | | $t_{pLH}$ | $\overline{\text{RESET}}$ to output | | — | 1 | — | |
| | | | | $t_{pLH}$ | ENABLE to output | | — | 3 | — | |
| | | | | $t_{pHL}$ | | | — | 2 | — | |
| Output leakage current | | | Upper side | $I_{LH}$ | VM = 40 V | | — | — | 1 | μA |
| | | | Lower side | $I_{LL}$ | | | — | — | 1 | |

Note 1: Relative to the peak current at θ = 0.

Note 2: Not tested in production.

## Functional Descriptions

### 1. Excitation Mode Settings

The excitation mode can be selected from the following four modes using the M1 and M2 inputs. (The 2-phase excitation mode is selected by default since both M1 and M2 have internal pull-down resistors.)

| Inputs | | Mode (Excitation) |
|---|---|---|
| M2 | M1 | |
| L | L | 2-phase |
| L | H | 1-2-phase |
| H | L | 4W1-2-phase |
| H | H | 2W1-2-phase |

### 2. Function Table (Relationship Between Inputs and Output Modes)

When the ENABLE pin is Low, outputs are off. When the $\overline{\text{RESET}}$ pin is Low, the outputs are put in the Initial mode as shown in the table below. In this mode, the states of the CLK and CW/CCW pins are don't-cares.

| Inputs | | | | Output Mode |
|---|---|---|---|---|
| CLK | CW/CCW | $\overline{\text{RESET}}$ | ENABLE | |
| ↑ | L | H | H | CW |
| ↑ | H | H | H | CCW |
| X | X | L | H | Initial mode |
| X | X | X | L | Z |

X: Don't care

### 3. Initial Mode

When $\overline{\text{RESET}}$ is asserted, phase currents in each excitation mode are as follows. At this time, the $M_O$ pin goes Low (open-drain connection).

| Excitation Mode | A-Phase Current | B-Phase Current |
|---|---|---|
| 2-phase | 100 % | –100 % |
| 1-2-phase | 100 % | 0 % |
| 2W1-2-phase | 100 % | 0 % |
| 4W1-2-phase | 100 % | 0 % |

### 4. Decay Mode Settings

It takes approximately four OSC cycles for discharging a current in PWM mode. The 25 % decay mode is created by inducing decay during the last cycle in Fast Decay mode; the 50 % Decay mode is created by inducing decay during the last two cycles in Fast Decay mode; and the 100 % Decay mode is created by inducing decay during all four cycles in Fast Decay mode.
Since the DCY1 and DCY2 pins have internal pull-down resistors, the Normal mode is selected when DCY1 and DCY2 are undriven.

| DCY2 | DCY1 | Current Decay Setting |
|---|---|---|
| L | L | Normal 0 % |
| L | H | 25 % Decay |
| H | L | 50 % Decay |
| H | H | 100 % Decay |

## 5. Torque Settings (Current Value)

The ratio of the current necessary for actual operations to the predefined current adjusted by an external resistor can be selected as follows. The Weak Excitation mode should be selected to set a torque extremely low like when the motor is at a fixed position.
Since the TQ2 and TQ1 pins have pull-down resistors, the 100 % torque setting is selected when TQ2 and TQ1 are undriven.

| TQ2 | TQ1 | Current Ratio |
|---|---|---|
| L | L | 100 % |
| L | H | 75 % |
| H | L | 50 % |
| H | H | 20 %<br>(Weak excitation) |

## 6. Calculation of the Predefined Output Current

To perform a constant current drive, the reference current should be adjusted by an external resistor. Charging stops when the $N_{FA}$ ($N_{FB}$) voltage reaches 0.5 V (when the torque setting is 100 %) so that a current does not exceed the predefined level.
$I_{OUT}$ (A) = 0.5 (V) / $R_{NF}$ (Ω)
Example: To set the peak current to 1 A, the value of an external resistor should be 0.5 Ω.

## 7. Protect and $M_O$ Output Pins

These are open-drain outputs. An external pull-up resistor should be added to these pins when in use. If the TSD circuit is activated, Protect is driven Low. When the IC enters the Initial state, $M_O$ is driven Low.

| Pin State | Protect | $M_O$ |
|---|---|---|
| Low | Thermal shutdown | Initial state |
| High-Z | Normal operation | Other than the initial state |

Open-drain connection

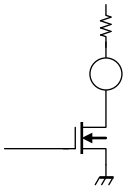

Rest voltage of output terminal Mo and output terminal Protect reach 0.5 V (max) when $I_O$ is 1 mA.

## 8. Adjusting the External Capacitor Value ($C_{OSC}$) and Minimum Clock Pulse Width ($t_{W(CLK)}$)

A triangular-wave is generated internally by CR oscillation. The capacitor is externally connected to the OSC pin. The recommended capacitor value is between 100 pF and 1000 pF.

Approximate equation: $f_{OSC} = 1/\{ C_{OSC} \times 1.5 \times (10/ C_{OSC} + 1)/66\} \times 1000$ kHz
(Since this is an approximation formula, the calculation result may not be exactly equal to the actual value.)

The approximate values are shown below.
The minimum clock pulse width ($t_{W(CLK)}$) corresponds to the external capacitor ($C_{OSC}$ ) as follows:

| Capacitor | Oscillating Frequency | Minimum Clock Pulse Width $t_{W(CLK)}$ (Note 1) |
|---|---|---|
| 1000 pF | 44 kHz | 90 μs (Note 2) |
| 330 pF | 130 kHz | 30 μs |
| 100 pF | 400 kHz | 10 μs (Note 2) |

Note 1: When the frequency of an input clock signal is high, the $C_{OSC}$ value should be small so that the duty cycle of an input clock pulse does not become extremely high (should be around 50 % or lower).

Note 2: Not tested in production.

## Relationship between the Enable and $\overline{\text{RESET}}$ and Output Signals

### Example 1: ENABLE input in 1-2-phase excitation mode (M1: H, M2: L)

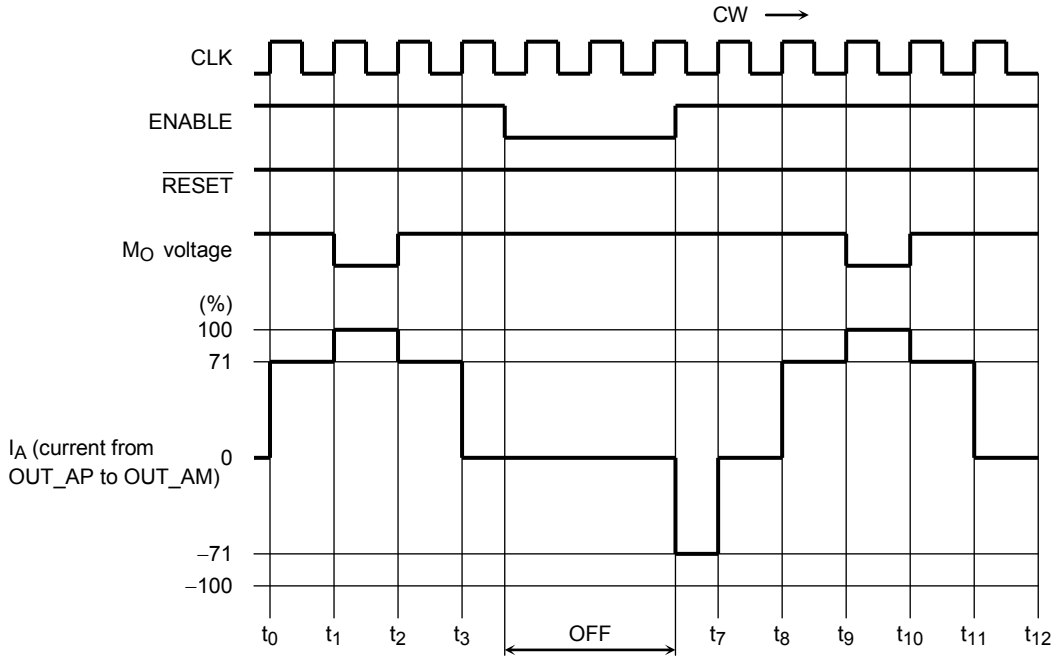


Setting the ENABLE signal Low disables only the output signals, while internal circuitry other than the output block continues to operate in accordance with the CLK input. Therefore, when the ENABLE signal goes High again, the output current generation is restarted as if phases proceeded with the CLK signal.

### Example 2: $\overline{\text{RESET}}$ input in 1-2-phase excitation mode (M1: H, M2: L)

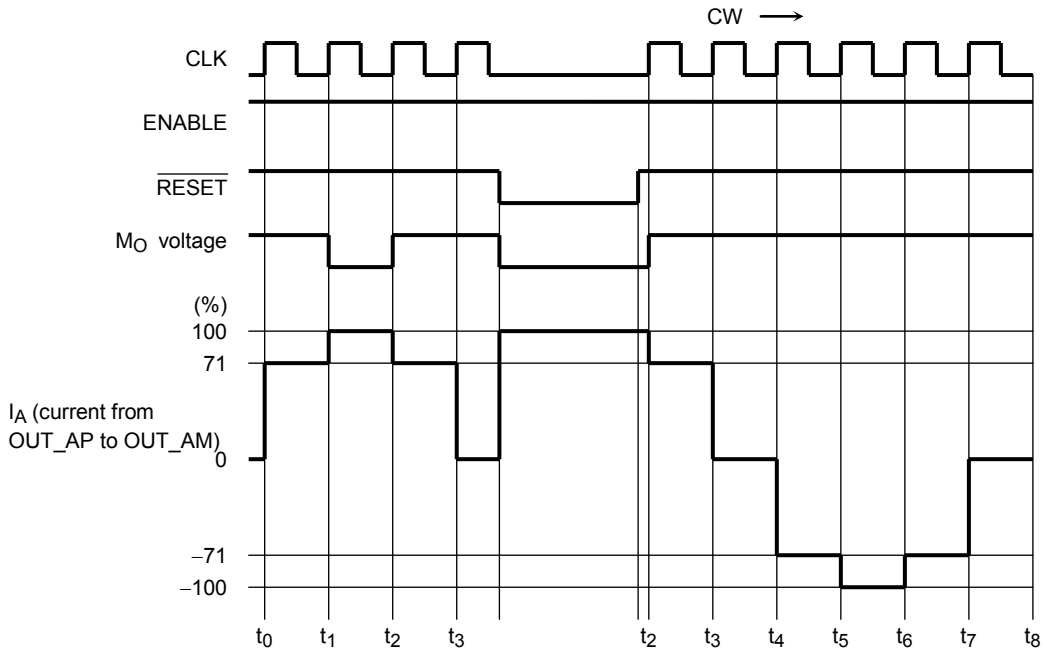


Setting the $\overline{\text{RESET}}$ signal Low causes the outputs to be put in the Initial state and the $M_O$ output to be driven Low (Initial state: A-channel output current is at its peak (100 %)).

When the $\overline{\text{RESET}}$ signal goes High again, the output current generation is restarted at the next rising edge of CLK with the state following the Initial state.

**2-Phase Excitation (M1: L, M2: L, CW Mode)**

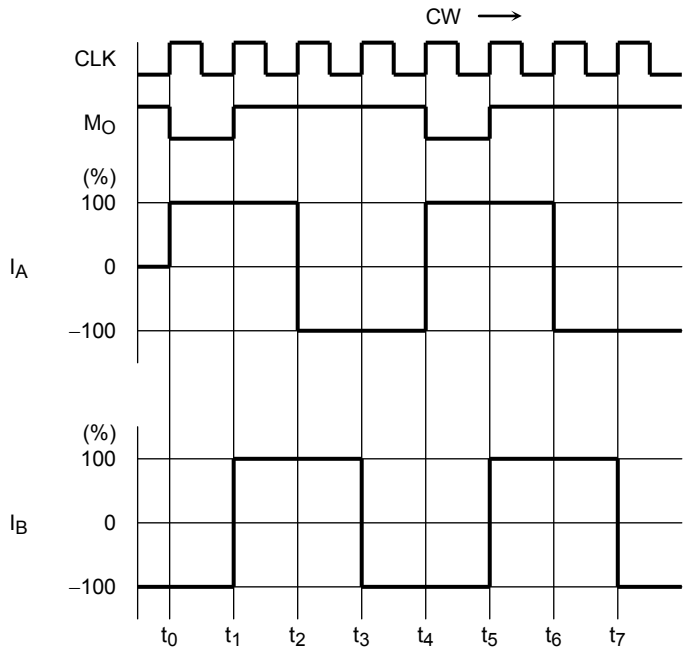


**1-2-Phase Excitation (M1: H, M2: L, CW Mode)**

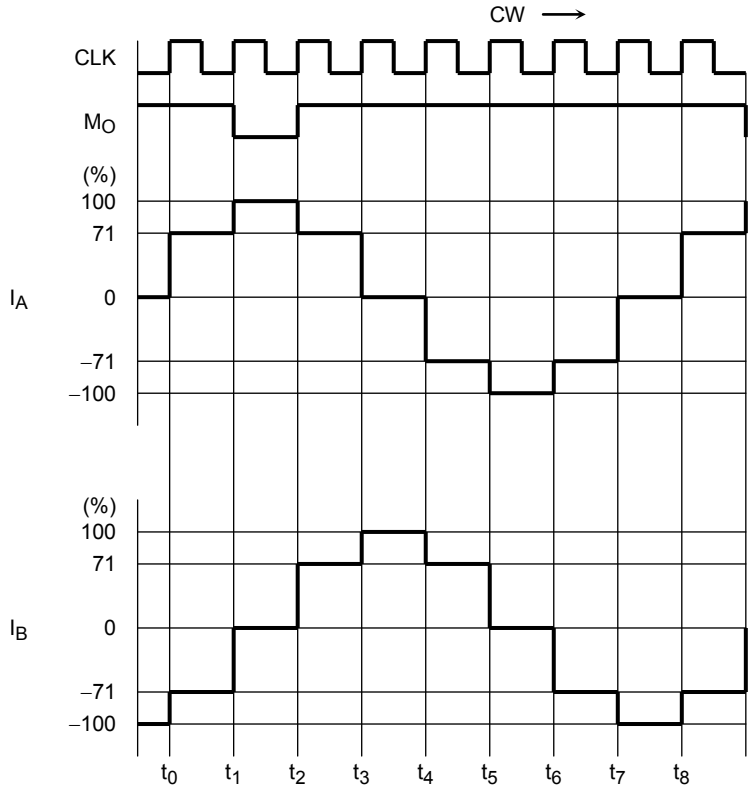

**2W1-2-Phase Excitation (M1: H, M2: H, CW Mode)**

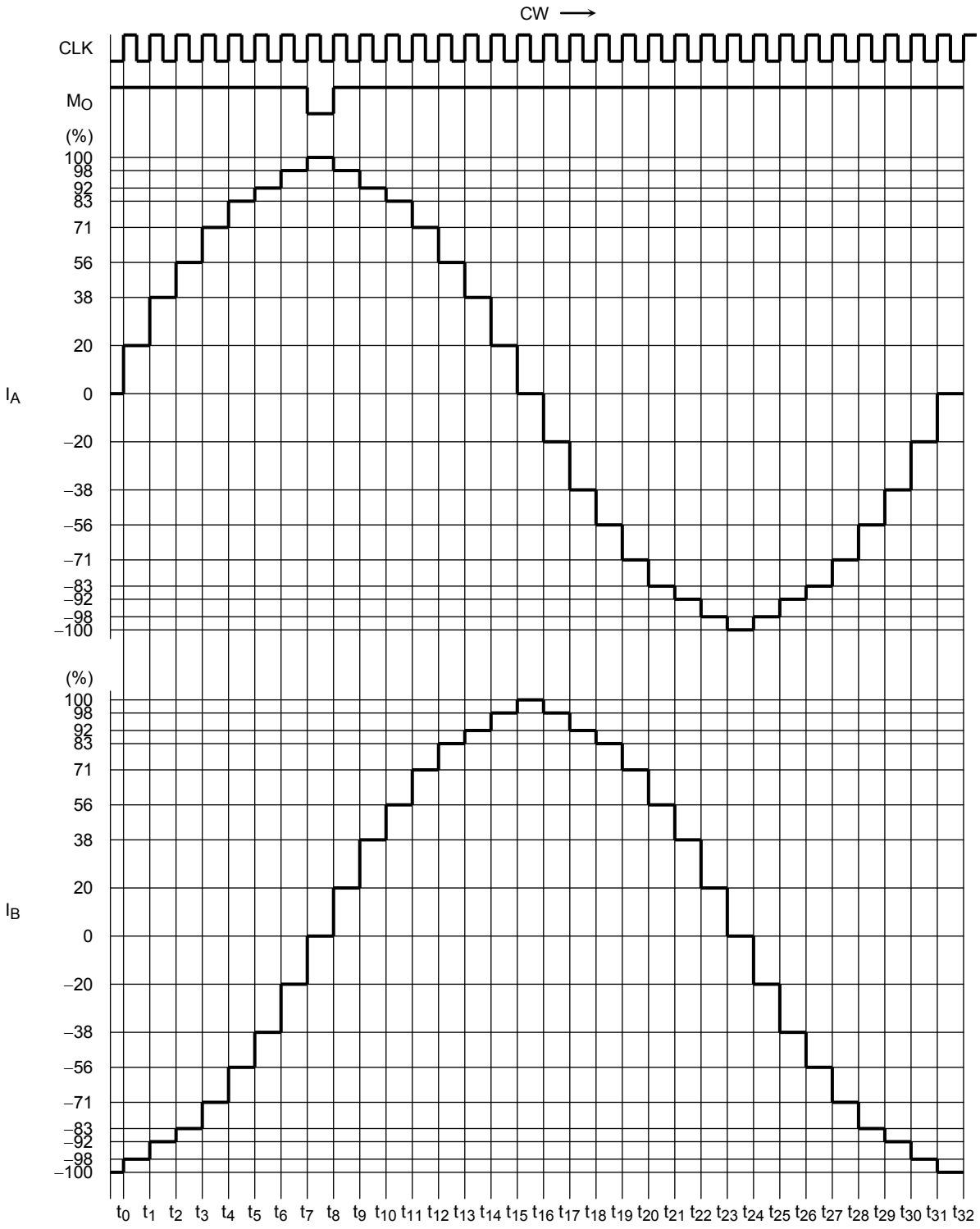

**4W1-2-Phase Excitation (M1: L, M2: H, CW Mode)**

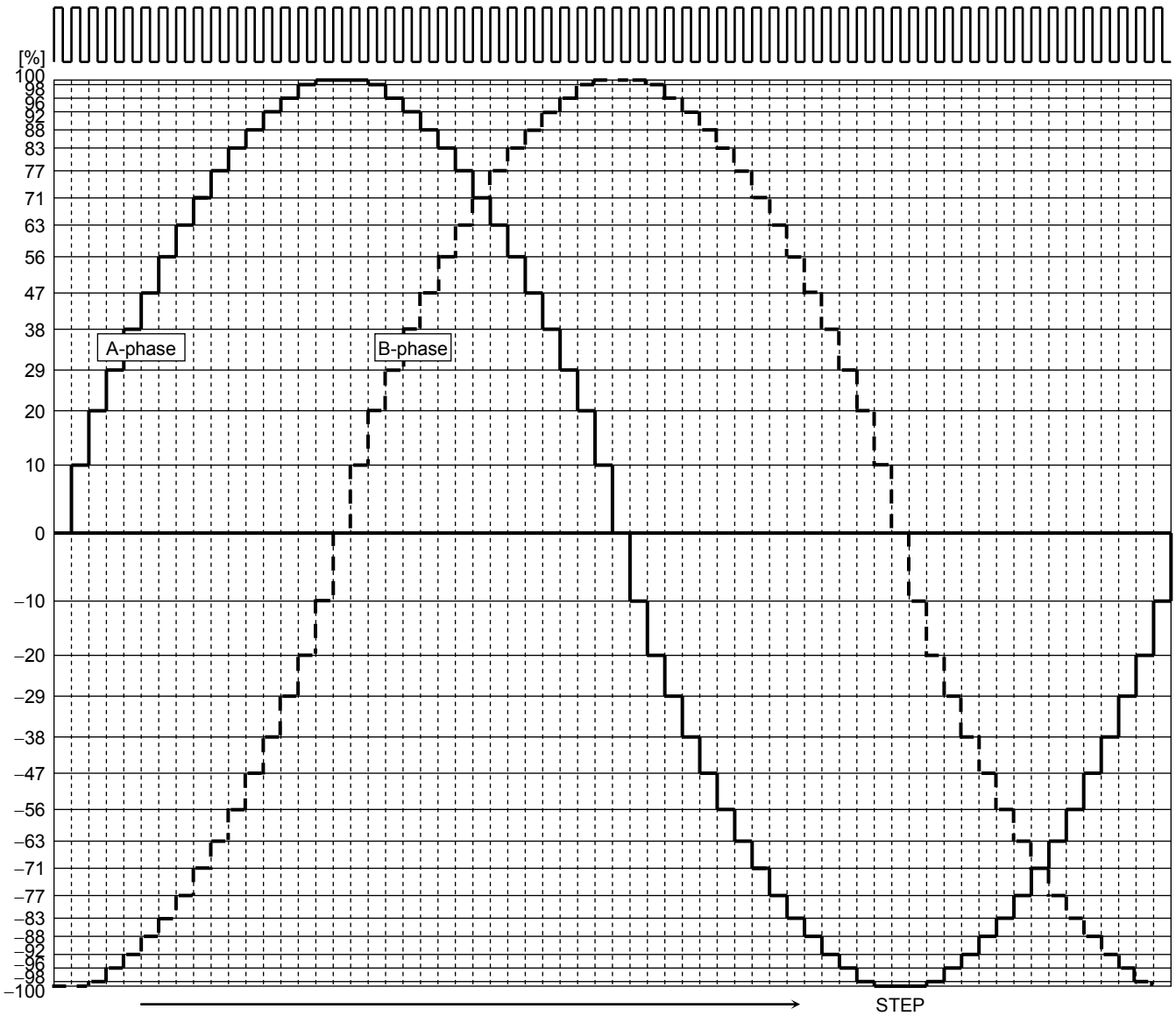

**<Input Signal Example>**

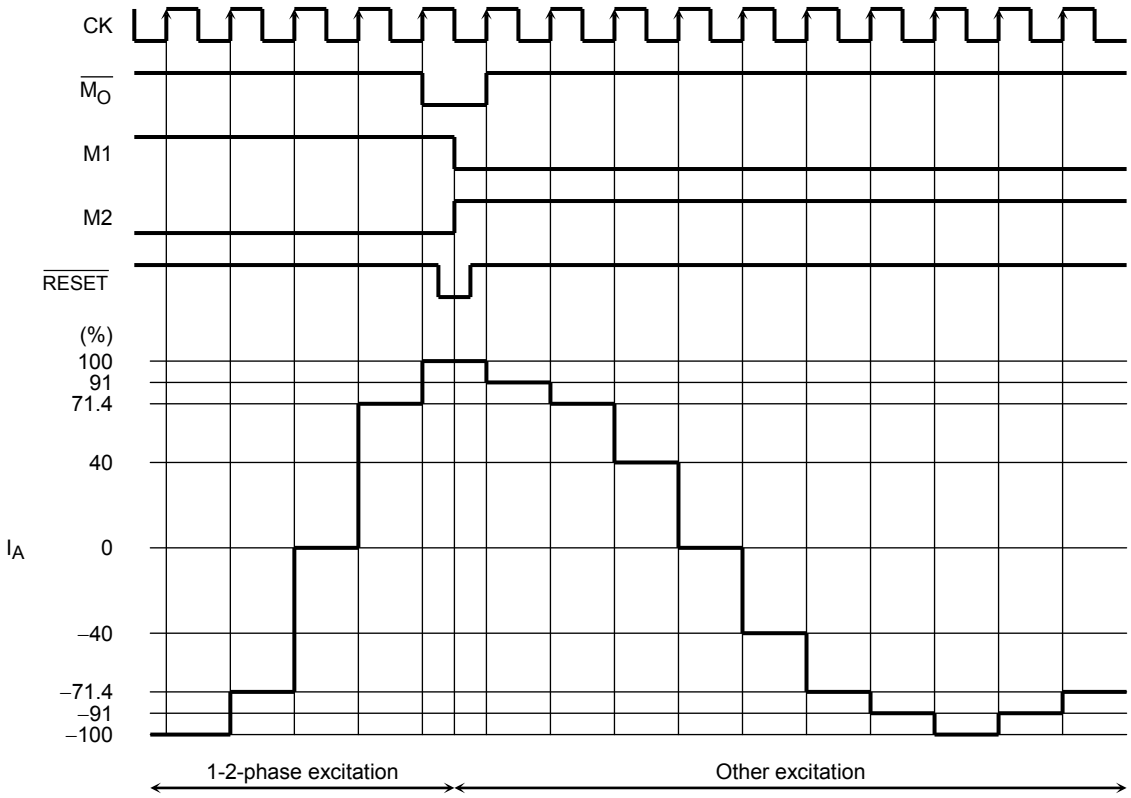


It is recommended that the state of the M1 and M2 pins be changed after setting the $\overline{RESET}$ signal Low during the Initial state ($M_O$ = Low). Even when the $M_O$ signal is Low, changing the M1 and M2 signals without setting the $\overline{RESET}$ signal Low may cause a discontinuity in the current waveform.

## 9. Current Waveforms and Mixed Decay Mode Settings

The current decay rate of the Decay mode operation can be determined by the DCY1 and DCY2 inputs for constant-current control.
The "NF" refers to the point at which the output current reaches its predefined current level, and the "RNF" refers to the monitoring timing of the predefined current.
The smaller the MDT value, the smaller the current ripple amplitude. However, the current decay rate decreases.

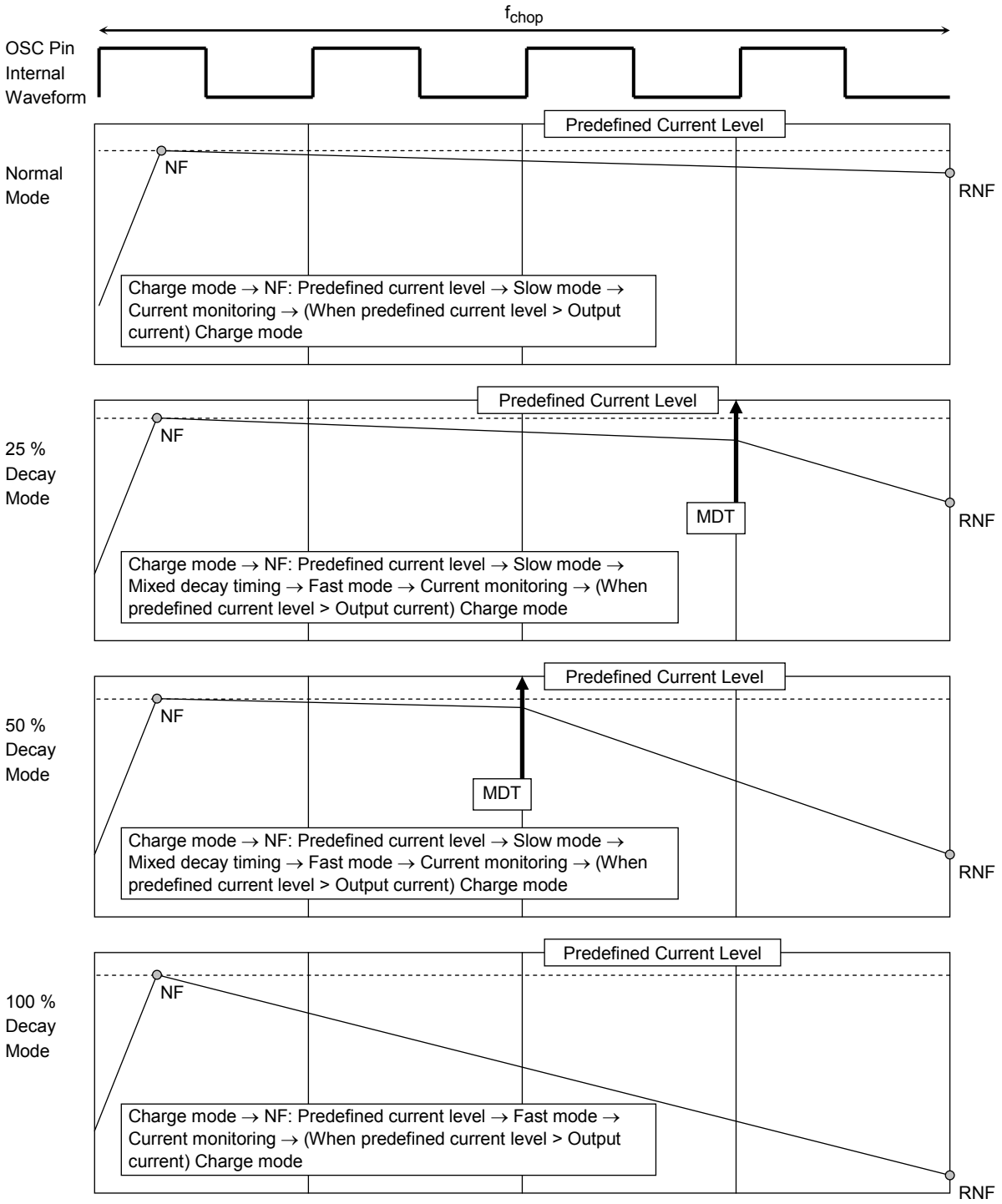

## 10. Current Control Modes (Effects of Decay Modes)

- Increasing the current (sine wave)

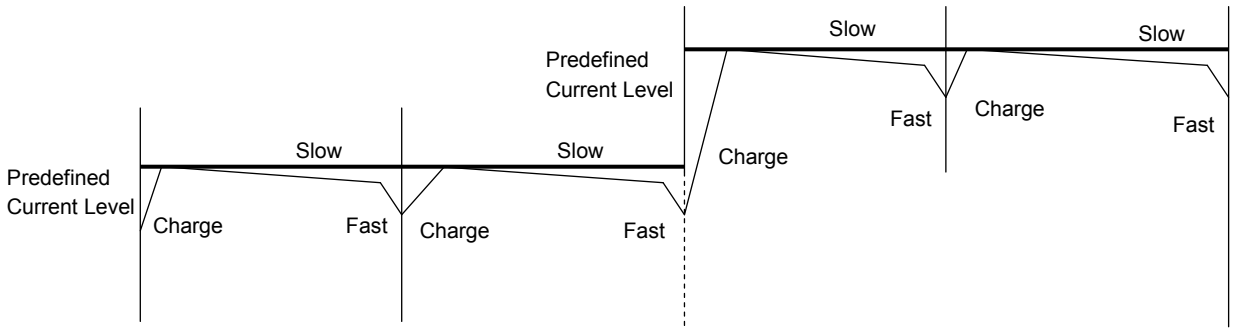


- Decreasing the current with a high decay rate (The current decay rate in Mixed Decay mode is the ratio between the time in Fast-Decay mode (discharge time after MDT) and the remainder of the period.)

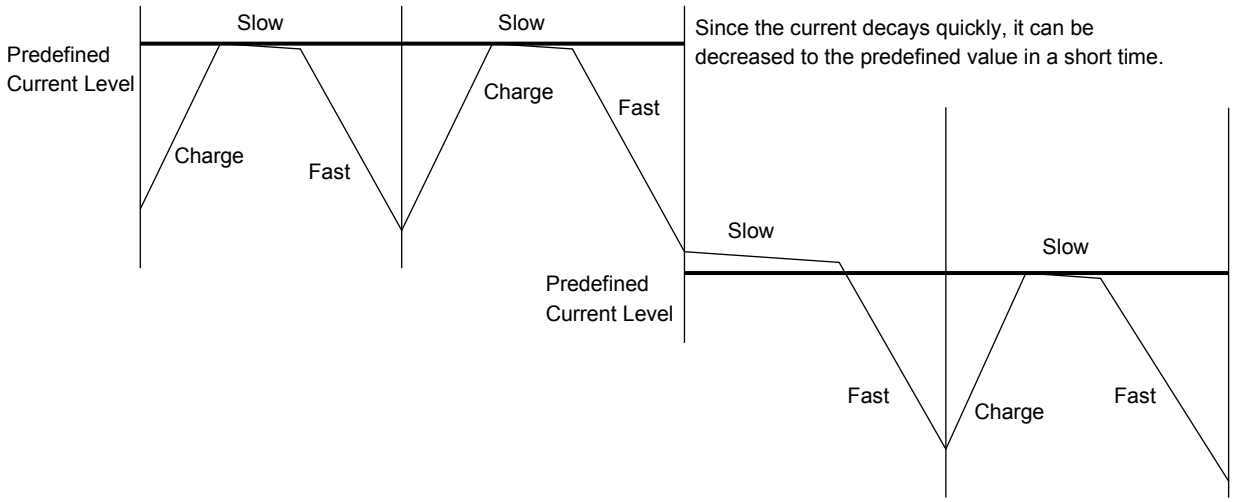


- Decreasing the current with a low decay rate (The current decay rate in Mixed Decay mode is the ratio between the time in Fast-Decay mode (discharge time after MDT) and the remainder of the period.)

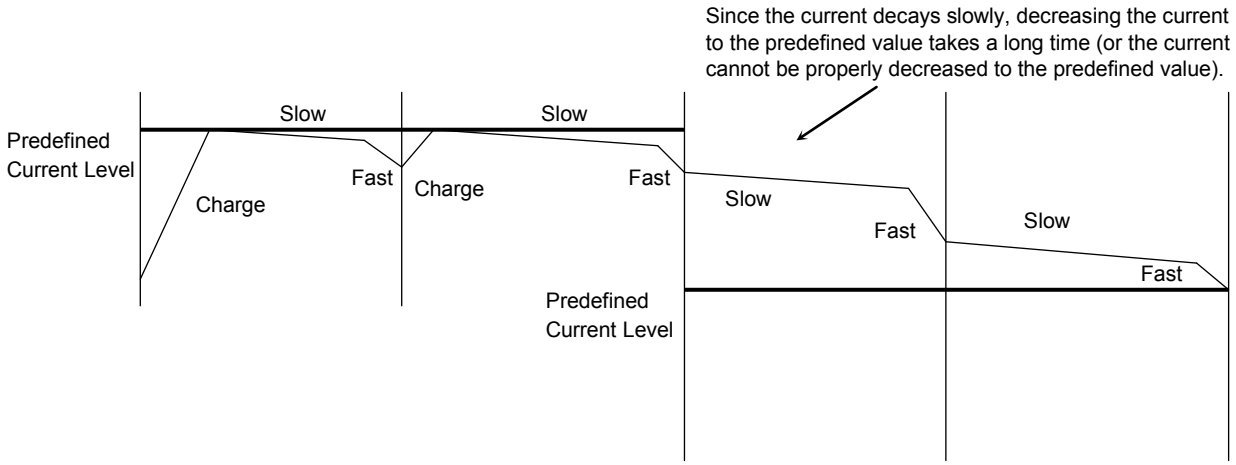


During Mixed Decay and Fast Decay modes, if the predefined current level is less than the output current at the RNF (current monitoring point), the Charge mode in the next chopping cycle will disappear (though the current control mode is briefly switched to Charge mode in actual operations for current sensing) and the current is controlled in Slow and Fast Decay modes (mode switching from Slow Decay mode to Fast Decay mode at the MDT point).

Note: The above figures are rough illustration of the output current. In actual current waveforms, transient response curves can be observed.

## 11. Current Waveforms in Mixed Decay Mode

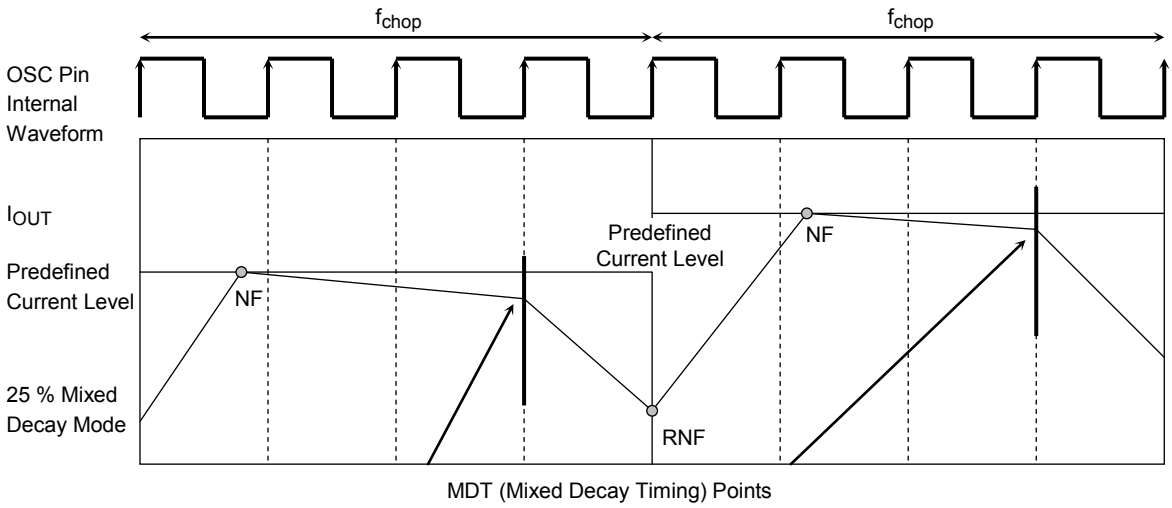


- When the NF points come after Mixed Decay Timing points

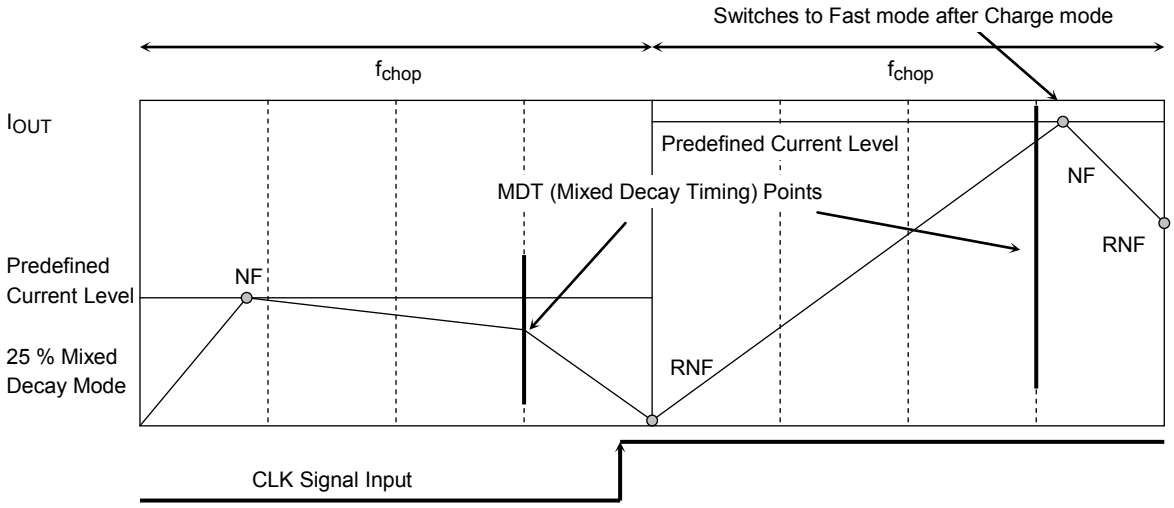


- When the output current value > predefined current level in Mixed Decay mode

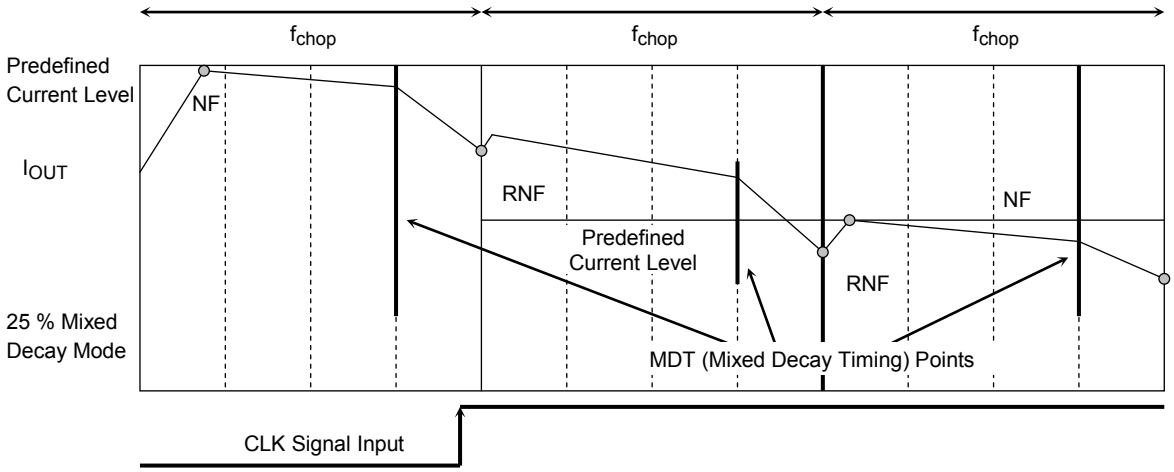


*: Even if the output current rises above the predefined current at the RNF point, the current control mode is briefly switched to Charge mode for current sensing.

## 12. Current Waveform in Fast Decay Mode

After the output current to the load reaches the current value specified by RNF, torque or other means, the output current to the load will be fed back to the power supply fully in Fast Decay mode.

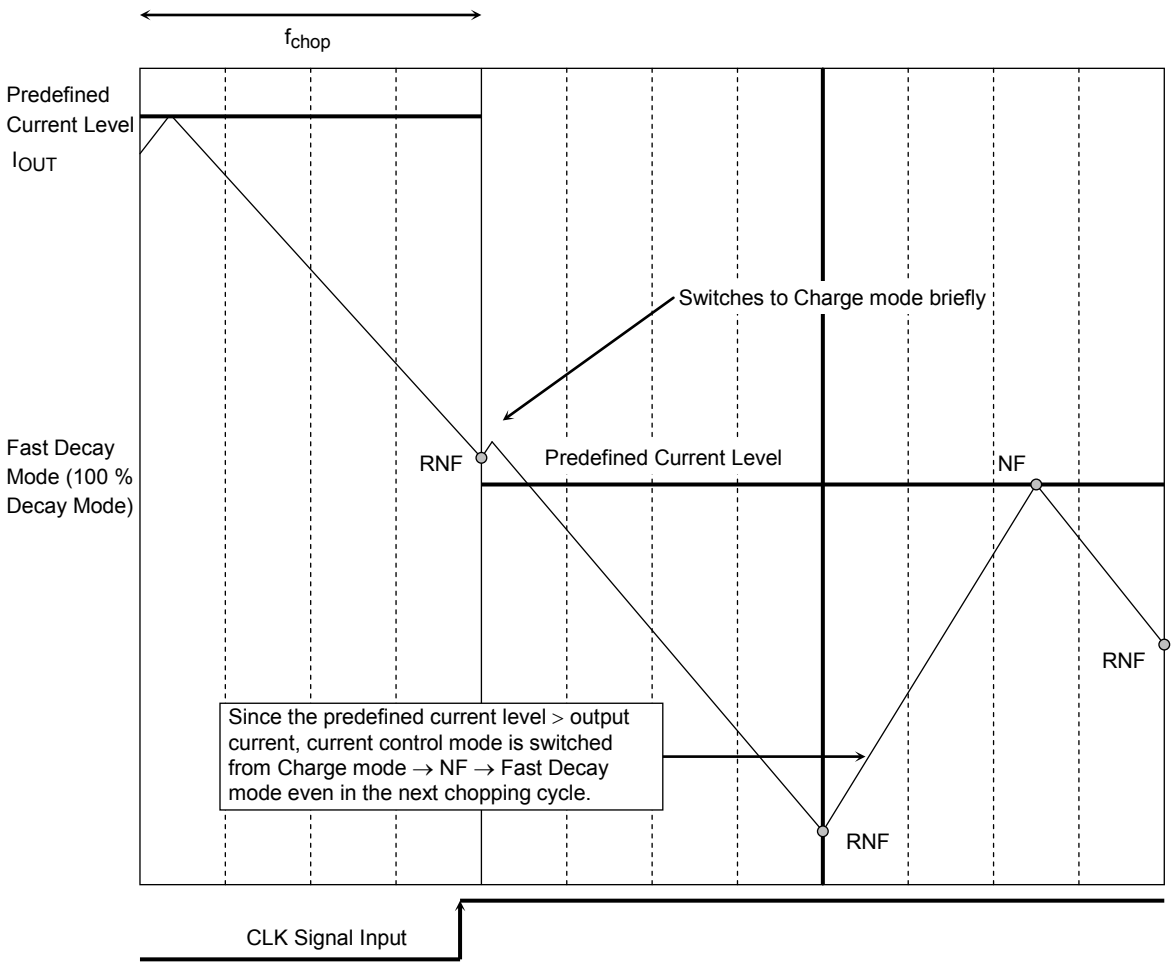

## 13. CLK and Internal OSC Signals and Output Current Waveform (when the CLK signal is asserted during Slow Decay mode)

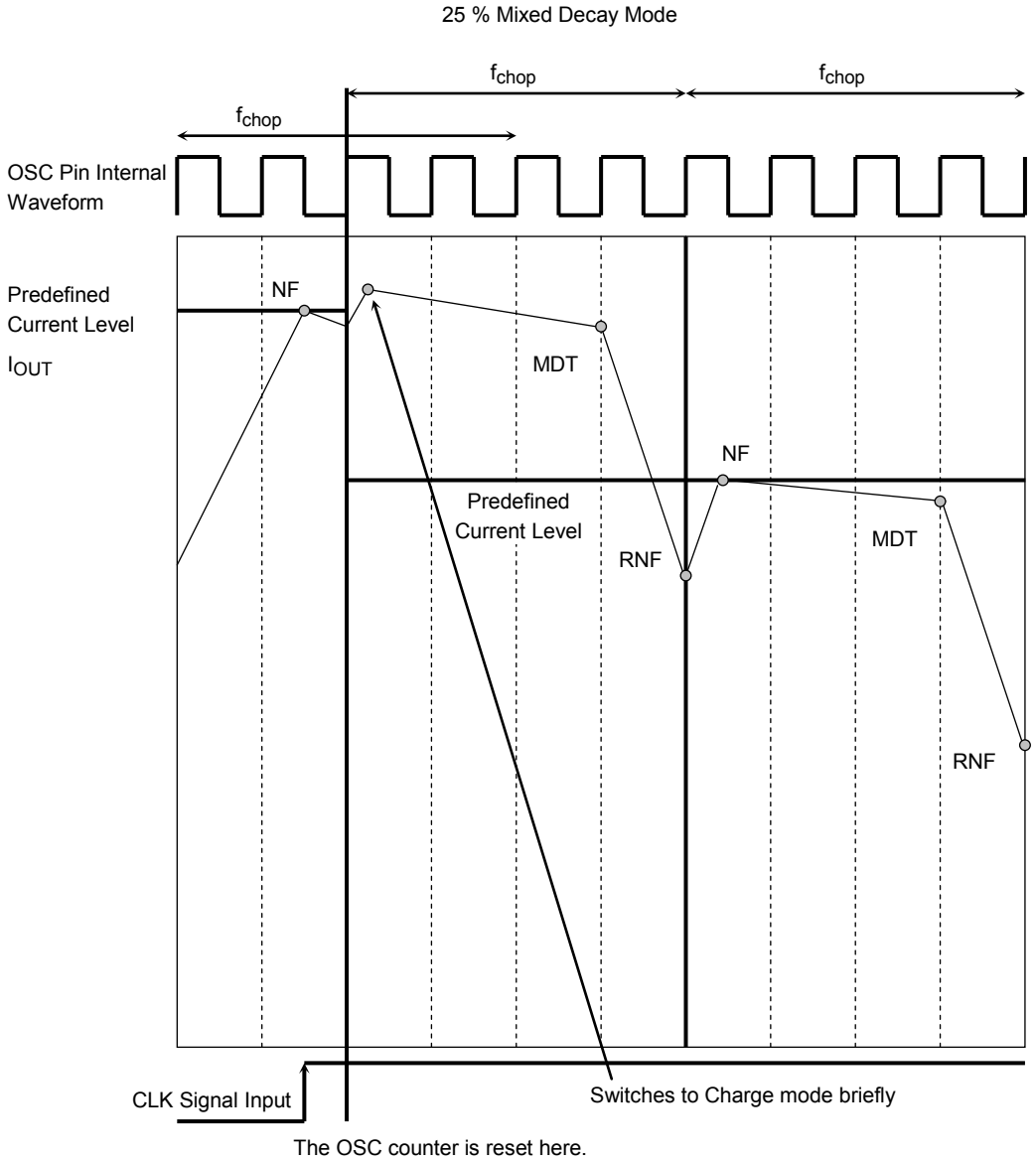


When the CLK signal is asserted, the Chopping Counter (OSC Counter) is forced to reset at the next rising edge of the OSC signal.
As a result, the response to input data is faster compared to methods in which the counter is not reset.
The delay time that is theoretically determined by the logic circuit is one OSC cycle = 10 μs at a 100-kHz chopping rate.
After the OSC Counter is reset by the CLK signal input, the current control mode is invariably switched to Charge mode briefly for current sensing.

Note: Even in Fast Decay mode, the current control mode is invariably switched to Charge mode briefly for current sensing.

**14. CLK and Internal OSC Signals and Output Current Waveform (when the CLK signal is asserted during Charge mode)**

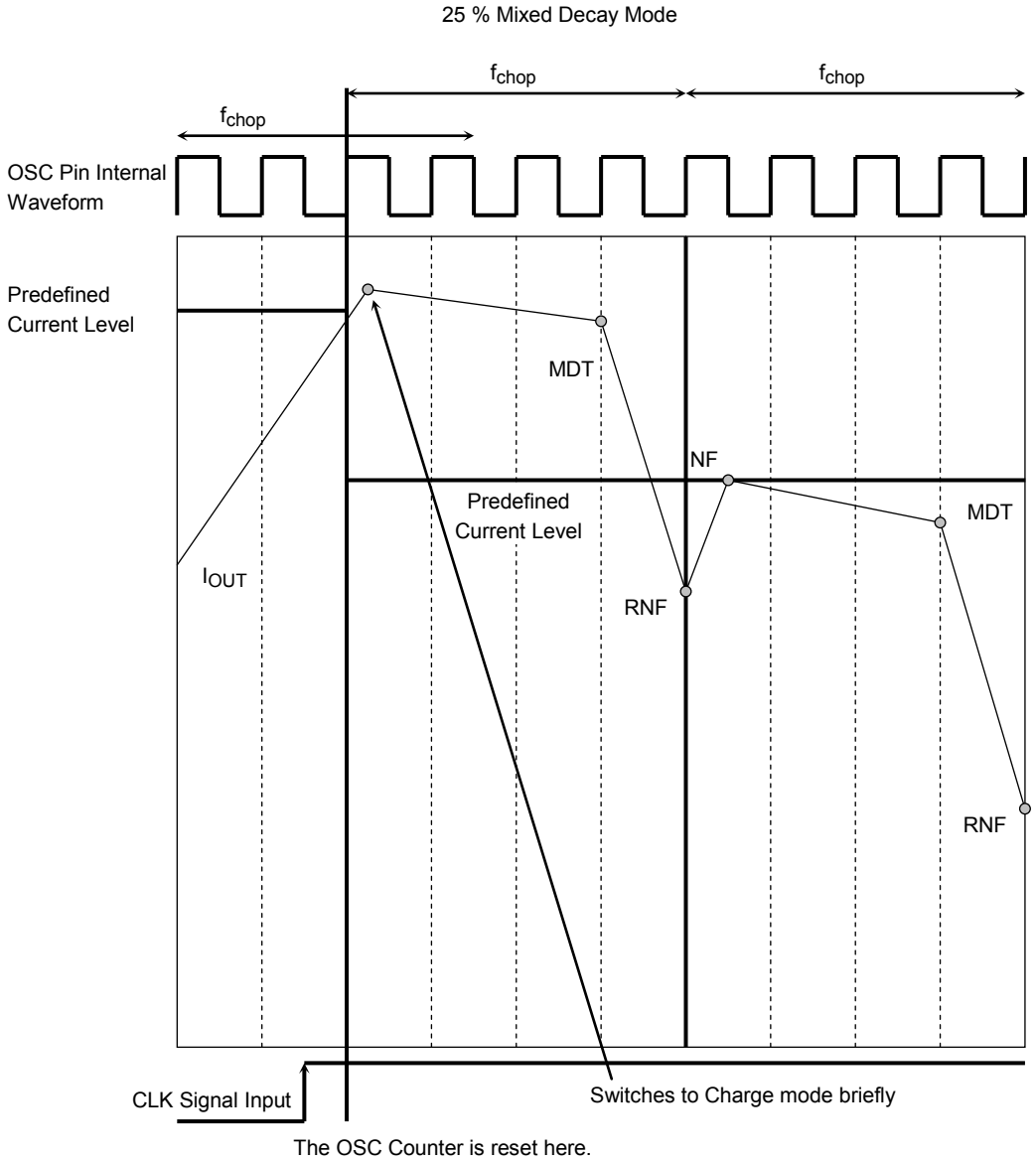

**15. CLK and Internal OSC Signals and Output Current Waveform (when the CLK signal is asserted during Fast Decay mode)**

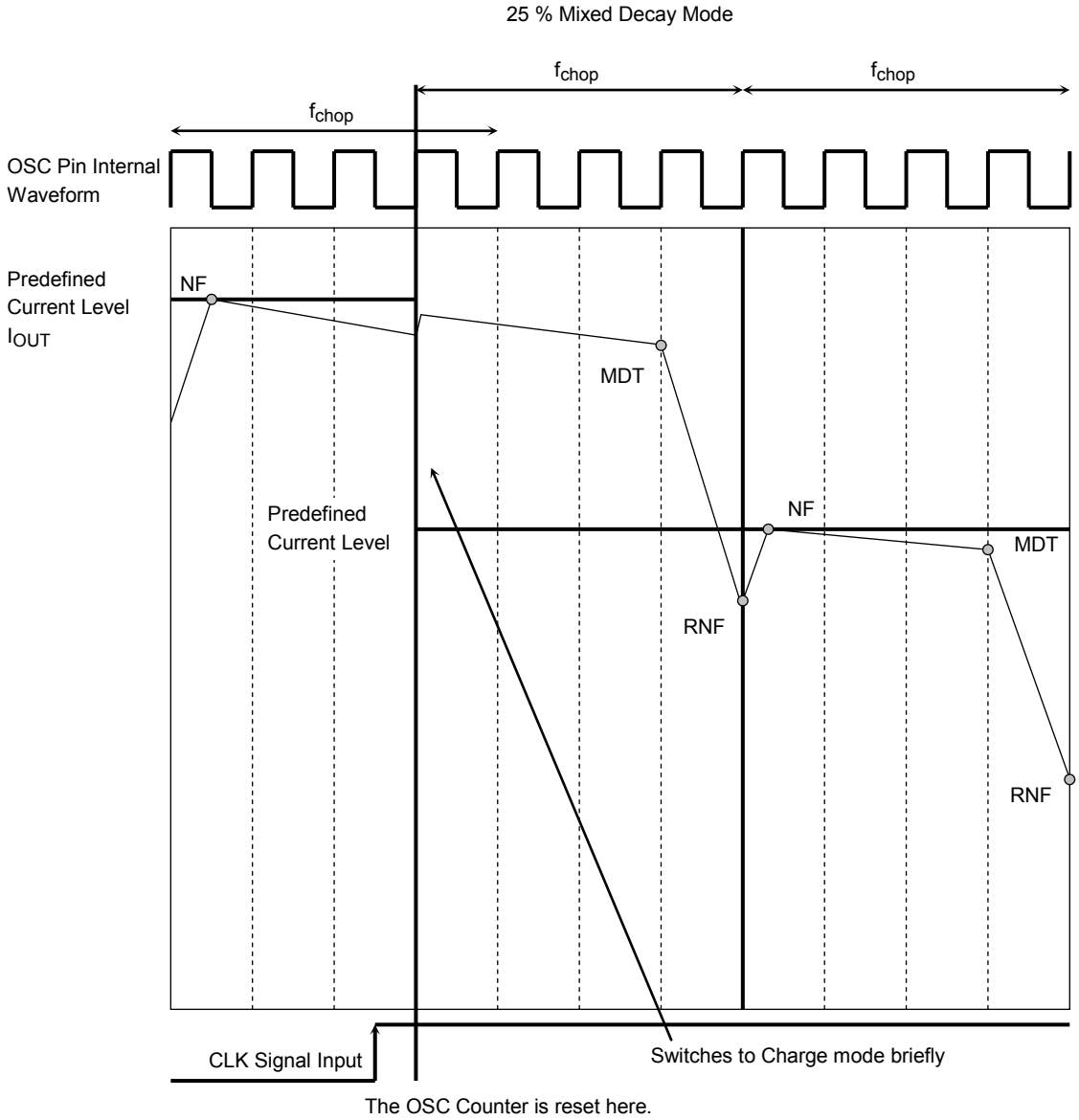

**16. Internal OSC Signal and Output Current Waveform when Predefined Current is Changed from Positive to Negative (when the CLK signal is input using 2-phase excitation)**

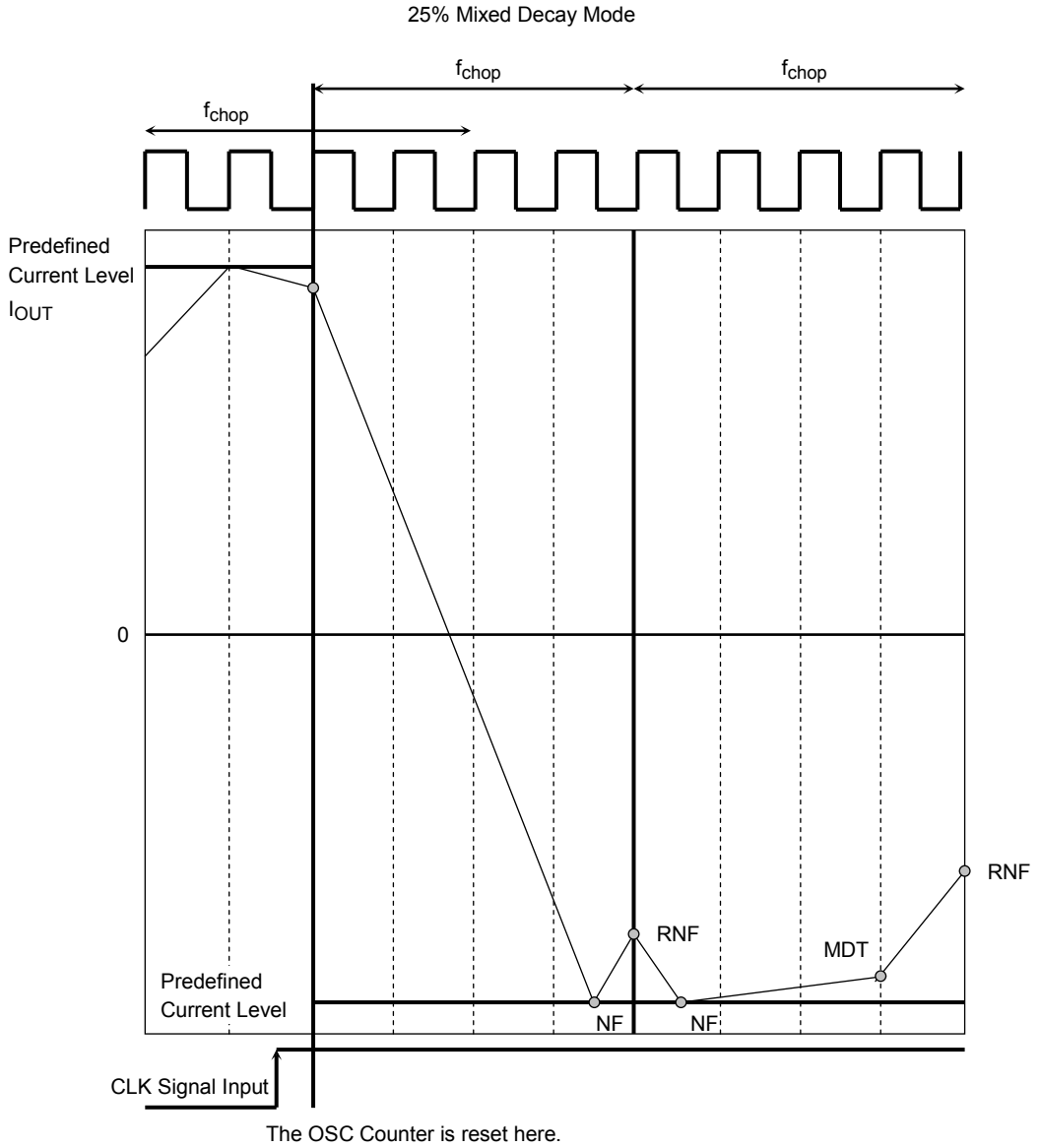

## Current Discharge Path when ENABLE is Set as Low During Operation

When all the output transistors are forced off during Slow Decay mode, the coil energy is discharged in the following modes:

Note: Parasitic diodes are located on dotted lines. However, they are not normally used in normal Mixed Decay mode.

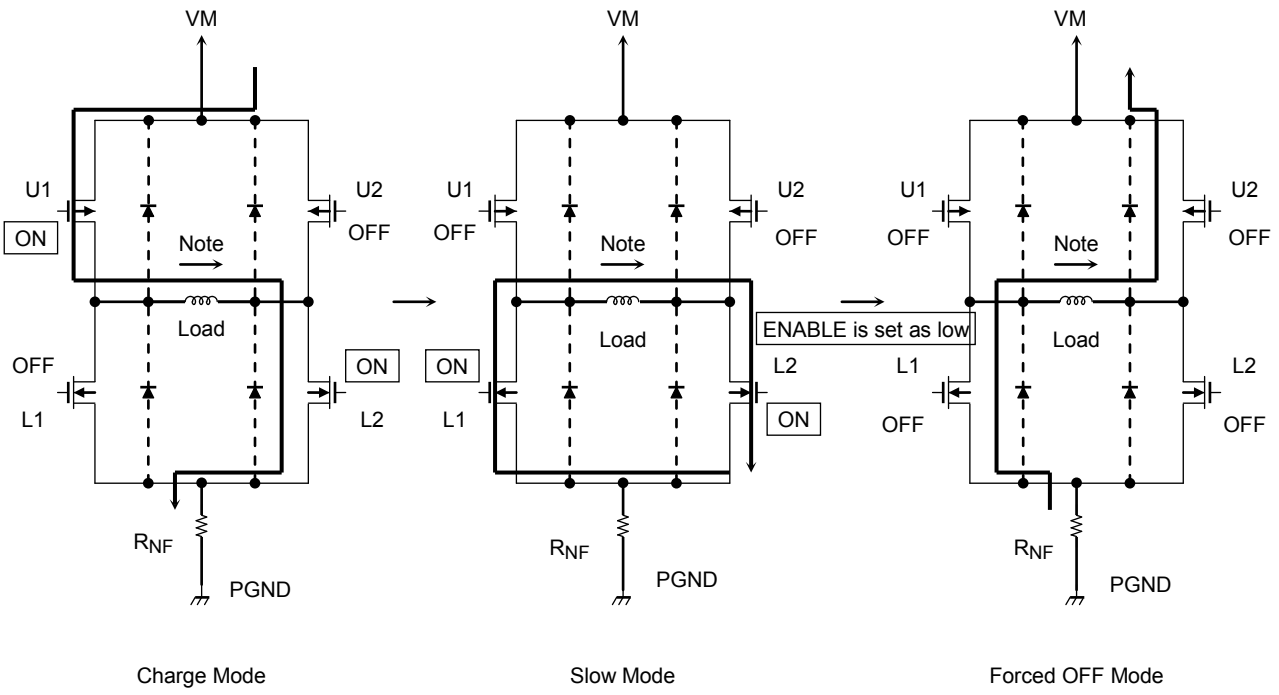


As shown in the figure above, output transistors have parasitic diodes.

Normally, when the energy of the coil is discharged, each transistor is turned on allowing the current to flow in the reverse direction to that in normal operation; as a result, the parasitic diodes are not used. However, when all the output transistors are forced off, the coil energy is discharged via the parasitic diodes.

## Output Transistor Operating Modes

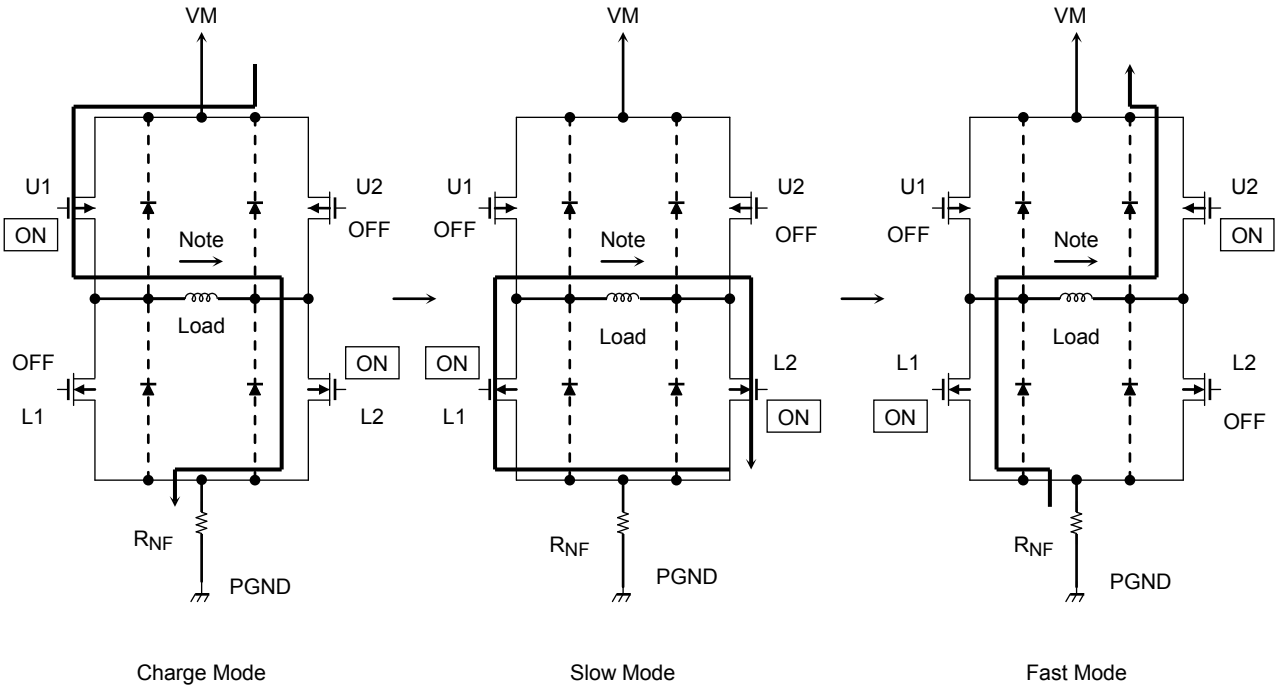


## Output Transistor Operating Modes

| CLK | U1 | U2 | L1 | L2 |
|---|---|---|---|---|
| Charge | ON | OFF | OFF | ON |
| Slow Decay | OFF | OFF | ON | ON |
| Fast Decay | OFF | ON | ON | OFF |

Note: This table shows an example of when the current flows as indicated by the arrows in the above figures. If the current flows in the opposite direction, refer to the following table:

| CLK | U1 | U2 | L1 | L2 |
|---|---|---|---|---|
| Charge | OFF | ON | ON | OFF |
| Slow Decay | OFF | OFF | ON | ON |
| Fast Decay | ON | OFF | OFF | ON |

Upon transitions of above-mentioned modes, a dead time of about 300 ns is inserted between each mode respectively.

## Test Points for AC Specifications

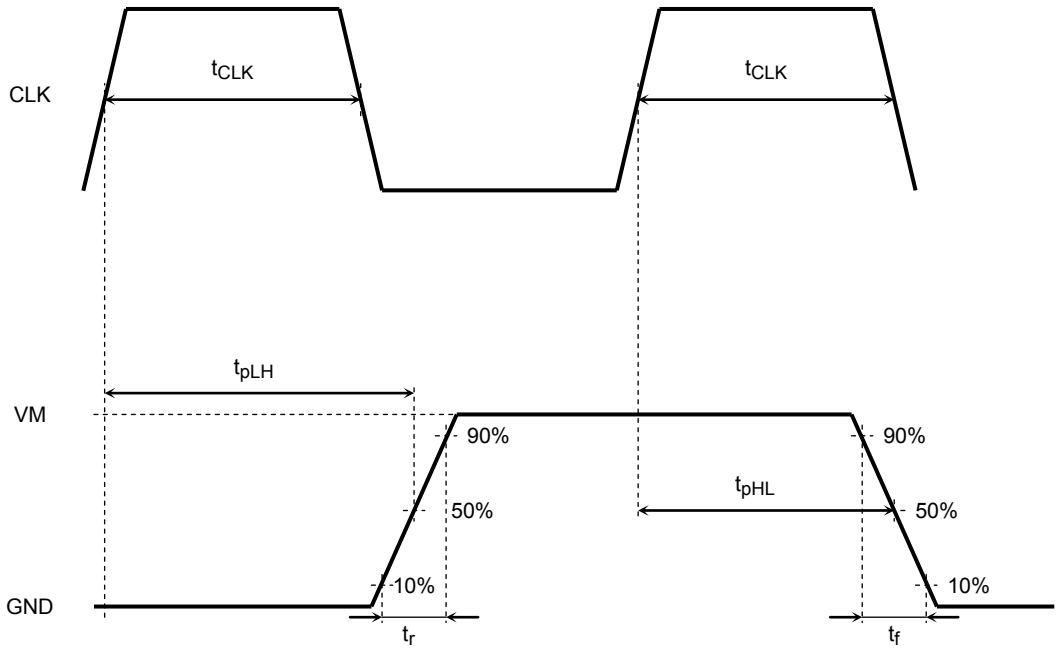


**Figure 1 Timing Waveforms and Symbols**

OSC-Charge DELAY:

The OSC waveform is converted into the internal OSC waveform by checking the level of a chopping wave. The internal OSC signal is designed to be logic High when the OSC voltage is at 2 V or above, and to be logic Low when the OSC voltage is at 0.5 V or below. However, there is a response delay and that there occurs a peak-to-peak voltage variation.

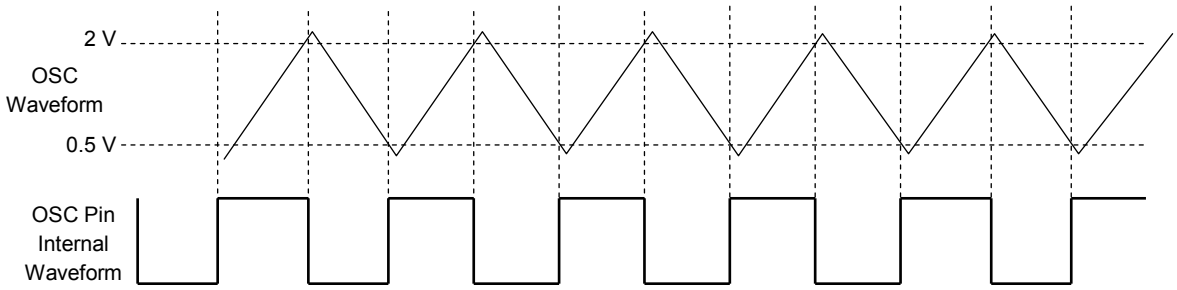


**Figure 2 Timing Waveforms (OSC Signal)**

## Power Dissipation

### TB6560AHQ

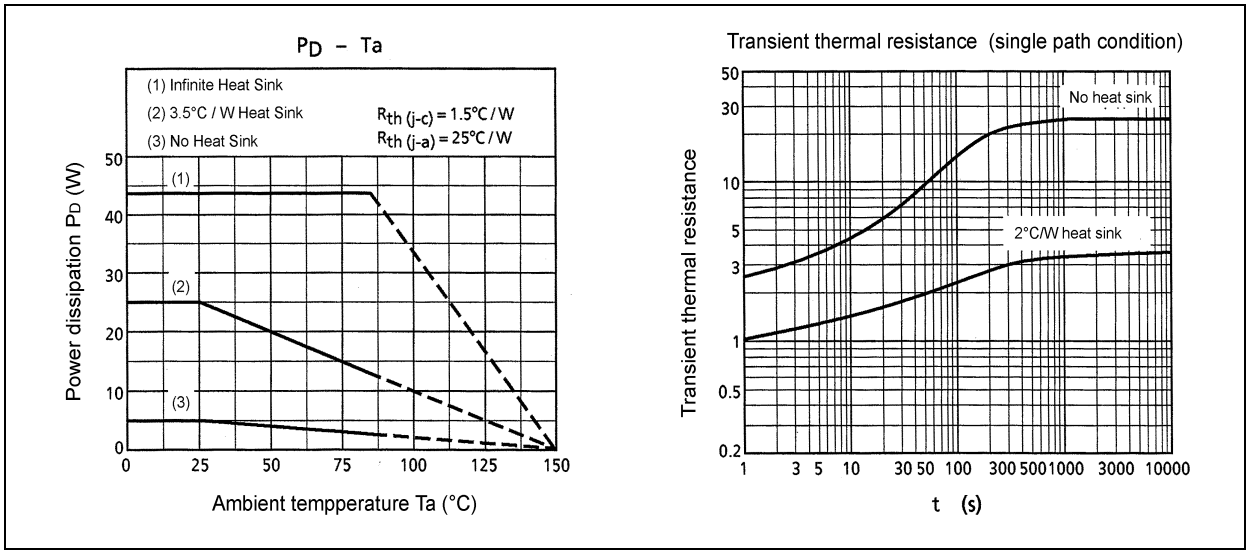


### TB6560AFG

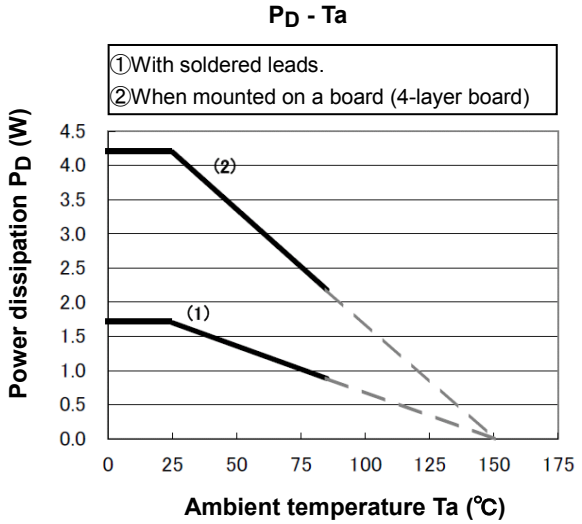

## 1. Power-on Sequence with Control Input Signals

Turn on $V_{DD}$. Then, when the $V_{DD}$ voltage has stabilized, turn on $VM_{A/B}$.
Hold the control input pins Low while turning on $V_{DD}$ and $VM_{A/B}$.
(All the control input pins are internally pulled down.)
After $V_{DD}$ and $VM_{A/B}$ completely stabilizes at the rated voltages, the $\overline{RESET}$ and ENABLE pins can be set High. If this sequence is not properly followed, the IC may not operate correctly, or the IC and the peripheral parts may be damaged.
When $\overline{RESET}$ is released High, the CLK signal is applied and excitation is started. Only after ENABLE is also set High, outputs are enabled. When only $\overline{RESET}$ is set High, outputs are disabled and only the internal counter advances. Likewise, when only ENABLE is set High, the excitation will not be performed even if the CLK signal is applied and the outputs will remain in the initial state.
An example of a control input sequence is shown below.
A power-off sequence should be the reverse of this sequence.

<Recommended Control Input Sequence>

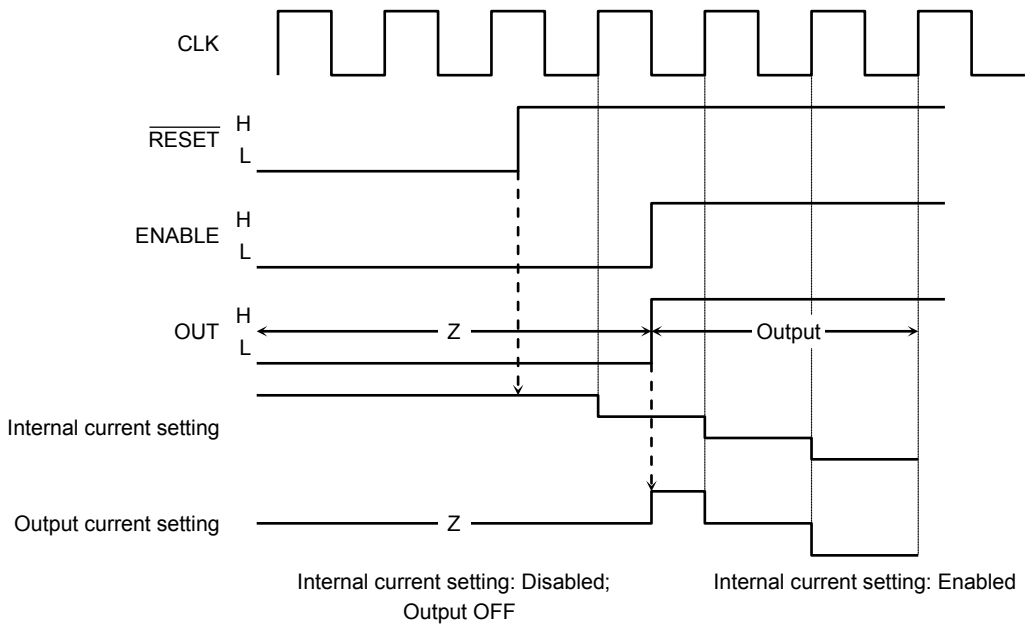


## 2. Power Dissipation

The power dissipation of the IC can be calculated by the following equation:

$P = V_{DD} \times I_{DD} + I_{OUT} \times I_{OUT} \times Ron \times 2$ phases

The higher the ambient temperature, the smaller the power dissipation.
Examine the PD-$T_a$ characteristic curve to determine if there is a sufficient margin in the thermal design.

## 3. Treatment of Heat-Radiating Fin

The heat-radiating fin pins of the TB6560AHQ/AFG (backside) are electrically connected to the backside of the die. Thus, if a current flows to the fin, the IC may malfunction. If there is any possibility of a voltage being generated between grounds and the fin, the fin pins should either be connected to ground or insulated.

## 4. Thermal Shutdown (TSD)

When the die temperature reaches 170°C (typ.), the thermal shutdown circuit is tripped, switching the outputs to off. There is a variation of about ±20°C in the temperature at which the thermal shutdown circuit is tripped.

## Application Circuit Example

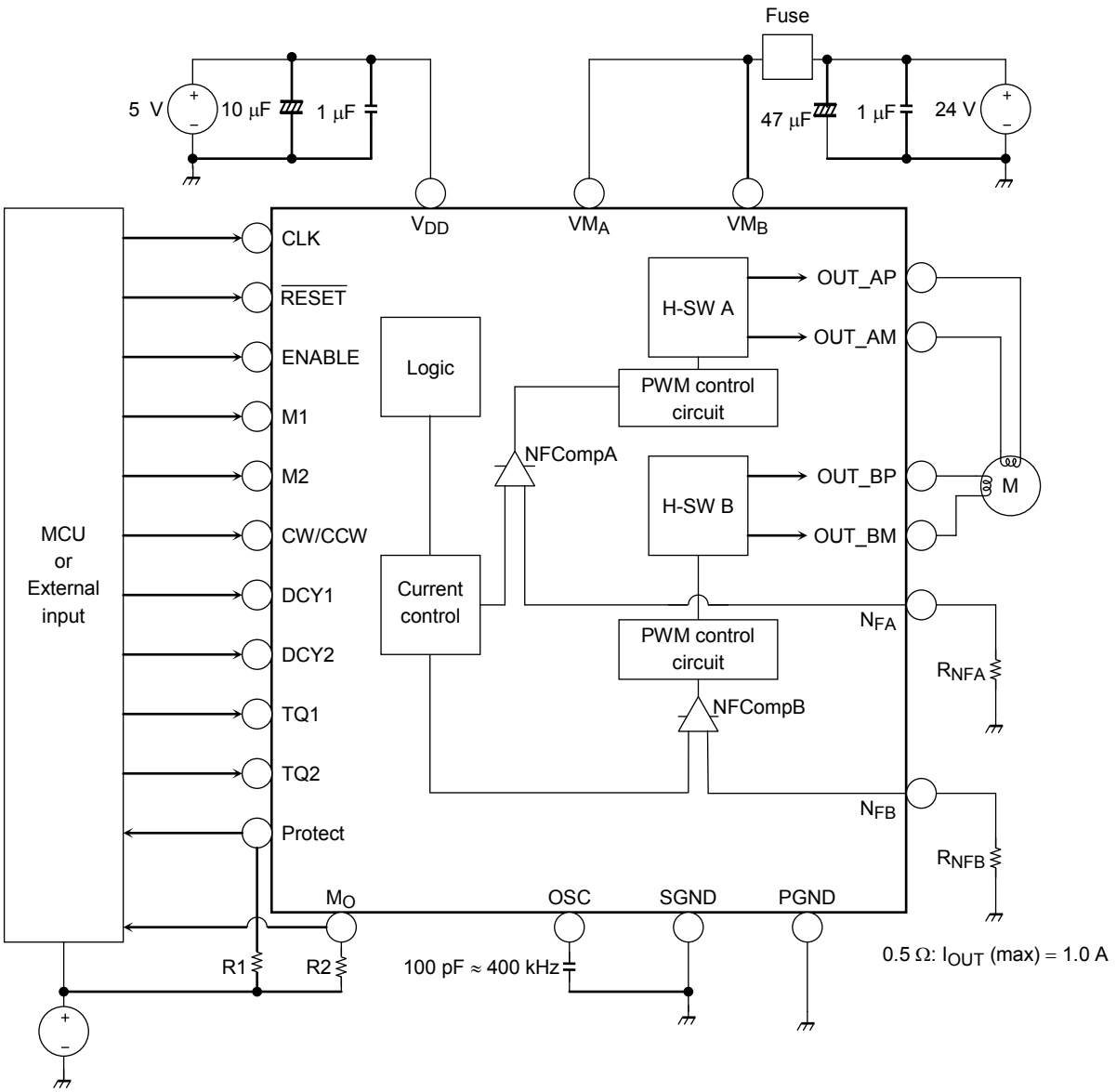


Note: Capacitors for the power supply lines should be connected as close to the IC as possible.

Usage Considerations

- A large current might abruptly flow through the IC in case of a short-circuit across its outputs, a short-circuit to power supply or a short-circuit to ground, leading to a damage of the IC. Also, the IC or peripheral parts may be permanently damaged or emit smoke or fire resulting in injury especially if a power supply pin ($V_{DD}$, $VM_A$, $VM_B$) or an output pin (OUT_AP, OUT_AM, OUT_BP, OUT_BM) is short-circuited to adjacent or any other pins. These possibilities should be fully considered in the design of the output, $V_{DD}$, VM, and ground lines.
- A fuse should be connected to the power supply line. The rated maximum current of the TB6560AHQ is 3.5 A/phase and that of the TB6560AFG is 2.5 A/phase. Considering those maximum ratings, an appropriate fuse must be selected depending on operating conditions of a motor to be used. Toshiba recommends that a fast-blow fuse be used.
- The power-on sequence described on page 28 must be properly followed.
- If a voltage outside the operating range specified on page 6 ($4.5 \leq V_{DD} \leq 5.5$, $4.5 \leq VM_{A/B} \leq 34$, $V_{DD} \leq VM_{A/B}$) is applied, the IC may not operate properly or the IC and peripheral parts may be permanently damaged. Ensure that the voltage range does not exceed the upper and lower limits of the specified range.

## Package Dimensions

HZIP25-P-1.27 Unit : mm

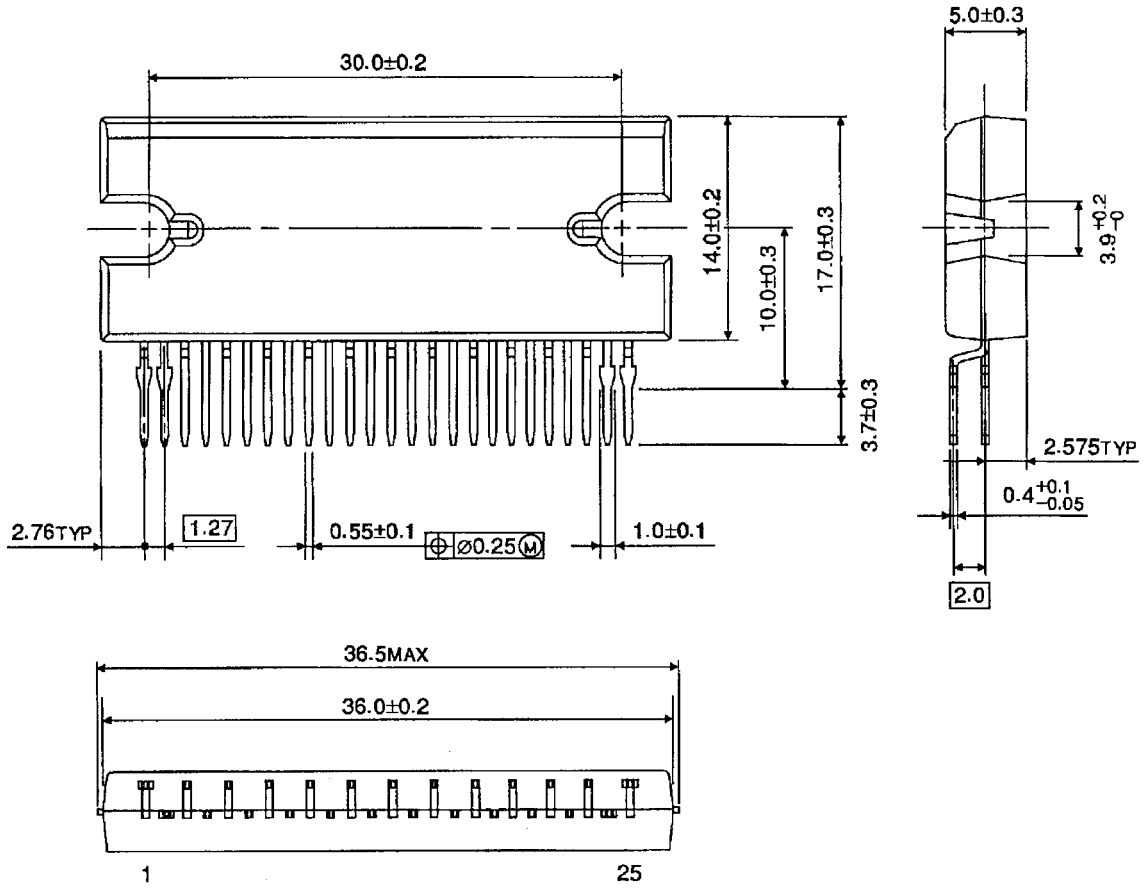


Weight: 9.86 g (typ.)

## Package Dimensions

HQFP64-P-1010-0.50 Unit : mm

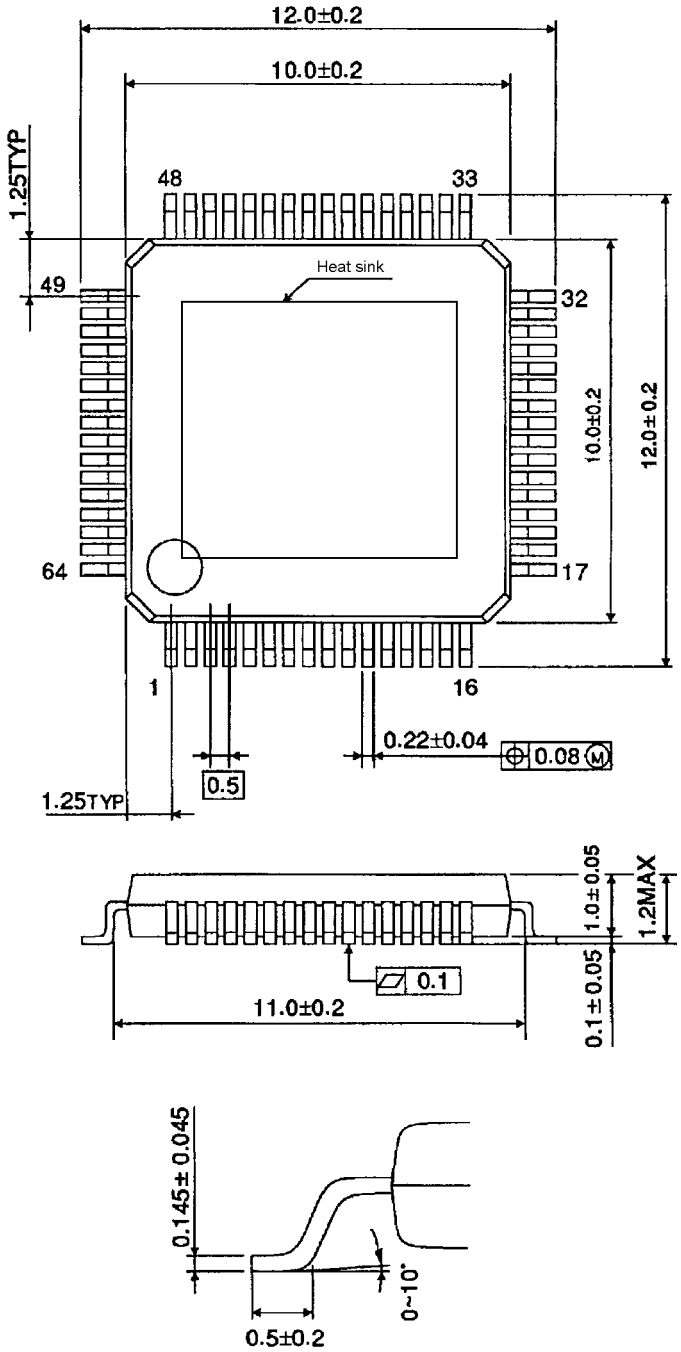


Weight: 0.26 g (typ.)

Note: The size of a backside heatsink is 5.5 mm × 5.5 mm.

## Notes on Contents

### 1. Block Diagrams

Some of the functional blocks, circuits, or constants in the block diagram may be omitted or simplified for explanatory purposes.

### 2. Equivalent Circuits

The equivalent circuit diagrams may be simplified or some parts of them may be omitted for explanatory purposes.

### 3. Timing Charts

Timing charts may be simplified for explanatory purposes.

### 4. Application Circuits

The application circuits shown in this document are provided for reference purposes only. Thorough evaluation is required, especially at the mass production design stage.
Toshiba does not grant any license to any industrial property rights by providing these examples of application circuits.

### 5. Test Circuits

Components in the test circuits are used only to obtain and confirm the device characteristics. These components and circuits are not guaranteed to prevent malfunction or failure from occurring in the application equipment.

## IC Usage Considerations

### Notes on Handling of ICs

(1) The absolute maximum ratings of a semiconductor device are a set of ratings that must not be exceeded, even for a moment. Do not exceed any of these ratings.
Exceeding the rating(s) may cause the device breakdown, damage or deterioration, and may result injury by explosion or combustion.

(2) Use an appropriate power supply fuse to ensure that a large current does not continuously flow in case of over current and/or IC failure. The IC will fully break down when used under conditions that exceed its absolute maximum ratings, when the wiring is routed improperly or when an abnormal pulse noise occurs from the wiring or load, causing a large current to continuously flow and the breakdown can lead smoke or ignition. To minimize the effects of the flow of a large current in case of breakdown, appropriate settings, such as fuse capacity, fusing time and insertion circuit location, are required.

(3) If your design includes an inductive load such as a motor coil, incorporate a protection circuit into the design to prevent device malfunction or breakdown caused by the current resulting from the inrush current at power ON or the negative current resulting from the back electromotive force at power OFF. IC breakdown may cause injury, smoke or ignition.
Use a stable power supply with ICs with built-in protection functions. If the power supply is unstable, the protection function may not operate, causing IC breakdown. IC breakdown may cause injury, smoke or ignition.

(4) Do not insert devices in the wrong orientation or incorrectly.
Make sure that the positive and negative terminals of power supplies are connected properly. Otherwise, the current or power consumption may exceed the absolute maximum rating, and exceeding the rating(s) may cause the device breakdown, damage or deterioration, and may result injury by explosion or combustion.
In addition, do not use any device that is applied the current with inserting in the wrong orientation or incorrectly even just one time.

## Points to Remember on Handling of ICs

(1) Thermal Shutdown Circuit
Thermal shutdown circuits do not necessarily protect ICs under all circumstances. If the thermal shutdown circuits operate against the over temperature, clear the heat generation status immediately.
Depending on the method of use and usage conditions, such as exceeding absolute maximum ratings can cause the thermal shutdown circuit to not operate properly or IC breakdown before operation.

(2) Heat Radiation Design
In using an IC with large current flow such as power amp, regulator or driver, please design the device so that heat is appropriately radiated, not to exceed the specified junction temperature ($T_J$) at any time and condition. These ICs generate heat even during normal use. An inadequate IC heat radiation design can lead to decrease in IC life, deterioration of IC characteristics or IC breakdown. In addition, please design the device taking into considerate the effect of IC heat radiation with peripheral components.

(3) Back-EMF
When a motor rotates in the reverse direction, stops or slows down abruptly, a current flow back to the motor's power supply due to the effect of back-EMF. If the current sink capability of the power supply is small, the device's motor power supply and output pins might be exposed to conditions beyond maximum ratings. To avoid this problem, take the effect of back-EMF into consideration in system design.

(4) Short-Circuits
The IC may be permanently damaged in case of a short-circuit across its outputs, a short-circuit to power supply or a short-circuit to ground. These possibilities should be fully considered in the design of the output, $V_{DD}$, VM and ground lines.

(5) Short-Circuits between Adjacent Pins in the TB6560AHQ
In the TB6560AHQ, the term "adjacent pin" includes a pin diagonally closest to a given pin. For example, pin 3 has four adjacent pins: 1, 2, 4 and 5.
Depending on the specified voltage and current, a large current might abruptly flow through the TB6560AHQ in case of a short-circuit between any adjacent pins that are listed below. If the large current persists, it may lead to a smoke emission.

1) Pins 7 and 8
2) Pins 7 and 9
3) Pins 8 and 9
4) Pins 9 and 10
5) Pins 9 and 11
6) Pins 10 and 12
7) Pins 11 and 12
8) Pins 11 and 13
9) Pins 12 and 13
10) Pins 12 and 14
11) Pins 13 and 14
12) Pins 13 and 15
13) Pins 14 and 16
14) Pins 15 and 16
15) Pins 16 and 17
16) Pins 16 and 18
17) Pins 17 and 18
18) Pins 18 and 19
19) Pins 18 and 20

Therefore, to avoid a continuous overcurrent due to the above-described short-circuit and allow the TB6560AHQ/AFG to be fail-safe, an appropriate fuse should be added at the right place, or overcurrent shutdown circuitry should be added to the power supply. The rated current of a fuse may vary depending on actual applications and its characteristics. Thus, an appropriate fuse must be selected experimentally.

## RESTRICTIONS ON PRODUCT USE

- Toshiba Corporation, and its subsidiaries and affiliates (collectively "TOSHIBA"), reserve the right to make changes to the information in this document, and related hardware, software and systems (collectively "Product") without notice.

- This document and any information herein may not be reproduced without prior written permission from TOSHIBA. Even with TOSHIBA's written permission, reproduction is permissible only if reproduction is without alteration/omission.

- Though TOSHIBA works continually to improve Product's quality and reliability, Product can malfunction or fail. Customers are responsible for complying with safety standards and for providing adequate designs and safeguards for their hardware, software and systems which minimize risk and avoid situations in which a malfunction or failure of Product could cause loss of human life, bodily injury or damage to property, including data loss or corruption. Before customers use the Product, create designs including the Product, or incorporate the Product into their own applications, customers must also refer to and comply with (a) the latest versions of all relevant TOSHIBA information, including without limitation, this document, the specifications, the data sheets and application notes for Product and the precautions and conditions set forth in the "TOSHIBA Semiconductor Reliability Handbook" and (b) the instructions for the application with which the Product will be used with or for. Customers are solely responsible for all aspects of their own product design or applications, including but not limited to (a) determining the appropriateness of the use of this Product in such design or applications; (b) evaluating and determining the applicability of any information contained in this document, or in charts, diagrams, programs, algorithms, sample application circuits, or any other referenced documents; and (c) validating all operating parameters for such designs and applications. **TOSHIBA ASSUMES NO LIABILITY FOR CUSTOMERS' PRODUCT DESIGN OR APPLICATIONS.**

- **PRODUCT IS NEITHER INTENDED NOR WARRANTED FOR USE IN EQUIPMENTS OR SYSTEMS THAT REQUIRE EXTRAORDINARILY HIGH LEVELS OF QUALITY AND/OR RELIABILITY, AND/OR A MALFUNCTION OR FAILURE OF WHICH MAY CAUSE LOSS OF HUMAN LIFE, BODILY INJURY, SERIOUS PROPERTY DAMAGE AND/OR SERIOUS PUBLIC IMPACT ("UNINTENDED USE").** Except for specific applications as expressly stated in this document, Unintended Use includes, without limitation, equipment used in nuclear facilities, equipment used in the aerospace industry, medical equipment, equipment used for automobiles, trains, ships and other transportation, traffic signaling equipment, equipment used to control combustions or explosions, safety devices, elevators and escalators, devices related to electric power, and equipment used in finance-related fields. **IF YOU USE PRODUCT FOR UNINTENDED USE, TOSHIBA ASSUMES NO LIABILITY FOR PRODUCT.** For details, please contact your TOSHIBA sales representative.

- Do not disassemble, analyze, reverse-engineer, alter, modify, translate or copy Product, whether in whole or in part.

- Product shall not be used for or incorporated into any products or systems whose manufacture, use, or sale is prohibited under any applicable laws or regulations.

- The information contained herein is presented only as guidance for Product use. No responsibility is assumed by TOSHIBA for any infringement of patents or any other intellectual property rights of third parties that may result from the use of Product. No license to any intellectual property right is granted by this document, whether express or implied, by estoppel or otherwise.

- **ABSENT A WRITTEN SIGNED AGREEMENT, EXCEPT AS PROVIDED IN THE RELEVANT TERMS AND CONDITIONS OF SALE FOR PRODUCT, AND TO THE MAXIMUM EXTENT ALLOWABLE BY LAW, TOSHIBA (1) ASSUMES NO LIABILITY WHATSOEVER, INCLUDING WITHOUT LIMITATION, INDIRECT, CONSEQUENTIAL, SPECIAL, OR INCIDENTAL DAMAGES OR LOSS, INCLUDING WITHOUT LIMITATION, LOSS OF PROFITS, LOSS OF OPPORTUNITIES, BUSINESS INTERRUPTION AND LOSS OF DATA, AND (2) DISCLAIMS ANY AND ALL EXPRESS OR IMPLIED WARRANTIES AND CONDITIONS RELATED TO SALE, USE OF PRODUCT, OR INFORMATION, INCLUDING WARRANTIES OR CONDITIONS OF MERCHANTABILITY, FITNESS FOR A PARTICULAR PURPOSE, ACCURACY OF INFORMATION, OR NONINFRINGEMENT.**

- Do not use or otherwise make available Product or related software or technology for any military purposes, including without limitation, for the design, development, use, stockpiling or manufacturing of nuclear, chemical, or biological weapons or missile technology products (mass destruction weapons). Product and related software and technology may be controlled under the applicable export laws and regulations including, without limitation, the Japanese Foreign Exchange and Foreign Trade Law and the U.S. Export Administration Regulations. Export and re-export of Product or related software or technology are strictly prohibited except in compliance with all applicable export laws and regulations.

- Please contact your TOSHIBA sales representative for details as to environmental matters such as the RoHS compatibility of Product. Please use Product in compliance with all applicable laws and regulations that regulate the inclusion or use of controlled substances, including without limitation, the EU RoHS Directive. **TOSHIBA ASSUMES NO LIABILITY FOR DAMAGES OR LOSSES OCCURRING AS A RESULT OF NONCOMPLIANCE WITH APPLICABLE LAWS AND REGULATIONS.**

# Mouser Electronics

Authorized Distributor

Click to View Pricing, Inventory, Delivery & Lifecycle Information:

Toshiba:

TB6560AHQ,8