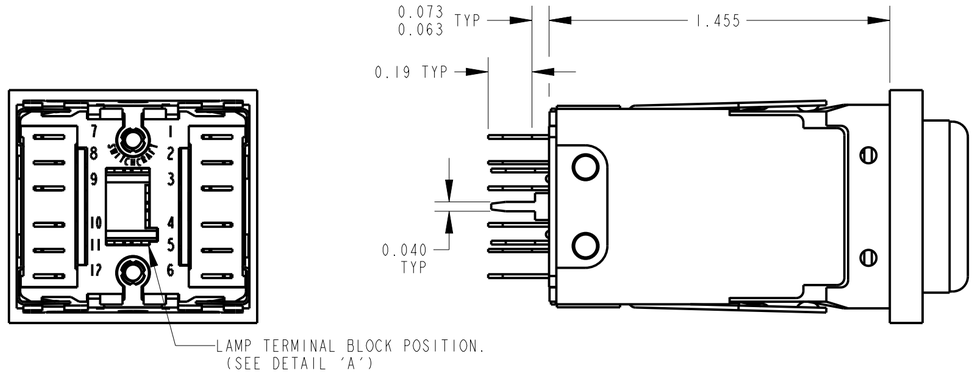

PC TERMINAL OPTION

PL812705X SHOWN

P	L					X
SERIES PL	LAMP & SWITCH HOUSING COLOR	CIRCUITRY	ACTION	PUSHBUTTON COLOR		RoHS COMPLIANT

LAMP & SWITCH HOUSING COLOR

1 - SINGLE LAMP, BLACK HOUSING
2 - TWIN LAMP, BLACK HOUSING
3 - NON-ILLUMINATED, BLACK HOUSING
4 - SINGLE LAMP, GRAY HOUSING
5 - TWIN LAMP, GRAY HOUSING
6 - NON-ILLUMINATED, GRAY HOUSING
7 - SINGLE LAMP, BLACK HOUSING (PC TERMINALS)
8 - TWIN LAMP, BLACK HOUSING (PC TERMINALS)

CIRCUITRY

03 - 1C (SPDT)
06 - 2C (2PDT)
09 - 3C (3PDT)
12 - 4C (4PDT)
23 - 1C (8A)(SPDT)
26 - 2C (8A)(2PDT)
29 - 3C (8A)(3PDT)
32 - 4C (8A)(4PDT)

ACTION

2 - MOMENTARY
7 - PUSH-LOCK/ PUSH-RELEASE

PUSHBUTTON COLOR

00 - NONE
01 - RED
03 - GREEN
04 - BLUE
05 - WHITE
08 - YELLOW
12 - CLEAR
13 - AMBER

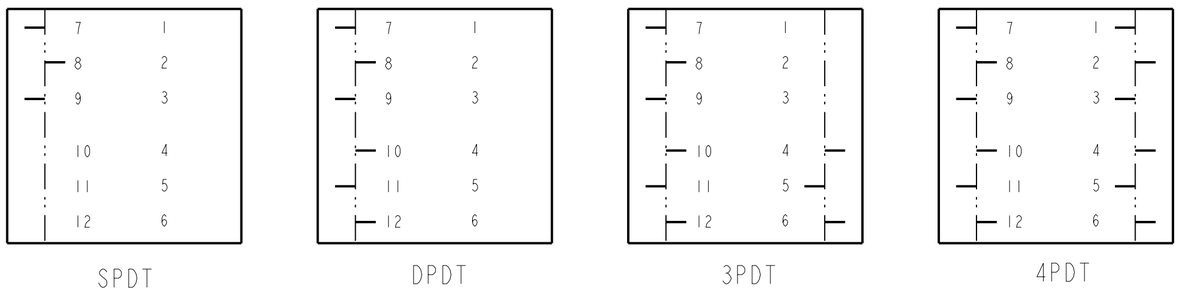

P.C. TERMINAL LOCATION

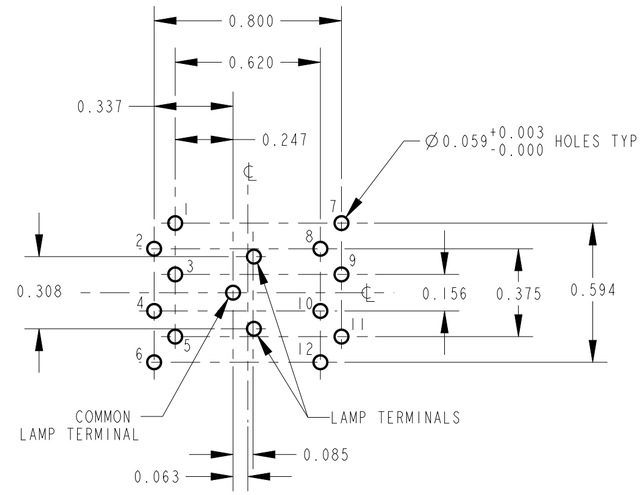

RECOMMENDED PCB LAYOUT

COMPONENT SIDE

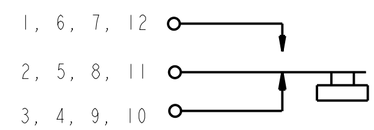

SCHEMATIC

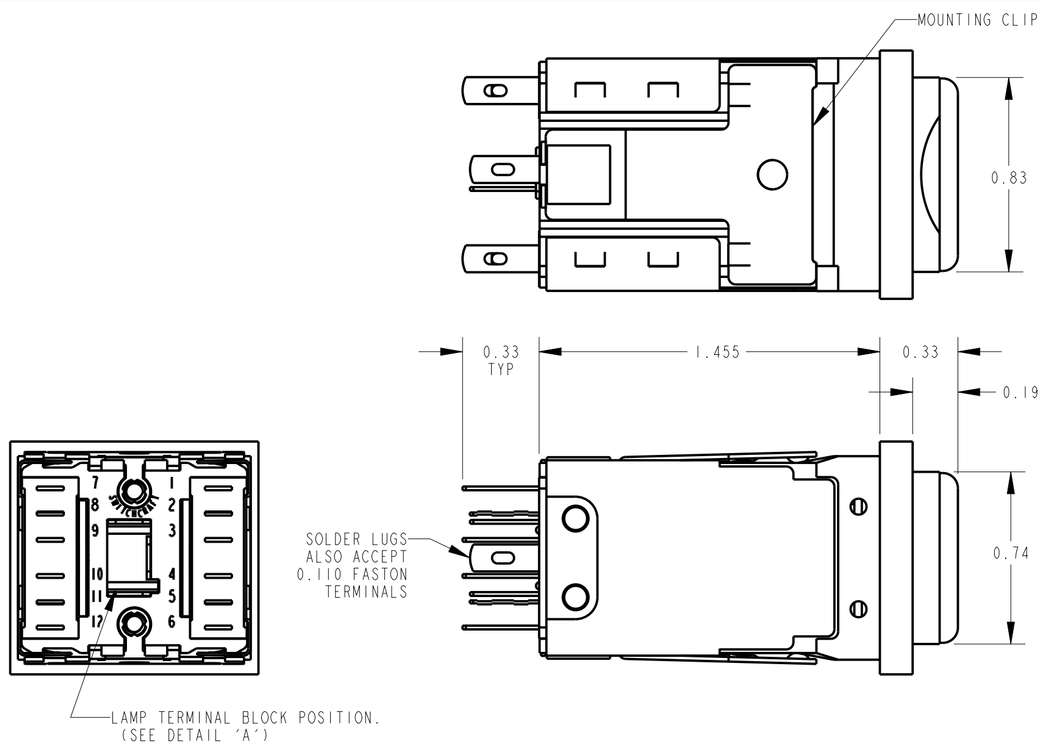

SOLDER TERMINAL OPTION

PL212705X SHOWN

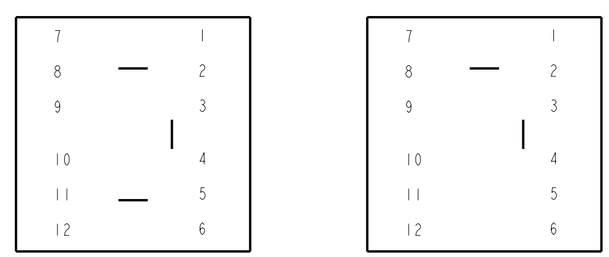

DETAIL 'A'

LAMP TERMINAL LOCATION

NOTES:

1. MATERIALS:
   HOUSING - THERMOPLASTIC, SEE TABLE FOR COLOR
   BUTTON - THERMOPLASTIC, SEE TABLE FOR COLOR
   TERMINALS - COPPER ALLOY, SILVER PLATED
   LAMP SOCKET - PLATED COPPER ALLOY
2. MOUNTING HOLE - 1.000 x 0.875 RECTANGLE. 0.125 MAX PANEL THICKNESS.
3. BUTTON TRAVEL - 0.22 WITH 0.09 FALL BACK ON PUSH-LOCK/PUSH-RELEASE.
4. ACCEPTS STANDARD T 1-3/4 FLANGE BASE LAMPS (NOT SUPPLIED).
5. THIS PRODUCT IS RoHS COMPLIANT.

CUSTOMER DRAWING

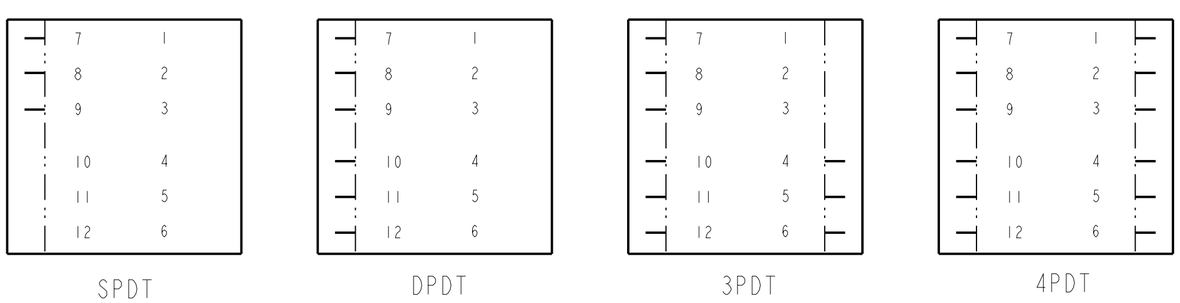

SOLDER TERMINAL LOCATION

REV	ECO NUMBER	DATE	BY	APVD
C	28259	02-03-20	PC	TJK
B	26899	1-12-12	TJK	TJK
A	26244	4-8-09	TJK	TJK

REVISIONS

☆ STAR SYMBOL DENOTES CRITICAL DIMENSION

UNLESS OTHERWISE SPECIFIED

1. ALL DIMENSIONS IN INCHES
   -TWO PLACE DECIMALS ±0.01
   -THREE PLACE DECIMALS ±0.005
   -ANGLES ±1°
   -ALL DIA. CONCENTRIC WITHIN 0.005 T.I.R.
2. FEATURES ON THE SAME CENTERLINE MUST BE ALIGNED WITHIN ±0.002
3. REMOVE ALL BURRS

DO NOT SCALE DRAWING

THIS DRAWING DESCRIBES A DESIGN CONSIDERED PROPRIETARY IN NATURE, DEVELOPED AND MANUFACTURED BY SWITCHCRAFT INC. AND IS RELEASED ON A CONFIDENTIAL BASIS FOR IDENTIFICATION PURPOSES ONLY.

SIZE	WIDTH	MULT	LBS/M	TEMPER

FINISH
SPEC No.

MATERIAL
SPEC No.

FIRST USED ON

SCALE 2:1

DATE DRAWN	BY	CHKD	APVD
31-Mar-09	TJK	TJK 4-8-09	TJK 4-8-09

Switchcraft®

SHEET 1 OF 1

NAME
PUSH-LITE SWITCHES, RoHS

PART No. PL___2__X SERIES
PL___7__X SERIES

REV C

Pro/Engineer CAD File C

Mouser Electronics

Authorized Distributor

Click to View Pricing, Inventory, Delivery & Lifecycle Information:

Switchcraft:

PL106205 PL212705 PL102 PL103205X PL103705X PL106205X PL106705X PL112205X PL112705X PL203205X PL206205X PL206705X PL212205X PL212705X PL103705 PL106705 PL206205 PL212205 PL202 PL126205X PL126705X PL203705X PL226205X PL226705X