DWG. SIZE	DWG. NO.
D	031–4102

REVISIONS

SYM.	E.C.N.	DATE	APVD.
A	24902	7/24/02	
	NOW CHARTED DRAWING		

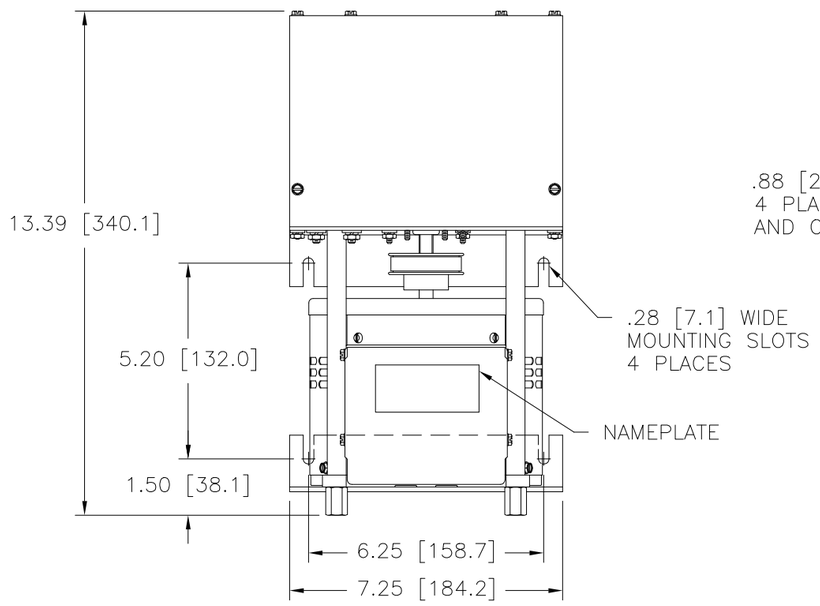

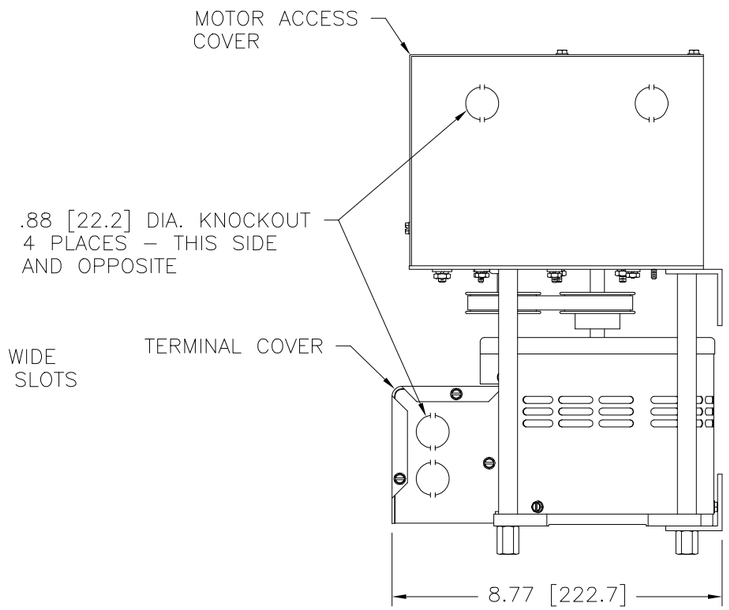

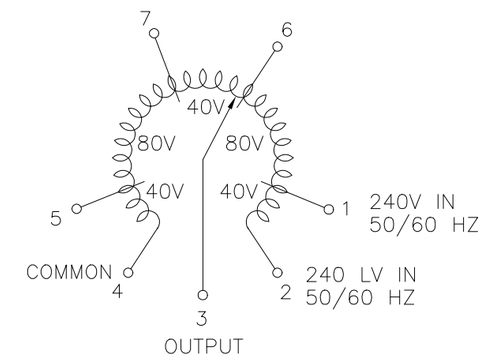

SCHEMATIC
VIEW FROM BASE END

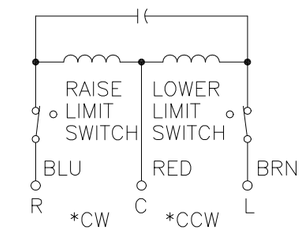

MOTOR CIRCUIT
120V, 50/60 HZ
* ROTATION AS VIEWED
FROM MOTOR END
MOTOR SPEED: SEE CHART

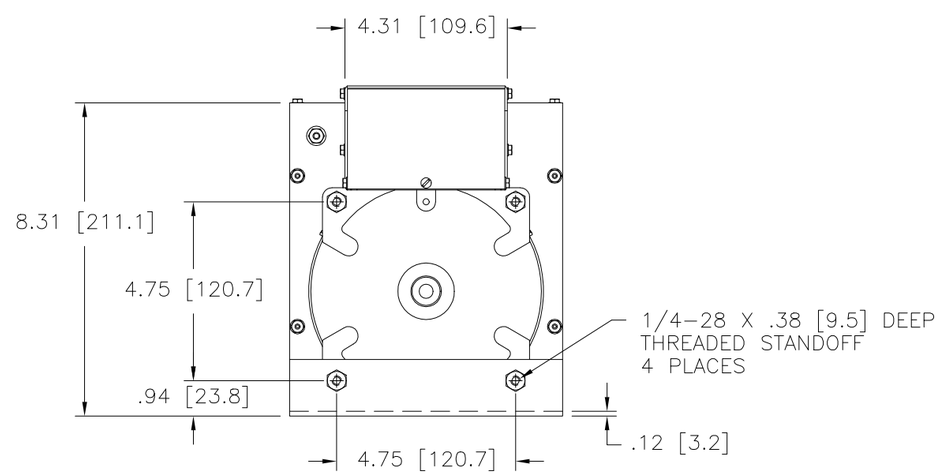

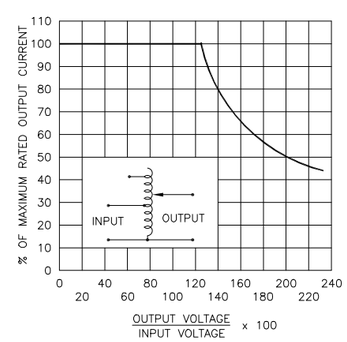

FIGURE A
MAXIMUM OUTPUT CURRENT OF ANY
DUAL INPUT VOLTAGE OR VOLTAGE DOUBLER
UNIT OPERATED AT LOWER INPUT VOLTAGE.

SPEED (SECONDS)	MODEL NUMBER
5	5M1520CT
15	15M1520CT
30	30M1520CT
60	60M1520CT

WIRING	INPUT		OUTPUT					SHAFT ROTATION FOR VOLTAGE INCREASE	TERMINAL CONNECTIONS + (FOR INCREASING VOLTAGE) AS VIEWED FROM BASE END		
	VOLTS	HERTZ	VOLTS	CONSTANT CURRENT LOAD		CONSTANT IMPEDANCE LOAD			INPUT	JUMPERS	OUTPUT
				MAX AMPS	MAX KVA	MAX AMPS	MAX KVA				
SINGLE PHASE	240	50/60	0–240	9.5	2.28	12	2.88	CW	2–4	–	4–3
								CCW	2–4	–	2–3
			0–280	9.5	2.66	–	–	CW	1–4	–	4–3
								CCW	5–2	–	2–3
	120	50/60	0–280	9.5#	1.14§	–	–	CW	7–4	–	4–3
								CCW	6–2	–	2–3

MAXIMUM OUTPUT CURRENT IN OUTPUT VOLTAGE RANGE FROM 0 TO 25% ABOVE LINE VOLTAGE. AT HIGHER OUTPUT VOLTAGES, THE OUTPUT CURRENT MUST BE REDUCED ACCORDING TO THE DERATING CURVE FIGURE A.

§ MAXIMUM KVA AT MAXIMUM OUTPUT VOLTAGE AND CORRESPONDING DERATED OUTPUT CURRENT. MAXIMUM KVA FOR LOWER VOLTAGES MAY BE CALCULATED FROM DERATING CURVE FIGURE A.

+ MOTOR DRIVEN UNITS USE TERMINAL CONNECTIONS FOR CCW INCREASING VOLTAGE, AS VIEWED FROM THE BASE END.

UNLESS OTHERWISE SPECIFIED. TOLERANCE IS ±
DECIMALS .XX .XXX .005 HOLES .06 .01 ANGLES 1° DRAFT 1–1/2°
UNITS IN [mm]
MATERIAL:
ALL DIMENSIONS APPLY AFTER PLATING

TITLE: SPEC. CONTROL DRAWING
VARIABLE TRANSFORMER
MODEL: M1520CT

STACO ENERGY PRODUCTS CO.
A Components Corporation of America Company
3011 Gaddis Boulevard Dayton, Ohio 45403 USA

The information and design disclosed herein was originated by and is the property of STACO ENERGY PRODUCTS CO., which reserves all patent, proprietary, design, manufacturing, reproduction, use and sale rights thereto, and to any article disclosed therein except to the extent rights are expressly granted to others. The foregoing does not apply to vendor proprietary parts.

DRAWN BY	DATE	FIRST USED ON	DO NOT SCALE DWG.
TIM RAU	5/29/96		
CHECKER	DATE	WEIGHT APPROX.	CAGE CODE 83008
ENGINEER	DATE	SCALE 1/2	SHEET 1 OF 1

DWG. SIZE D — DWG. NO. 031–4102

Mouser Electronics

Authorized Distributor

Click to View Pricing, Inventory, Delivery & Lifecycle Information:

Staco:
M1520CT