rf & microwave components and systems

SPECTRUM MICROWAVE INC.
A Spectrum Control Business

Introducing the NEW Spectrum Microwave, Inc.

There is a new leader and source for your RF & microwave systems and components … Spectrum Microwave. Combining the people, products and technologies from FSY Microwave, Salisbury Engineering, Q-Bit, Magnum Microwave, Radian Technologies and Amplifonix into a single organization poised to provide a wide range of microwave solutions.

Spectrum Microwave offers a worldwide network of sales, distribution and manufacturing locations that gives us a responsive local presence in **North America, Europe** and **Asia**.

We've assembled an experienced engineering team that will help you select the right standard product or design a custom solution for your specific application. Our expanded product line now ranges from sophisticated microwave systems and integrated assemblies to advanced control components to ceramic filters and antennas. This diverse array of products includes technologies to satisfy both low cost commercial and high performance military applications.

filter & antenna products

- Lumped element and cavity filters
- BTS filters and tower mounted amplifiers
- Waveguide and tubular filters
- Ceramic bandpass filters and duplexers
- Patch antenna elements and assemblies

integrated microwave systems

- Switchable filter bank assemblies
- Filtered low noise amplifiers
- Frequency multipliers
- Microwave synthesizers
- Couplers
- Integrated microwave sub-assemblies

frequency control components

- Power Amplifiers
- Hybrid and modular amplifiers
- RF mixers
- Local oscillator doublers
- Voltage controlled oscillators (VCOs)
- Dielectric resonator oscillators (DROs)

rf & microwave components and systems

Index **Page**

Introduction

Product Selection Guide 5-9
Design & Testing 10-11
RF & Microwave Solutions Development 12-13
Cascade 14-15
Specwave.com 16
About Spectrum Control 17

Frequency Control Components

Amplifiers 19-20
Mixers 21-22
Voltage Controlled Oscillators (VCOs) 23
Dielectric Resonator Oscillators (DROs) 24
Attenuators, Detectors & Switches 25-26
Coaxial Ceramic Resonators 27-28

Custom Microwave Filters

Filter Topology Selection 30-33
Filter Considerations 34
Frequency Ranges 35
Lumped Element Filters 36-38
Cavity Filters 39-41
Waveguide Filters 42-43
Tubular Filters 44-45
Suspended Substrate Filters 46-47
Bandpass Filters Ceramic Resonator Type 48-50
Bandpass Filters Monoblock Type 51-54
Duplexers Ceramic Resonator Type 55-56
Duplexers Monoblock Type 57-60
Standard Filter Housings 61-63

Base Station Products

Bandpass and Duplexer Filters 64-65
Receiver Multicouplers 66
LNA/Filter-Duplexer Assemblies 66
Tower Mounted Amplifiers 67
Transmit Combiners 67
Directional Couplers 68
Power Dividers/Combiners 68
Delay Line Assemblies 69
Cross-Band Couplers 69

Microwave Subsystems & Custom Assemblies

Switched Filter Banks 71-74
Isolated Switched Filter Banks 75-76
Digitally Tuned Oscillators (DTOs) 77
GPS Low Noise Amplifiers 78-80
Harmonic Multipliers 81-82
Frequency Multipliers 83-87
Microwave Synthesizers 88

Patch Antennas & Assemblies

Patch Antenna Elements & Assemblies 89-91

ISO 9001 CERTIFIED QS 9000 CERTIFIED

SPECTRUM MICROWAVE INC.
A Spectrum Control Business

RF & Microwave Solutions

Design expertise … from the component level to sophisticated microwave subsystems

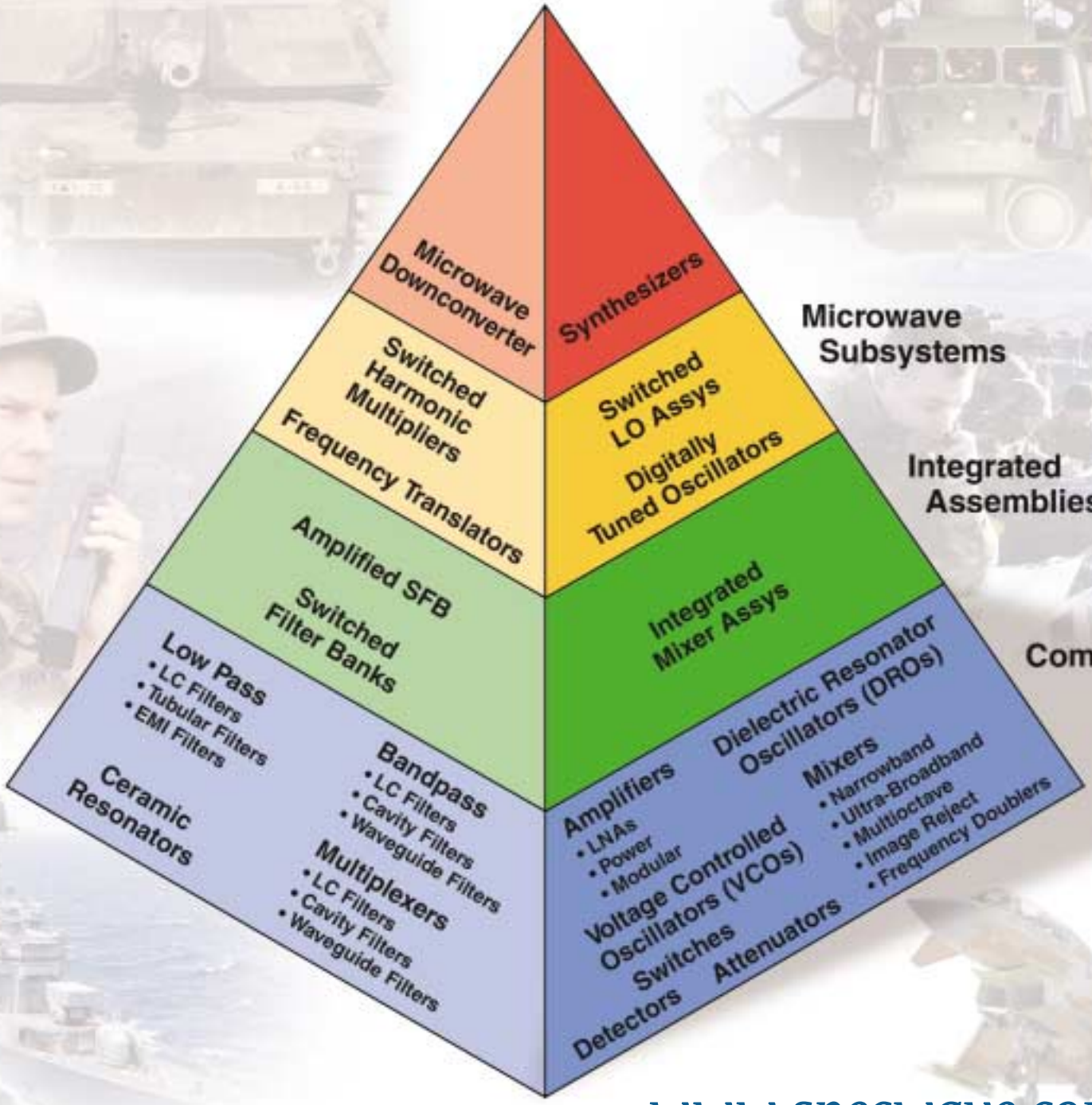

www.specwave.com

RF & Microwave Components and Systems Selection Guide

FREQUENCY CONTROL COMPONENTS

	RF & Microwave Amplifiers	RF & Microwave Mixers	VCOs & DROs	Attenuators, Detectors, Switches, Limiting & Limiter Amps
Applications	Military and wireless communications, medical, test and measurement, avionics, and radars	Military and wireless communications, medical, test and measurement, avionics, and radars	Military and wireless communications, medical, test and measurement, avionics, and radars	Military and wireless communications, medical, test and measurement, avionics, and radars
Features / Benefits	■ Guaranteed Low Phase Noise Amplifiers ■ High Reverse Isolation 25dB above forward gain stage in single stage Amps ■ MIL-STD-883 screening available ■ **Features** Broadband and narrowband response Wide dynamic ranges Custom packaging available Low cost packages available High performance-High reliablity designs	■ **Types** - Multioctave - Narrowband - Ultra-broadband - Image reject - Frequency doublers ■ **Design flexibility** Wide variety of package options available Standard product and customization services available ■ MIL-STD-883 screening available	■ Guaranteed Low Phase Noise ■ **Design flexibility** Drop in, surface mount and connectorized packaging options Standard product and customization services available Integration with other components available ■ MIL-STD-883 screening available ■ **Features** Custom packaging available High performance-High reliablity designs	**Attenuators** ■ RF, digital and Analog ■ DC to 2.5 GHz ■ Digital - tuning sensitivity form 0.1 dB to 63.5 dB ■ Analog - maximum attenuation of 40 dB **Detectors** ■ Threshold and Analog ■ 10 MHz to 2 GHz ■ Threshold • thermally compensated, accurate RF measurement • controlled with external resistor or an external voltage ■ Analog - video output proportional to the input power
Performance Characteristics	■ **Frequency range** 0.5 MHz to 6 GHz ■ **Typical Gain** as high as 37 dB ■ **LNA Noise Figures** as low as 0.9 dB *Pages 19-20* *www.specwave.com/amp*	■ **Frequency range** 0.5 MHz to 26.5 GHz *Pages 21-22* *www.specwave.com/mixer*	■ **Frequency range** 25 MHz to 18 GHz *Pages 23-24* *www.specwave.com/vco* *www.specwave.com/dro*	**Switches** ■ GaAs and Pin Diode ■ DC to 3 GHz ■ Pin Diode - many package configurations with up to 8 throws **Limiting/Limiter Amps** ■ 5 MHz to 3000 MHz *Pages 25-26* *www.specwave.com/ads*

Filter Application Key:

Bandpass | Highpass | Lowpass | Band reject | Duplex | Multiplex

RF & Microwave Components and Systems Selection Guide

MICROWAVE FILTERS

	Ceramic Resonators	Bandpass Filters & Duplexers Ceramic Resonator Type	Bandpass Filters & Duplexers Monoblock Type	Lumped Element Filters
Applications	Wireless equipment, voltage controlled oscillators, clock oscillators, automotive electronics, and HDD	Cellular base station transceivers, land mobile radios, satellite transceivers, modems, CATV infrastructure, and GPS modules	Cellular base station transceivers, land mobile radios, satellite transceivers, modems, CATV infrastructure, and GPS modules	Commercial and military communication systems, Avionics, radars, IF & RF, point to point, E-911, Base stations CDMA, PCS, WLL, IMT-2000, MMDS
Features / Benefits	■ **Design flexibility** Custom sizes available ■ **Rugged construction** Easy handling and assembly ■ **Easy installation** Surface or tab mounting Tape and reel packaging ■ **Features** Low frequency drift vs. temperature High Q Wide frequency range 1/4 and 1/2 wave coaxial designs Dielectric constant: 20 - 90	■ **Easy installation** Surface mount or thru-hole mounting Tape and reel packaging ■ **Design flexibility** Available in 2-10 poles Notch filters available ■ **Features** Low frequency drift vs. temperature High Q Excellent isolation between transmit and receive frequencies Tape and reel available	■ **Easy installation** Surface mount Tape and reel packaging ■ **Design flexibility** Smaller size Lower cost Low profile ■ **Features** Low frequency drift vs. temperature High Q Excellent isolation between transmit and receive frequencies Tape and reel available	■ **Easy installation** Reflow solderable available ■ **Design flexibility** Smallest size Leaded and surface mount Low profile PC mount Connectorized Tape and reel available ■ **Features** Excellent size/performance ratio Wide range of transfer functions available Hermetically sealed packages available ■ **Performance** 8% to 100% bandwidth Lowest cost IF filter alternative
Performance Characteristics	■ **Frequency range** 400 MHz to 5 GHz ■ **Q range** 200 - 35,000 ■ **Temperature stability** ±5 ppm/°C ■ **Temperature range** -55°C to +125°C ±0.3% from -20°C to +80°C ■ **Frequency tolerance range** ±0.5% *Pages 27-28* *www.specwave.com/cr*	■ **Frequency range** 400 MHz to 5 GHz standard Other frequencies available (consult factory) Custom specifications available ■ **Q range** 400 - 2,000 ■ **Impedance** 50 Ω and 75 Ω ■ **Temperature stability** ±5 ppm/°C ■ **Temperature range** -30°C to +85°C *Pages 48-50, 55-56* *www.specwave.com/resband*	■ **Frequency range** 300 MHz to 5.8 GHz standard Custom specifications available ■ **Q range** 100 - 1200 ■ **Impedance** 50 Ω and 75 Ω ■ **Temperature stability** ±5 ppm/°C ■ **Temperature range** -30°C to +85°C *Pages 51-54, 57-60* *www.specwave.com/monoband*	■ **Filter attributes** Bandpass: 300 kHz - 8 GHz Highpass: 30 kHz - 8 GHz Lowpass: 30 kHz - 18 GHz Band Reject: 1 MHz - 8 GHz Duplexer/Multiplexer: 30 kHz - 8 GHz *Pages 36-38* *www.specwave.com/lump*

Filter Application Key:

Bandpass | Highpass | Lowpass | Band reject | Duplex | Multiplex

RF & Microwave Components and Systems Selection Guide

MICROWAVE FILTERS

	Cavity Filters • Interdigital • Combline • Ceramic Loaded • Helical	Waveguide Filters	Tubular Filters	Suspended Substrate Filters
Applications	Avionics, military, base stations, test instrumentation, and communications	Avionics, digital radios, repeaters, Point to Point, transmit filters, and satellite communications	Instrumentation, medical, and high power harmonic rejection	ECM, ECCM, ELINT, and ultra broadband receivers
Features / Benefits	■ **Design flexibility** Easily duplexed Wide range of configurations ■ **Features** Wide range of bandwidths to 100% Excellent temperature stability Low loss High peak power Low IMD designs available Very high selectivity	■ **Design flexibility** Flanges or connectorized ■ **Performance** 0.1 to 20% bandwidth Extremely low loss High power handling Extremely low loss High power capacity	■ **Design flexibility** Rapid prototyping ■ **Features** Low loss High power handling Low cost Broad stop band characteristics	■ **Design flexibility** Ideal for multiplexing ■ **Features** Multi-octave bandwidths High selectivity Low profile
Performance Characteristics	■ **Filter attributes** Bandpass: 60 MHz - 40 GHz Band Reject: 60 MHz - 20 GHz Duplexer/Multiplexer: 60 MHz - 40 GHz *Pages 39-41* *www.specwave.com/cavity*	■ **Filter attributes** Bandpass: 2 GHz - 40 GHz Lowpass: 2 GHz - 40 GHz Band Reject: 2 GHz - 40 GHz Duplexer: 2 GHz - 40 GHz *Pages 42-43* *www.specwave.com/waveg*	■ **Filter attributes** Bandpass: 30 MHz - 5 GHz Lowpass: 30 MHz - 20 GHz *Pages 44-45* *www.specwave.com/tubular*	■ **Filter attributes** Bandpass: 2 GHz - 20 GHz Highpass: 2 GHz - 20 GHz Lowpass: 300 MHz - 20 GHz Band Reject: 2 GHz - 20 GHz Duplexer/Multiplexer: 2 GHz - 20 GHz *Pages 46-47* *www.specwave.com/substrate*

Filter Application Key:

Bandpass **Highpass** **Lowpass** **Band reject** **Duplex** **Multiplex**

RF & Microwave Components and Systems Selection Guide

	BASE STATION PRODUCTS		MICROWAVE SUBSYSTEMS & ASSEMBLIES	
	Filters & Duplexers	**Custom Assemblies**	**Microwave Subsystems**	**Switched Filter Banks**
Applications	WCDMA, WLL, GSM, PCS, AMPS, UMTS, and IMT-2000	PCS, Cellular, GSM, UMTS, AMPS, CDMA, GPRS, WiMax, ISM, DCS, MMDS, WLAN	GPS positioning systems, airborne and ground radars, test verification sets, microwave sources for test sets and radio communication systems	Communication and navigation systems, microwave receiver front ends (including preselection and amplification), radar and, electronic warfare assemblies
Features / Benefits	Combiners Power Dividers Delay Line Assemblies Duplexers/ LNA Assemblies	■ **Design flexibility** The integration of filter-based products with critical microwave devices (for example: switches, power dividers, amplifiers, ferrites, etc.) is an alternative to several individual components which may be larger, more costly and exhibit lower performance than our multifunction assemblies ■ **Features** Integration improves performance and reduces cost and size Rack mount packages for test systems	■ **Non-Linear frequency devices** ■ **Reduced Size** ■ **Enhanced performance** by utilizing optimized filters ■ **Minimized mismatches** and ripple through tuning and impedance match control	■ **Enhanced system performance** Filter optimization into switch manifolds Improved amplitude ripple Improved phase response Lower overall amplitude losses or better noise figure performance Reduced size ■ **Reduces processing cost through less:** Less documentation Fewer incoming inspections Easier implementation Less maintenance
Performance Characteristics	Band Reject or Notch Filters Multicouplers *Pages 64-69* *www.specwave.com/base*	■ **Filter based assemblies including** Receiver multicouplers Tx combiners Duplexer/Filter/LNA Tower top amplifiers Base station combiner assemblies Feed forward amplifiers Delay lines Receivers *Pages 64-69* *www.specwave.com/base*	■ **Passbands** DC to 20 GHz ■ **Rejections** DC to 50 GHz *Pages 70-88* *www.specwave.com/integrated*	■ **Passbands** DC to 26 GHz ■ **Rejections** DC to 40 GHz *Pages 71-76* *www.specwave.com/sfb*

Filter Application Key:

Bandpass | Highpass | Lowpass | Band reject | Duplex | Multiplex

RF & Microwave Components and Systems Selection Guide

	MICROWAVE SUBSYSTEMS & ASSEMBLIES			ANTENNAS
	Frequency Multipliers	**Microwave Synthesizers**	**Filtered Low Noise Amplifiers**	**Patch Antenna Elements & Assemblies**
Applications	Test and measurement equipment, radio communication systems, and radar equipment	Test and measurement equipment, and radio communication	GPS Receivers (L1, L1/L2, L1/L5)	GPS, GlobalStar, Inmarsat, ISM, SDARS
Features / Benefits	■ Low spurious ■ Low Phase Noise ■ Integral voltage regulation ■ Designed to meet MIL-spec requirements	■ Low Phase Noise ■ Low spurious ■ Hermetically sealed packages ■ Designed to meet MIL-spec requirements	■ **Integrated filters for excellent rejection** ■ **Rugged form factor suitable for harsh environments** ■ **Hermetically sealed packages** ■ **Designed to meet MIL-Spec requirements**	■ **Design flexibility** Various size configurations: · 13 mm x 13 mm x 3 mm · 16 mm dia. x 6 mm · 18 mm x 18 mm x 4 mm · 25 mm x 25 mm x 4 mm · 27 mm x 27 mm x 6 mm · 37 mm x 37 mm x 4 mm · 50 mm x 50 mm x 3 mm Designed for optimal performance on customer ground plane ■ **Easy installation** Surface mount Silver plated electrode and probe ■ **Performance** Low frequency drift vs. temperature Low return loss Offset single-point feeding method
Performance Characteristics	■ Less than 120 nsec switching speeds ■ 100 MHz to 24 GHz passbands *Pages 83-87* *www.specwave.com/multiplier*	■ **Frequency Range** 100 MHz to 18 GHz ■ **Spurious** <-55 dBc ■ **Tuning speeds** Sub-microsecond *Page 88* *www.specwave.com/synthesizer*	■ **Excellent noise figure of 1.6 dB typical** ■ **Standard gain values from 14 to 45 dB** *Pages 78-80* *www.specwave.com/lna*	■ **Frequency range** 1 GHz to 3 GHz Custom frequencies available upon request ■ **Impedance** Determined by design ■ **Environmental** Determined by material ■ **Right and left hand polarization** *Pages 89-91* *www.specwave.com/patch*

Filter Application Key:

Bandpass **Highpass** **Lowpass** **Band reject** **Duplex** **Multiplex**

Microwave Engineering Expertise

The new Spectrum Microwave offers an extensive design library including the combined efforts of our engineers from FSY Microwave, Salisbury Engineering, Q-Bit, Magnum Microwave, Radian Technologies and Amplifonix. This talented staff of engineering professionals comes from a diverse set of design backgrounds including system, amplifier, filter, receiver, oscillator, and synthesizer experience.

We have designed components performing over the full military temperature ranges as well as for space and other hostile environments. Our operating frequency range stretches from the low end of the frequency spectrum up to 50 GHz.

Advanced Design Technology

Our engineers prefer to design using proven circuits and approaches, but they also explore the use of more exotic methods. Spectrum Microwave conducts internal research and development programs that attempt to exploit new technologies. Some examples include MEMS RF switches, high speed Schottky and silicon PIN level limiting, GaAs PIN diode switching, and high-speed direct frequency synthesizers. We also have demonstrated stopband performance to 40 GHz and ripple reduction in switched filter banks through control of impedance transitions between switches and filters.

www.specwave.com

World Class Quality

Spectrum Microwave applies the principles of Spectrum Control's Quality Management System to deliver the world class quality and consistency that our customers demand. The efficiencies gained from our manufacturing procedures enable us to cost effectively produce small volume custom products and high run standard products. We monitor critical phases of the production process with data logging technology. Our engineers are integrally involved throughout the process, ensuring the quality required of our ISO9001 and QS9000 certifications.

Testing and Verification

Integral to finding solutions to frequency control problems is the ability to test for compliance. In order to successfully test these complex designs, we have invested heavily in high-performance test equipment including Agilent PNA network analyzers with calibrated performance to 50 GHz, low-phase noise signal generators, an Agilent ES5500 phase noise measurement system, and additional in-house environmental test equipment.

Using this equipment, we have measured the vibration-induced phase noise modulation performance of systems and components employing narrow-band filtering. Our ability to conduct such a wide range of tests in-house allows for a faster turnaround of your complete design solution.

Unique In-House Testing Capabilities

- Phase noise testing
- MIL-PRF-38534 Class H
- ESS – environmental stress screening
- Analytical circuit design
- Surge testing and power handling
- EN testing for European requirements
- All screening performed on-site
- All group testing performed on-site

In-House Environmental Testing

Test	MIL-STD-883		MIL-STD-202	
Description	**Method**	**Condition**	**Method**	**Condition**
Vibration	-	-	204	G
Thermal Shock	-	-	107	A-1
Immersion	1016	-	104	A
Salt Spray	1001	-	101	B
Moisture Resistance	1002	II	106	-
Mechanical Shock	2004	-	213	I
Barometric Pressure	3001	-	105	C
Resistance to Solder Heat	-	-	210	B
Terminal Strength	-	-	211	A
Contact Resistance	-	-	307	-
Life	-	-	108	D
Durability	-	-	-	-
Solderability	-	-	208	-
Internal Visual	2017	-	-	-
Stabilization Bake	1008	24 hrs@150°C	-	-
Temperature Cycle	1010	-65°C to 150°C	-	-
Constant Acceleration	2001	5000 G y1	-	-
Hermetic Seal	1014	A and C	-	-
Burn In	1015	168 hrs@85°C	-	-
External Visual	2009	-	-	-

Test		
Description	**Method**	**MIL-STD**
AC Voltage Drop	AC measurement across the terminals	202
Insertion Loss	Per MIL-STD-1344 with or without load	202
Insertion Loss at temperatures	-55˚C to 125˚C	202
DPA Filter	Per Mil-C-123	202
DPA Capacitor	DPA to Mil-C-123	202
Steady State Life	Test Method 1005	883
Die Shear Strength	Test Method 2019	883

rf&microwave solutions development

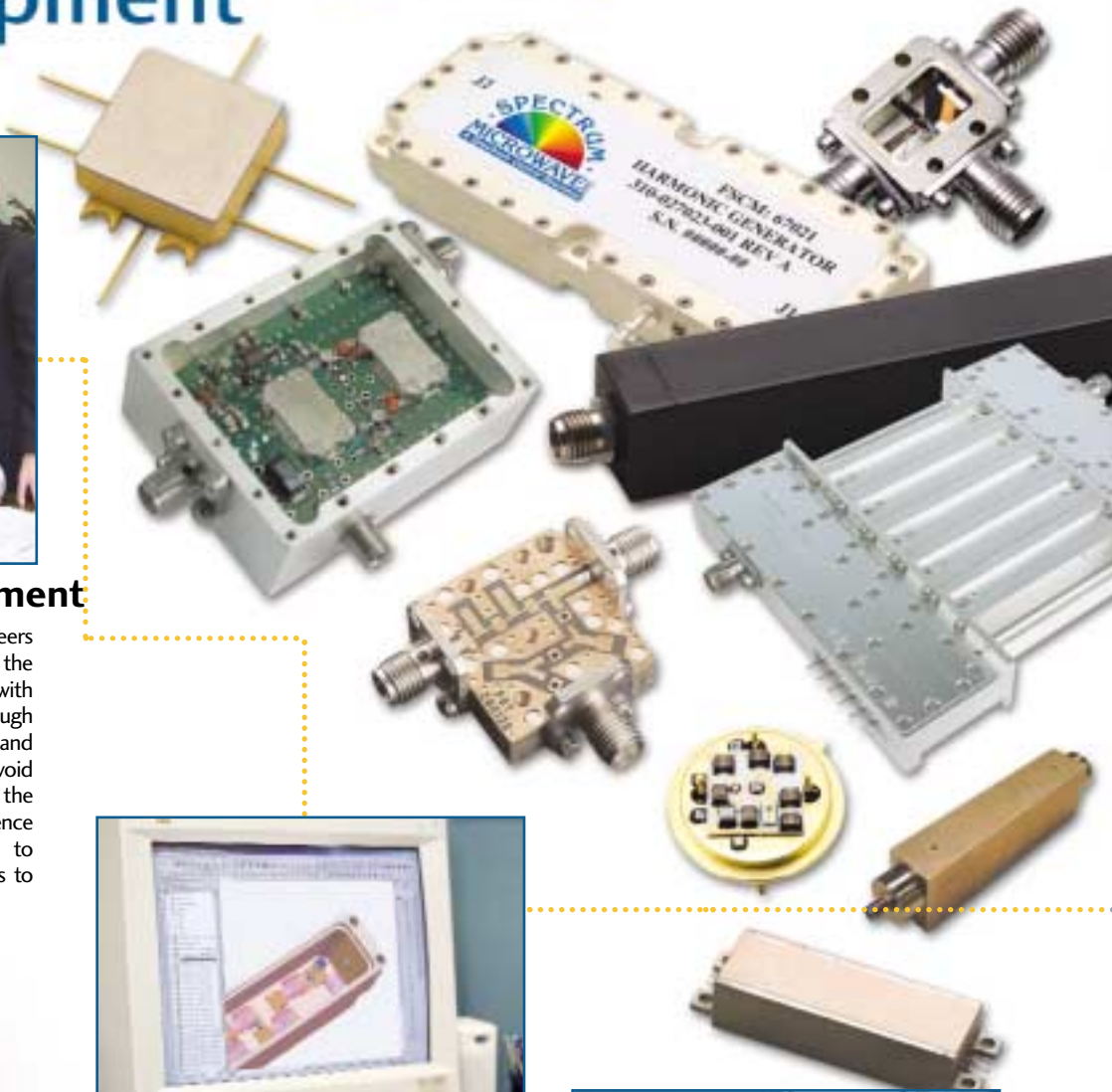

specification development

Our application specialists and design engineers will assist your team at every stage of the wireless product design process. Beginning with the conceptual model and progressing through the final test, we have the knowledge and experience to help you identify and avoid potential development problems early in the design process. Our many years of experience and breadth of product line allow us to troubleshoot designs and provide solutions to optimize your microwave system.

simulation & design

Spectrum Microwave uses the most advanced simulation technology for a comprehensive microwave system review. Our engineering teams apply filter synthesis software to model and design both components and integrated sub-systems. We subsequently verify and qualify these designs using sophisticated test equipment, methodology and software. Through our simulation expertise and the early involvement of our engineers in your development process, we will reduce overall design cycle time to meet your needs for a faster time-to-market.

ISO 9001 CERTIFIED

QS 9000 CERTIFIED

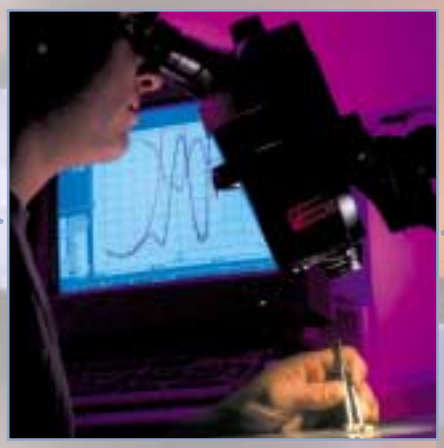

prototyping

We have consistently invested in the technology and equipment to provide our customers with quick-turn prototypes. Enhancing our response time is our ability to rapidly design and manufacture test and pre-production fixturing to insure consistent results. We apply these electrical and mechanical aspects into a prototype build to demonstrate the product's performance and manufacturability.

testing

All Spectrum Microwave wireless products are 100% tested for key electrical characteristics. In order to provide the most accurate and specific test procedures, our engineering staff has developed custom and automated test equipment that is positioned at critical points in our manufacturing operation. We administer our test procedures for not only prototypes, but for each and every wireless product we manufacture. This focus on quality and reliability is part of the commitment we make to our customers.

manufacturing

Spectrum Microwave offers the world class manufacturing necessary to deliver the Six Sigma reliability our customers demand. We are a vertically integrated manufacturer utilizing multiple locations for in-house capabilities ranging from producing ceramic antenna elements and RF filters, to ceramic resonators and capacitors. As a testament to our quality commitment, our facilities and processes are ISO9001 and QS9000 certified.

logistics

Integral to any company's success today is effective inventory and logistics management. Spectrum Microwave is ready to partner with its customers to help achieve this goal. Our flexible and global manufacturing system allows us to quickly ramp-up production and meet your fast-track program delivery requirements. We utilize tools such as schedule sharing that enable us to manage our production system to meet your anticipated requirements.

Cascade Design Suite

An innovative microwave design engineering software tool, download the most current version at www.specwave.com/cascade

control products

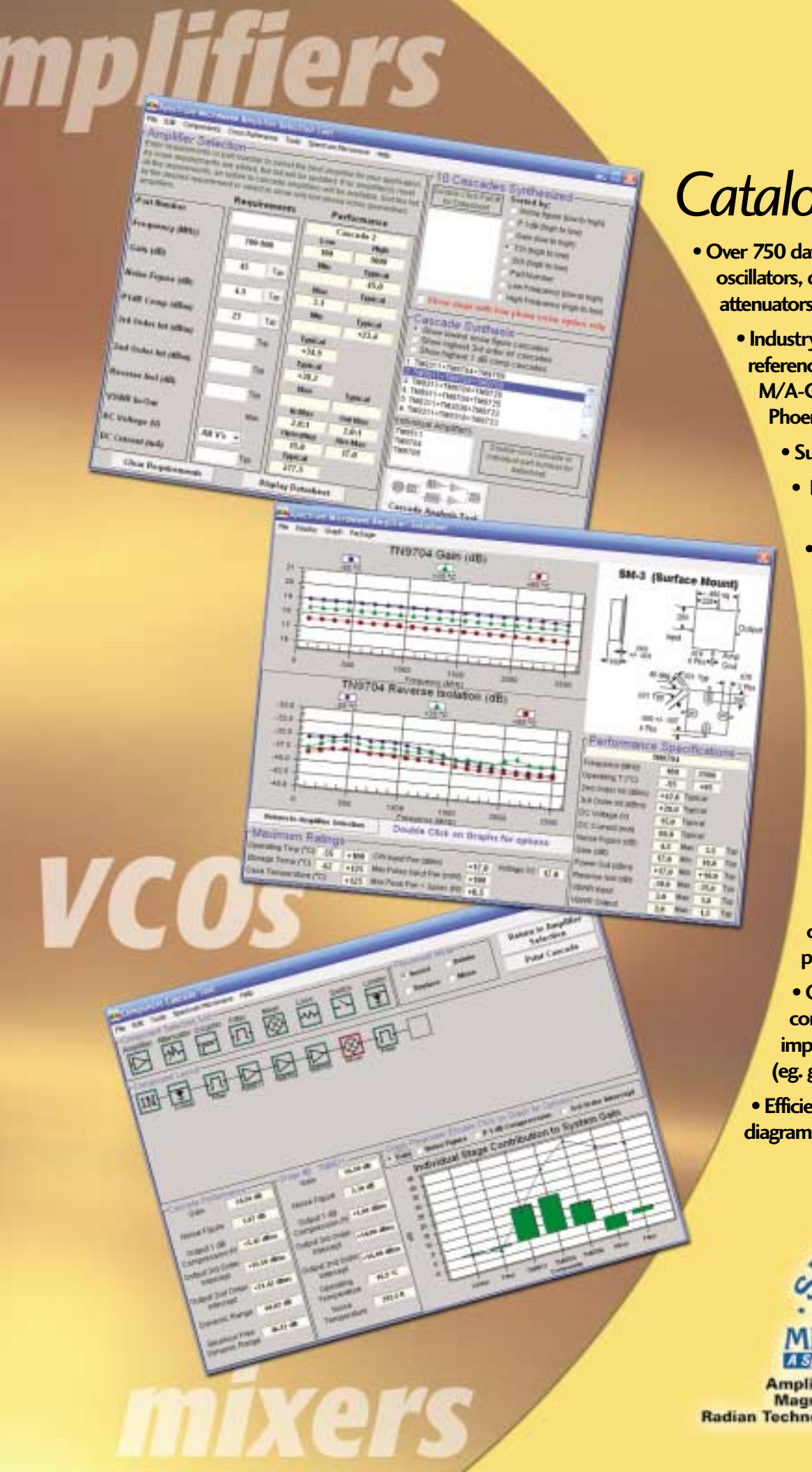

Catalog Search

- Over 750 datasheets on amplifiers, mixers, oscillators, detectors, limiters, limiting amps, attenuators and switches
- Industry's best part number cross reference for Avantek-Avnet, Cougar, M/A-COM, Watkins- Johnson/Stellex, Phoenix Microwave, Vari-L and Motorola
- Submit an RFQ for a custom design
- Review datasheets for each selected component
- Search entire Spectrum Microwave product line
- Save information as a spreadsheet for export to another software program

System Simulator

- Optimize your design by viewing individual component contribution to overall system performance
- Quickly evaluate trade-offs in component selection and their impact on system performance (eg. gain, noise and power)
- Efficiently visualize your block diagram concept

SPECTRUM MICROWAVE INC.
A Spectrum Control Business

Amplifonix • FSY Microwave
Magnum Microwave • Q-Bit
Radian Technologies • Salisbury Engineering

rf & microwave component & system solutions @ specwave.com

- Learn about all of Spectrum Microwave's products
- Updated versions of more than 900 product datasheets
- Most current version of Cascade Design Suite
- Reference tools and White Papers
- Create a custom design project per your individual specifications

SPECTRUM CONTROL INC.

a control & products systems company

Spectrum Microwave is a wholly owned subsidiary of Spectrum Control. Founded in 1968, Spectrum Control is a solutions-oriented company designing and manufacturing products to suppress or eliminate Electromagnetic Interference (EMI). Over time, Spectrum Control has evolved into a world leader in the design and manufacture of control products and systems used to condition, regulate and govern electronic performance.

Spectrum products are used in virtually all industries worldwide including telecommunications, medical, government, military, aerospace, computer and industrial controls. In addition, we've secured preferred supplier status with many of the leading OEMs around the world.

Spectrum Control has established a worldwide sales, manufacturing and distribution network that provides our customers with responsive, time critical service. Our global reach gives us a presence in North America, Europe and Asia. This commitment to supporting our customers' logistical requirements is further evidenced by our recent opening of a new manufacturing plant in Guang Dong, China.

Spectrum offers world class manufacturing capable of satisfying the most demanding production schedules. Our flexible manufacturing system allows us to quickly ramp-up production to meet fast track program delivery requirements. All Spectrum Control facilities and processes are ISO9001 certified.

Spectrum Microwave

RF & Microwave Components, Modules & Systems

- Amplifiers & mixers
- VCOs & DROs
- Microwave filters
- Switched filter banks
- Integrated microwave subsystems
- Ceramic filters & resonators
- Patch antennas & assemblies

www.specwave.com

Signal & Power Integrity Group

EMI & Surge Components & Modules

- Discrete EMI filters
- Filtered arrays and interconnects
- Surface mount inductors & capacitors
- ESD/EFT protected connectors
- Power entry & power line filters
- Military/multisection filters
- Gaskets & shielding

www.specemc.com

Power Management Systems Group

Power Distribution & Remote Management Systems

- AC/DC power distribution units
- Remote reboot & power management systems
- Circuit protection panels
- Custom AC & DC power assemblies
- AC power distribution strips

www.specpower.com

www.spectrumcontrol.com

SPECTRUM MICROWAVE INC.
A Spectrum Control Business

Frequency Control Components

Section Index	Page
Amplifiers	19-20
Mixers	21-22
Voltage Controlled Oscillators (VCOs)	23
Dielectric Resonator Oscillators (DROs)	24
Attenuators, Detectors & Switches	25-26
Coaxial Ceramic Resonators	27-28

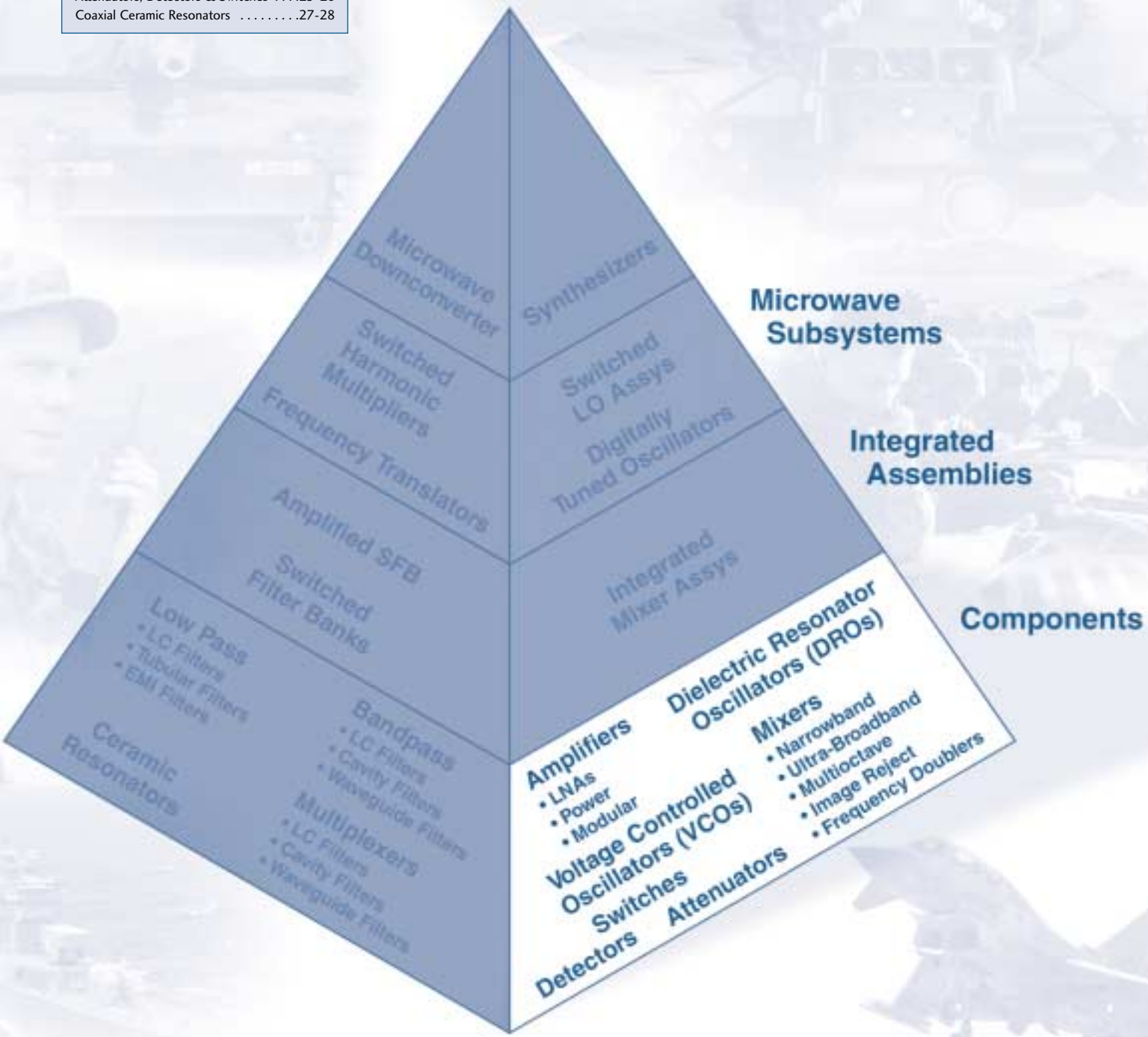

Amplifiers

• LNAs • Power Amps
• Driver Amps • Broadband Amps

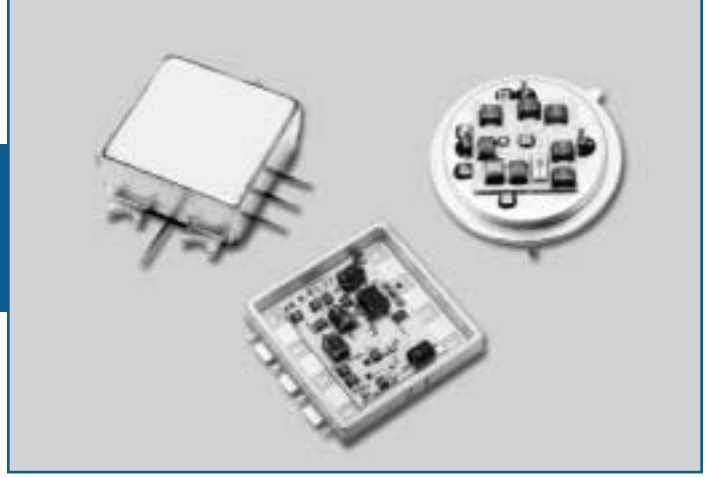

Spectrum Microwave's hybrid amplifier product line (formerly Q-Bit and Amplifonix) covers frequency ranges from 0.5 MHz to 6 GHz. These amplifiers are available in many industry standard surface mount, drop-in and connectorized housings, and are well suited for military, CATV, medical and telecommunication and commercial markets. Spectrum amplifiers provide a wide dynamic range with high linearity and are a cost effective solution.

Features

- High reverse isolation
- Low phase noise performance
- Screening to MIL-STD-883
- Industry standard package options
- Over 500 standard products available

Applications

- Military communication systems
- Avionics
- Radar systems
- Telecommunication base stations
- Medical devices
- Test and measurement

Typical Performance Characteristics

Frequency Range ..... 0.5 MHz to 6 GHz
Gain ..... 8 dB to 29 dB typ
Noise Figure..... from <1 dB to 4 dB
Operating Temperature..... -40°C to +85°C typ

Higher Power Amplifiers (Example parts. See databook or specwave.com for full list)

Part Number	Frequency Range (MHz)	Gain - typ (dB)	Power: 1 dB Compression - typ (dBm)	Noise - typ (dB)	Rev. Isolation - typ (dB)	IP3 - typ (dBm)	IP2 - typ (dBm)	Power Supply DC - typ
QBS-368	2400 - 2450	32.0	46.0	-	-	55.0	-	15.0
QBS-230	800 - 960	39.0	43.0	-	-50.0	53.0	-	12.5
QBS-367	2400 - 2450	32.0	42.0	-	-50.0	52.0	-	13.0
QBS-227	860 - 910	42.0	39.0	-	-60.0	49.0	-	24.0
BXMP1004	50 - 250	31.0	33.5	3.5	-38.0	43.0	63.0	15.0
BXMP1008	50 - 250	17.0	33.5	5.6	-20.0	43.0	63.0	15.0
QBS-158	800 - 960	21.5	33.0	2.5	-24.0	50.0	-	14.0
QBS-2561	800 - 2000	24.0	33.0	-	-35.0	47.0	-	15.0
BXMP1001	0.5 - 35	22.0	32.0	3.7	-27.0	49.0	93.0	24.0
BXMP1003	5 - 35	22.0	32.0	3.7	-27.0	49.0	93.0	24.0

Low Noise Amplifiers (Example parts. See databook or specwave.com for full list)

Part Number	Frequency Range (MHz)	Gain - typ (dB)	Power: 1 dB Compression - typ (dBm)	Noise - typ (dB)	Rev. Isolation - typ (dB)	IP3 - typ (dBm)	IP2 - typ (dBm)	Power Supply DC - typ
QBH-8713	890 - 915	15.8	27.0	1.0	-21.0	42.0	-	15.0
QBH-2003	800 - 960	20.0	18.0	1.0	-	30.0	-	5.0
TR9755	800 - 1200	26.0	14.0	1.0	-38.0	25.0	40.0	5.0
TR9770	800 - 1200	25.0	14.0	1.0	-38.0	25.0	40.0	15.0
TM3086	1400 - 1600	16.0	19.0	1.0	-22.0	33.0	42.0	15.0
TR9756	1200 - 1700	27.0	15.0	1.0	-38.0	26.0	40.0	5.0
TR9771	1200 - 1700	27.0	15.0	1.0	-38.0	26.0	40.0	15.0
QBH-8756	1850 - 1910	22.5	20.0	1.0	-40.0	35.0	-	15.0
QBH-2001	1800 - 2200	13.0	17.0	1.0	-	32.0	-	5.0
QBH-8714	800 - 825	16.0	27.0	1.1	-21.0	41.0	-	15.0

SPECTRUM MICROWAVE • 2144 Franklin Dr. N.E. • Palm Bay, FL • Phone: 888-553-7531 • Fax: 888-553-7532
SPECTRUM MICROWAVE GmbH • Hansastrasse 6 • 91126 Schwabach, Germany • Phone: (49)-9122-795-0 • Fax: (49)-9122-795-58
www.specwave.com

Amplifiers

Higher Gain Amplifiers (Example parts. See databook or specwave.com for full list)

Part Number	Frequency Range (MHz)	Gain - typ (dB)	Power: 1 dB Compression - typ (dBm)	Noise - typ (dB)	Rev. Isolation - typ (dB)	IP3 - typ (dBm)	IP2 - typ (dBm)	Power Supply DC - typ
QBS-227	860 - 910	42.0	39.0		-60.0	49.0		24.0
QBS-230	800 - 960	39.0	43.0		-50.0	53.0	-	12.5
TR9666	10 - 1000	37.0	15.5	3.5	-52.0	25.0	31.0	15.0
TM6683	10 - 250	34.0	-1.0	2.0	-47.5	10.0	9.0	5.0
TR5853	100 - 300	33.5	22.5	1.8	-37.0	36.0	45.0	15.0
TM6719	5 - 500	33.0	9.0	1.7	-42.0	20.0	36.0	15.0
TR6535	10 - 400	32.5	22.0	1.8	-36.0	37.0	48.0	15.0
TM3046	5 - 200	32.0	3.0	3.0	-42.0	16.0	26.0	5.0
TM7203	5 - 250	32.0	8.0	3.0	-40.0	18.0	30.0	15.0
TR3044	200 - 300	32.0	21.0	1.8	-37.5	33.0	45.0	15.0

Lower Power Amplifiers (Example parts. See databook or specwave.com for full list)

Part Number	Frequency Range (MHz)	Gain - typ (dB)	Power: 1 dB Compression - typ (dBm)	Noise - typ (dB)	Rev. Isolation - typ (dB)	IP3 - typ (dBm)	IP2 - typ (dBm)	Power Supply DC - typ
TM9266	10 - 2000	17.0	14.5	4.5	-26.0	27.5	43.0	15.0
TM3059	450 - 950	25.0	14.5	3.5	-30.0	27.0	34.0	5.0
TM6607	5 - 500	15.0	14.5	5.0	-19.0	24.0	34.0	24.0
TM5544	10 - 500	12.5	14.5	2.5	-15.5	27.0	33.0	5.0
TM5519	5 - 500	15.0	14.5	2.3	-18.0	29.0	39.0	5.0
TM7381	20 - 250	24.5	14.5	2.2	-31.0	27.0	32.0	15.0
TM6112	10 - 200	16.4	14.5	2.0	-20.0	28.0	38.0	15.0
TM9336	100 - 2300	17.5	14.0	4.5	-30.0	25.0	35.0	15.0
TM3094	50 - 2000	19.5	14.0	4.0	-35.0	27.0	46.0	5.0
TM9522	5 - 1500	20.5	14.0	5.0	-30.0	25.0	42.0	15.0

High Reverse Isolation Amplifiers (Example parts. See databook or specwave.com for full list)

Part Number	Frequency Range (MHz)	Gain - typ (dB)	Power: 1 dB Compression - typ (dBm)	Noise - typ (dB)	Rev. Isolation - typ (dB)	IP3 - typ (dBm)	IP2 - typ (dBm)	Power Supply DC - typ
QBH-172	1 - 100	15.0	16.0	3.3	-27.0	31.0	45.0	15.0
QBH-105	5 - 300	12.2	8.0	3.0	-27.0	22.0	30.0	15.0
QBH-155	5 - 300	15.0	22.0	6.2	-26.0	37.0	50.0	15.0
QBH-102	5 - 500	12.3	21.0	7.0	-23.0	34.0	49.0	15.0
QBH-132	15 - 700	14.8	16.0	6.5	-27.0	29.0	39.0	15.0
QBH-171	10 - 150	13.5	27.0	7.0	-25.0	40.0	50.0	15.0
QBH-137	10 - 200	12.7	21.0	3.5	-25.0	37.0	48.0	15.0
QBH-8719	30 - 145	21.5	25.0	2.5	-32.0	40.0	51.0	15.0
QBH-8115	30 - 145	21.5	25.0	2.5	-32.0	40.0	51.0	15.0
QBH-5847	30 - 1000	9.0	10.0	4.8	-22.0	23.0	33.0	15.0

Low Phase Noise Amplifiers (Example parts. See databook or specwave.com for full list)

Part Number	Frequency Range (MHz)	Gain - typ (dB)	1 dB Comp. - typ (dBm)	Noise - typ (dB)	Supply (DC)	Supply (mA)	Residual Phase Noise - typ (dBc/Hz)				
							100 Hz	1 kHz	10 kHz	100 kHz	1 MHz
TM5155PM	5-300	15	22	5.0	15	85	-162	-175	-178	-178	-178
TM6155PM	300-1000	12.5	19.5	4.0	15	50	-160	-174	-177	-177	-177
TM9119PM	10-1000	7	21	8.5	15	100	-165	-172	-177	-179	-179
TM5125PM	5-125	20.5	24	2.0	15	80	-162	-175	-176	-176	-176
TM5138PM	5-150	15	24.5	2.7	15	88	-158	-163	-176	-176	-176
TM5834PM	10-100	19.7	27.5	3.5	15	135	-162	-172	-176	-176	-176
TM5103PM	5-300	11.5	23	5.0	15	85	-160	-168	-175	-177	-178
TM5137PM	10-200	12.7	22.5	3.5	15	75	-165	-170	-175	-178	-178
TM5325PM	5-125	20.5	24	2.0	12	85	-170	-175	-175	-176	-175
TM5338PM	5-150	15	25	2.7	12	88	-162	-172	-175	-178	-178

Mixers

Spectrum Microwave's hybrid mixer product line (formerly Magnum Microwave) covers frequency ranges from 0.5 MHz to 26.5 GHz. Available in many industry standard surface mount, drop-in and connectorized housings, these mixers are ideal for high reliability applications. Spectrum mixers are offered in both double or triple balanced configurations for a broad frequency response. Additionally, other diode-based versions include frequency doublers to 20 GHz, Image Reject and I/Q Modulators to 16 GHz.

Features

- Industry standard package options
- Standard and custom designs available
- Double and triple balanced designs
- Over 150 standard designs available

Applications

- Mixers for multioctave, narrowband, ultra-broadband requirements
- Military communication systems
- Avionics
- Radar systems
- Phase detectors

Typical Performance Characteristics

Mixer Frequency Range . . . . . 0.5 MHz to 26.5 GHz

Frequency Doubler Frequency Range . . . . . 5 MHz to 20 GHz

Image Reject & I/Q Modulator Frequency Range . . . . . 5 MHz to 16 GHz

LO Power . . . . . from +7 to 23 dBm

Conversion Loss . . . . . from 5.5 to 10 dB typ

Operating Temperature . . . . . -40°C to +85°C typ

RF Mixers (Example parts. See databook or specwave.com for full list)

Part Number	Frequency (MHz) RF	Frequency (MHz) LO	Frequency (MHz) IF	LO Pwr (dBm)	CL (dB)	Package Style
M53T	10-1500	10-1500	DC-800	+7	7.0	TO-8
M56T	10-1500	10-1500	DC-800	+13	6.5	TO-8
M57T	10-1500	10-1500	DC-1000	+23	7.5	TO-8
M6xT	1000-2000	1000-2000	DC-1000	+7 to +23	8.0	TO-8
M73T	800-2400	800-3500	DC-1500	+7	9.0	TO-8
M24T	1-3400	1-3400	1-2000	+10	8.0	TO-8

Communication Band (Example parts. See databook or specwave.com for full list)

Part Number	Frequency (GHz) RF	Frequency (GHz) LO	Frequency (GHz) IF	LO Pwr (dBm)	CL (dB)	Package Style
MC5xMS-5&14	3.5-12.0	3.5-12.0	DC-4.0	+7 to +18	7.0	Microstrip Carrier
MC5xSMx-7&14	3.5-15.0	3.5-15.0	DC-4.0	+7 to +18	7.5	Surface Mount
MC5xMS-7&15	3.5-15.0	3.5-15.0	DC-4.0	+7 to +18	7.5	Microstrip Carrier
MC134MS-3&14	17.0 to 24.0	15.0 to 26.0	DC-4.0	+10	8.5	Microstrip Carrier
MC13xN-3	17.0 to 24.0	15.0 to 26.0	DC-4.0	+10	8.5	SMA Connect.

Octave Band Mixers (Example parts. See databook or specwave.com for full list)

Part Number	Frequency (GHz) RF	Frequency (GHz) LO	Frequency (GHz) IF	LO Pwr (dBm)	CL (dB)	Package Style
MO4xxG	4.0-8.0	3.5-8.5	DC-2.0	+7 to +19	8.5	SMA Connect.
MO4xxN	4.0-8.0	3.5-8.5	DC-2.0	+7 to +19	6.7	SMA Connect.
MO6xxG	6.0-12.5	5.0-15.0	DC-2.5	+7 to +19	8.8	SMA Connect.
MO6xxN	6.0-12.5	5.0-15.0	DC-2.5	+7 to +19	5.5	SMA Connect.

Mixers

Ultra Broadband Mixers (Example parts. See databook or specwave.com for full list)

Part Number	Frequency (GHz) RF	Frequency (GHz) LO	Frequency (GHz) IF	LO Pwr (dBm)	CL (dB)	Package Style
MM9xMS-14	2.0-18.0	2.0-18.0	2.0-5.0	+10 to +21	8.0	SMA Connect.
MM9xxG-40	0.5-18.0	0.5-18.0	DC-0.3	+7 to +19	7.0	SMA Connect.
MM9xxG-21	2.0-18.0	2.0-18.0	DC-0.6	+7 to +10	8.5	SMA Connect.
MM9xxG-3	2.0-18.0	2.0-18.0	.01-4.0	+10 to +21	7.3	SMA Connect.
MM9xxL-1	2.0-18.0	2.0-18.0	.01-4.0	+10 to +21	7.3	SMA Connect.
MM9xxL-15	2.0-18.0	2.0-18.0	2.0-8.0	+10 to +21	8.5	SMA Connect.
MM9xxG-2	2.0-18.0	2.0-18.0	1.0-12.0	+10 to +21	7.0	SMA Connect.
MM9xxN-1	2.0-19.0	2.0-19.0	1.0-9.0	+10 to +21	8.0	SMA Connect.
MM9xMS-6&-15	2.0-19.0	2.0-19.0	1.0-9.0	+10 to +21	8.0	Microstrip Carrier
MM9xMS-1&-17	1.8-20.0	1.8-20.0	DC-0.8	+7 to +18	7.2	Microstrip Carrier
MM134xG-1	1.5-26.5	1.5-26.5	DC-1.25	+9	9.5	SMA Connect.

Multi-Octave Band Mixers (Example parts. See databook or specwave.com for full list)

Part Number	Frequency (GHz) RF	Frequency (GHz) LO	Frequency (GHz) IF	LO Pwr (dBm)	CL (dB)	Package Style
MM4xxG-10	2.0-8.0	2.0-8.0	DC-1.5	+7 to +19	6.7	SMA Connect.
MM4xxL-10	2.0-8.0	2.0-8.0	DC-1.5	+7 to +19	6.7	SMA Connect.
MM4xSMx-10&-14	2.0-8.0	2.0-8.0	DC-1.5	+7 to +18	8.0	Surface Mount
MM4xxG-1	2.0-8.0	2.0-8.0	.01-4.0	+10 to +21	7.3	SMA Connect.
MM4xxG	2.0-8.0	2.0-8.0	2.0-6.0	+10 to +21	7.3	SMA Connect.
MM4xxL	2.0-8.0	2.0-8.0	2.0-6.0	+10 to +21	7.3	SMA Connect.
MM4xxN-1	1.5-9.0	1.5-9.0	.01-4.5	+10 to +21	8.0	SMA Connect.
MM4xMS&-15	1.5-9.0	1.5-9.0	.01-4.0	+10 to +21	6.5	Microstrip Carrier
MM4xMS-10&-17	2.0-9.0	2.0-9.0	DC-1.5	+7 to +18	8.0	Microstrip Carrier
MM6xxG-10	2.0-12.0	2.0-12.0	DC-1.5	+7 to +19	7.5	SMA Connect.
MM6xxL-10	2.0-12.0	2.0-12.0	DC-1.5	+7 to +19	7.5	SMA Connect.
MM8xMS-3&-14	5.0-15.0	3.0-17.0	DC-2.0	+7 to +14	8.5	Microstrip Carrier
MM9xSMx&-14	6.0-18.0	6.0-18.0	DC-2.5	+7 to +13	6.9	Surface Mount
MM9xxL	6.0-18.0	6.0-18.0	DC-3.0	+7 to +19	7.0	SMA Connect.
MM9xxN	6.0-18.0	6.0-18.0	DC-3.0	+7 to +19	7.0	SMA Connect.
MM9xxG-30	6.0-18.0	4.0-18.0	DC-4.0	+7 to +19	6.5	SMA Connect.
MM9xxN-11	6.0-18.0	4.0-18.0	DC-4.5	+7 to +19	7.0	SMA Connect.
MM9xxG	6.0-18.0	6.0-18.0	1.5-8.0	+10 to +21	7.7	SMA Connect.
MM9xMS-3&-13	4.0-20.0	4.0-20.0	DC-4.0	+7 to +18	8.5	Microstrip Carrier

I/Q Mixer/Modulators & Image Reject Mixers (Example parts. See databook or specwave.com for full list)

Part Number	Frequency (GHz) RF	Frequency (GHz) LO	Frequency (GHz) IF	LO Pwr (dBm)	CL (dB)	Package Style
MIQ2xMS-1	1.4-2.8	1.4-2.8	DC-0.5	+10 to +17	6.0	Microstrip Carrier
MIQ2xMS-2	1.9-4.2	1.9-4.2	DC-0.5	+10 to +17	6.0	Microstrip Carrier
MIQ3xMS-3	3.0-6.0	3.0-6.0	DC-0.3	+10 to +17	6.5	Microstrip Carrier
MIQ5xMS-1	5.6-9.0	5.6-9.0	DC-0.5	+10 to +17	5.0	Microstrip Carrier
MIQ5xSMD-1	5.6-9.0	5.6-9.0	DC-0.5	+10 to +17	5.0	Surface Mount
MIQ6xMS-1	5.5-13.5	5.5-13.5	DC-0.5	+10 to +17	5.3	Microstrip Carrier
MIQ6xSMD-1	5.5-13.5	5.5-13.5	DC-0.5	+10 to +17	5.3	Surface Mount
IRM5xMS-1	5.6-9.0	5.6-9.0	.05-.09	+10 to +17	5.0	Microstrip Carrier

Frequency Doublers (Example parts. See databook or specwave.com for full list)

Part Number	Frequency (GHz) Input	Frequency (GHz) Output	LO Power (dBm)	CL (dB)	Package Style
FD34H-1	0.005-2.8	0.01-5.6	+11	13.0	Flatpak
FD34SM-1	0.005-2.8	0.01-5.6	+11	13.0	Surface Mount
FD9xxN-1	1.5-10.0	3.0-20.0	+11 to +17	12.5	SMA Connect.
FD9xMS1	2.0-10.0	4.0-20.0	+11 to +17	13.0	Microstrip Carrier
FD9xSMx-1	2.0-10.0	4.0-20.0	+11 to +17	13.0	Surface Mount

VCOs

Spectrum Microwave's line of Voltage Controlled Oscillators (VCOs) features standard designs from a library of components designed by Radian Microwave, Magnum Microwave and Amplifonix. Frequency ranges from 25 MHz to 18 GHz.

Features

- Excellent linearity
- Low phase noise specified
- Available in industry standard packages
- Custom housings and specifications available
- Screening to MIL-STD-883B available
- Over 80 standard products available

Applications

- Transmitters and receivers
- Local oscillators
- Military and avionic electronics
- Synthesizers
- Test and measurement systems
- Telecommunications

Typical Performance Characteristics

Frequency Range ..... 25 MHz to 18 GHz

Tuning bandwidth ..... from 20% to 70%

Output Power ..... +7 to +10 dBm

Operating Temperature..... -40°C to +85°C typ

RF Band (Example parts. See databook or specwave.com for full list)

SMV2 Part Number	TO-8 Part Number	Frequency Range (MHz)	Power Output (dBm)	Phase* Noise (dBc/Hz)	Bias Volt. (V)	Bias Cur. (mA)	Temp. Bands (°C)	Tuning Range (V)
HV17SM-22	HV17T-2	25-50	+10	-121	+15	30	-55 to +100	0 to +15
HV17SM-12	HV17T-1	50-100	+10	-120	+15	30	-55 to +100	0 to +20
HV27SM-62	HV27T-6	75-150	+10	-125	+15	30	-55 to +100	0 to +20
HV27SM-112	HV27T-11	100-200	+10	-125	+15	25	-55 to +100	0 to +20
HV37SM-82	HV37T-8	150-300	+10	-110	+15	30	-55 to +100	0 to +20
HV37SM-112	HV37T-11	200-400	+10	-123	+15	15	-55 to +100	0 to +20
HV37SM-72	HV37T-7	300-600	+10	-110	+15	30	-55 to +100	0 to +25
HV47SM-12	HV47T-1	400-800	+10	-105	+15	30	-55 to +100	0 to +25
HV47SM-72	HV47T-7	500-1000	+10	-103	+15	30	-55 to +100	0 to +20

* Note: Phase Noise at 50 kHz offset

Microwave Band (Example parts. See databook or specwave.com for full list)

SMV2 Part Number	TO-8 Part Number	Frequency Range (MHz)	Power Output (dBm)	Phase* Noise (dBc/Hz)	Bias Volt. (V)	Bias Cur. (mA)	Temp. Bands (°C)	Tuning Range (V)
HV66SM-12	HV66T-1	1500-2500	+10	-105	+15	50	-55 to +85	0 to +20
HV87SM-42	HV87T-4	2000-4000	+10	-100	+15	50	-55 to +85	0 to +20
HVA87SM-32	HVA87T-3	2600-5200	+12	-92	+15	100	-40 to +85	0 to +18
HV83SM-12	HV83T-1	3500-4500	+10	-93	+15	50	-55 to +85	0 to +20
HV83SM-22	HV83T-2	4000-5000	+10	-92	+15	50	-55 to +85	0 to +20
HVA107SM-12	HVA107T-1	4000-8000	+7	-90	+15	86	0 to +65	0 to +20
HV93SM-12	HV93T-1	4700-6000	+7	-90	+15	65	-55 to +85	0 to +20
HVA103SM-12	HVA103T-1	5500-7000	+10	-87	+15	75	-30 to +65	0 to +21

* Note: Phase Noise at 50 kHz offset

Optional Clock Recovery (Example parts. See databook or specwave.com for full list)

SMV2 Part Number	TO-8 Part Number	Frequency Range (MHz)	Power Output (dBm)	Phase* Noise (dBc/Hz)	Bias Volt. (V)	Bias Cur. (mA)	Temp. Bands (°C)	Tuning Range (V)
HV71SM-32	HV71T-3	2488	+9	-87	+12	75	0 to +85	+4 to +8
HV71SM-142	HV71T-14	2666	+8	-87	+15	75	-30 to +65	+4 to +8
HVA121SM-12	HVA121T-1	9958	+8	-80	+15	100	0 to +85	+3 to +7
HVA121SM-22	HVA121T-2	10650	+8	-80	+15	100	0 to +85	+3 to +7
HVA131SM-52	HVA131T-5	12450	+10	-85	+15	100	0 to +85	+3 to +7

* Note: Phase Noise at 50 kHz offset

DROs

Spectrum Microwave's stabilized oscillator products (formerly Magnum Microwave) provides engineers designing microwave radio links, transponders and synthesizers the high performance that is required for today's systems. These Dielectric Resonator Oscillators (DROs) provide high frequency stability with low phase noise while minimizing power drain.

Features

- Free running, mechanically tuned
- AFC voltage tunable
- Phase locked, internal and external reference
- Hermetically sealed housings

Applications

- LMDS
- Fiber optic clock recovery
- Radio links
- Satellite terminals
- Synthesizers

Typical Performance Characteristics

Frequency Range . . . . . 2 GHz to 21 GHz

Tuning bandwidth . . . . . up to +/- 25 MHz

Operating Temperature . . . . . -40°C to +85°C typ

Free Running, Mechanically Tuned (Example parts. See databook or specwave.com for full list)

Part Number	Frequency Range (GHz)	Mech Tuning BW (MHz)	Power Output (dBm)	Phase Noise @ 100kHz offset				Operating Temp (°C)
				2.5 (GHz)	6 (GHz)	12 (GHz)	20 (GHz)	
MDR2100-xxxxx	2.5-6.0 6.0-21.0	±10 ±20	+10	-130	-124	-118	-113	-20 to +65
Moisture Sealed								
MDR2560-xxxxx	4.5-16.0	±10	+10	-125	-122	-117	-111	-40 to +85

AFC Voltage Tunable (Example parts. See databook or specwave.com for full list)

Part Number	Frequency Range (GHz)	Mech Tuning BW (MHz)	Power Output (dBm)	Phase Noise @ 100kHz offset				Operating Temp (°C)
				2.5 (GHz)	6 (GHz)	12 (GHz)	20 (GHz)	
MDR3100-xxxxx	2.5-6.0 6.0-21.0	±10 ±20	+10	-128	-122	-116	-108	-20 to +65
For Fiber Optic Clock Recovery Applications								
MDR3001-02 MDR3001-03	9.95328 10.667	±25	+11			-110		-10 to +80

Phase Locked, Internal Reference (Example parts. See databook or specwave.com for full list)

Part Number	Frequency Range (GHz)	Mech Tuning BW (MHz)	Power Output (dBm)	Phase Noise @ 100kHz offset				Operating Temp (°C)
				2.5 (GHz)	6 (GHz)	12 (GHz)	20 (GHz)	
MDR5100-xxxxx	3.0-6.0 6.0-21.0	±10 ±20	+13	-120	-120	-114	-105	-20 to +65
For LMDS Applications								
MDR5530-xxxxx	9.0-13.0		+17			-110		-40 to +85

Phase Locked, External Reference (Example parts. See databook or specwave.com for full list)

Part Number	Frequency Range (GHz)	Mech Tuning BW (MHz)	Power Output (dBm)	Phase Noise @ 100kHz offset				Operating Temp (°C)
				2.5 (GHz)	6 (GHz)	12 (GHz)	20 (GHz)	
MDR6100-xxxxx	3.0-6.0 6.0-21.0	±10 ±20	+13	-124	-120	-114	-105	-20 to +65

SPECTRUM MICROWAVE • 2144 Franklin Dr. N.E. • Palm Bay, FL • Phone: 888-553-7531 • Fax: 888-553-7532
SPECTRUM MICROWAVE GmbH • Hansastrasse 6 • 91126 Schwabach, Germany • Phone: (49)-9122-795-0 • Fax: (49)-9122-795-58
www.specwave.com

Attenuators, Detectors & Switches

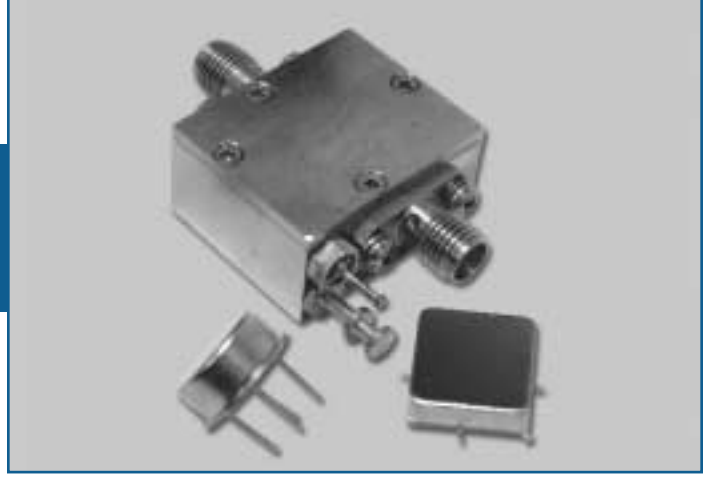

Attenuators

Spectrum Microwave's Attenuator products are offered in both Digital and Voltage Variable configurations. Formerly the product line from Amplifonix, Digital Attenuators are available in frequency ranges from 10 to 2000 MHz. Integrated TTL drivers simplify system integration. Choose either PIN Diode or GaAs FET based switching, depending upon switching speed requirements. Digital attenuation steps are available from 0.1 dB to 63.5 dB. When voltage variable gain control is required, Voltage Variable Attenuators (VVAs) are available in frequency ranges from 5 to 2000 MHz.

Features

- Digital attenuation values from 0.1 dB to 63.5 dB
- Digital attenuators with 4, 5 or 7 steps
- Switching speeds as low as 20 ns
- Analog attenuation values from 15 to 40 dB
- TTL Control

Applications

- Military communication systems
- Avionics
- Radar systems
- Medical devices
- Test and measurement systems

Typical Performance Characteristics

Frequency Range ..... DC to 2000 MHz

Attenuation Ranges ..... from 0.1 dB to 63.5 dB

Insertion Loss..... as low as 1.5 dB

Digital Attenuators

Part Number	Frequency Range (MHz) Low	High	Steps	Attenuation Range (dB)	Insertion Loss (dB) Typ.	Max.	Switching Speed (µs)	Control	Package Type	Power - typ (DC)	(mA)
TAN6007	kHz	50	4	2 to 30	1.5	2.0	0.03	TTL	SG-4	±5	3
TAD5006	10	150	4	2 to 30	2.5	3.3	10	TTL	DP-5	+5	22
TAD5007	10	150	4	3 to 45	2.5	3.3	10	TTL	DP-5	+5	25
TAN6008	50	500	4	2 to 30	2.0	3.3	0.03	TTL	SG-4	±5	3
TAD6006	50	500	4	2 to 30	2.2	3.0	0.02	TTL	DP-11	±5	3
TAD6005	50	300	5	1 to 31	3.0	4.0	0.03	TTL	DP-5	+5/-12	3/4
TAD2104	10	2000	5	1 to 31	6.5	8.5	0.02	TTL	DP-5	+5/-12	5/8
TAD5008	50	250	5	2 to 62	4.2	5.5	2.5	TTL	DP-5	+5	10
TAD5009	50	250	7	0.1 to 12.7	3.0	4.2	2.5	TTL	DP-8	+5	10
TAD5010	50	250	7	0.5 to 63.5	6.0	7.5	10	TTL	DP-8	+5	25

Voltage Variable (Analog) Attenuators

Part Number	Frequency Range (MHz) Low	High	Insertion Loss Typ.	Max.	Attenuation (dB) Typ.	Max.	VSWR Max.	Control Voltage (Volts)	Control Current (mA)	Power Supply - typ (DC)	(mA)
TG9015	5	1000	2.0	2.5	20	15	2.0:1	0 to –10	0 to 7	15	7
TG9005	0.1	1400	2.0	2.5	26	25	2.0:1	0 to +15	0 to 7.5	15	10
TG9001	5	2000	2.9	2.5	34	18	2.0:1	0 to +15	0 to 6.5	15	10
TG9006	5	1600	2.0	2.5	34	18	2.0:1	0 to +12	0 to 6.5	12	10
TG9025	5	2000	2.0	3.0	33	20	2.0:1	0 to +15	0 to 7	15	10
TG9030	100	2000	2.5	3.5	40	25	2.2:1	0 to +15	0 to 10	15	10

Attenuators, Detectors & Switches

Detectors

Spectrum Microwave produces temperature compensated detectors, which operate from 10 MHz to 2 GHz. Analog/Level Detectors convert a range of RF input powers (typically from -20 dBm to +10 dBm) to a corresponding DC output voltage level. Threshold Detectors, using an external resistor or threshold voltage, output a TTL compatible signal when the RF level exceeds the preset threshold.

Features

- Wide bandwidths
- Fast switching speeds
- Low VSWR

Applications (Detectors & Switches)

- Military communication systems
- Avionics
- Radar systems
- Medical devices
- Test and measurement systems

Typical Performance Characteristics

Frequency Range ..... 10 MHz to 2 GHz
Output Power ..... 5 to 12 mA
VSWR..... 1.7 to 2.2:1

Threshold Detectors

Part Number	Frequency Range (MHz) Low	High	Input Flatness - typ (dB)	Input Operation (dBm) Typ.		Max.	VSWR In/Out Max.	Power (DC)	(mA)
TMJ9904	10	2000	±1.0	-20	to	+10	2.2:1	+15	5
TMJ9902	10	2000	±0.7	-10	to	+10	2.0:1	+15	12
PLJ9962	100	2000	±1.0	-10	to	+10	2.0:1	+15	12

Analog Level Detectors

Part Number	Frequency Range (MHz) Low	High	Detected Voltage - typ (mV)	Input Flatness - typ (dBm)	Tangential Sensitivity Typ.	Max.	VSWR In/Out Max.	Power (DC)	(mA)
TMJ9910	10	1000	120	±1.0	-45	40	1.7:1	+15	5
TMJ9911	10	2000	120	±1.0	-45	40	1.7:1	+15	12
LNJ9901	20	2000	120	±0.3	-38	-	2.2:1	+15	12

Switches

Spectrum Microwave's line of SPST to SP8T Switches (formerly Amplifonix) range in frequencies from DC to 3000 MHz. We offer both Pin Diode and GaAs designs for both high speed applications as well as higher isolation requirements.

Features

- Fast switching speeds
- High isolation

Typical Performance Characteristics

Frequency Range ..... DC to 3000 MHz
Switching Speed (GaAs)..... 6-40 ns
Isolation..... 40 to 70 dB

Switches - PIN Diode

Part Number	Type (Throws)	Frequency Range (MHz) Low	High	Insertion Loss Typ.	Max.	Isolation - typ	Switching Speed (µs)	Termination	Control	Package	Power (DC)	(mA)
TWM5000	SPST	10	1500	1.2	1.7	50	0.15	50 Ohms	TTL	T-5	5	5
TWD5001	SPDT	10	1000	1.0	2.0	45	3	50 Ohms	TTL	DP-3	15	15
TWD5015	SPDT	20	1000	1.2	2.0	45	0.7	50 Ohms	TTL	DP-3	5	15

Switches - GaAs

Part Number	Type (Throws)	Frequency Range (MHz) Low	High	Insertion Loss - typ (dB)		Isolation - typ (dB)	Switching Speed (µs)	VSWR - typ	Termination	Control	Package
TWP2214	SPST	DC		3000	0.8	50	6	1.25:1	50	0/-5V	FP-12
TWK2213	SPST	DC		3000	0.7	40	10	1.15:1	50	0/-5V	T-2
TWP2209	SPST	DC		3000	1	40	6	1.25:1	50	0/-5V	FP-7

Coaxial Ceramic Resonators

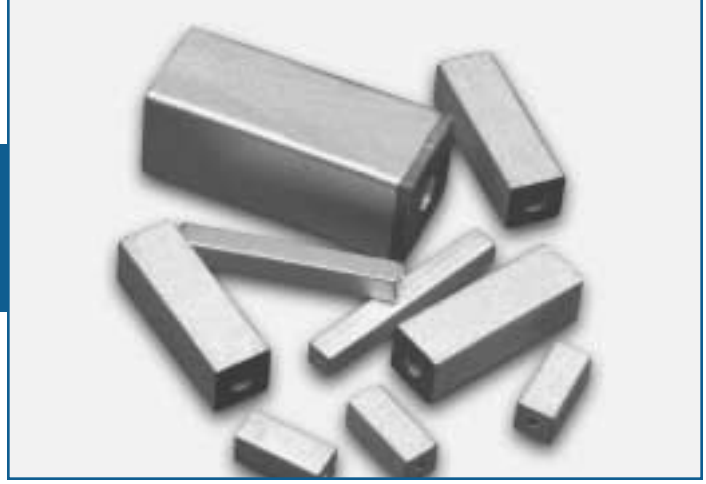

Features

- Available in 2 mm to 12 mm sizes standard
- Easy handling and assembly
- Wide frequency range (400 MHz to 5 GHz)
- Available with and without tabs
- Frequency tolerance to ±0.5%
- Temperature stable (±5 ppm/°C)
- High Q (200 to 800)
- Available in tape and reel. (Specs vary based on frequency and cross section per EIA-481 standards.) Please consult the factory for specifications.
- RoHS compliant

Applications

- Dielectric Filters
- Oscillators (DRO/VCO)
- GPS and car navigation systems
- HDTV, DBS, CS and CATV tuners
- Home security equipment
- UFH (LC) coupled amplifiers

Part Numbering System

Example: **CRF3-0445B-QST**

CR	F	3	-	0445	A	-	Q	S	T
Series	**Resonator Cross Section**	**Dielectric Constant**		**Resonant Frequency**	**Frequency Tolerance**		**Wavelength Type**	**Plating Type**	**Mounting Type**
CR- Ceramic Resonators	**B** = 2 mm **C** = 3 mm **D** = 4 mm **F** = 6 mm **L** = 12 mm	**1** = K 21 **2** = K 37 **3** = K 90		f_0 (MHz)	**A** = 0.5% **B** = 1.0% **C** = Custom		**Q** = 1/4 wave **H** = 1/2 wave	Thick Film Silver	**T** = Mounting tab **Blank** = No tab **S** = Surface Mount

CR Calculations*

Type	Calculates Length from Frequency ℓ (cm) from f_0 (GHz)	Calculates Characteristic Impedance Z_0 from OD, ID, and K	Calculates Input Impedance Z_{in}	Calculates the Equivalent L-C Network that would replace the Inductor at f_0 L-C Equivalent Network
λ/4	$\ell = \frac{30\ cm \bullet GHz}{\sqrt{K}} \frac{1}{4f_0}$	$Z_0 \approx \frac{\eta_0}{2\pi} \frac{1}{\sqrt{K}} \ln\left(\frac{1.079 \bullet OD}{ID}\right)$	$Z_{in} \approx Z_0\left[\frac{\pi}{4Q} + j\tan\left(\frac{\pi}{2}\frac{f}{f_0}\right)\right]$	$L_{eq} = \frac{4Z_0}{\pi\omega_0}$ $C_{eq} = \frac{\pi}{4\omega_0 Z_0}$
λ/2	$\ell = \frac{30\ cm \bullet GHz}{\sqrt{K}} \frac{1}{2f_0}$		$Z_{in} \approx Z_0\left[\frac{\pi}{2Q} + j\cot\left(\pi\frac{f}{f_0}\right)\right]$	$L_{eq} = \frac{2Z_0}{\pi\omega_0}$ $C_{eq} = \frac{\pi}{2\omega_0 Z_0}$

* Where *30 cm • GHz* is the free space propagation velocity, *K* is the dielectric constant, $\eta_0 = 377\Omega$ is the intrinsic impedance of free space, 1.079 is *normalized equivalent diameter* of a square 'coaxial' inductor, *Q* is the Q-factor of the CR and the "low-loss assumption" is applied. The CR may be replaced by an equivalent parallel L-C circuit with the values described.

Coaxial Ceramic Resonators

Reference Outlines

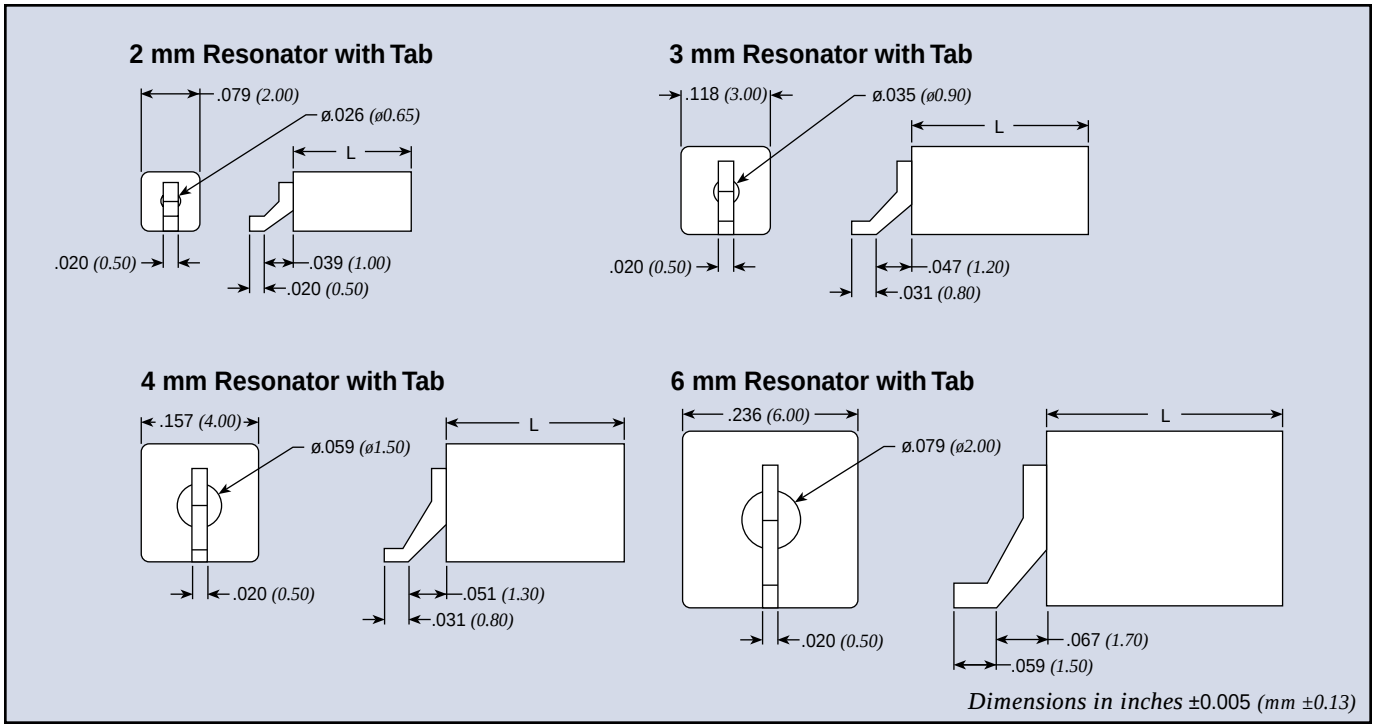

SPECTRUM MICROWAVE • 2144 Franklin Dr. N.E. • Palm Bay, FL • Phone: 888-553-7531 • Fax: 888-553-7532
SPECTRUM MICROWAVE GmbH • Hansastrasse 6 • 91126 Schwabach, Germany • Phone: (49)-9122-795-0 • Fax: (49)-9122-795-58
www.specwave.com

SPECTRUM MICROWAVE INC.
A Spectrum Control Business

Custom Microwave Filters

Section Index	Page
Filter Topology Selection	30-33
Filter Considerations	34
Frequency Ranges	35
Lumped Element Filters	36-38
Cavity Filters	39-41
Waveguide Filters	42-43
Tubular Filters	44-45
Suspended Substrate Filters	46-47
Bandpass Filters Ceramic Resonator Type	48-50
Bandpass Filters Monobock Type	51-54
Duplexers Ceramic Resonator Type	55-56
Duplexers Monoblock Type	57-60
Standard Filter Housings	61-63

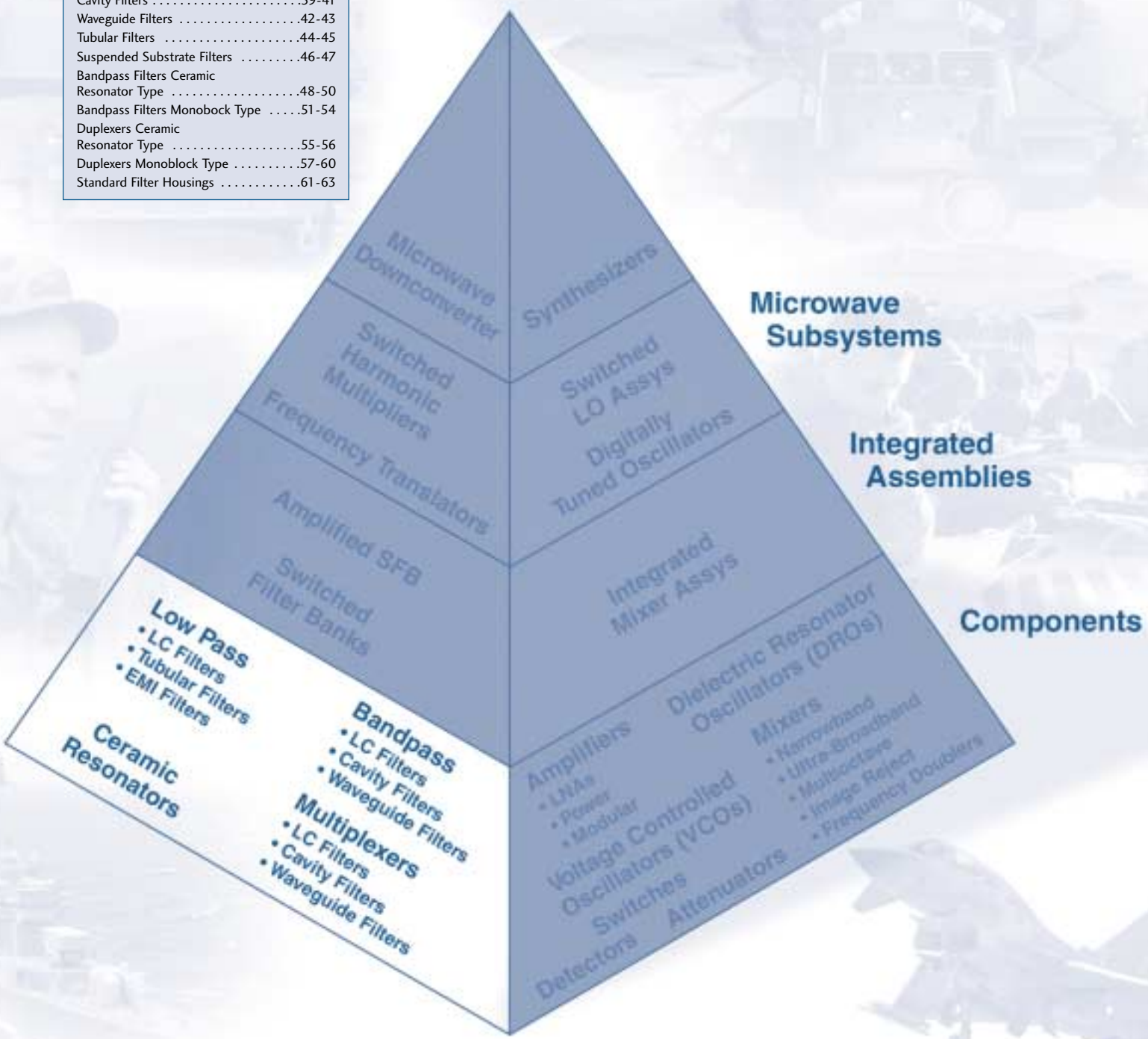

Filter Topology Selection - Bandpass

	Step 1 Select Frequency								
CENTER FREQUENCY	<2 GHz			2-6 GHz			>6 GHz		
	Step 2 Select % Bandwidth								
	<4%	4-20%	>20%	<4%	4-20%	>20%	<4%	4-20%	>20%
	Step 3 Select Filter Topology								
SMALLER	Ceramic	Lumped Element	Lumped Element	Ceramic	Lumped Element	Lumped Element	Lumped Element	Lumped Element	Lumped Element
Size	Tubular	Tubular	Tubular	Cavity	Tubular	Suspended Substrate	Cavity	Cavity	Suspended Substrate
LARGER	Cavity	Cavity	Cavity	Wave-guide	Cavity	Cavity	Wave-guide	Wave-guide	Cavity

STANDARD CENTER FREQUENCIES FROM 10 kHz - 40 GHz (Typical 2 - 13 poles)

Series	Filter Topology	Size*	Range of 3dB Center Freq (f_C)	Power Rating**	Page #
BA	Tubular	1/4" Dia.x L	140 MHz - 6 GHz	3 Watts CW	44
BC	Tubular	1/2" Dia.x L	50 MHz - 3.5 GHz	20 Watts CW	44
BE	Tubular	1 1/8" Dia.x L	30 MHz - 1.0 GHz	200 Watts CW	44
BR	Lumped Element	5/8" x 3/4" x L	1 MHz - 120 MHz	10 Watts CW	36
BM	Lumped Element	3/8" x 3/8" x L	1 MHz - 6 GHz	3 Watts CW	36
BS	Lumped Element	1/4" x 1/2" x 1/2"	10 MHz - 5 GHz	3 Watts CW	36
BT	Lumped Element	0.6" dia. x 0.35"	10 MHz - 2 GHz	3 Watts CW	36
C	Cavity (combline, Interdigital)	Consult Factory	500 MHz - 2.5 GHz	10 Watts CW	39
C	Cavity (combline, Interdigital)	3/4" x 3/4" x L	2.5 GHz - 5 GHz	10 Watts CW	39
C	Cavity (combline, Interdigital)	1/2" x 1/2" x L	5 GHz - 40 GHz	10 Watts CW	39
WG	Waveguide	Consult Factory	1 GHz - 40 GHz	200 Watts CW	42
CS	Ceramic Dielectric Resonator Filter	Consult Factory	400 MHz - 3 GHz	3 Watts CW	48
SS	Suspended Substrate	Consult Factory	2 GHz - 26.5 GHz	10 Watts CW	44

* L depends on cutoff frequency and complexity

** When quoted by factory

% Bandwidth: Bandwidth divided by the center frequency.

Bandwidth: The width of the passband of a bandpass filter is usually expressed as the frequency difference between lower and upper relative 3 dB points.

Check out our latest web site tools @ www.specwave.com

SPECTRUM MICROWAVE • 2144 Franklin Dr. N.E. • Palm Bay, FL • Phone: 888-553-7531 • Fax: 888-553-7532
SPECTRUM MICROWAVE GmbH • Hansastrasse 6 • 91126 Schwabach, Germany • Phone: (49)-9122-795-0 • Fax: (49)-9122-795-58

Filter Topology Selection - Lowpass ┐

Step 1

Select Frequency

Step 2

Select Filter Topology

CUTOFF FREQUENCY	<2 GHz	2-10 GHz	>10 GHz
SMALLER	Lumped Element	Lumped Element	Lumped Element
Size	Tubular	Tubular	Suspended Substrate
LARGER	—	Suspended Substrate	—

STANDARD LOWPASS FROM 1 kHz - 18 GHz (Typical 3 - 25 elements)

Series	Filter Topology	Size*	Range of 3dB Cutoff Freq (f_C)	Power Rating**	Page #
LA	Tubular	1/4" Dia.x L	150 MHz - 10 GHz	5 Watts CW	44
LC	Tubular	1/2" Dia.x L	50 MHz - 5 GHz	10 Watts CW	44
LE	Tubular	1 1/8" Dia.x L	30 MHz - 1.0 GHz	40 Watts CW	44
LR	Lumped Element	5/8" x 3/4" x L	500 kHz - 500 MHz	10 Watts CW	36
LM	Lumped Element	3/8" x 3/8" x L	5 MHz - 10 GHz	3 Watts CW	36
LS	Lumped Element	1/4" x 1/2" x 1/2"	10 MHz - 5 GHz	3 Watts CW	36
LT	Lumped Element	0.6" dia. x 0.35"	10 MHz - 2 GHz	3 Watts CW	36
SS	Suspended Substrate	Consult Factory	300 MHz - 40 GHz	10 Watts CW	46

* L depends on cutoff frequency and complexity

** When quoted by factory

Typical VSWR and IL correlations to Frequency

Cutoff Freq. (f_C)	VSWR	Max I.L.
1 kHz - 600 kHz	1.5:1 Max. up to 0.9 f_C	1 Max. dB @ $f_C/2$
600 kHz - 20 MHz	1.5:1 Max. up to 0.9 f_C	0.75 Max. dB @ $f_C/2$
20 MHz - 7 GHz	1.5:1 Max. up to 0.9 f_C	0.5 Max. dB @ $f_C/2$
7 GHz - 10 GHz	1.8:1 Max. up to 0.9 f_C	0.5 Max. dB @ $f_C/2$

Standard Lowpass Filter Family - Page 44

Check out our latest web site tools @ www.specwave.com

Filter Topology Selection - Highpass

CUTOFF FREQUENCY	<2 GHz	2-10 GHz	>10 GHz
		Step 1 Select Frequency	
SMALLER ↑ Size ↓ LARGER	Lumped Element	Lumped Element	Suspended Substrate
	Suspended Substrate	Suspended Substrate	—
	—	—	—

Step 2 Select Filter Topology

STANDARD HIGHPASS FROM 5 kHz - 0.4 GHz (3 - 25 elements)

Series	Filter Topology	Size*	Range of 3dB Cutoff Freq (f_C)	Power Rating**	Page #
HR	Lumped Element	5/8" x 3/4" x L	1 MHz - 250 MHz	5 Watts CW	36
HM	Lumped Element	3/8" x 3/8" x L	5 MHz - 400 MHz	3 Watts CW	36
HS	Lumped Element	1/4" x 1/2" x 1/2"	10 MHz - 5 GHz	3 Watts CW	36
SS	Suspended Substrate	Consult Factory	2 GHz - 26.5 GHz	10 Watts CW	46

* L depends on cutoff frequency and complexity

** When quoted by factory

Typical VSWR and IL correlations to Frequency

Cutoff Freq. (f_C)	Max I.L.
5 kHz - 600 kHz	1.3 dB @ 2 x f_C
600 kHz - 20 MHz	0.9 dB @ 2 x f_C
20 MHz - 400 MHz	0.6 dB @ 2 x f_C

# of elements	VSWR
3 - 7	1.5:1 Max. @1.25 fc to 10f_C
9 - 25	1.5:1 Max. @1.15 fc to 10f_C

Note: to 10 GHz maximum

Check out our latest web site tools @ www.specwave.com

SPECTRUM MICROWAVE • 2144 Franklin Dr. N.E. • Palm Bay, FL • Phone: 888-553-7531 • Fax: 888-553-7532
SPECTRUM MICROWAVE GmbH • Hansastrasse 6 • 91126 Schwabach, Germany • Phone: (49)-9122-795-0 • Fax: (49)-9122-795-58
www.specwave.com

Filter Topology Selection - Band Reject

Step 1

Select Frequency

Step 2

Select Filter Topology

REJECT FREQUENCY	<2 GHz	2-6 GHz	>6 GHz
SMALLER	Lumped Element	Lumped Element	Cavity
Size	Ceramic	Cavity & Suspended Substrate	Suspended Substrate
LARGER	Cavity	Waveguide	Waveguide

STANDARD BAND REJECT FROM 10 kHz - 40 GHz (Typical 2 - 13 poles)

Series	Filter Topology	Size*	Range of 3dB Reject Freq (f_R)	Power Rating**	Page #
NR	Lumped Element	5/8" x 3/4" x L	1 MHz - 120 MHz	10 Watts CW	36
NM	Lumped Element	3/8" x 3/8" x L	1 MHz - 6 GHz	3 Watts CW	36
NS	Lumped Element	1/4" x 1/2" x 1/2"	10 MHz - 5 GHz	3 Watts CW	36
NT	Lumped Element	0.6" dia. X 0.35"	10 MHz - 2 GHz	3 Watts CW	36
C	Cavity (combline, Interdigital)	Consult Factory	500 MHz - 2.5 GHz	10 Watts CW	39
C	Cavity (combline, Interdigital)	3/4" x 3/4" x L	2.5 GHz - 5 GHz	10 Watts CW	39
C	Cavity (combline, Interdigital)	1/2" x 1/2" x L	5 GHz - 40 GHz	10 Watts CW	39
WG	Waveguide	Consult Factory	1 GHz - 40 GHz	200 Watts CW	42
CS	Ceramic Dielectric Resonator Filter	Consult Factory	400 MHz - 3 GHz	3 Watts CW	48
SS	Suspended Substrate	Consult Factory	2 GHz - 26.5 GHz	10 Watts CW	46

* L depends on cutoff frequency and complexity

** When quoted by factory

Check out our latest web site tools @ www.specwave.com

Filter Design Considerations

At Spectrum Microwave, we select the smallest filter type to satisfy our customer's performance parameters. In most cases, the size of a unit is limited by the insertion loss or power handling requirements. In addition, trade-offs between the various electrical and mechanical parameters must be considered when determining the most efficient topology for a given application. Following is a brief discussion of some common trade-offs:

Insertion Loss vs Size

The unloaded Q of the filter elements determines the insertion loss of a given filter. Inherently, the Q of the filter elements is proportional to their size. As a result larger filters tend to exhibit lower insertion loss.

Insertion Loss vs Stopband Rejection

Additional stopband rejection is achieved by adding additional filter sections. Each section that is added also increases insertion loss which implies that more rejection comes at the expense of higher insertion loss.

Passband Flatness vs Stopband Rejection

As the number of sections is increased, the passband edges round off due to the effects of finite Q. This causes more amplitude variation over the passband. Therefore, more rejection comes at the expense of degraded passband flatness.

Stopband Rejection vs Group Delay Variation

Each additional filter section not only increases the absolute value of the group delay, but the variation of the group delay over the passband as well. Higher rejection comes at the expense of increased passband group delay variation.

These trade-offs, as well as others, must be considered when selecting the appropriate filter topology for a given application. Our experienced engineering team will determine the optimal solution for the requirement based on our customer's inputs and priorities.

Unloaded Q vs Passband Performance

The lack of sufficient unloaded Q in a filter can have a significant effect not just on insertion loss, but on the filter's passband flatness as well. Figure 1 below illustrates the passband amplitude response of an "X" dB ripple Chebyshev bandpass filter with infinite unloaded Q. The ripple level is determined by the reflective (VSWR) losses in the filter and is determined strictly by the Chebyshev transfer function chosen.

FIGURE 1

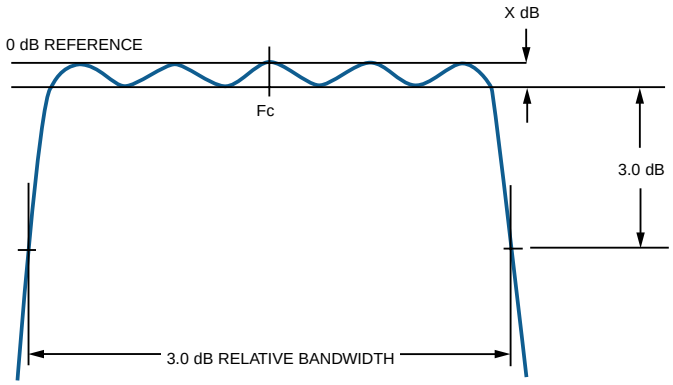

Figure 2 shows the passband amplitude response of the same filter with finite unloaded Q. This response, to varying degrees, is what is typically seen in practice. The rounding of the passband near the band edges is due strictly to the dissipative losses in the filter. This rounding is even more pronounced with small percentage bandwidth filters. The ripple of the transfer function is superimposed on the amplitude response. It is clearly evident that specifying a passband flatness or relative bandwidth is more definitive than specifying a ripple or VSWR bandwidth. At Spectrum Microwave, we will select the most appropriate filter topology and mechanical configuration to maximize unloaded Q, based on customer requirements.

FIGURE 2

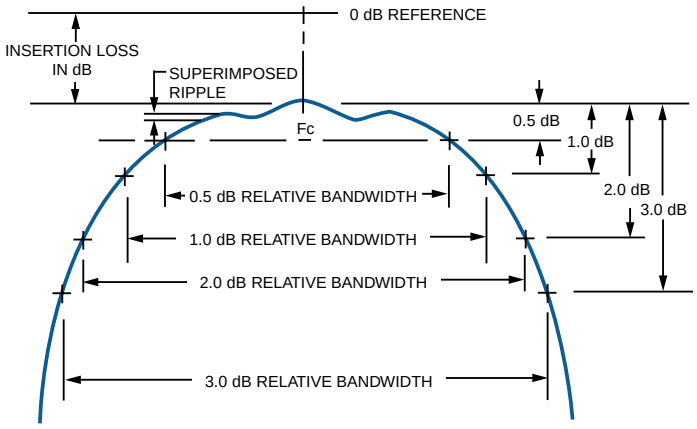

Filter Topology Frequency Ranges

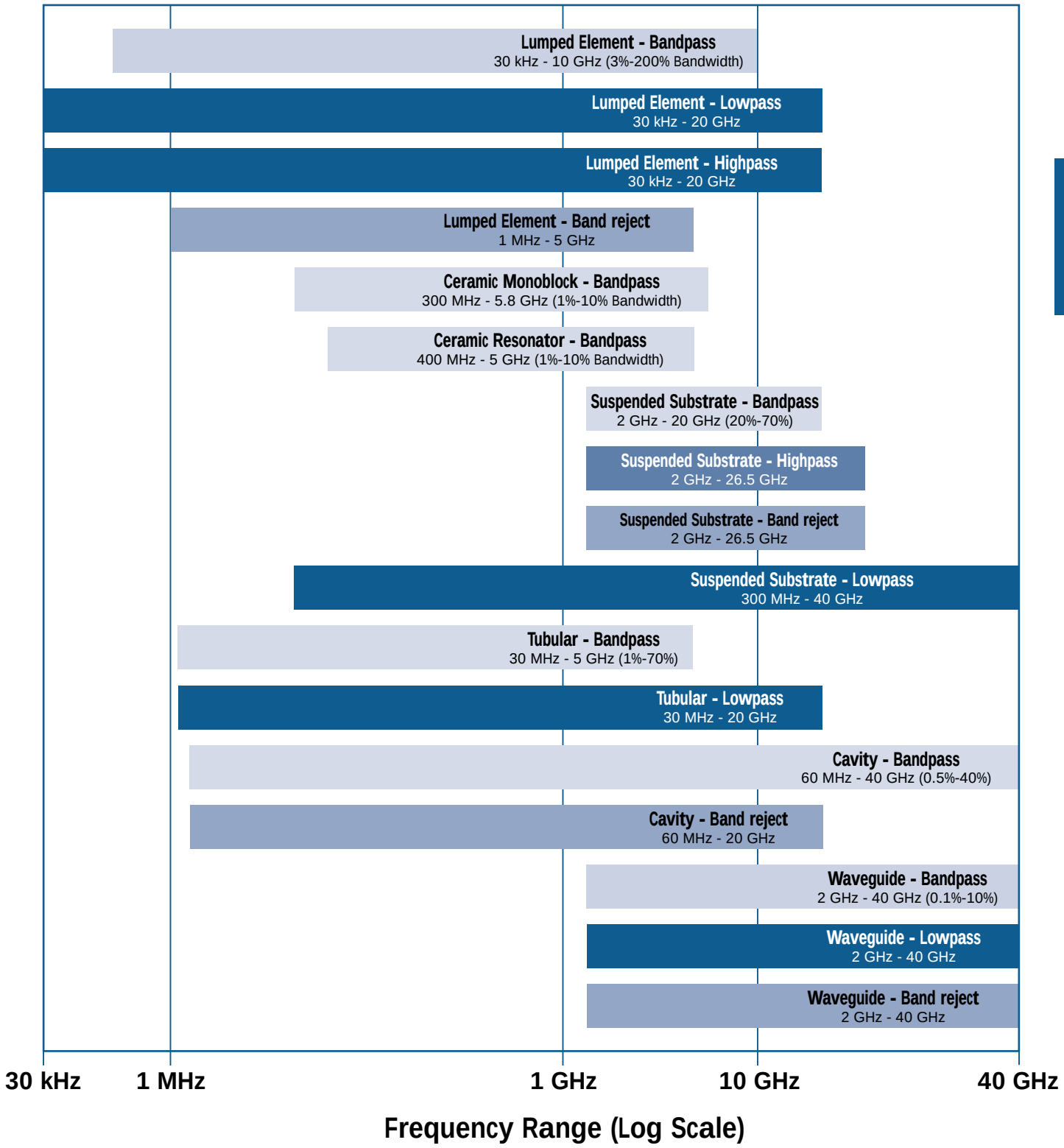

Lumped Element Filters

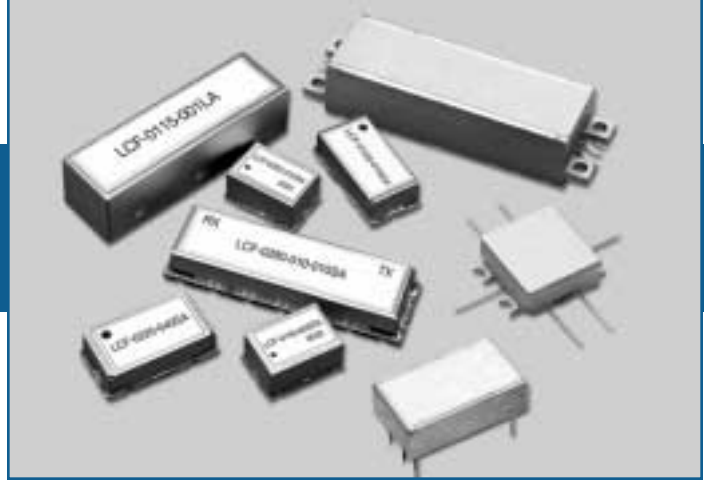

LC/Discrete/Chip and Wire

Lumped element filters consist of discrete capacitors and inductors soldered to a substrate in various schematic configurations. These compact designs are particularly suitable for applications where size is critical. This topology is suitable for lowpass, highpass, bandpass, bandstop and multiplexing applications

Features

- Small size, low profile
- Leaded, surface mount, PC mount and connectorized
- Wide range of transfer functions
- 30 kHz to 20 GHz

Applications

- Military Communications
- IFF
- E-911
- CATV
- Base stations

Typical Performance Characteristics

Bandwidth . . . . . 3% to 200%
Q factor . . . . . up to 400
Impedance . . . . . 50 Ohm standard
Temperature Range . . . . . -55 to 85°C
Temperature Stability . . . . . ± 5 ppm typ
Shock . . . . . 30 G
Vibration . . . . . 10 G
Humidity 0-95%
Power . . . . . 1-15 W typ
Packaging Options . . . . . Coaxial connectors, Axial/radial feed-thru, Wide variety of connectors

Filter Frequency Ranges

Bandpass . . . . . 30 kHz - 10 GHz
Highpass . . . . . 30 kHz - 20 GHz
Lowpass . . . . . 30 kHz - 20 GHz
Band reject . . . . . 1 MHz - 5 GHz
Duplexer/Multiplexer . . . . . 30 kHz - 8 GHz

Custom Part Number Examples (Typical part numbers, consult factory for additional designs)

Part Number	Topology	Passband (MHz)	Insertion Loss (dB) (max.)	VSWR (max.)	Attenuation (dBc @ MHz)	Size (inches) ex connectors	Comments	Reference Outlines
LR411-9SS-EHP-X		225 to 400	0.55	1.35:1	60 @ 450-4000	1.00 x 3.88 x 1.93	Lowpass; avg pwr 150W @ CW, 450W @ peak	A
LM23G-13SSM		6,000 to 22,000	1.0	1.5:1	40 @ 28,000 to 40,000	0.40 x 0.40 x 0.60	High frequency, Lowpass filter	
BM10.7-0.72-3PP		10.7	4.0	1.5:1	55 @ DC-8	0.38 x 0.38 x 1.25		B
BM21.4-1.04-6PP		20.88 to 21.92	3.0	1.5:1	60 @ 19.76 & 23.04	0.40 x 0.63 x 1.75		
BM800-65-5XPXP-S		775 to 825	4.0	1.5:1	50 @ DC-685	0.38 x 0.38 x 1.00	Drop in filter with axial pins	C
BS1401-670-3X		1,217 to 1,585	0.5	1.25:1	10 @ 900 & 1900	0.21 x 0.50 x 1.00	Surface mount	
HM1955-8SS-E		2,000 to 18,000	1.5	1.8:1	60 @ DC-1500	0.45 x 0.70 x 1.75	Elliptic bandpass filter	
BS4700-800-7		4,400 to 5,000	3.0	1.4:1	60 @ 5600	0.31 x 0.38 x 1.25	Surface mount	D
BR70-14-7ESS		61-79	2.5	1.5:1	40 @ DC-57,784 & 84-110	0.63 x 0.75 x 3.00	Elliptic bandpass filter	E
NR76.75-10-4BBM		DC to 70 & 83.5 to 200	3.0	1.5:1	50 @ 76.5	0.63 x 0.75 x 4.00	Band reject filter for NMR	F
HR450-11BBM		540-750	0.5	1.5:1	80 @ DC - 250	0.63 x 0.75 x 2.00	Highpass for NMR, 100W avg pwr, 300W peak	
NR98-40-7SS		DC to 76 & 122 to 1,000	2.1	1.5:1	35 @ 88-108	0.63 x 0.75 x 3.00	Band reject for FM frequencies	

SPECTRUM MICROWAVE • 2144 Franklin Dr. N.E. • Palm Bay, FL • Phone: 888-553-7531 • Fax: 888-553-7532
SPECTRUM MICROWAVE GmbH • Hansastrasse 6 • 91126 Schwabach, Germany • Phone: (49)-9122-795-0 • Fax: (49)-9122-795-58
www.specwave.com

Lumped Element Filters

Reference Outlines (Standard LC filter housing on page 61)

Figure A

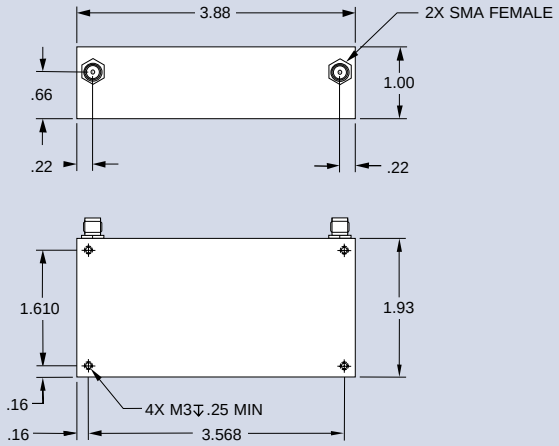

Figure D

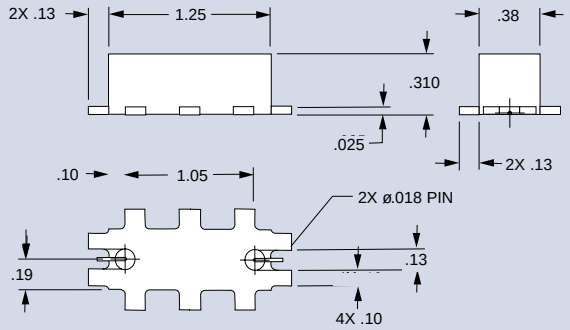

Figure B

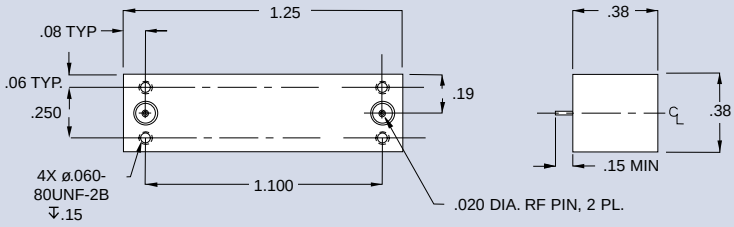

Figure E

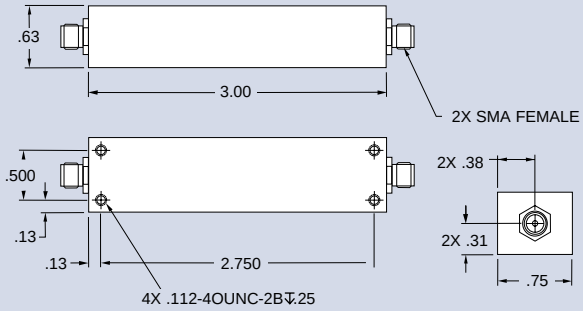

Figure C

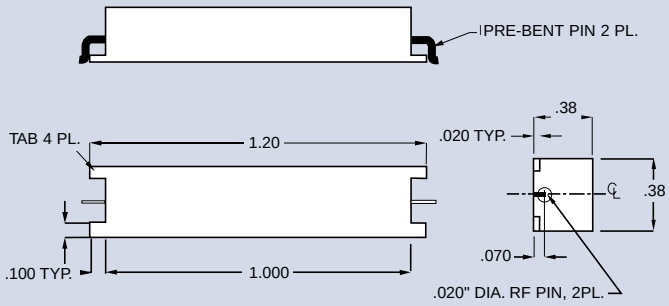

Figure F

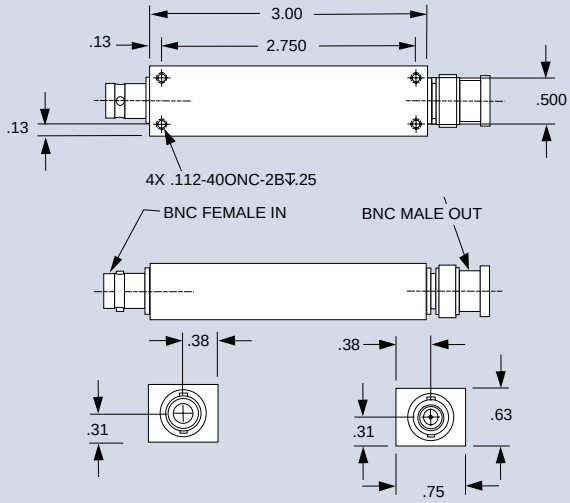

Dimensions in inches

Lumped Element Filters

Design Considerations

Transfer Functions

Numerous types of transfer functions are achievable using lumped element designs. The most efficient solution is selected for each application. By varying the capacitive and inductive coupling between sections, Spectrum Microwave can produce symmetric or asymmetric all-pole responses.

High Q Structures

Pole-placed and linear phase/group delay equalized responses are also relizable. The achievable unloaded Q's for these structures can be as high as 400. The Q for a particular design depends upon the inductor size, core material, and frequency of operation. Broad stopband performance can be achieved by suppressing parasitic resonances via careful component selection and through the use of proprietary design practices.

Power Handling

For high power applications, large air wound inductors and high voltage capacitors are used. Proprietary design techniques and careful component selection ensure minimal temperature drift, and in many cases temperature coefficients of less than 5 ppm/°C are achievable. Both miniature and standard designs are available with either coaxial connectors or axial/radial feed-thrus for direct circuit board installation. Several surface finishes, including silver, nickel, and gold are available depending upon specific customer requirements.

Multiplexing

In many instances, especially in broad passband or non-contiguous multiplexing applications, the lumped element topology can be easily integrated with other topologies to maximize performance in the smallest possible package volume.

SPECTRUM MICROWAVE • 2144 Franklin Dr. N.E. • Palm Bay, FL • Phone: 888-553-7531 • Fax: 888-553-7532
SPECTRUM MICROWAVE GmbH • Hansastrasse 6 • 91126 Schwabach, Germany • Phone: (49)-9122-795-0 • Fax: (49)-9122-795-58
www.specwave.com

Cavity Filters

• Interdigital • Combline
• Ceramic Loaded • Helical

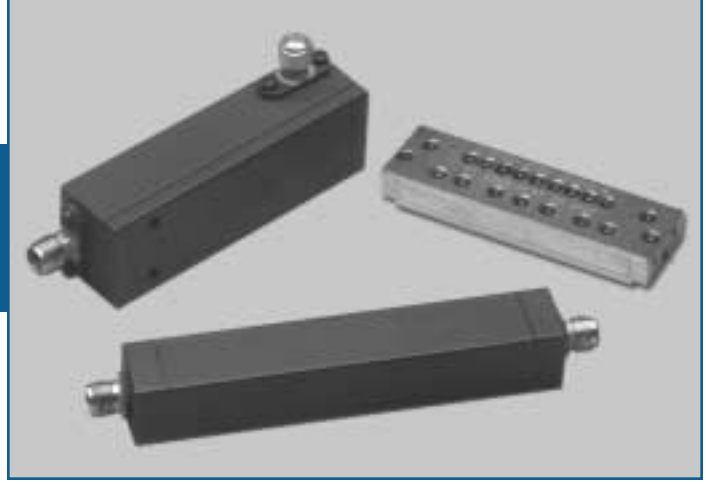

These TEM mode filters consist of inductively coupled short circuited stub resonators. Cavity filters are high Q structures for high selectivity, with very low passband insertion loss, which is important for receiver front end or high power transmit applications. In addition, the filter's steep attenuation skirts are ideal for separation of closely spaced signals. By using resonators that are less than 45 degrees in electrical length, the upper frequency limit of the stopband may be extended, yielding improved ultimate attenuation.

Features

- Low loss
- Very high selectivity
- Wide range of bandwidths - 0.5% to 70%
- High peak power
- Excellent temperature stability
- Low IMD designs available

Applications

- Avionics
- Military
- Base stations
- Test instrumentation
- Communications

Some cavity filter applications can be fulfilled with Hi-Rel packaged ceramic filters, consult factory, see page 48 for more details

Typical Performance Characteristics

Q Factor ..... up to 5000
Impedance ..... 50 Ohms standard
Temperature Range ..... -55 to 85°C
Temperature Stability ..... ±5 ppm typ
Shock ..... 10 G
Vibration ..... 20 G
Humidity 0-95%
Power Range ..... 15 W - 2 KW typ
Packaging Options .....Various options available

Filter Frequency Ranges

Bandpass ..... 60 MHz - 40 GHz
Band reject ..... 60 MHz - 20 GHz
Duplexer/Multiplexer 60 MHz - 40 GHz

Custom Part Number Examples (Typical part numbers, consult factory for additional designs)

Part Number	Topology	Passband (MHz)	Insertion Loss dB (max.)	VSWR (max.)	Attenuation (dBc @ MHz)	Size (inches) ex connectors	Comments	Reference Outlines
C1220-65-13SS-F		1200 to 1240	4.0	1.4:1	115 @1150 & 1290	1.00 x 1.50 x 4.00	Change in group delay <=12 nsec over bandwidth	
C1182.5-65-13SS-F		1162.5 to 1202.5	4.0	1.4:1	115 @1125 and 1252	1.00 x 1.50 x 4.00	Change in group delay <=12 nsec over bandwidth	
C1030-27-3SS		1025 to 1035	1.0	1.5:1	45 from DC to 930 and 1130 to 5000	.75 x 1.75 x 2.25		
C1090-27-3SS		1084 to 1096	1.0	1.5:1	45 from DC to 990 and 1190 to 4000	.75 x 1.75 x 2.25	Peak power handling is 3KW	
C1307.5-220-5NN		1215 to 1400	0.25	1.2:1	30 @ 1090 & 40@ 1030	1.00 x 2.25 x 3.75		
C3000-2070-17SS-LP		2000 to 4000	0.5	1.35:1	55 @ 10 to 1700 & 4400 to 18000	.75 x 1.00 x 5.25		
C5818-30-6XPXP		5808 to 5828	4.0	1.5:1	50 min. @ 5777 & 5858	.58 x .88 x 4.00		A
C2250-140-9SS		2200 to 2300	0.5	1.25:1	100 min. from 1750 to 1850 & 2025 to 2120	1.60 x 1.25 x 10.95	13 nsec max over passband	B
C1600-6-6SS		1597 to 1603	2.8	1.5:1	60 min. from 1591.5 & 1608.5	1.50 x 5.60 x 3.15	Differential group delay 150nsec max over passband	C
C11850-2000-8SS		10950 to 12750	2.0	1.4:1	20 @ 13110	.50 x .50 x 2.50	Change in group delay <=12nsec over passband	
C6137.5-520-10SS		5850 to 6425	1.0	1.25:1	100 @5235 & 7040	.50 x .75 x 3.50	Max group delay = 1.0nsec over any 40MHz segment	
C14250-544-7SMSM		14000 to 14500	2.0	1.5:1	80 @ 13050	.50 x .50 x 1.40		
C34300-13000-10KMK		28600 to 40000	2.0	2.0:1	55 @10000 to 24310	.50 x .50 x 1.10		
C22250-9000-13KK		18000 to 26500	1.0	1.5:1	32 @15304 to 17041	.50 x .60 x 1.56		
C19600-5200-6SS		17500 to 21700	.5	1.7:1	40 @ DC to 12GHz	.50 x .50 x 1.10		

Cavity Filters

Reference Outlines

Figure A

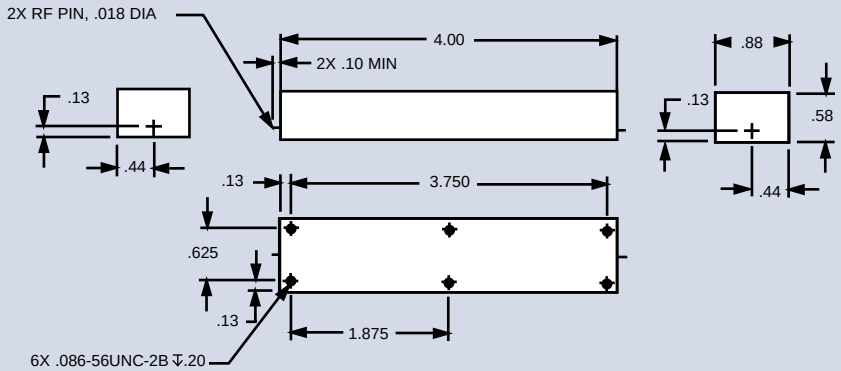

Figure B

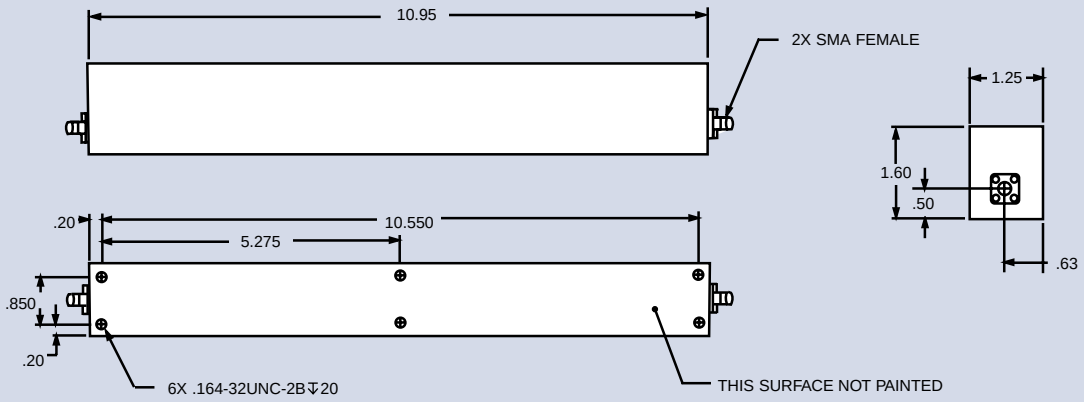

Figure C

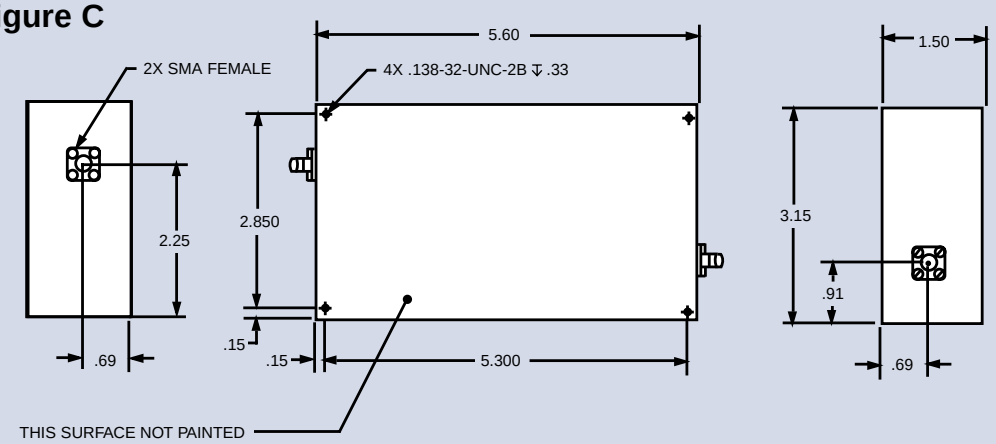

Dimensions in inches

SPECTRUM MICROWAVE • 2144 Franklin Dr. N.E. • Palm Bay, FL • Phone: 888-553-7531 • Fax: 888-553-7532
SPECTRUM MICROWAVE GmbH • Hansastrasse 6 • 91126 Schwabach, Germany • Phone: (49)-9122-795-0 • Fax: (49)-9122-795-58
www.specwave.com

Cavity Filters

Design Considerations

Spectrum Microwave has researched the suppression of intermodulation products in high power filters. Through careful process control and component selection, we have devised specialized design techniques to satisfy these requirements.

Size and Materials

Pseudo elliptic designs can be used to reduce the number of sections required to meet a specified attenuation response. This reduction in the number of sections results in a smaller filter with lower passband loss. Similar techniques can also be used to provide passband group delay equalization or increase attenuation over a specified stopband region.

To reduce weight and minimize passband loss, Spectrum Microwave cavity filters are generally machined from lightweight aluminum alloys and plated with a high purity silver. Proprietary design techniques are used to ensure minimal temperature drift. Spectrum Microwave has designed and manufactured cavity filters with temperature drifts of less than 1 ppm/°C.

Multiplexing

For systems that share a common antenna, such as Tx/Rx communications systems, multiplexers can be formed by combining these bandpass structures to a common port. Both contiguous and non-contiguous multiplexers are available. In addition, by combining two or more filters at both input and output ports, devices with two or more passbands are achievable.

Combline Structures

Combline structures are used for bandwidths between 0.2% and 70%. Depending upon the particular specifications, combline filters can provide stopbands that extend beyond 10 times the center frequency. Additionally, these structures can be made extremely compact and are generally considered to be one of the most versatile topologies for use at microwave frequencies.

Interdigital Structures

For very wide passband applications, interdigital structures are used. Interdigital filters provide a geometrically symmetric amplitude response for wideband applications, whereas combline responses become increasingly asymmetric as the percent bandwidth increases. The quarter wavelength resonators used in interdigital filters, however, result in a decrease in upper stopband performance.

High selectivity, low loss bandstop filters are realized by coupling tub resonators to a common transmission line at 90° intervals.

Waveguide Filters

Waveguide bandpass filters consist of half wavelength resonant cavities coupled by capacitive or inductive irises. These extremely high Q structures provide very low passband loss and steep attenuation skirts. Spectrum Microwave designs and manufactures waveguide filters in the frequency range 2 to 40GHz, with peak power level ratings as high as 50 KW. The TE10 mode, the dominant mode in rectangular waveguide, is utilized in most designs.

Features

- 0.1 to 20% bandwidths
- Extremely low loss
- High power handling
- High power capacity

Applications

- Avionics
- Digital radios
- Repeaters
- Point to Point
- Transmit filters
- Satellite communications

Typical Performance Characteristics

Q Factor ..... up to 20000
Temperature Range ..... -55 to 85°C
Temperature Stability ..... as low as 1 ppm
Shock ..... 10 G
Vibration ..... 20 G
Humidity 0-95%
Power Range ..... 20 W - 50 KW
Packaging Options ..... Waveguide Flanges, Connectorized

Filter Frequency Ranges

Bandpass ..... 2 GHz - 40 GHz
Lowpass ..... 2 GHz - 40 GHz
Band reject ..... 2 GHz - 40 GHz
Duplexer/Multiplexer 2 GHz - 40 GHz

Custom Part Number Examples (Typical part numbers, consult factory for additional designs)

Part Number	Topology	Passband (GHz)	Insertion Loss (dB) (max.)	VSWR (max.)	Attenuation (dBc min @ GHz)	Length (inches) ex connectors	Comment	Reference Outline
W8150-550-11FF		7.9 to 8.4	0.5	1.4:1	55 @7.2 to 7.75	12.00	Satellite communications, material = WR112	A
LW28.0G-13FF		18.0 to 26.5	1.0	1.5:1	45 @ 35 to 55	12.00	Point to point, material = WR42	
W29150-360-5FF		29.0 to 29.3	1.5	1.5:1	50 @ 28.3 to 28.6	2.23	Digital radio, material = WR28	
W5300-53-5FF		5.285 to 5.315	0.4	1.2:1	60 @ 5.2 and 5.4	0.90	Power = 250W peak, material = WR159	
W7.5G-0.66-7FF		7.25 to 7.75	0.6	1.3:1	30 @ DC to 6.6	9.65	Material = WR122	

SPECTRUM MICROWAVE • 2144 Franklin Dr. N.E. • Palm Bay, FL • Phone: 888-553-7531 • Fax: 888-553-7532
SPECTRUM MICROWAVE GmbH • Hansastrasse 6 • 91126 Schwabach, Germany • Phone: (49)-9122-795-0 • Fax: (49)-9122-795-58
www.specwave.com

Reference Outline

Figure A

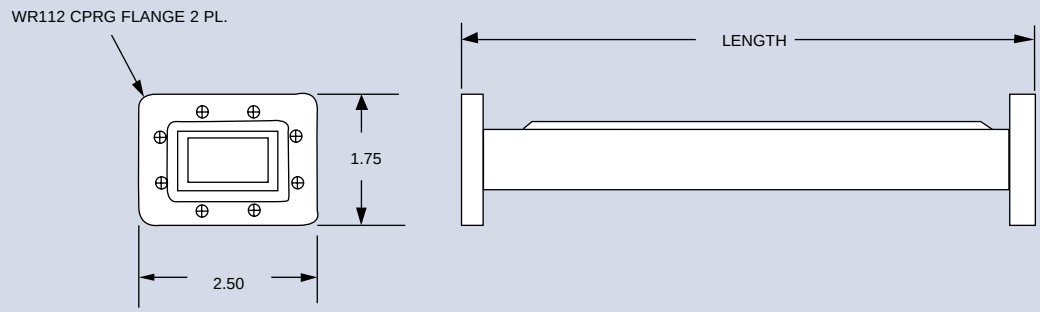

Dimensions in inches

Design Considerations

Bandpass filters can be realized with percent bandwidths ranging between 0.1 to 20 percent. For very narrowband, low loss requirements, circular waveguide can be used. The dominant mode for circular waveguide is the TE11 mode. Additionally, circular waveguide is utilized for dual mode designs.

Depending upon the bandwidth, either inductive irises or inductive posts are used to control coupling between each cavity. Pseudo elliptic designs can be used to reduce the size and insertion loss or to equalize the group delay. Waveguide multiplexers can be produced by connecting several waveguide filters to a common port. Waveguide bandstop filters can be achieved by placing several shortcircuited cavities at intervals of three-quarters wavelength along the waveguide body.

By using several adjacent high and low impedance sections, a corrugated waveguide lowpass filter can be designed. This type of filter can be designed to have a wide passband and a wide stopband for power in the TE10 mode. Suppression of higher order modes can be achieved by using a waffle iron structure. Waffle iron lowpass filters can be designed to suppress up to the 5th harmonic and beyond.

Materials

Material selection for a waveguide filter depends upon the specific requirements. Copper is generally used, but for wide temperature ranges and narrowband applications invar is used to guarantee frequency stability. Aluminum can also be used for lightweight applications. All Spectrum Microwave waveguide filters are available with either waveguide flanges or coaxial connectors. Sealed versions are available for pressurized applications.

Tubular Filters

Spectrum Microwave tubular filters provide relatively high unloaded Q's in a moderate package size. Due to their mechanical configuration, tubular filters have inherently broad stopbands with very high attenuation levels. Element and housing size determine the upper stopband frequency limits. This topology is best suited for bandpass and lowpass structures.

Features

- Low loss
- High power handling
- Low cost
- Broad stop band characteristics
- Rapid prototyping

Applications

- Instrumentation
- Medical
- High power harmonic rejection

Typical Performance Characteristics

Frequency Range ..... 30 MHz to 20 GHz
Q Factor ..... up to 2000
Temperature Range ..... -55 to 85°C
Temperature Stability ..... as low as 1 ppm
Shock ..... 30 G
Vibration ..... 10 G
Humidity 0-95%
Power Range ..... 20 W - 50 KW typ
Packaging Options ..... Connectorized, PC mount

Filter Frequency Ranges

Bandpass ..... 30 MHz - 5 GHz
Lowpass ..... 30 MHz - 20 GHz

Custom Part Number Examples (Typical part numbers, consult factory for additional designs)

Part Number	Topology	Passband (MHz)	Insertion Loss (dB) (max.)	VSWR (max.)	Attenuation (dBc min. @ MHz)	Size (in inches) ex connectors	Comment
BC1200-600-6SS	⊓	950 to 1450	0.5	1.5:1	30 @ 600 and 1800	0.50 dia X 4.50	
LE410-21NN-HP	⊓	225 to 400	0.5	1.25:1	44 @ 450 and 1200	1.13 dia X 18.35	600 watts power at CS
LA4.5G-9SMS	⊓	DC to 4000	0.5	1.4:1	25 @ 5600MHz, 60dBc @ 7200	0.25 dia X 3.07	Lowpass
BC1345-130-8SSM	⊓	1290 to 1400	4.0	1.5:1	225 @ 1226MHz, 45dBc @ 1464	0.50 dia X 5.25	
BC1030-30-4SS	⊓	1010	3.0	1.5:1	50 @ 955MHz and 1105	0.50 dia X 4.00	3dB BW = 30 MHz, IFF
BE151-30-8BB	⊓	151	2.5	1.5:1		1.125 dia X 12.25	3dB BW = 30 MHz, NMR
BA2250-200-6SS	⊓	2200 TO 2300	1.7	1.3:1	48 @ 2000 and 2500	0.25 dia X 3.65	Passband phase linearity ±3 degrees
LC139-7BBM	⊓	DC TO 125	1.4	1.5:1		0.50 dia X 6.00	Aviation radio
BD256-36-8SS	⊓	242-270	1.75	1.5:1	60 @ 290	0.75 dia X 7.00	Military Communications
BE470-18-8BBM	⊓	470	2.5	1.5:1	80 @ 440 and 500	1.125 dia X 12.25	3dB BW = 18MHz, NMR

Standard Coaxial Lowpass Filters from DC - 8 GHz

Passband (MHz)	Passband I.L. (Max dB)	Passband VSWR (Max)	25 dB Min Stopband (GHz)	60 dB Min Stopband (GHz)	Part # (Female/Male SMA's)	Part # (Female/Male Type N's)
DC-500	0.5	1.4:1	0.70	0.90	LC550-11SSM	LC550-11NNM
DC-750	0.5	1.4:1	1.05	1.35	LC780-11SSM	LC780-11NNM
DC-1000	0.5	1.4:1	1.40	1.80	LC1.1G-11SSM	LC1100-11NNM
DC-1300	0.5	1.4:1	1.82	2.34	LC1400-11SSM	LC1400-11NNM
DC-1500	0.5	1.4:1	2.10	2.70	LC1700-11SSM	LC1700-11NNM
DC-2000	0.5	1.4:1	2.80	3.60	LC2.2G-11SSM	LC2.2G-11NNM
DC-3000	0.5	1.4:1	4.20	5.40	LC3.2G-11SSM	LC3.2G-11NNM
DC-4000	0.5	1.4:1	5.60	7.20	LA4.5G-9SSM	LA4.5G-9NNM
DC-5000	0.5	1.4:1	7.00	9.00	LA5.5G-11SSM	LA5.5G-11NNM
DC-6000	0.5	1.4:1	8.40	10.80	LA6.6G-9SSM	LA6.6G-9NNM
DC-7000	0.5	1.4:1	9.80	12.60	LA7.7G-11SSM	LC7.7G-11NNM
DC-8000	0.5	1.4:1	11.20	14.40	LA8.8G-11SSM	LA8.8G-11NNM

www.specwave.com
SPECTRUM MICROWAVE • 2144 Franklin Dr. N.E. • Palm Bay, FL • Phone: 888-553-7531 • Fax: 888-553-7532
SPECTRUM MICROWAVE GmbH • Hansastrasse 6 • 91126 Schwabach, Germany • Phone: (49)-9122-795-0 • Fax: (49)-9122-795-58

Tubular Filters

Reference Outline (Standard tubular filter housing on page 61)

1/4" diameter

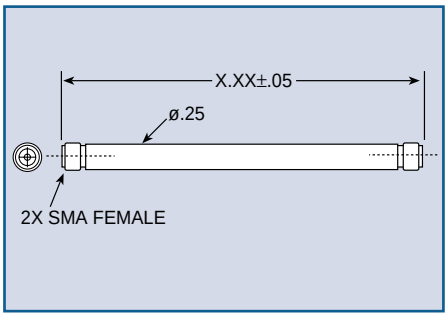

1/2" diameter

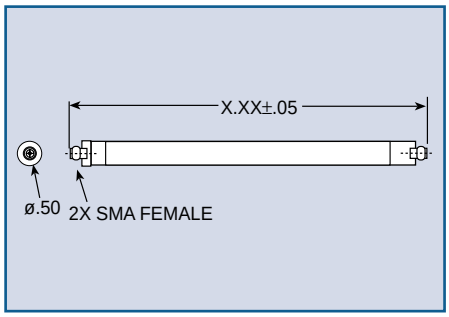

1 1/8" diameter

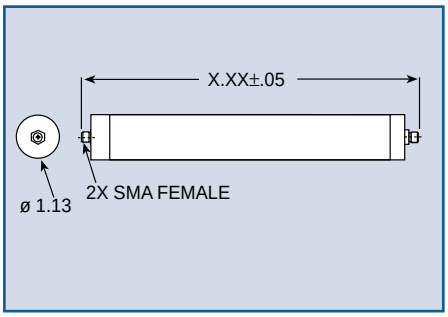

Design Considerations

Tubular bandpass filters can be designed with percent bandwidths ranging from 1 to 70 percent. They consist of a series of semi-lumped lowpass sections, capacitively coupled, using dielectric spacers.

Tubular lowpass filters consist of high and low impedance, semi-lumped elements supported by a dielectric tape in a cylindrical housing. These lowpass filters are ideal for harmonic suppressions and rejection of out of band noise. They can be designed to handle power levels in excess of 1000 watts.

Connectors

All of Spectrum Microwave's tubular filters are available with various types of connectors or PC pins. They can be installed in place of an existing cable run or can be bulkhead or fuse clip mounted.

While this topology has been in existence for almost four decades, there are certain frequency ranges and applications where the tubular filter is the best alternative in terms of electrical performance and size.

Additionally, the standardized component structure allows for quick turn-around times with small quantity deliveries.

Suspended Substrate Filters

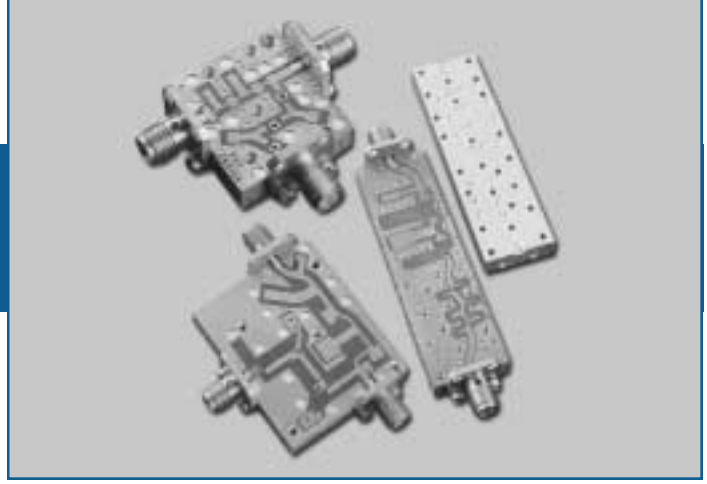

Suspended substrate stripline is similar to standard stripline circuits with the exception that most of the dielectric surrounding the circuit is removed to increase the structure's unloaded Q. This increase is unloaded Q results in lower passband loss than conventional stripline filters. In addition, the lack of dielectric surrounding the circuit makes the filter less sensitive to ambient temperature variations.

Features

- Multi-octave bandwidths
- High selectivity
- Low profile

Applications

- ECM
- ECCM
- ELINT
- Ultra broadband receivers

Typical Performance Characteristics

Temperature Range ..... -55 to 85°C
Temperature Stability ..... ±5 ppm typ
Impedance ..... 50 ohms standard
Shock ..... 10 G
Vibration ..... 20 G
Humidity 0-95%
Power Range ..... 20 W - 100 W
Packaging Options ..... Connectorized, Drop-in

Filter Frequency Ranges

Bandpass ..... 2 GHz - 20 GHz
Highpass ..... 2 GHz - 26.5 GHz
Lowpass ..... 300 MHz - 40 GHz
Band reject ..... 2 GHz - 26.5 GHz
Duplexer/Multiplexer 2 GHz - 20 GHz

Custom Part Number Examples (Typical part numbers, consult factory for additional designs)

Part Number	Topology	Passband (GHz)	Insertion Loss (dB max)	VSWR (max)	Attenuation (dBc @ GHz)	Size (inches) ex connectors	Comment	Reference Outlines
DP12.0G-SS		Ch1: DC-11.4 CH2: 12.6-18	Ch1&2: 1:0	Ch1&2: 1:0	50 @DC to 10.2	0.50 x 1.00 x 0.90	duplexer, Crossover = 4.5dB IL @ 12GHz	A
DP4G-17SS		Ch1: DC-3.8 Ch2: 4.2-4.8	Ch1&2: 0.75	Ch1&2: 1.5:1	55 @ DC to 3.4, 4.6-8	0.50 x 1.31 x 1.60	duplexer, Crossover = 4.5dB @ 4GHz	
LP18000-SS		DC to 18	1.0	1.2:1	60 @ 19.5 to 26	.50 x .75 x .50	Lowpass	B

SPECTRUM MICROWAVE • 2144 Franklin Dr. N.E. • Palm Bay, FL • Phone: 888-553-7531 • Fax: 888-553-7532
SPECTRUM MICROWAVE GmbH • Hansastrasse 6 • 91126 Schwabach, Germany • Phone: (49)-9122-795-0 • Fax: (49)-9122-795-58
www.specwave.com

Suspended Substrate Filters

Reference Outlines

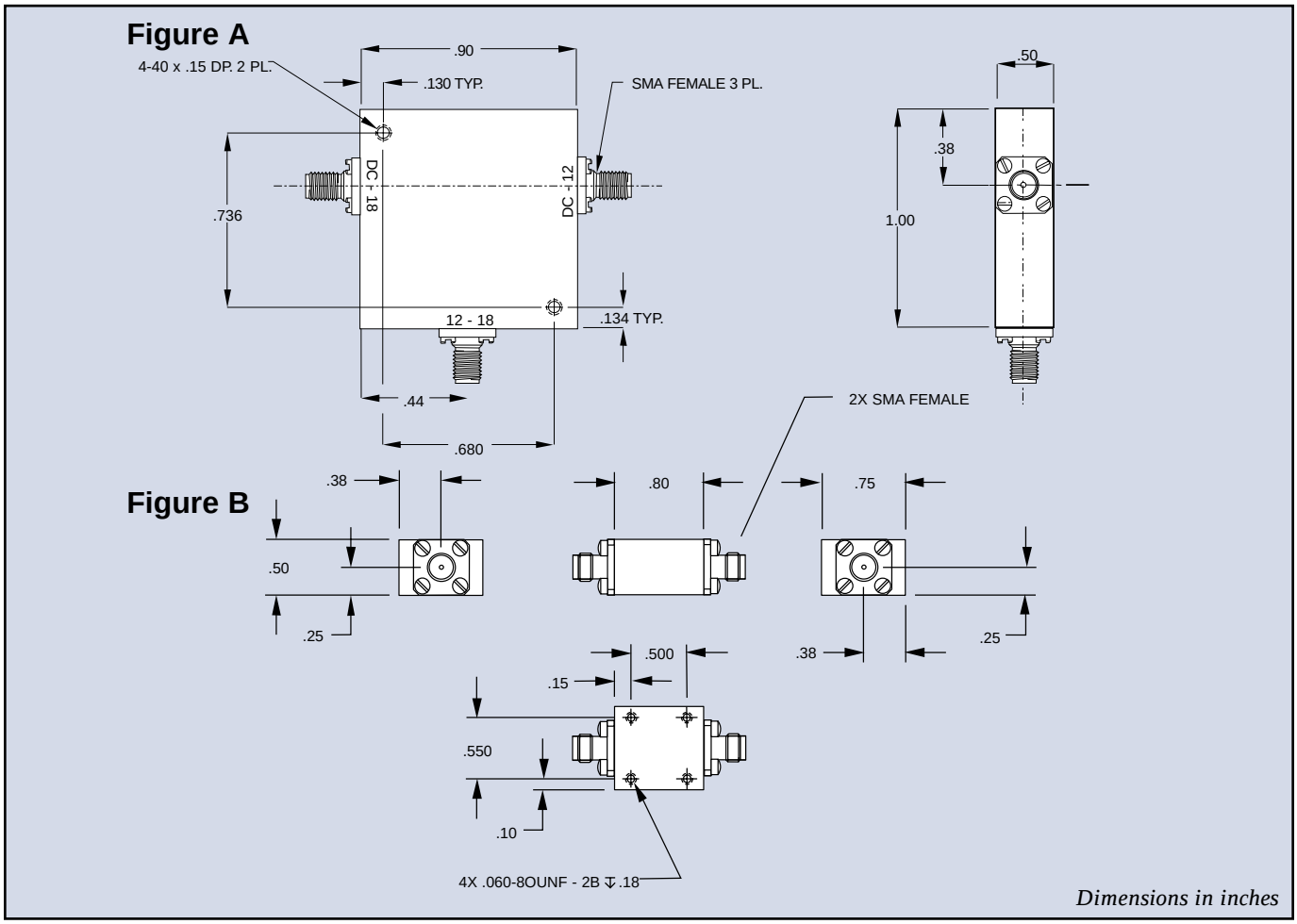

Design Considerations

A basic suspended substrate stripline filter consists of an etched copper clad dielectric board secured in air between silver plated, machined housings. To ensure proper support and suppress RF leakage, internal walls are also used to secure the board at various intervals within the housing.

Suspended substrate filters can be supplied with either coaxial connectors or axial/radial feed-thrus for installation onto a circuit board or for drop-in MIC applications.

The photo-etched circuitry ensures consistency and repeatability from unit to unit. This topology is suitable for lowpass, highpass, bandpass, bandstop and multiplexing applications in both broadband and narrowband filters. Suspended substrate is currently used in many active EW systems involved ELINT, ECM, and ECCM.

The broad range of achievable impedance values make suspended substrate particularly suitable for highpass and lowpass filters. Broadband bandpass filters and multiplexers can be constructed by cascading highpass and lowpass filters together. The simple, repeatable printed circuit design and small number of parts result in an easily producible unit well suited for high volume manufacturing.

The Cauer/pole-placed transfer functions used in many of the suspended substrate designs result in highly selective, low insertion loss devices. In addition, the compact structure and the flexibility of the printed circuit technology make suspended substrate designs particularly well suited for integrated assemblies.

Couplers, power dividers, and amplitude equalizers can be readily realized in suspended substrate. The printed circuit board configuration naturally lends itself to integration with other topologies, as well as to the direct integration of active components.

Bandpass Filters
Ceramic Resonator Type

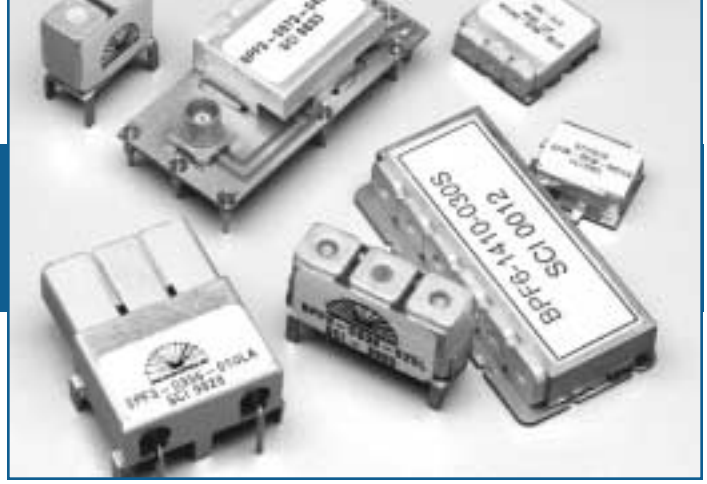

Features

- Temperature stable (±5 ppm/°C)
- Temperature range (-30°C to +85°C)
- High Q factor (400 to 2000)
- Low insertion loss
- Wide frequency range (400 MHz to 6 GHz)
- High frequency and mechanical stability
- Notch filters available
- Surface mount and thru-hole mount
- Available in 2 to 10 poles
- Available with 2 mm to 6 mm resonators
- 50 Ohm standard, 75 Ohm impedance available
- Custom designs available
- Available in tape and reel packaging (Specs vary based on the size of the part). Please consult the factory for specifications.
- Sealed packages available
- Compliant to MIL Specs
- Compliant to RoHS Specs

Commercial Applications

- Cellular base station transceivers
- Satellite transceivers
- GPS and car navigation equipment
- Land mobile radios
- CATV
- Modems
- Wireless LANs

Recommended Temperature Profile for Soldering

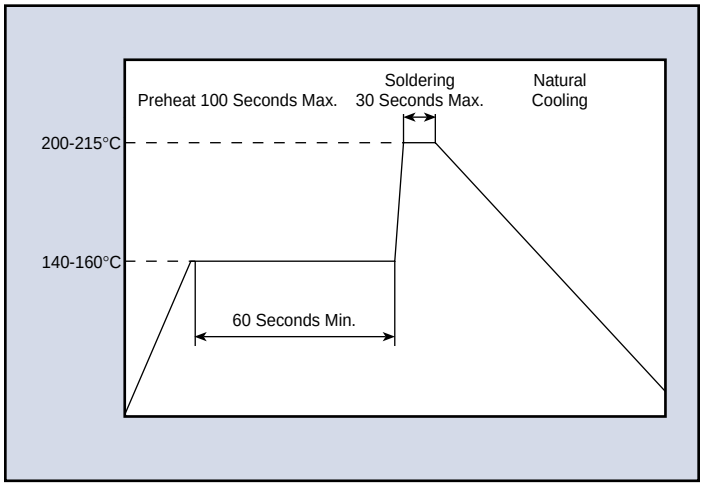

Military Applications

- GPS
- IFF
- RX & TX Communications
- Data Links
- Land mobile radios

Part Numbering System

Example: **BPC3-0881-025SC**

BP	C	3	-	0881	-	025	S	C
Class	**Resonator Cross Section**	**Number of Poles**		**Center Frequency (MHz)**		**Bandwidth (MHz)**	**Mounting Type**	**Series**
Bandpass **F**ilters	**B** = 2 mm **C** = 3 mm **D** = 4 mm **F** = 6 mm	2 to 7 standard		Use 4 digits		Use 3 digits	**L** = Leaded **S** = Surface Mount	Assigned by factory

SPECTRUM MICROWAVE • 2144 Franklin Dr. N.E. • Palm Bay, FL • Phone: 888-553-7531 • Fax: 888-553-7532
SPECTRUM MICROWAVE GmbH • Hansastrasse 6 • 91126 Schwabach, Germany • Phone: (49)-9122-795-0 • Fax: (49)-9122-795-58
www.specwave.com

Bandpass Filters
Ceramic Resonator Type

Custom Part Number Examples (Typical part numbers, consult factory for additional designs)

Application	SCI Part Number	Center Frequency (MHz)	3dB Bandwidth (MHz)	Number of Poles	Insertion Loss (dB)	Passband Ripple (dB)	VSWR	Attenuation (dBc @ MHz)	Reference Outlines
CATV *	BPF3-0445-001LA	445.25	±3.75	3	4.5	0.25	2:1	18 @ 439.45, 451.05	G
CATV *	BPC3-0445-001SB	445.25	±3.75	3	8.1	0.25	2:1	15 @ 4.39.25, 451.25	E
CATV *	BPF3-0547-001LA	547.25	±3.75	3	5.5	0.25	2:1	18 @ 541.45, 553.05	G
DSF	BPD5-0767-072SA	767.0	±36.0	5	4.0	2.0	2:1	28 @ 677, 857	F
E-Amps	BPC3-0836-025SC	836.5	±12.5	3	2.6	1.0	2:1	12 @ 804, 869	D
DSF	BPD4-0859-038SA	859.0	±19.5	4	3.0	2.0	2:1	20 @ 789, 929	F
E-Amps	BPC3-0881-025SC	881.5	±12.5	3	2.6	1.0	2:1	12 @ 849, 914	D
DSF	BPD3-0883-0255A	883.0	±12.5	3	2.6	1.0	2:1	25 @ 793, 973	F
DSF	BPD3-0888-033SA	888.5	±16.5	3	3.0	1.0	2:1	25 @ 798.5, 978.5	F
GSM	BPC3-0902-025SC	902.5	±12.5	3	2.6	1.0	2:1	12 @ 870, 93.05	D
ISM	BPC2-0915-026SC	915.0	±13.0	2	2.2	1.0	2:1	23 @ 837.15 18 @ 992.5	C
GSM	BPC3-0947-025SC	947.5	±12.5	3	2.6	1.0	2:1	12 @ 915, 980	D
GPS	BPC2-1575-002SC	1575.42	±1.0	2	1.2	0.3	2:1	16 @ 1435.42 14 @ 1715.42	C
PCS	BPC3-1880-060SC	1880.0	±30.0	3	2.2	1.0	2:1	15 @ 1780, 1980	D
PCS	BPC4-1960-060SC	1960.0	±30.0	4	2.5	0.7	1.5:1	42 @ 1830 20 @ 2060	B
ISM	BPC4-2442-084SB	2442.0	±42.0	4	2.5	1.0	1.7:1	4 @ 2042, 2842	B

Notes: * All CATV parts are 75 Ohm standard.
Consult the factory for custom filter designs.

Bandpass Filters
Ceramic Resonator Type

Reference Outlines

Figure A

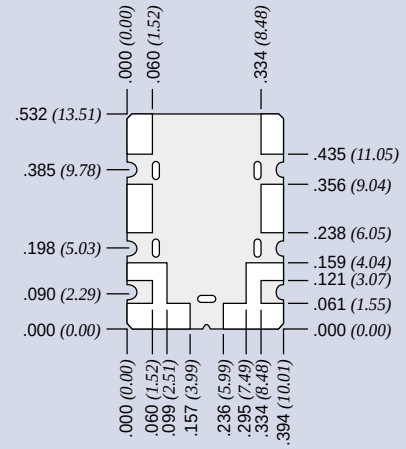

Figure B

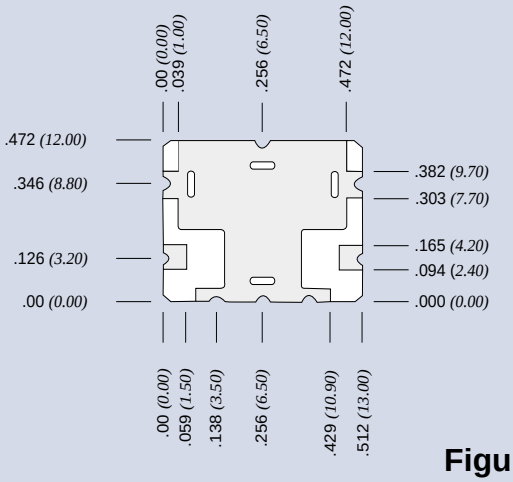

Figure C

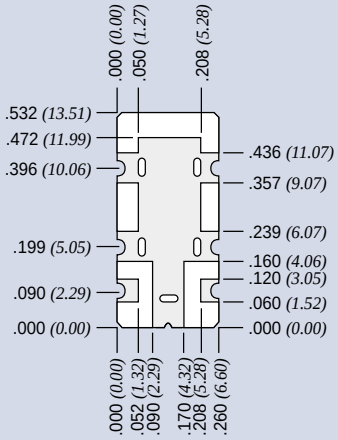

Figure D

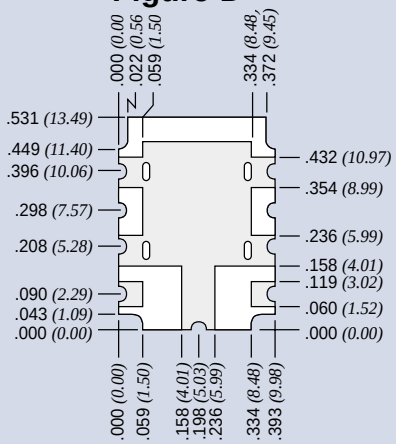

Figure E

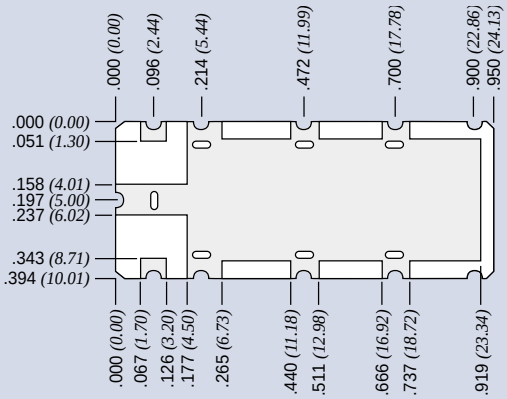

Figure F

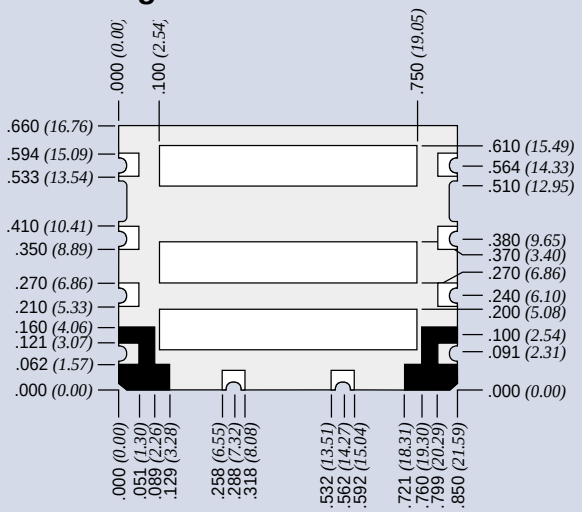

Figure G

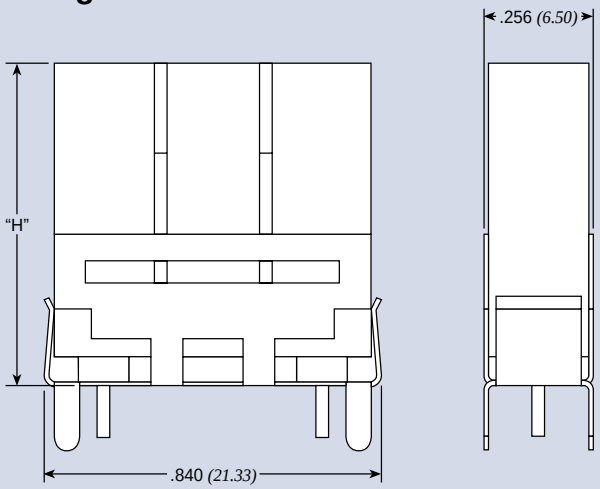

Note: See sales drawing for detailed specifications on each part.

Dimensions in inches ±0.012 *(mm ±0.3)*

SPECTRUM MICROWAVE • 2144 Franklin Dr. N.E. • Palm Bay, FL • Phone: 888-553-7531 • Fax: 888-553-7532
SPECTRUM MICROWAVE GmbH • Hansastrasse 6 • 91126 Schwabach, Germany • Phone: (49)-9122-795-0 • Fax: (49)-9122-795-58
www.specwave.com

Bandpass Filters Monoblock Type

Spectrum Microwave monoblock filters provide an economical means of satisfying many bandpass applications. We have a wide range of standards to meet your specifications. Monoblock filters are an excellent substitute for ceramic resonator type filters where cost and size are critical requirements. Monoblocks often replace SAW filters for those applications that require improved performance. Monoblocks are an ideal solution for mid to high volume order requirements.

Features

- Low profile
- Low cost
- Surface mount
- Available in 2 to 5 poles
- Low insertion loss
- Available in tape and reel packaging (Specifications vary based on the size of the part, please consult factory).
- Compliant to RoHS Specs

Applications

- Military personal communications (hand held radios, GPS equipment)
- GPS and car navigation equipment
- Cellular base station transceivers
- Satellite transceivers

Recommended Temperature Profile for Soldering

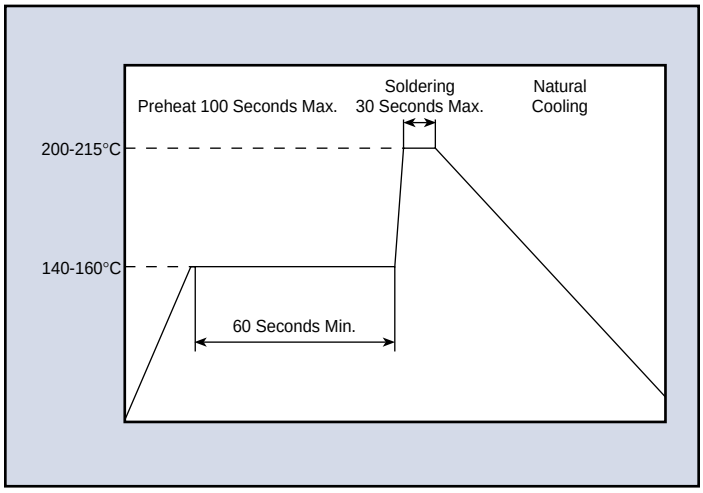

Typical Performance Characteristics

Temperature Range . . . . . -30 to 85°C

Frequency Range . . . . . 300 MHz to 5.8 GHz

Temperature Stability . . . . . ±5 ppm

Q Factor . . . . . 100 to 1,200

Impedance . . . . . 50 Ohm standard

Part Numbering System

Example: **MBC3-0881-025SA**

MB	C	3	-	0881	-	025	S	A
Class	**Height**	**Number of Poles**		**Center Frequency (MHz)**		**Bandwidth (MHz)**	**Mounting Type**	**Series**
MB = Monoblock Filters	**B** = 2 mm **C** = 3 mm **D** = 4 mm	2 to 5 standard (For additional poles consult factory)		Use 4 digits		Use 3 digits	**S** = Surface Mount	Assigned by factory

Bandpass Filters Monoblock Type

Custom Part Number Examples (Typical part numbers, consult factory for additional designs)

Part Number	Application	Center Frequency (MHz)	3 dB Band-width (MHz)	# of Poles	Insertion Loss (dB)	Return Loss (dB)	Attenuation (dB@MHz)	L (mm)	W (mm)	H (mm)	Reference Outlines
MBD4-0836-025SA	CDMA	836	25	4	2.1	12	38 @ 686, 34 @ 804	8.90	6.95	3.83	C
MBF4-0850-042SA	TDMA	850	44	4	3	10	40 @ 700	12.12	14.65	5.89	C
MBF4-0881-025SA	AMPS	891.5	25	4	1.1	12	40 @ 729-754	14.61	12.12	5.89	I
MBD2-0915-013SA	GSM	915	26	2	2	10	30 @ 710	8.79	7.89	4.50	A
MBJ5-1030-010SA	TCAS	1030	10	5	2.5	10	18 @ 1000 35 @ 1100	13.72	53.85	9.20	E
MBH4-1030-006SA	TCAS	1030	6	4	1.7	12	15 @ 1005 18 @ 1055	10.74	33.58	7.85	H
MBK1-1033-001SA	TCAS	1033	1	1	1.4	16	3 @ 1027, 1039	11.57	11.57	10.87	D
MBL3-1034-003SA	TCAS	1034	3	3	1	15	7 @ 1013, 7 @ 1034 +/-21	11.15	81.66	20.86	F
MBJ3-1090-006SA	TCAS	1090	6	3	1	13	40 @ 970	41.60	10.21	12.89	G
MBH4-1090-006SA	TCAS	1090	6	4	2	12	20 @ 1060, 1120 55 @ 1120, 1210	10.11	33.58	7.85	C
MBH4-1090-006SB	TCAS	1090	6	4	2.8	12	30 @ 1065, 1115	10.11	33.58	7.85	C
MBK1-1095-001SA	TCAS	1095	1	1	1.4	16	18 @ 1000; 35 @ 1100	11.57	11.57	10.11	D
MBE2-1227-020SB	GPS-L2	1227	20	3	1.5	10	19 @ 1367, 31 @ 1087	10.99	11.75	4.50	B
MBE2-1227-020SA	GPS-L2	1227	20	2	1.5	10	7 @ 1192, 1262	10.92	7.89	4.50	A
MBE3-1542-034SA	Inmarsat	1542	34	3	2.2	10	14 @ 1475; 32 @ 1650	8.75	11.75	4.50	B
MBH4-1542-018SA	Inmarsat	1542	18	4	1.7	12	25 @ 1460, 1626; 40 @ 1710	6.68	33.58	7.85	C
MBG4-1555-060SA	Inmarsat	1555	60	4	1.5	12	25 @1460; 55 @1210; 20 @1626; 40 @1710	6.68	33.58	7.85	C
MBE2-1575-020SA	GPS-L1	1575	20	3	1.8	10	7 @ 1575 +/-35; 7 @ 1540, 1610	7.89	11.75	4.50	B
MBB2-1575-004SA	GPS-L1	1575	4	2	1.5	11	50 @849; 45 @1850; 15 @1710; 42 @2400	4.10	4.00	2.00	A
MBB2-1575-004SB	GPS-L1	1575	4	2	0.65	16	40 @ 900	5.08	3.90	1.90	A
MBH4-1575-002SA	GPS-L1	1575	2	4	1	15	17 @ 1525, 1625	7.06	33.58	7.85	C
MBE2-1575-011SA	GPS-L1	1575	11	2	1.5	15	7 @ 1505, 20 @ 1625	7.83	9.15	4.45	A
MBH4-1643-017SA	Inmarsat	1643	35	4	1.5	12	30 @ 1545	33.58	6.63	7.85	C
MBE3-1643-034SA	Inmarsat	1643	34	3	2.2	10	30 @ 1576; 24 @ 1751	7.29	11.75	4.50	B
MBC3-1960-060SA	PCS	1960	60	3	1.9	11	15 @ 1742; 26 @ 2274	6.47	7.89	2.72	B
MBD3-1950-060SA	WCDMA Tx	1950	60	4	1	17	38 @ 1840, 27 @ 2060	6.95	5.41	3.83	C
MBF4-1960-060SA	PCS	1960	60	4	1.6	10.5	30 @ 1780-1840, 30 @ 2080-2140	14.61	5.08	5.89	I
MBD4-2140-060SA	WCDMA Rx	2140	60	4	1.3	14	56 @ 1980, 35 @ 2300	6.95	5.41	3.83	C
MBD4-2140-090SA	WCDMA	2140	90	4	1.3	13	47 @ 1833-1993, 10 @ 1920-1980	6.95	5.08	3.83	A

Note: Consult the factory for custom filter designs.

Reference Outlines

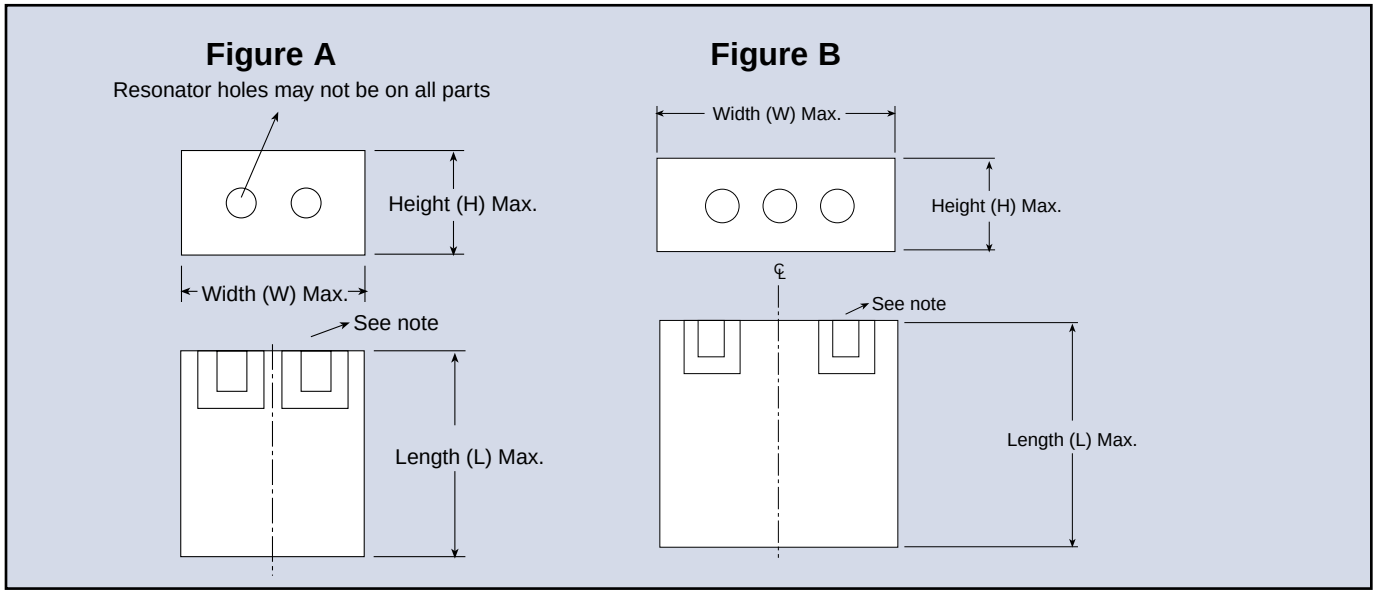

SPECTRUM MICROWAVE • 2144 Franklin Dr. N.E. • Palm Bay, FL • Phone: 888-553-7531 • Fax: 888-553-7532
SPECTRUM MICROWAVE GmbH • Hansastrasse 6 • 91126 Schwabach, Germany • Phone: (49)-9122-795-0 • Fax: (49)-9122-795-58
www.specwave.com

Bandpass Filters
Monoblock Type

Reference Outlines

Figure C

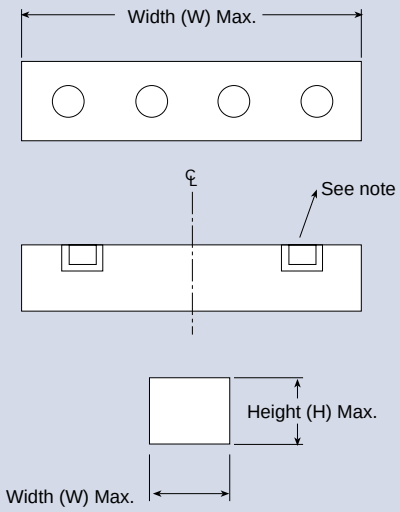

Figure D

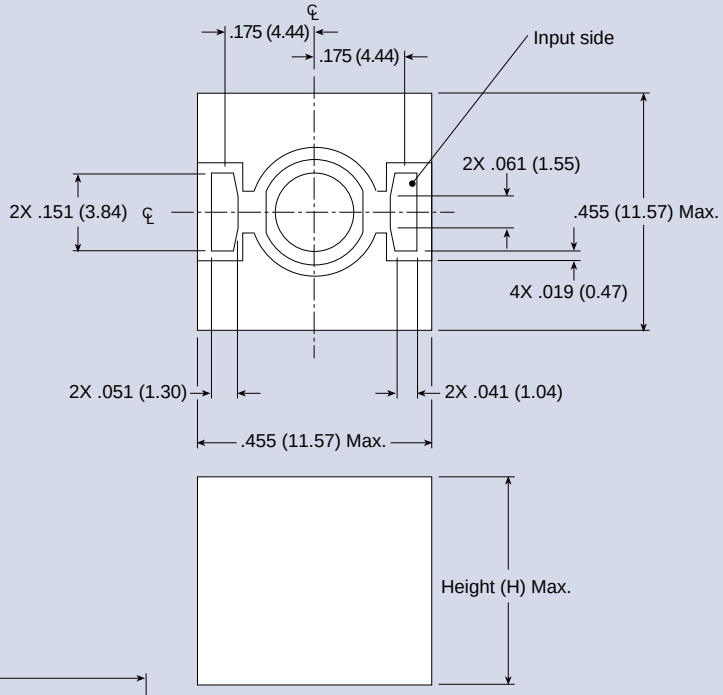

Figure E

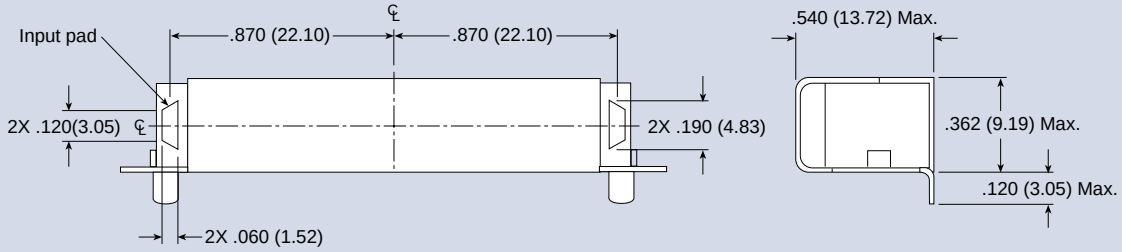

Figure F

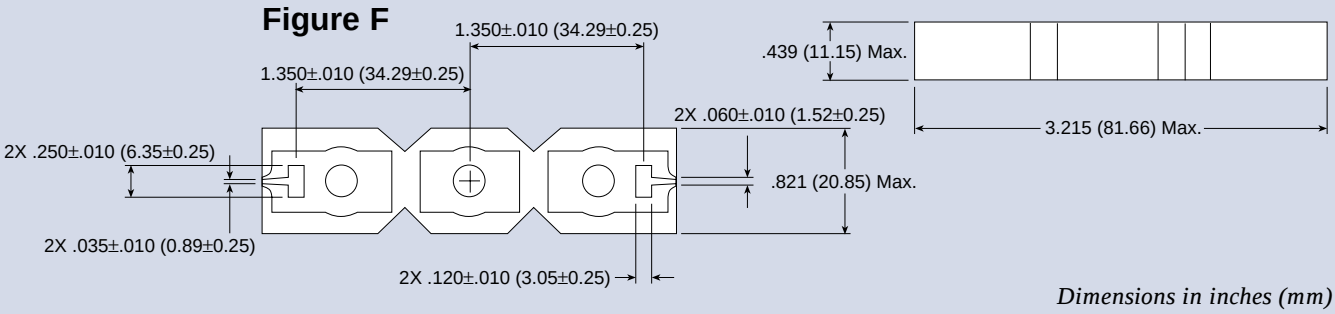

Dimensions in inches (mm)

Bandpass Filters
Monoblock Type

Reference Outlines

Figure G

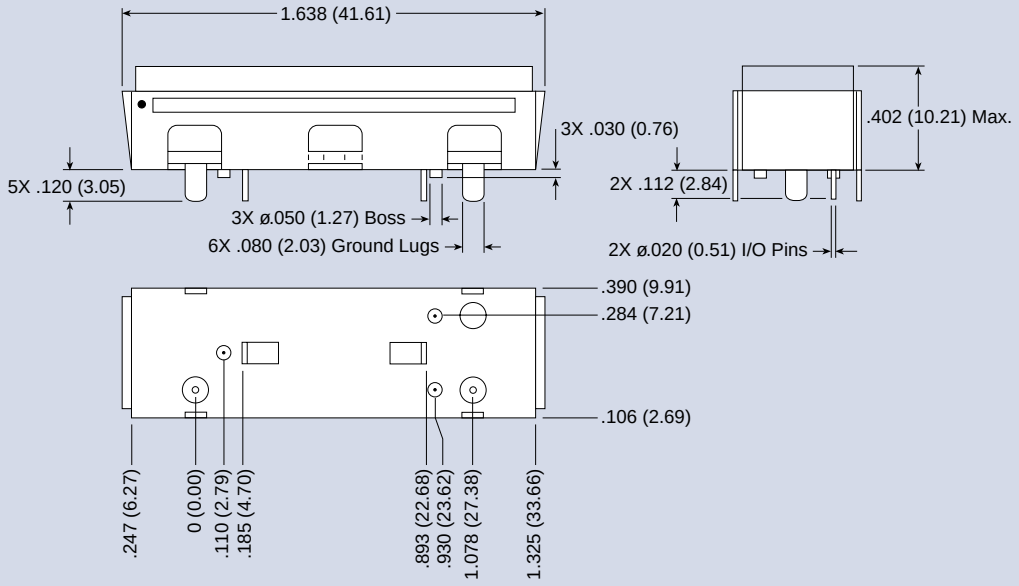

Figure H

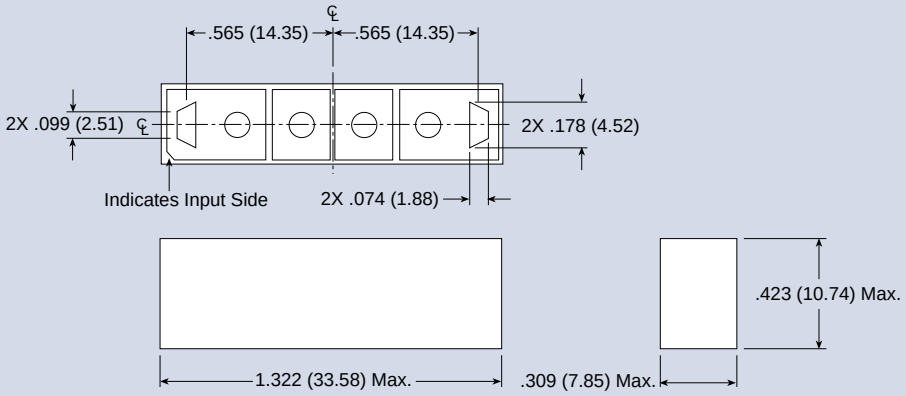

Figure I

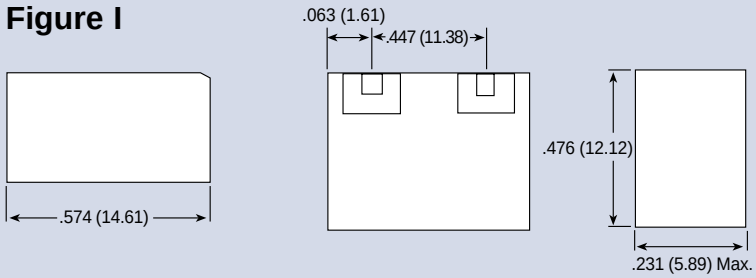

Dimensions in inches (mm)

SPECTRUM MICROWAVE • 2144 Franklin Dr. N.E. • Palm Bay, FL • Phone: 888-553-7531 • Fax: 888-553-7532
SPECTRUM MICROWAVE GmbH • Hansastrasse 6 • 91126 Schwabach, Germany • Phone: (49)-9122-795-0 • Fax: (49)-9122-795-58
www.specwave.com

Duplexers
Ceramic Resonator Type

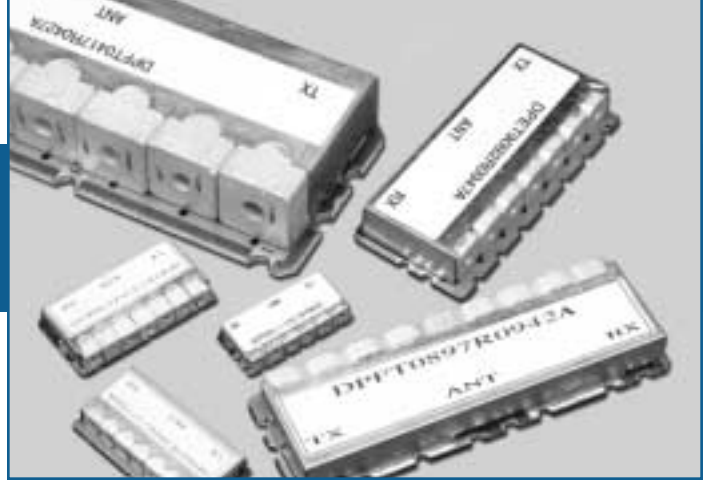

Features

- Temperature stable (±5 ppm/°C)
- Temperature range (-30°C to +85°C)
- High Q factor
- Wide standard frequency range 400 MHz to 6 GHz
- Custom designs available
- Surface mount
- Available in 2 to 10 poles
- 50 Ohm standard, 75 Ohm impedance available
- Excellent isolation between transmit and receive frequencies
- Available with different size resonators
- Available in tape and reel packaging (Specs vary based on the size of the part). Please consult the factory for specifications.
- Compliant to RoHS Specs

Applications

- Cellular base station transceivers
- Satellite transceivers
- GPS and car navigation equipment
- Land mobile radios
- CATV
- Modems
- Wireless LANs

Recommended Temperature Profile for Soldering

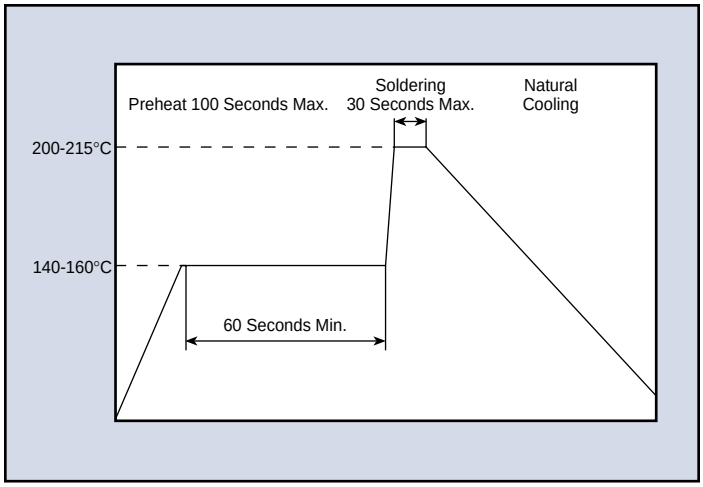

Part Numbering System

Example: **DPC7T0836R0881A**

DP	C	7	T0836	R0881	A
Class	**Resonator Cross Section**	**Number of Poles**	**Transmit Center Frequency (MHz)**	**Receive Center Frequency (MHz)**	**Series**
Duplexer **F**ilter	**B** = 2 mm **C** = 3 mm **D** = 4 mm **F** = 6 mm		Use 4 digits	Use 4 digits	Assigned by factory

Duplexers
Ceramic Resonator Type

Custom Part Number Examples (Typical part numbers, consult factory for additional designs)

Application	SCI Part Number		Center Frequency (MHz)	3 dB Bandwidth (MHz)	Number of Poles	Insertion Loss (dB)	Ripple (dB)	VSWR	Attenuation (dB @ MHz)	Reference Outlines
E-Amps	DPC7T0836R0881A	Tx	836.5	±12.5	3	2.6	1.9	1.7:1	RX: 40 @ 849, 824	A
		Rx	881.5	±12.5	4	3.7	1.3	1.8:1	TX: 50 @ 894, 869	
GSM	DPC6T0902R0947A	Tx	902.5	±12.5	3	2.4	1.2	1.7:1	RX: 32 @ 915, 890	B
		Rx	947.5	±12.5	3	3.2	1.3	1.8:1	TX: 30 @ 960, 935	
PCS	DPC7T1880R1960A	Tx	1880.0	±30.0	3	2.6	1.7	1.8:1	RX: 25 @ 1910, 1850	C
		Rx	1960.0	±30.0	3	3.5	1.8	1.8:1	TX: 22 @ 1990, 1930	

Note: Consult the factory for custom duplexer designs.

Reference Outlines

Figure A

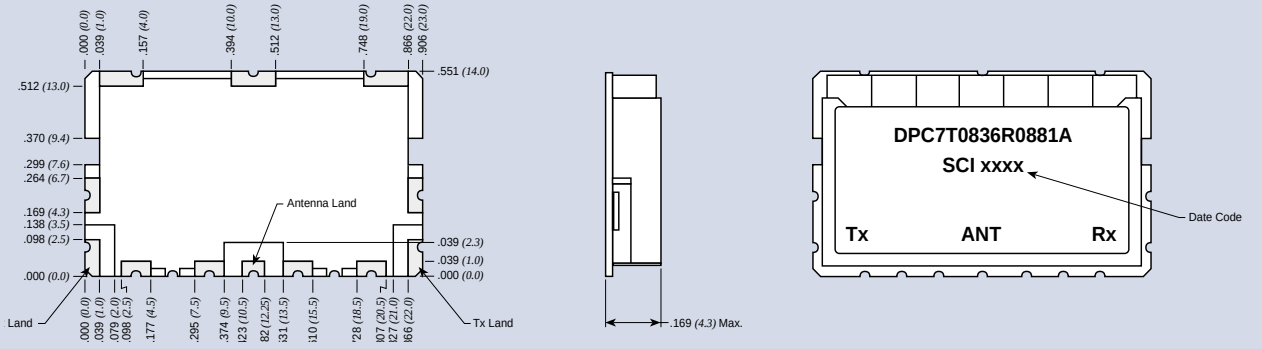

Figure B

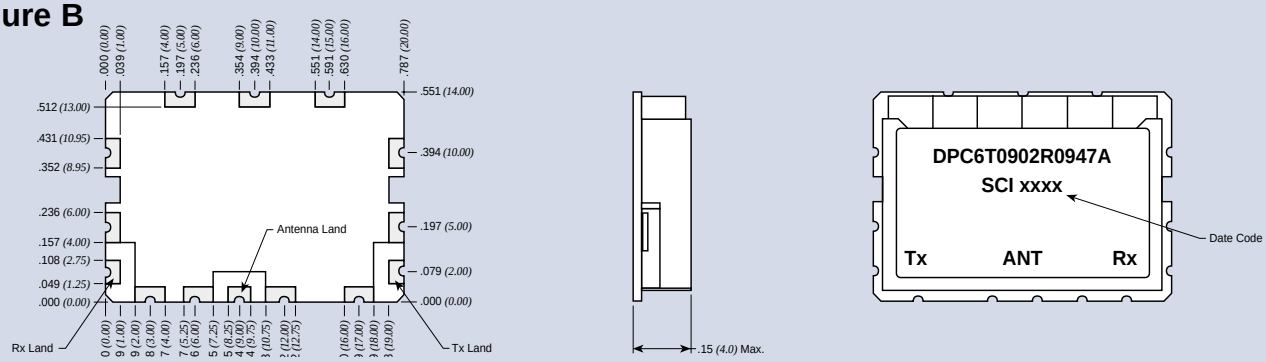

Figure C

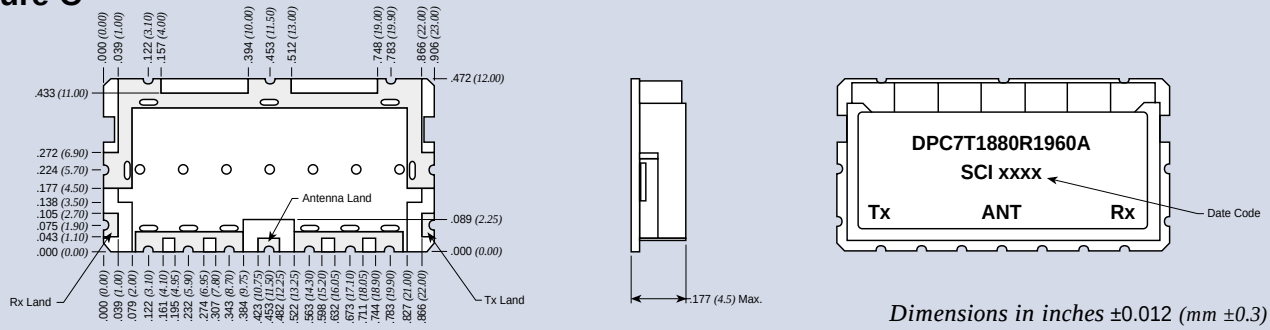

Dimensions in inches ±0.012 *(mm ±0.3)*

SPECTRUM MICROWAVE • 2144 Franklin Dr. N.E. • Palm Bay, FL • Phone: 888-553-7531 • Fax: 888-553-7532
SPECTRUM MICROWAVE GmbH • Hansastrasse 6 • 91126 Schwabach, Germany • Phone: (49)-9122-795-0 • Fax: (49)-9122-795-58
www.specwave.com

Duplexer Monoblock Type

Spectrum Microwave monoblock filters provide an economical means of satisfying many applications. We have a wide range of standards to meet your specifications. Monoblock filters are an excellent substitute for ceramic resonator type filters where cost and size are critical requirements.

Features

- Low insertion loss
- Low cost
- Surface mount
- Low profile
- Available in tape and reel packaging (Specifications vary based on the size of the part, please consult factory).
- Compliant to RoHS Specs

Applications

- Military personal communications (hand held radios, GPS equipment)
- GPS and car navigation equipment
- Cellular base station transceivers

Recommended Temperature Profile for Soldering

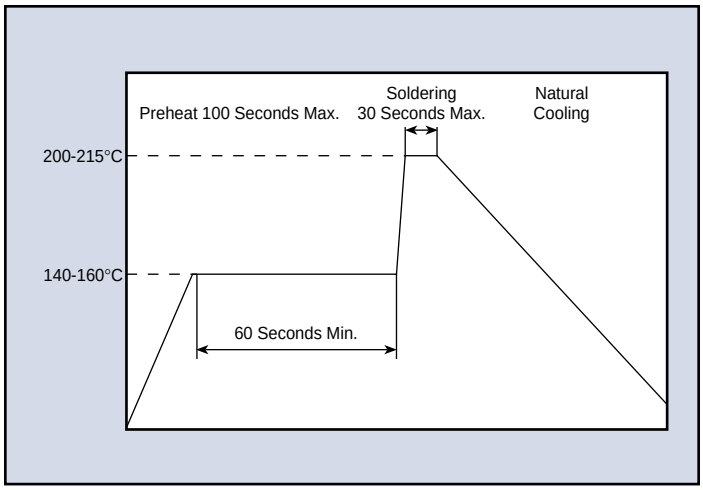

Typical Performance Characteristics

Temperature Range . . . . . -30 to 85°C
Frequency Range . . . . . 300 MHz to 5.8 GHz
Temperature Stability . . . . . ±5 ppm
Q Factor . . . . . 100 to 1,200
Impedance . . . . . 50 Ohm standard

Part Numbering System

Example: **MDC8T0836R0881A**

MD	C	8	T0836	R0881	A
Class	**Height**	**Number of Poles**	**Transmit Center Frequency (MHz)**	**Receive Center Frequency (MHz)**	**Series**
Monoblock **D**uplexers	**B** = 2 mm **C** = 3 mm **D** = 4 mm **F** = 6 mm		Use 4 digits	Use 4 digits	Assigned by factory

Duplexer
Monoblock Type

Standard Parts List

Part Number	Application	Center Frequency (MHz)	3dB Band-width (MHz)	# of Poles	Insertion Loss (dB)	Return Loss (dB)	Attenuation (dB@MHz)	L (mm)	W (mm)	H (mm)	Reference Outline
MDD7T813R858SA	GSM	813.5/858.5	15	7	2.2/3.1	10.5	Minimum isolation 49 @ 836	21.34	8.70	4.00	B
MDD7T813R858SB	AMPS	813.5/858.5	15	7	2.2/3.1	10.5	Minimum isolation 47 @ 836	21.34	8.70	4.00	B
MDF9T0836R0881A	AMPS	836 /881	25	9	2.5/4	11	46 @ 869-894 & 30 @ 650-824	12.67	33.53	6.50	G
MDE8T0836R0881A	Cellular	836.5 /881.5	25	8	3.0/4.2	10	38 @ 869-893;45 @ 824-849	8.95	21.59	4.25	D
MDD8T0836R0881A	CDMA	836.5 /881.5	25	8	2.4/3.3	13	42 @ 869-894 & 57 @ 824-849	8.70	21.34	4.00	B
MDD8T0836R0881B	CDMA	836.5 /881.5	25	8	2.8/3.6	12	40 @ 869-894 & 55 @ 824-849	8.97	15.70	3.40	E
MDD7T0836R0881SA	CDMA	836.5/881.5	25	7	2.4/3.3	13	Rejection @ Tx band: 60, @ Rx band: 44	21.34	8.70	4.00	B
MDD5T0942R097A	GSM	942/897	35	5	3.5/3.5	10	44.2 @ Tx band, 37.4 @ Rx band	8.00	21.34	4.00	B
MDE8T1227R1575SA	GPS	1227/1575	30	8	1.1/1.0	10	L1: 16 @ 1500, L2: 16 @ 1152	16.00	7.00	4.80	J
MDE4T1227R1575A	GPS	1227 /1575	2	4	2.5	10	30 @ 1127, 1475	8.46	23.16	4.47	A
MDFCT1542R1643A	Inmarsat	1542 /1643	34	12	1.5	10	65 @ 1626; 60 @ 1529	6.84	40.01	5.59	E
MDB7T1765R1855A	PCS Band	1765 /1815	30	7	3.0/3.2	9	39 @ 1840-1870;57 @ 1750-1780	6.25	12.52	2.05	E
MDE8T1822R1727SA	DCS	1822.5/1727.5	35	8	1.7/1.75	12.5	Rejection @ Tx band: 51.5, @ Rx band: 47.5	23.80	5.91	4.50	M
MDE8T1842R1747A	DCS	1842/1747	75	8	2.5/3.0	10	46.5 @ Tx band, 33.5 @ Rx band	5.91	23.80	4.60	F
MDEAT1880R1960B	PCS CMDA	1880 /1960	60	10	3.7/4.0	10	45 @ 1930-1990; 51 @ 1850-1910	5.64	22.91	4.60	F
MDE9T1880R1960B	PCS	1880 /1960	60	9	3.2/4.0	10	40 @ 1930-1990;48 @ 1850-1910	5.65	17.90	4.50	B
MDEBT1880R1960A	PCS	1880 /1960	60	11	3.4/3.4	11	38 @ 1930-1990 & 40 @ 1590-1780	5.95	28.20	4.90	C
MDE4T1880R1960SA	PCS	1880/1960	60	4	3/3.1	10	Rejection @ Tx band: 53, @ Rx band: 45	19.79	5.40	4.50	K
MDB6T1950R2140A	WCDMA	1950 /2140	60	6	1.4/2.0	10.5	45 @ 2110-2170 & 50 @ 1920-1980	5.30	9.80	1.85	D
MDB8T1950R2140SA	W-CDMA	1950/2140	60	8	1.3/1.5	15.5	Rejection @ Tx band: 54, @ Rx band: 46	7.00	5.25	1.70	N
MDE8T1960R1880SA	PCS	1960/1880	60	8	3.9/3.9	10.5	Rejection @ Tx band: 40.5, @ Rx band: 30.5	23.80	5.52	4.50	M
MDE8T2140R1950SA	W-CDMA	2140/1950	60	8	1.3/1.3	12.5	Rejection @ Tx band: 55.5, @ Rx band: 55.5	23.80	5.52	4.50	M

Note: Consult the factory for custom filter designs.

Reference Outlines

Figure A

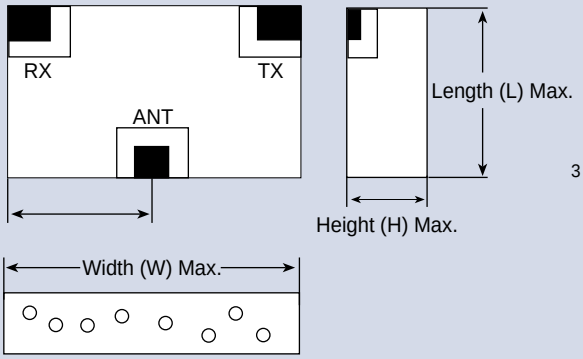

Figure B

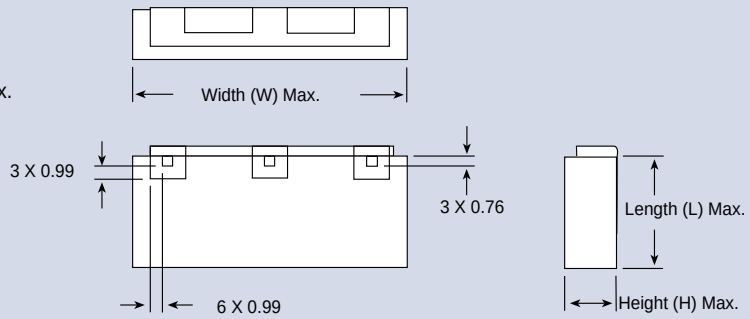

Note: For pad layout see spec sheets on web.

Dimensions in *mm*

SPECTRUM MICROWAVE • 2144 Franklin Dr. N.E. • Palm Bay, FL • Phone: 888-553-7531 • Fax: 888-553-7532
SPECTRUM MICROWAVE GmbH • Hansastrasse 6 • 91126 Schwabach, Germany • Phone: (49)-9122-795-0 • Fax: (49)-9122-795-58
www.specwave.com

Duplexer
Monoblock Type

Reference Outlines

Figure C

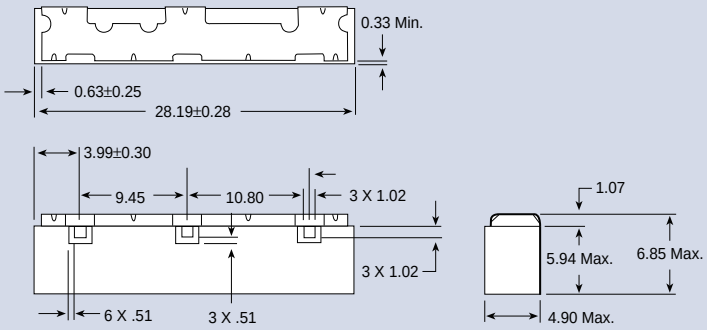

Figure D

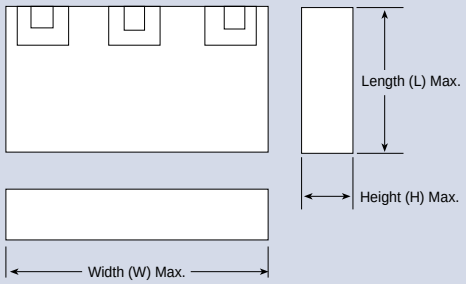

Figure E

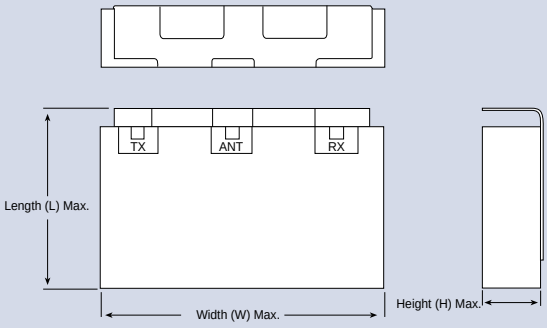

Figure F

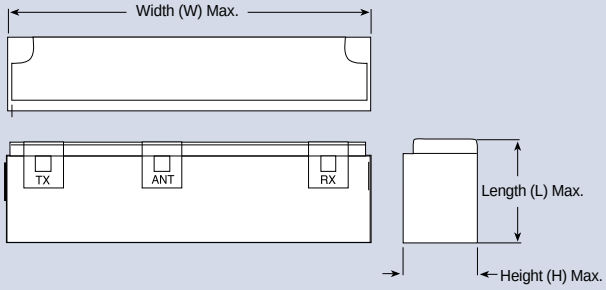

Figure G

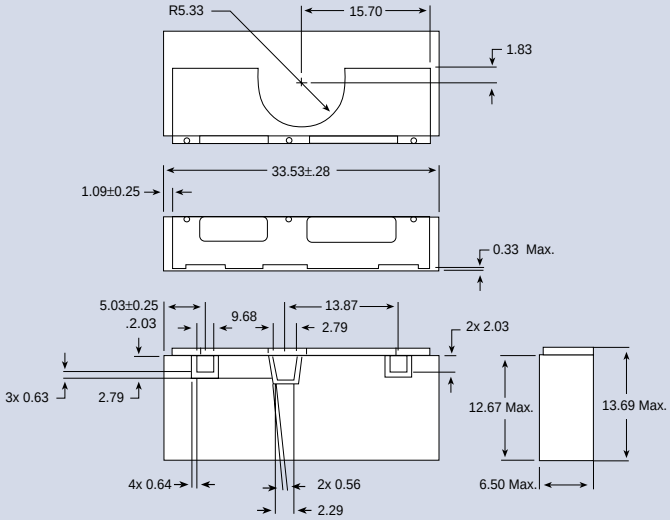

Note: For pad layout see spec sheets on web.

Dimensions in *mm*

Duplexer
Monoblock Type

Reference Outlines

Figure I

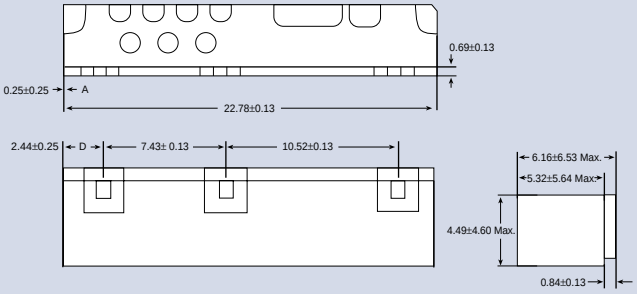

Figure J

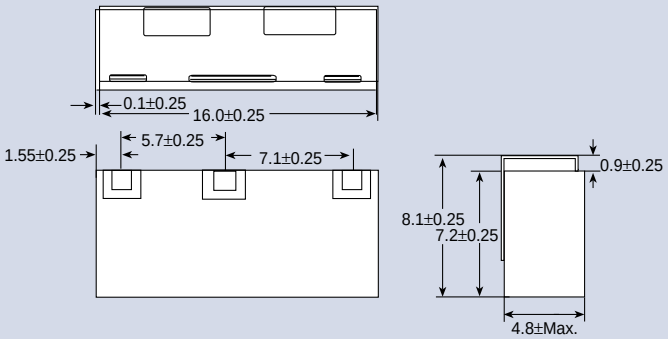

Figure K

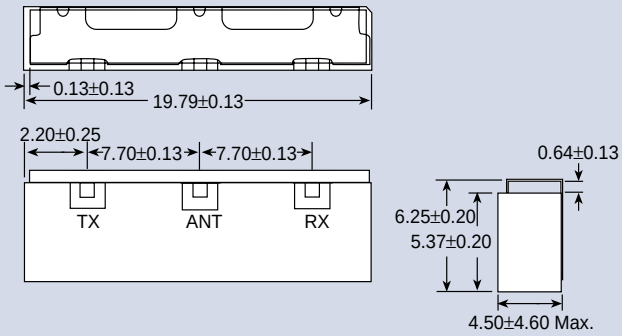

Figure L

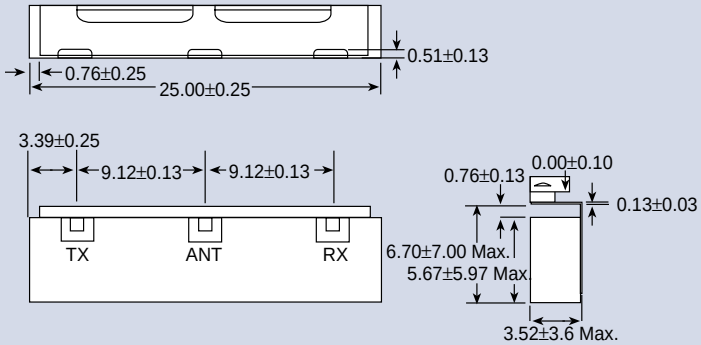

Figure M

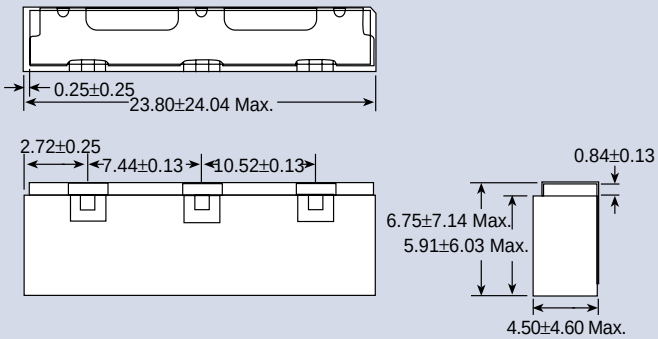

Figure N

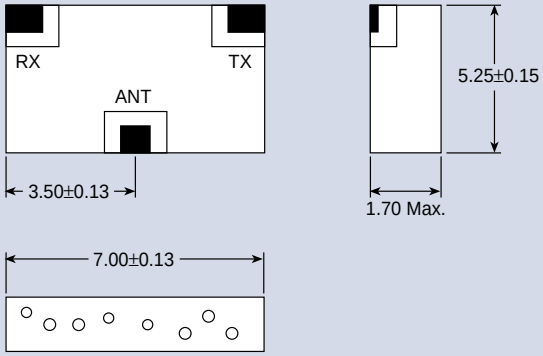

Dimensions in *mm*

SPECTRUM MICROWAVE • 2144 Franklin Dr. N.E. • Palm Bay, FL • Phone: 888-553-7531 • Fax: 888-553-7532
SPECTRUM MICROWAVE GmbH • Hansastrasse 6 • 91126 Schwabach, Germany • Phone: (49)-9122-795-0 • Fax: (49)-9122-795-58
www.specwave.com

Standard Filter Housings

Tubular Filters

1/4" diameter

SMA Connectors

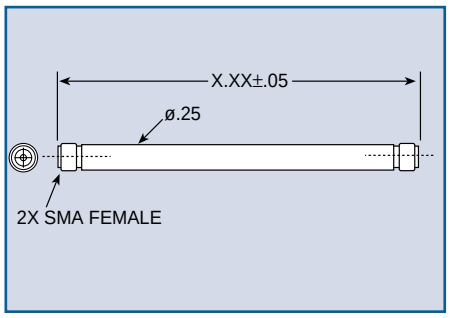

1/2" diameter

SMA Connectors

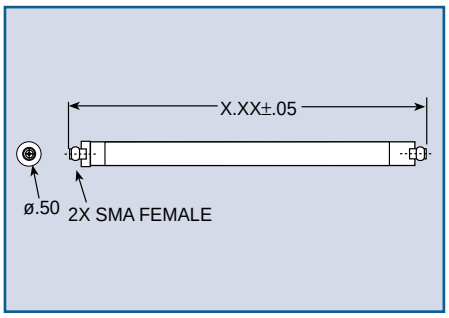

BNC Connectors

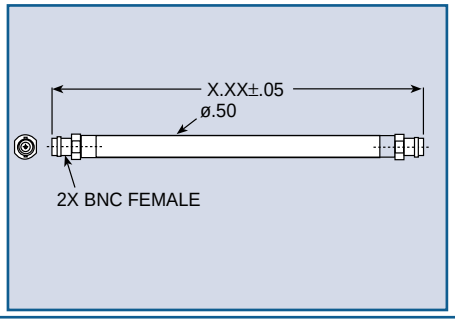

N Connectors

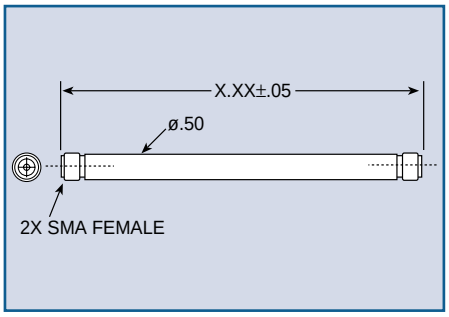

1 1/8" diameter

SMA Connectors

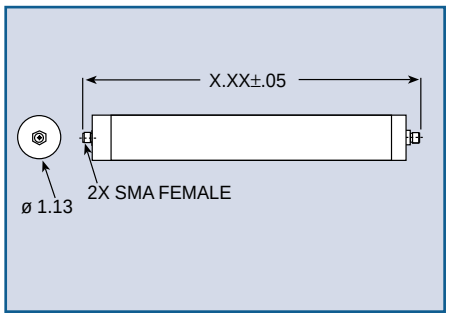

BNC Connectors

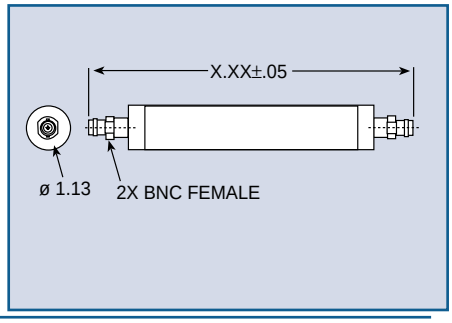

N Connectors

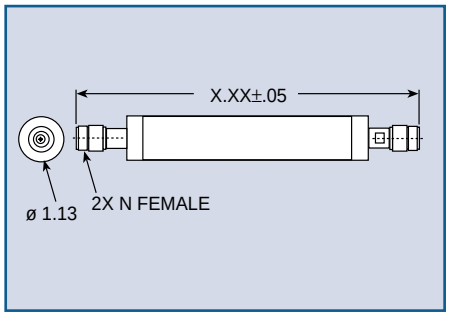

Standard Filter Housings

Lumped Element Filters

PC Pin Packages

SMA Connector Packages

Coaxial Pin Packages

2" Long

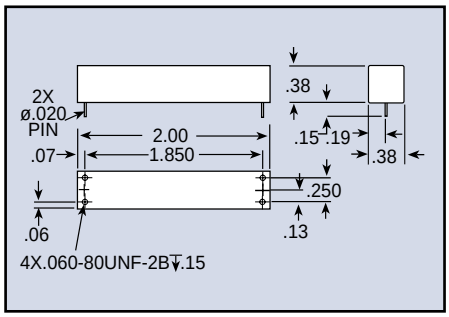

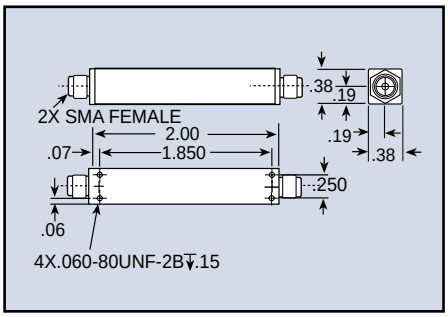

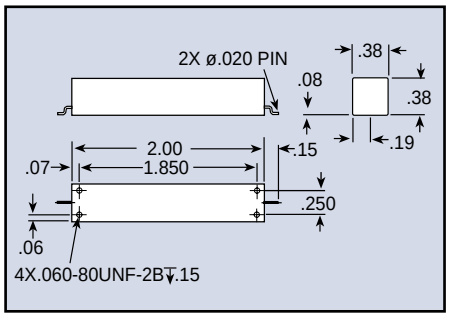

1.75" Long

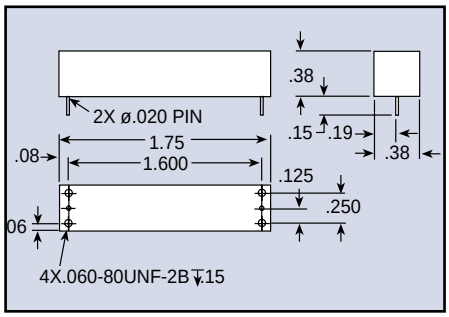

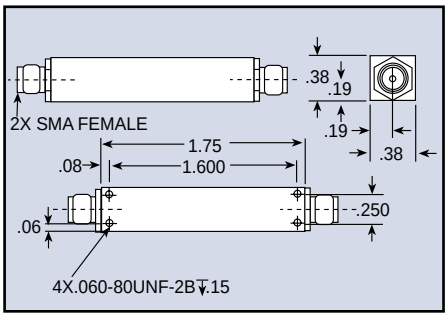

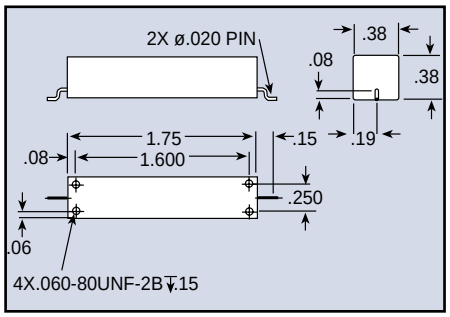

1.5" Long

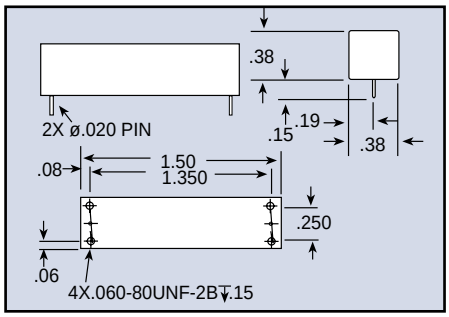

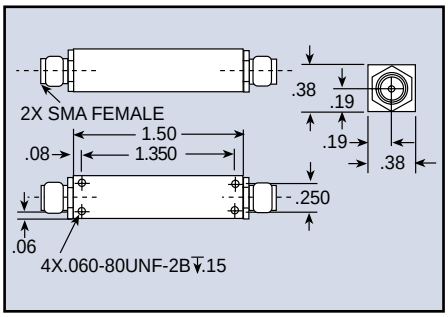

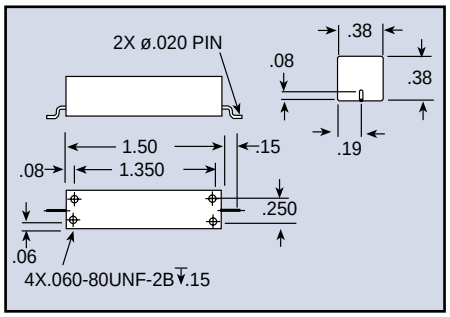

1.25" Long

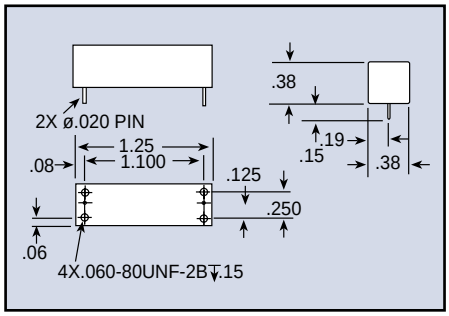

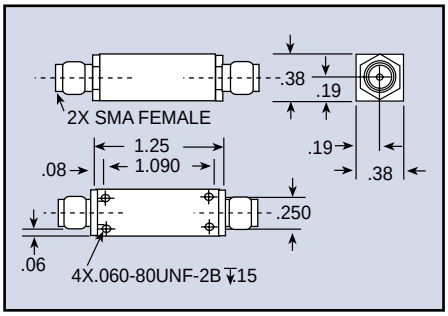

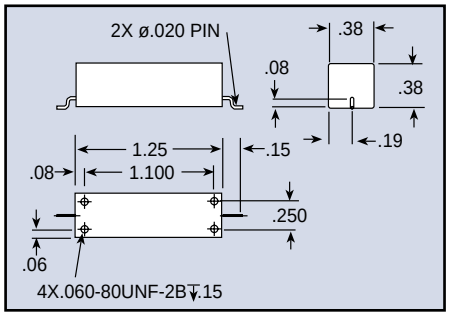

SPECTRUM MICROWAVE • 2144 Franklin Dr. N.E. • Palm Bay, FL • Phone: 888-553-7531 • Fax: 888-553-7532
SPECTRUM MICROWAVE GmbH • Hansastrasse 6 • 91126 Schwabach, Germany • Phone: (49)-9122-795-0 • Fax: (49)-9122-795-58
www.specwave.com

Standard Filter Housings

Lumped Element Filters

PC Pin Packages

1.0" Long

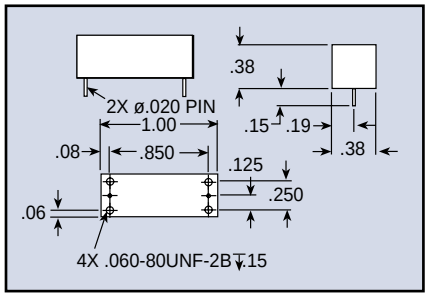

SMA Connector Packages

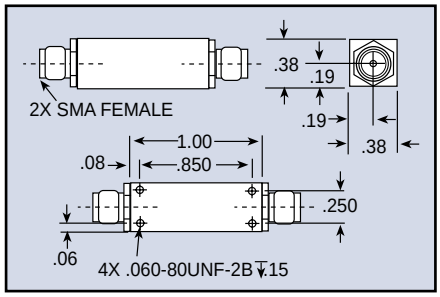

Coaxial Pin Packages

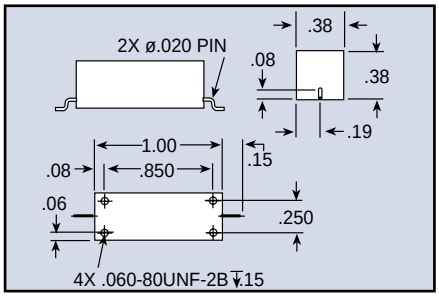

0.75" Long

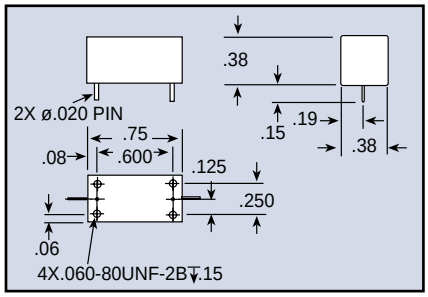

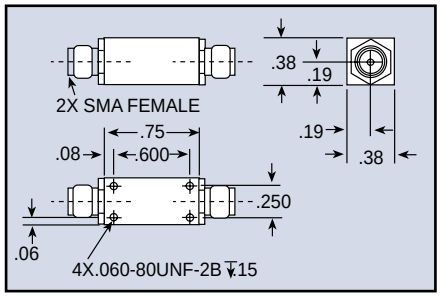

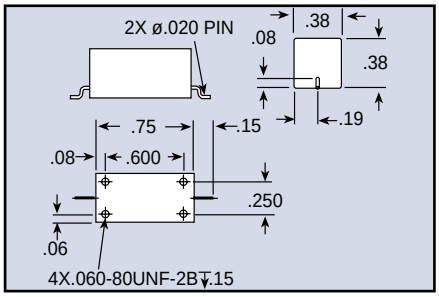

Cavity Filters

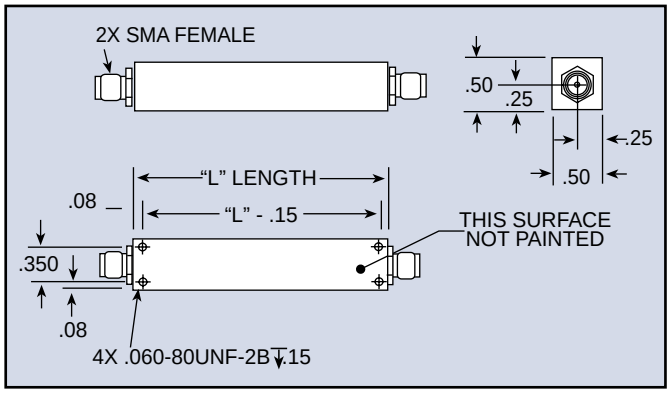

Surface Mount Lumped Element Filters

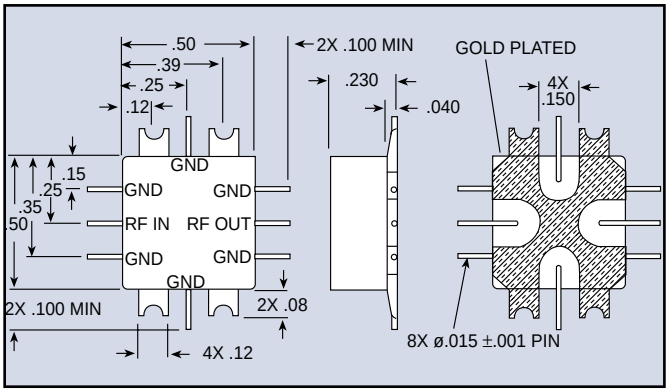

Base Station Products

Custom Base Station and Wireless Filter Products and Subsystems

Spectrum Microwave offers a variety of standard and custom filter products and subsystems, whether for existing systems or for the implementation of new systems at existing cell sites.

Spectrum Microwave works closely with its customers, from the initial RFQ stage through prototype development, in order to provide its customers with the most size and cost efficient solution possible. We take steps to ensure that sufficient performance margin is "designed in" for reliable operation under full environmental conditions.

Once a product is qualified, we can utilize any one of our many global manufacturing centers to minimize cost and ensure sufficient product throughput to the customer.

The basic building block fo these subsystems usually consists of a filter or duplexer/multiplexer, integrated with other active or passive components such as low noise amplifiers (LNAs), power dividers/combiners, directional couplers, isolators, bias tees, and VSWR monitors.

Filters

Application	Product Type	Part#	Passband (MHz)	Max. Insertion Loss (dB)	Min. Return Loss (dB)	Attenuation Frequency (dB @ MHz)	Size LxWxH (inches)	Comments
DCS	Filter	80626	1805-1850	0.5	20	70 @ DC-1745 70 @ 1910-1960	3.96 x 5.90 x 1.97	80 Watts CW
AMPS	Filter	80303	825-835 A band Receive	1.50	17	43 @ DC-823 43 @ 837-1500	12.20 x 6.20 x 3.00	
AMPS	Filter A band Transmit	80243	869 - 891.5	1.25	17	70 @ 896-940 60 @ 940-2300	12.20 x 6.20 x 3.00	
AMPS	Filter B band Receive	80237	835 - 849	1.50	17	60 @ DC-815, 45 @ 851-869 20 @ 845.25-846.25	12.20 x 6.20 x 3.00	
AMPS	Filter B band Receive	C840-847.5A 846.5 -849	835 - 845	2.00	15	43 @ DC-833 & 851-1100	19.00 x 2RU Standard RMT	
AMPS	Filter B band Transmit	80116	880-894	1.00	17	70 @ 835-849, 45 @ 869-878 & 896-2000	15.80 x 8.00 x 3.60	256 Watts CW, 8KW PEP
EGSM	Filter - Receive	80305	880 - 915	1.50	15	60 @ DC-840 23 @ 840-850 65 @ 925-2450	6.69 x 3.35 x 2.36	1 Watt CW
AMPS	Filter - Transmit	80120	869 - 894	0.35	18	58 @ 824-849	6.00 x 3.50 x 4.00	400 Watts CW, 3600 Watts PEP
ISM	Notch Filter	80222-S	From 2332.5-2334.4 & from 2343-2344.9	2.00	15	25 @ 2336.2-2341	5.90 x 5.90 x 2.20	0.5 Watts
AMPS	Receive Filter Dual bandpass	80304	825-835, 845-846.5	1.60	15	42 @ DC-822, 40 @ 847.3-1100	19.00 x 2RU STANDARD RMT	
UHF	Lowpass Filter	LR180-11SS-EHP	100 to 163	0.50	17	70@ 200 to 317	6.00 x 1.00 x 1.00	50 Watts avg, 200 Watts peak
UHF	Lowpass Filter	LR411-9SS-EHP-X	225 to 400	0.55	17	60@ 450 to 4000	3.88 x 1.93 x 1.00	150 Watts avg, 450 Watts Peak
Cellular-GSM	Lowpass Filter	LC1100-9NMN	750 to 1000	0.25	15	50 @ 2250 to 7000	0.50 x 5.93 dia. (T.T.)	
PCS	Lowpass Filter	LC2060-13SS	1250 to 2000	0.80	14	45 @ 2500 to 7000, 35 @ 7000 to 10000	0.50 dia. x 3.50 (T.T.)	50 Watts CW

Duplexer/Multiplexer Filters

Spectrum Microwave's years of experience designing filter based solutions for the telecommunication market and our capabilities to offer valued-added integrated products will provide you with answers that you need. Limited tower space, continued regulatory pressures and public opinion shape the requirements of designers.

Additionally, network operators continue to search for substantial cost savings by reducing cell sites and capital equipment. Efficient utilization of wireless components is a must and having Spectrum Microwave as your design partner will allow you to exceed customer expectations.

Base Station Products

Duplexer/Multiplexer Filters

Application	Product Type	Part#	Passband (MHz)	Max. Insertion Loss (dB)	Min. Return Loss (dB)	Min. Isolation (dB)	Size LxWxH (inches)	Comments
AMPS	Duplexer	80137	Ch1: 869 - 894 Ch2: 824 - 849	0.70	17	75	11.00 x 8.38 x 2.13	500 W CW, 8KW PEP
AMPS/PCS	Duplexer	80376-N	Ch1: 824 - 894 Ch2: 1850 - 1910	0.25	18	60	4.90 x 4.60 x 2.25	AMPS: 300 Watts average, 5kWatts PEP, PCS: 150 Watts average, 5KW PEP
AMPS/PCS	Duplexer	80432	Ch1: 824 - 896 Ch2: 1850 - 1990	0.2	20	45	7.85 x 6.63 x 1.28	AMPS: 500 Watts CW, 40kWatts PIP, PCS: 250 Watts CW, 20 kW PIP
AMPS/PCS	Duplexer	80432-NH	Ch 1: 824 - 896 Ch 2: 1850 -1990	0.2	23	45	7.85 x 6.63 x 1.28	Power AMPS: 500 Watts CW, PCS: 250 Watts CW
AMPS/PCS	Duplexer	DP1325-SS	Ch1: 800 - 900 Ch2: 1750 - 2000	Ch1: 0.5 Ch2: 0.7	15	25	0.40 x 0.60 x 1.50	1 Watt CW
GSM/DCS	Duplexer	DP1382.5-SS	Ch1: 921 - 960 Ch2: 1805 -1880	Ch1: 0.5 Ch2: 0.7	15	25	0.40 x 0.60 x 1.50	1 Watt CW
UMTS/DCS	Duplexer	80787	Ch1: 2110-2170 Ch2: 1805-1850	0.5	20	50	2.00 x 5.00 x 6.00	Passive IM products: -110 dBm min with two + 43 tones
GSM	Duplexer	80625A	Ch 1: 824 - 849 Ch 2: 869 - 894	0.5	20	60	4.97 x 7.10 x 4.00	3rd Order IM = -100dBm min (2x25 Watt tones)
DCS	Duplexer	80093	Tx: 1805 - 1880 Rx: 1710 - 1785	1.00	15	75	8.59 x 6.96 x 2.06	200 Watts CW, 2.5KW PEP
GSM	Duplexer	80310	Rx: 890 - 915 Tx: 935 - 960	0.50	17		8.50 x 6.50 x 2.75	100 Watts CW, 625 PEP
PCS	Duplexer	80132-A	Tx: 1930 - 1945 Rx: 1850 - 1865	0.75	18	75	4.10 x 2.00 x 1.50	25 Watts CW
PCS	Duplexer	80132-B	Tx: 1950 - 1965 Rx: 1870 - 18850	0.75	18	75	4.10 x 2.00 x 1.50	25 Watts CW
PCS	Duplexer	80132-C	Tx: 1975 - 1990 Rx: 1895 - 1910	0.75	18	75	4.10 x 2.00 x 1.50	25 Watts CW
PCS	Duplexer	80307	Rx: 1850 - 1910 Tx: 1930 - 1990	0.75	18	Tx: 75 Rx: 70	8.59 x 6.96 x 2.06	200 Watts CW, 2.5KW PEP
Tetra	Duplexer	80514-A	Tx: 390 to 395 Rx: 380 to 385	1.5	14	75	11.80 x 3.94 x 6.25	Power Rating: 25 Watts CW, 60 Watts PEP
Tetra	Duplexer	80514-B	Tx: 395 to 400 Rx: 385 to 390	1.5	14	75	11.80 x 3.94 x 6.25	Power Rating: 25 Watts CW, 60 Watts PEP
Tetra	Duplexer	80514-C	Tx: 420 to 425 Rx: 410 to 415	1.5	14	75	11.80 x 3.94 x 6.25	Power Rating: 25 Watts CW, 60 Watts PEP
Tetra	Duplexer	80514-D	Tx: 425 to 430 Rx: 415 to 420	1.5	14	75	11.80 x 3.94 x 6.25	Power Rating: 25 Watts CW, 60 Watts PEP
Tetra	Duplexer	80514-E	Tx: 460 to 465 Rx: 450 to 455	1.5	14	75	11.80 x 3.94 x 6.25	Power Rating: 25 Watts CW, 60 Watts PEP
Tetra	Duplexer	80514-F	Tx: 465 to 470 Rx: 455 to 460	1.5	14	75	11.80 x 3.94 x 6.25	Power Rating: 25 Watts CW, 60 Watts PEP
ISM	Duplexer	DP2412-2457-6ENN	Ch1: 2401 to 2423 Ch2: 22451 to 2473	1.5	18	80	5.50 x 6.40 x 1.90	Input power 2 Watts Max CW
ISM	Duplexer	DP2421-2462-8ESS	Ch1: 2408 - 2434 Ch2: 2449-2475	2	15	80	4.95 x 4.95 x 1.33	Power Rating 5 Watts CW
ISM	Duplexer	80671	Ch1: 5730 - 5764 Ch2: 5811 - 5845	1.8	16	80	4.15 x 3.40 x 1.28	Power Rating 25 Watts CW
UMTS	Duplexer	80539-N	Tx: 2110 to 2170 Rx: 1920 to 1980	1	14	80	4.80 x 4.65 x 1.38	Power Rating of 100 Watts CW 400 Watts PEP
ISM	Duplexer Ceramic	80221	Tx: 935-940 Rx: 896-901	Tx: 1.00 Rx: 1.75	18,15	Tx to ANT: 50		120 Watts CW, 480 Watts PEP
UMTS	Duplexer	80786	Tx: 2110 - 2170 Rx: 1920-1980	0.5 Typical, 1.0 max 17	80		6.30 x 5.70 x 2.40	500 Watts CW, 8KW PEP
PCS	Triplexer	80579-L	Rx:1866.25 - 1868.75 Tx1: 1945.625 - 1946.875 Tx2: 1948.125 - 1949.375	Rx: 1.5 Max Tx1: 1.5 Max Tx2: 1.5 Max	Rx: 20 Tx: 18	20 from Channel-Channel	10.00 x 8.00 x 1.70	Ultimate Rejection is 60 dB up to 6000 MHz
ISM	Triplexer	80675	Ch1: 2401 - 2423 Ch2: 2426 - 2448 Ch3: 2451 - 2473	3.5 Max	18	50 all channels	12.75 x 10.85 x 1.83	Passband flatness 2.75 max all channels

Base Station Products

Receiver Multicouplers

Receiver multicouplers allow the operation of more than one receiver to operate with a single antenna, while realizing the same performance as using a single dedicated antenna for each receiver. Typically, a net gain is realized at each receiver port while the signal to noise ratio is minimized.

Spectrum Microwave offers receiver multicouplers for both analog and digital communications systems that can be easily expanded to up to 32 channels. They typically include a preselector filter, LNA, bias tee, power divider(s), DC power and VSWR monitors. These assemblies can be designed to be integrated within the base station or as a stand alone sub-system to connect with the base station at the cell site.

When the preselector filter is replaced with a duplexer, the assembly can be easily modified to incorporate transmit combining capability via the Tx port of the duplexer.

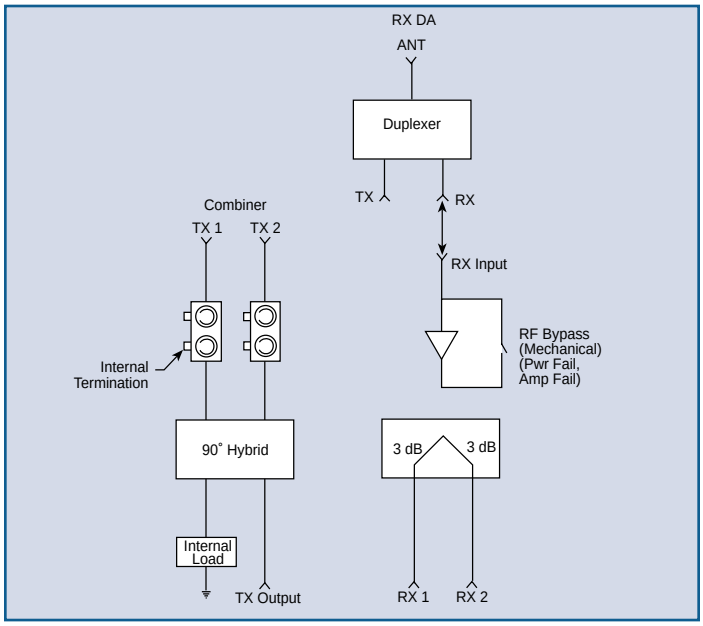

LNA/Filter-Duplexer Assemblies

LNA/Filter assemblies are utilized to provide amplification of weak receive signals while minimizing noise figure and transmitter interference. These assemblies can be in the base station or as a Tower Mounted Amplifier (TMA).

Spectrum Microwave specializes in developing custom, application specific assemblies for it's customers. These LNA assemblies can incorporate single or multistage amplification, single or redundant branching, with various types of biasing options and alarm circuitry. The type and location of the preselector filtering in the assemblies is optimized to minimize the overall noise figure while providing the appropriate frequency selectivity.

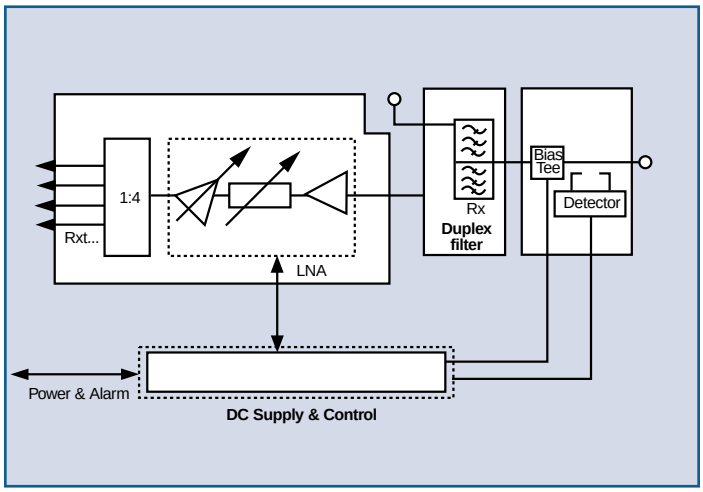

SPECTRUM MICROWAVE • 2144 Franklin Dr. N.E. • Palm Bay, FL • Phone: 888-553-7531 • Fax: 888-553-7532
SPECTRUM MICROWAVE GmbH • Hansastrasse 6 • 91126 Schwabach, Germany • Phone: (49)-9122-795-0 • Fax: (49)-9122-795-58
www.specwave.com

Base Station Products

Tower Mounted Amplifiers

Tower Mounted Amplifiers are often utilized to overcome downline coaxial cable losses and to improve receiver sensitivity. They can also be used to extend base station coverage in repeater applications.

The typical Spectrum Microwave TMA assembly includes preselector filtering (or duplexing), amplifier/bypass circuitry, bias tee, and lightening/impulse suppressors. The units can be housed in either standard NEMA rated, or custom enclosures and are designed to withstand even the harshest, salt air environments.

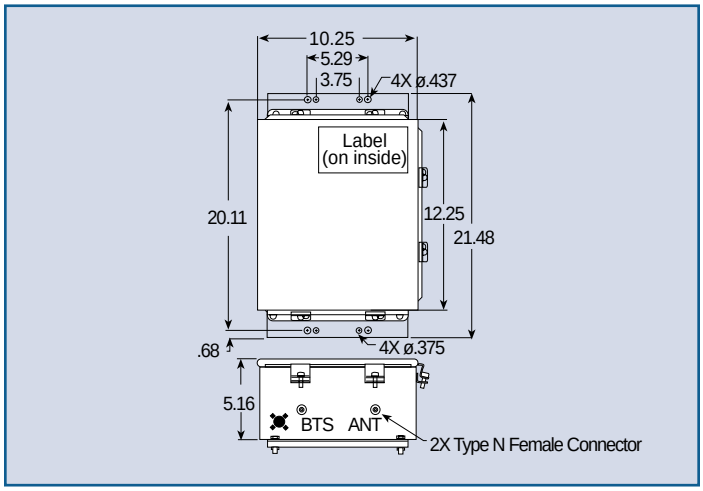

Transmit Combiners

Transmit combiners allow the operation of two or more transmitters with a single antenna while providing isolation between the combined transmitters. Spectrum Microwave manufactures two basic types of combiners, cavity and hybrid types.

Cavity type combiners are constructed of single or dual narrow bandpass cavities, usually integrated with single or dual stage isolators. The advantages of this approach are lower insertion loss, additional filtering and high isolation. Some disadvantages include limited channel spacing and capability, as well as large size.

Hybrid type combiners are typically realized using a 3 dB branch line configuration, and are also usually integrated with single or dual stage isolators. In some instances, a conventional “Wilkinson” type of construction is also utilized. The advantages of this type of combiner include having no minimum channel spacing requirements, relatively compact size and easy expandability. The major disadvantage is higher insertion loss.

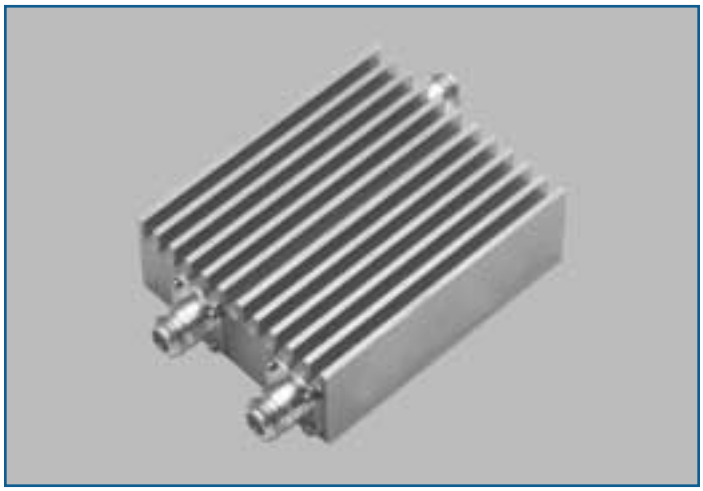

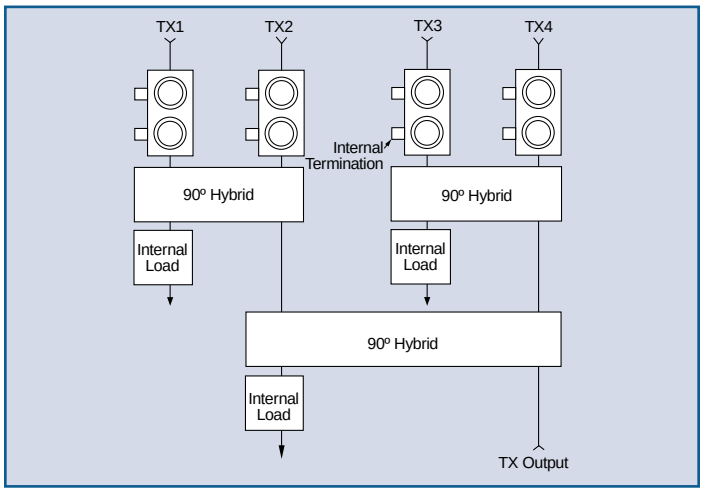

Base Station Products

Directional Couplers

Directional couplers can be used to sample or inject signals throughout the base station. They can be supplied as stand alone products or integrated into various filter products and sub-systems. The coupled port(s) are typically connected to detectors and alarm circuitry when utilized for power or VSWR monitoring. Additionally, built in test (BIT) signals can be injected via the coupled port(s) for system self test monitoring.

Spectrum Microwave directional couplers feature high directivity, low passive Intermodulation, and are designed for specific frequency bands and coupling values to minimize complexity and cost. Both single and dual directional units are available.

Power Dividers/Combiners

Power dividers/combiners are passive components that split an input signal into two or more identical outputs (in both phase and amplitude), or combine two or more separate signals into a common port. A typical application would be splitting the output from a LNA and distributing the signal to various receivers.

Spectrum Microwave offers both low and high power units for use as stand alone products or for integration into other filter products and sub-systems. Because these components are custom designed for specific frequency bands and power levels, size, complexity and cost can be minimized.

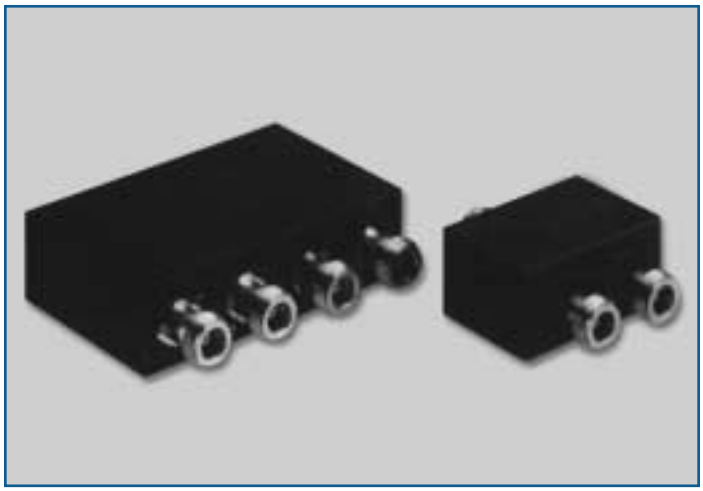

Power Dividers/Couplers/Combiners

Application	Product Type	Part#	Passband (MHz)	Max. Insertion Loss (dB)	Min. Return Loss (dB)	Min. Isolation (dB)	Size LxWxH (inches)	Comments
Cellular	Power Divider Combiner, 2 Way	80119-2	800 - 900	0.40	19	25	1.50 x 2.25 x 1.06	Max. Amp. Balance 0.15dB, Max. Phase Balance 1°
Cellular	Power Divider/ Combiner, 4 Way	80119-4	800 - 900	0.70	19	22	2.50 x 4.00 x 1.13	Max. Amp. Balance 0.15dB, Max. Phase Balance 3°
PCS	Power Divider/ Combiner, 2 Way	80117-2	1850 - 1990	0.20	19	25	1.50 x 2.25 x 1.13	Max. Amp. Balance 0.15dB, Max. Phase Balance +/- 2°
PCS	Power Divider/ Combiner, 4 Way	80117-4	1850 - 1990	0.40	19	30	2.50 x 4.00 x 1.13	Max. Amp. Balance 0.15dB, Max. Phase Balance +/- 3°
ISM	Combiner	80192-937	912 - 963	0.55	18	22	4.43 x 3.74 x 1.50	60W CW
ISM	Coupler Dual direction	80130-2	800 -960	0.15	18		3.00 x 1.75 x 1.25	Forward coupling: 50 +/-0.25, Reverse coupling: 40 +/-0.25, 300W CW, Directivity: 22dB min.

Delay Line Assemblies

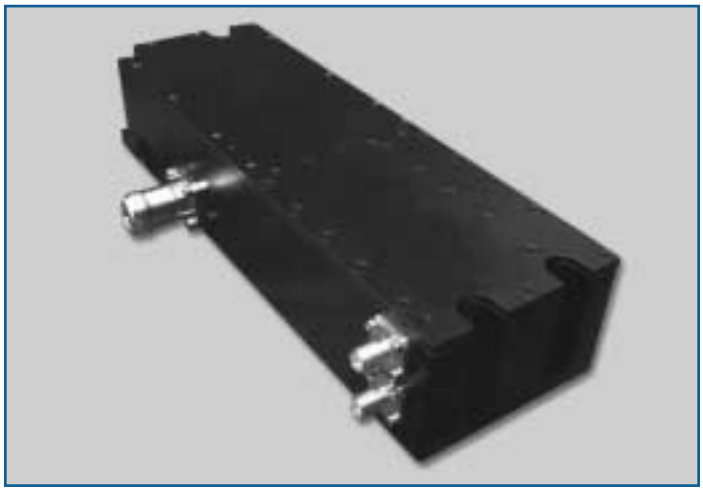

Delay Line Assemblies are used in high power feed forward amplifier applications. The assemblies typically consist of a delay line filter, one or two couplers, and an isolator. The directional couplers are used for sampling and feed forward injection of the signal to provide the amplifier manufacturer with cancellation of the Intermodulation products generated by the power amplifier. By integrating the components within an assembly, losses associated with interconnects are minimized, overall costs are reduced and product reliability is increased.

Spectrum Microwave has designed and manufactured custom configured units for GSM-1800, PCS-1900 and UMTS applications.

Cross-Band Couplers

While technically a duplexer or triplexer, cross-band couplers are specifically designed to allow base station cosite operation with the use of a common feeder cable (feeder sharing). An example would be to allow the combining of GSM1800 and UMTS base station outputs onto a single feeder cable. At the antenna end, a second unit would be utilized to separate the two bands to the TMA or antenna as required. Tri-band units (cross-band triplexers) are also available for combining three services onto a single feeder cable.

Spectrum Microwave cross-band couplers are specifically designed to provide extremely low insertion loss, low passive intermodulation distortion, and high band to band isolation. Critical attention is also given to peak power handling ability, since multiple channels from different base stations are being combined. Additionally, most units are available with DC bypass circuitry to allow for TMA biasing via the RF feeder cable. Both indoor and outdoor units are available.

SPECTRUM MICROWAVE INC.
A Spectrum Control Business

Microwave Subsystems & Assemblies

Section Index	Page
Switched Filter Banks	71-74
Isolated Switched Filter Banks	75-76
Digitally Tuned Oscillators (DTOs)	77
GPS Low Noise Amplifiers	78-80
Harmonic Multipliers	81-82
Frequency Multipliers	83-87
Microwave Synthesizers	88

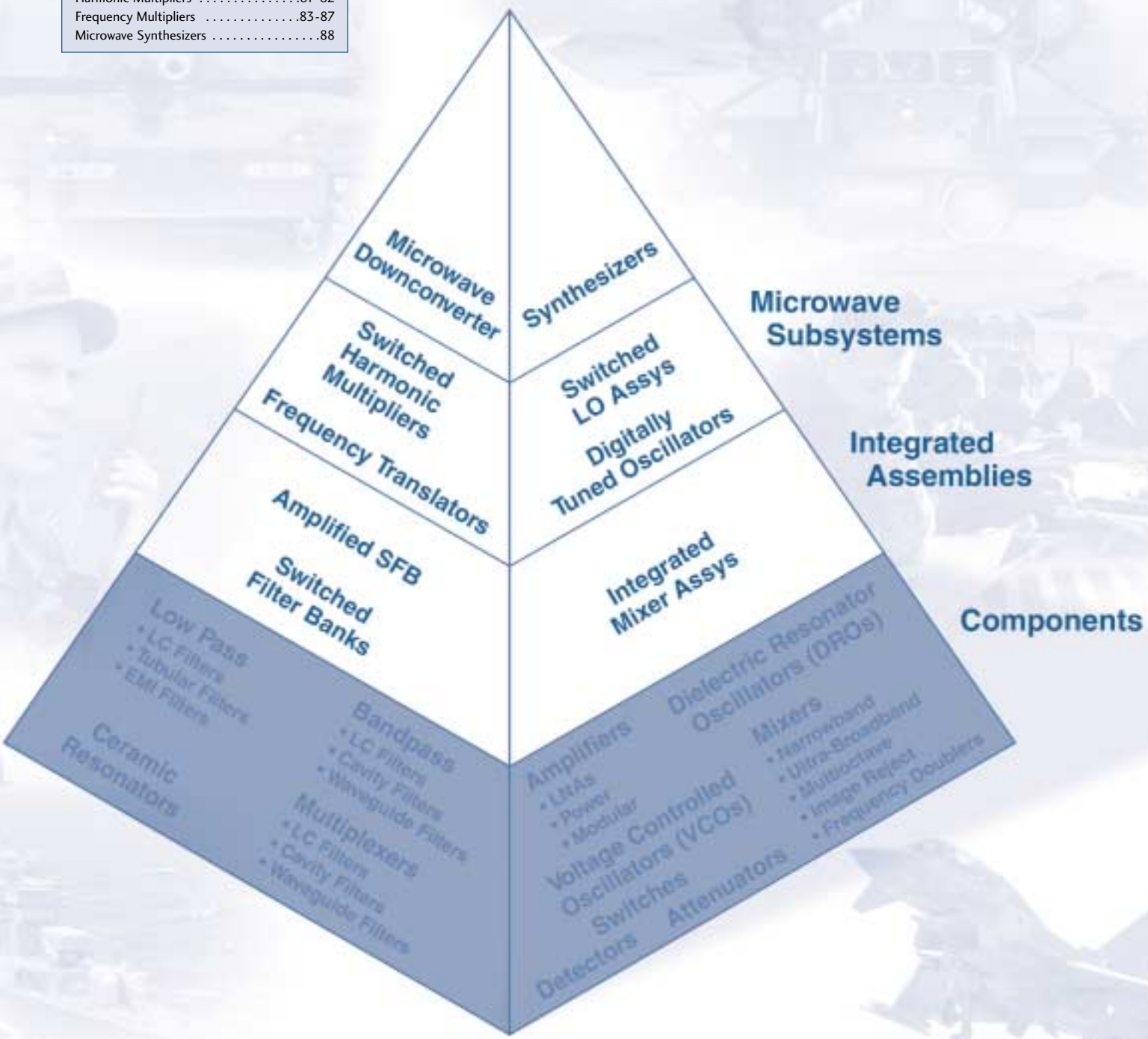

Switched Filter Banks
7 Channel Bank

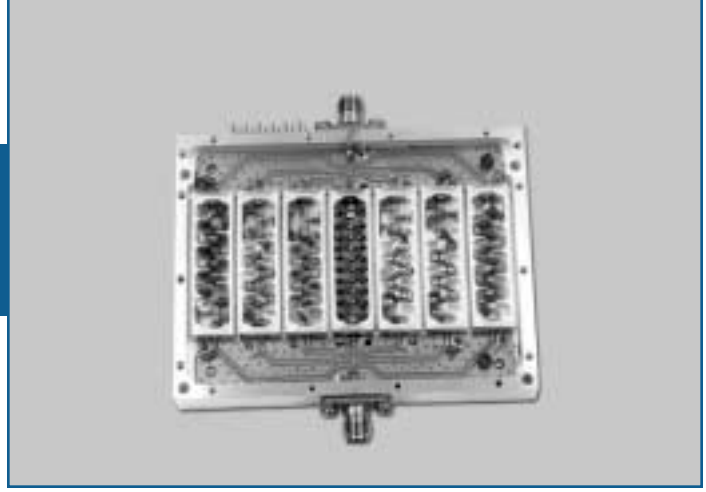

RF Preselector
Passband 100 - 7000 MHz
Stopbands to 20 GHz

Spectrum Microwave's 7-channel RF preselector filter provides seven selectable RF filter channels over a wide frequency range with ultimate rejections out to 20 GHz. Modular construction allows customization of band splits to provide continuous overlapping band performance.

The individual channels can be configured over a wide range of frequencies from 100 MHz to 7000 MHz. Channels 1 thru 6 are miniature lumped element bandpass filters while Channel 7 is an interdigital cavity filter. This low-profile filter bank provides excellent low-ripple passband performance while suppressing ultimate rejections by >70 dB out to 20 GHz. The filter bank is powered by +5V, -12V DC applied to external bias pins mounted on the sides of the unit.

Features
- 70 dB min ultimate rejections to 20 GHz
- High linearity (IP3 +44 dBm min)
- No heater 500 mW power max
- Fast switching speed 200 nsec max
- Low video feedthru 1.5mV max
- VME compatible package 0.35 in max
- Lightweight housing 4.5 oz max

Dimensions and Connections
TBD L x 3.10" W x 0.35" H excluding SMA connectors and control pins. Final length depends upon customer requirements for filter performance.

Block Diagram

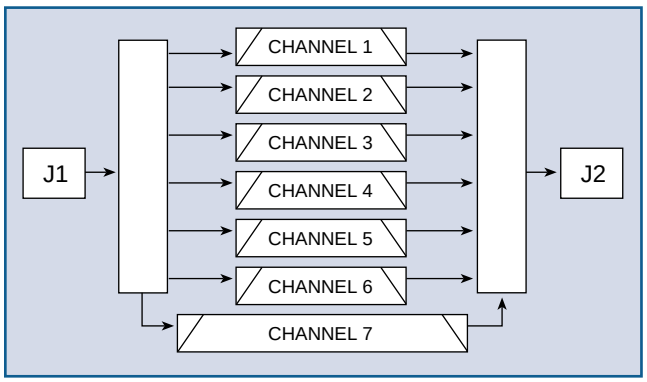

Typical Performance Characteristics

Frequency Range ..... 100 to 7000 MHz
Switching Speed .....400 nsec max
Input 1 dB Compression..... +15 dBm min
Amplitude Ripple (over 500 MHz BW)..... +/-0.5 dB
Third Order Intercept..... +44 dBm min
VSWR..... 1.8:1 max
Insertion Loss ..... 6 dB max
Switching Type..... TTL
DC Power..... 5V@150 mA, -12V@60 mA
Temperature Range..... -10°C to +65°C
All specifications above measured at 25°C

Dimensions

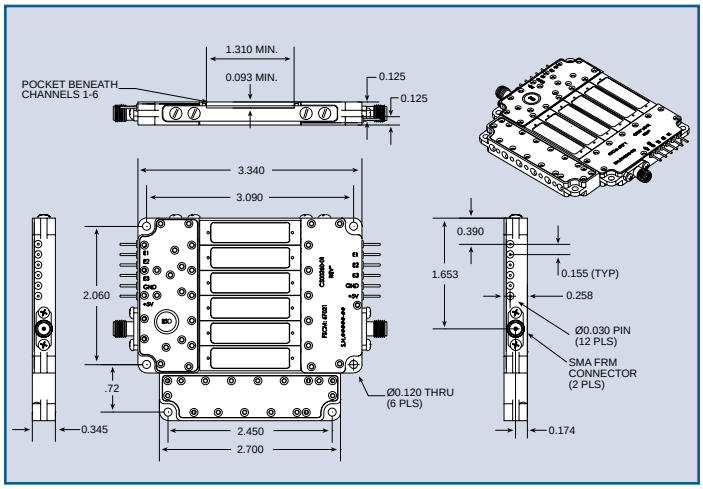

Switched Filter Banks
5 Channel Bank (High Freq.)

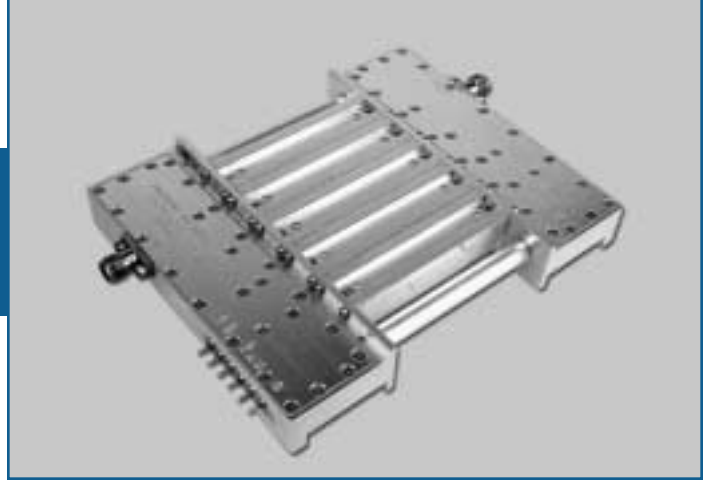

Microwave Preselector Filter
Passband 3 - 20 GHz
Stopbands to 26 GHz

Spectrum Microwave's 5-channel microwave preselector filter provides five selectable filter channels over a wide frequency range with ultimate rejections out to 26 GHz. Modular construction allows customization of band splits to provide continuous overlapping band performance.

The individual channels can be configured over a wide range of frequencies from 3 GHz to 20 GHz. The channels are Chebychev interdigital bandpass cavity filters. This low-profile filter bank provides excellent low-ripple passband performance while providing ultimate rejections of >70 dB out to 26 GHz. The filter bank is powered by +5 V, -12V DC applied to external bias pins mounted on the sides of the unit.

Features
- 70 dB min ultimate rejections to 26 GHz
- No warmup time
- No heater 1.1 W power max
- Fast tuning speed 400 nsec max
- Low video feedthru
- VME compatible package height 0.35 in max
- Lightweight housing 7.1 oz max

Dimensions and Connections
TBD L x 3.10" W x 0.35" H excluding SMA connectors and control pins. Final length depends upon customer requirements for filter performance.

Block Diagram

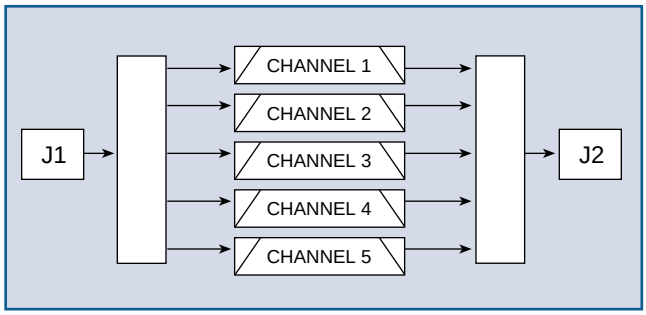

Typical Performance Characteristics

Frequency Range..... 3 to 20 GHz
Switching Speed .....400 nsec max
Input 1 dB Compression..... +15 dBm min
Amplitude Ripple..... +/-0.5 dB
Group Delay Variation.....<2 nsec
Third Order Intercept..... +40 dBm min
VSWR..... 1.8:1 max
Insertion Loss ..... 8 dB max
Switching Type..... TTL
DC Power..... 5V@150 mA, -5V@65 mA
Temperature Range..... -10°C to +65°C
All specifications above measured at 25°C

Dimensions

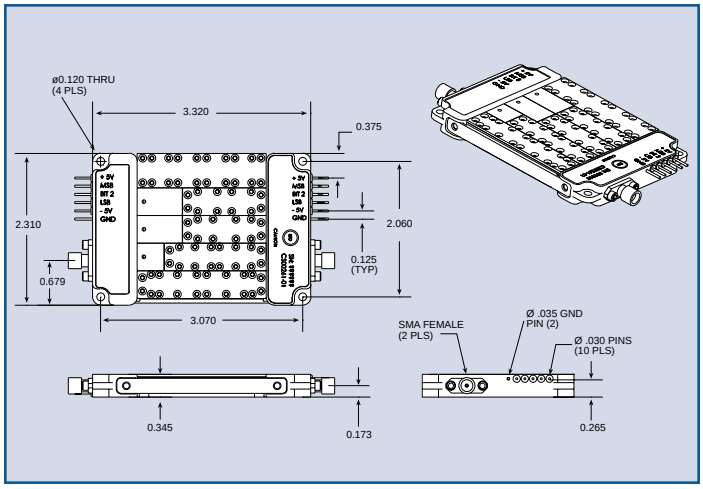

Switched Filter Banks

SPECTRUM MICROWAVE • 2144 Franklin Dr. N.E. • Palm Bay, FL • Phone: 888-553-7531 • Fax: 888-553-7532
SPECTRUM MICROWAVE GmbH • Hansastrasse 6 • 91126 Schwabach, Germany • Phone: (49)-9122-795-0 • Fax: (49)-9122-795-58
www.specwave.com

Switched Filter Banks
5 Channel Bank (Low Freq.)

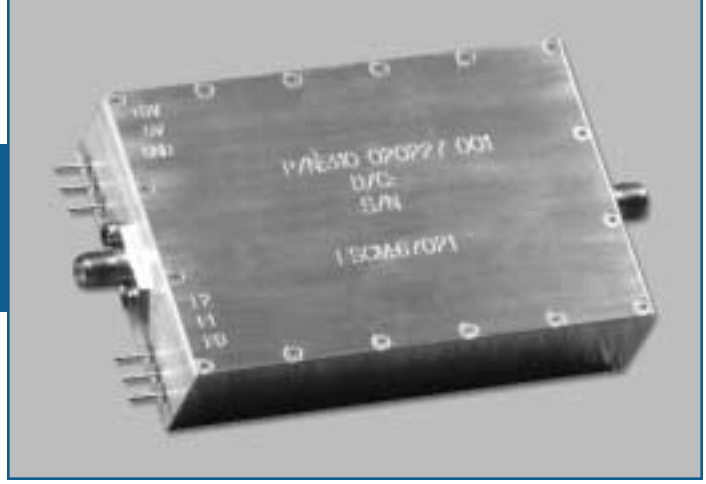

Wide Band 5 Channel Filter Bank

Passband 1 - 3 GHz

Spectrum Microwave's 310-020227-001 filter bank provides five selectable filter channels over a wide range of operation in a relatively small package.

One compact unit covers a wide range of frequencies, typically 1 GHz to 3 GHz. Channels 1 through 5 are miniature lumped element bandpass filters with electrical specifications completely customizable by the end user. This relatively small filter bank provides a minimum of 30 dB of isolation in between non-selected passbands and 40 dB stopbands.

The filter bank is powered by ±5V DC applied to external bias pins mounted on the end of the unit. A grounding terminal is also provided. Three control pins provide TTL selection of the desired operating band.

Features

- Small Physical Package (5.2 in^3 max)
- High Power Handling +25 dBm min
- Wide Band Operation
- High Speed 395 nsec max
- Low Video Feedthru 1.2 mV max
- Low Insertion Loss 3 dB max
- High Isolation
- Excellent IMD Suppression

Dimensions and Connections

3.25" L x 2.125" W x 0.750" H excluding SMA connectors and control pins.

Typical Performance Characteristics

Frequency (GHz)	1.0 - 1.3 (CH1)
	1.3 - 1.6 (CH2)
	1.6 - 1.9 (CH3)
	1.9 - 2.2 (CH4)
	2.2 - 2.5 (CH5)
Switching Speed	395 nsec on max
	174 nsec off max
Input 1 dB Compression	+25 dBm min
Second Order Intercept	+70 dBm min
Third Order Intercept	+45 dBm min
VSWR	1.8:1 max
Insertion Loss	3 dB max
Switching Type	TTL
DC Power	5V@150 mA max, -5V@1.5 mA max
Temperature Range	-40°C to +85°C

All specifications above measured at 25°C

Dimensions

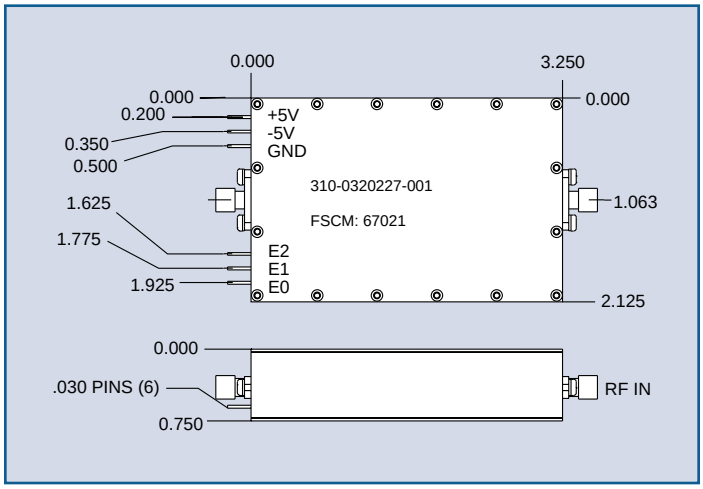

Switched Filter Banks
2 Channel Bank

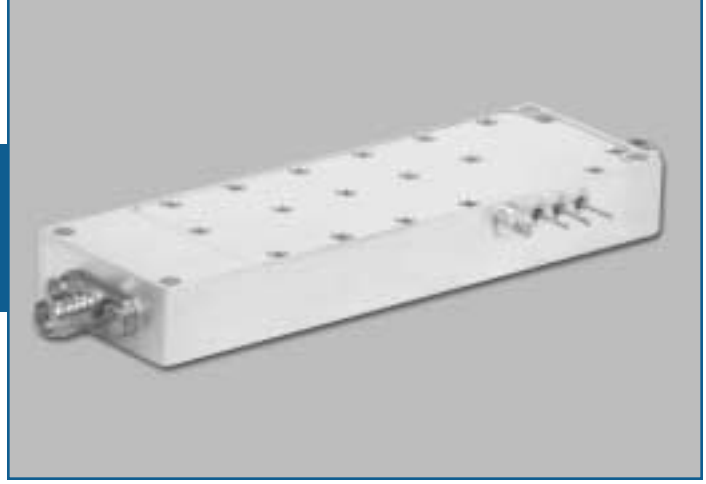

RF/IF Preselector

Passband 1 - 2000 MHz
Stopband to 18 GHz

Spectrum Microwave's 310-020226-001 filter bank provides two selectable RF filter channels over a wide frequency range with ultimate rejections out to 18 GHz.

Two individual channels can be customized over a wide range of frequencies, typically 1 MHz to 2000 MHz. Channels 1 and 2 are miniature lumped element bandpass filters. This relatively small filter bank provides excellent passband performance while providing ultimate rejections by 50 dB max out to 18 GHz.

The filter bank is powered by +5V DC applied to an external bias pin mounted on the side of the unit. A grounding terminal is also provided. One control pin provides TTL selection of the desired operating channel. The unit is bi-directional with SMA field removable connectors.

Features

- 50 dB min Ultimate Rejections to 18 GHz
- Low Insertion Loss 2.7 dB max
- Wide Band Operation
- High Speed 160 nsec max
- Low Video Feedthru 1.5 mV max
- Small Physical Package (1.74 in^3 max)
- Aluminum Housing

Dimensions and Connections

3.50" L x 1.10" W x 0.45" H excluding SMA connectors and control pins.

Typical Performance Characteristics

Frequency (MHz)	300 - 600 (CH1) 400 - 500 (CH2)
Switching Speed	160 nsec on max 104 nsec off max
Input 1 dB Compression	+15 dBm min
Second Order Intercept	+73 dBm min
Third Order Intercept	+39 dBm min
VSWR	1.8:1 max
Insertion Loss	2.7 dB max
Switching Type	TTL
DC Power	+5V@1.5 mA
Temperature Range	-40°C to +85°C

All specifications above measured at 25°C

Dimensions

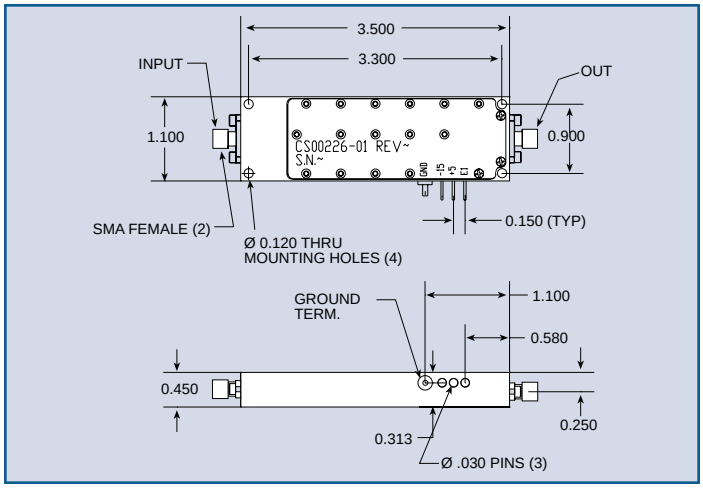

SPECTRUM MICROWAVE • 2144 Franklin Dr. N.E. • Palm Bay, FL • Phone: 888-553-7531 • Fax: 888-553-7532
SPECTRUM MICROWAVE GmbH • Hansastrasse 6 • 91126 Schwabach, Germany • Phone: (49)-9122-795-0 • Fax: (49)-9122-795-58
www.specwave.com

Isolated Switched Filter Banks

1000 MHz Center Frequency

The 310-020372-001 Isolated Switched Filter Bank provides the system designer with a compact, two-channel selectable filter suitable for IF filtering.

Input and output isolators present a consistent 50 Ohm load to driving and load impedances. A pair of SPDT RF PIN diode switches routes incoming signals to one of two possible filter paths. One path filters to an 85 MHz bandwidth while the other filters to a 50 MHz bandwidth.

As the highly selective filters do not inherently exhibit good return loss, the isolators improve the VSWR performance and preserve the filtering transfer function irrespective of driving and source impedances. As an additional benefit, the Filter Bank exhibits 40 dB of reverse isolation.

Features

- Dual Selectable Bandwidths (85 and 50 MHz)
- Isolated RF input and output
- Low Passband Ripple 0.25 dB
- Lightweight aluminum housing
- 40 dB Reverse Isolation
- Wide operating temperature range
- Internal voltage regulation
- Conduction cooled
- Fast switching 400 nsec max

Dimensions and Connections

Isolated RF Input	J1
Isolated RF Output	J2

6.50" L x 1.75" W x 1.00" H excluding connectors

Chassis is machined aluminum with a silver plate finish and is non-hermetic.

Typical Performance Characteristics

Center Frequency ..... 1000 MHz

Filter #1 Bandwidth..... 85 MHz (1dBc)

Filter #2 Bandwidth..... 50 MHz (1dBc)

Insertion Loss ..... 7 dB max

VSWR ..... 1.7:1 max (over 85% of dB Bandwidth)

Passband Ripple..... 0.25 dB

Switching Speed ..... 400 nsec max

DC Power ..... +5V @ 100mA typ
-15V @ 40mA typ

Temperature Range..... -10°C to +65°C

Weight..... 8 oz.

All specifications above measured at 25°C

Dimensions

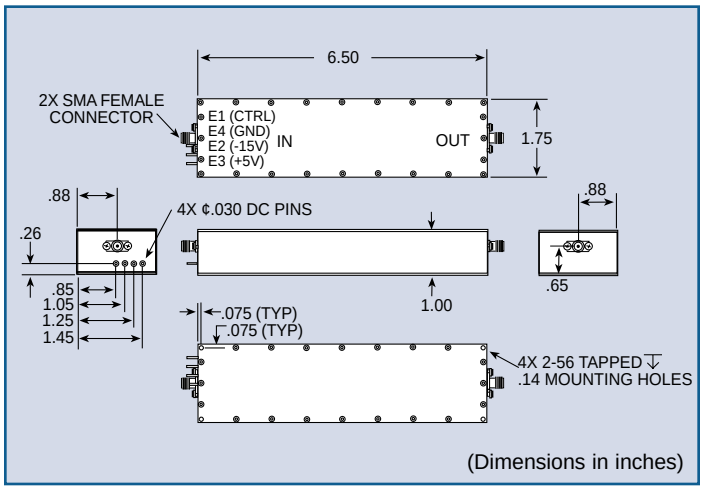

Isolated Switched Filter Banks

Figure 1

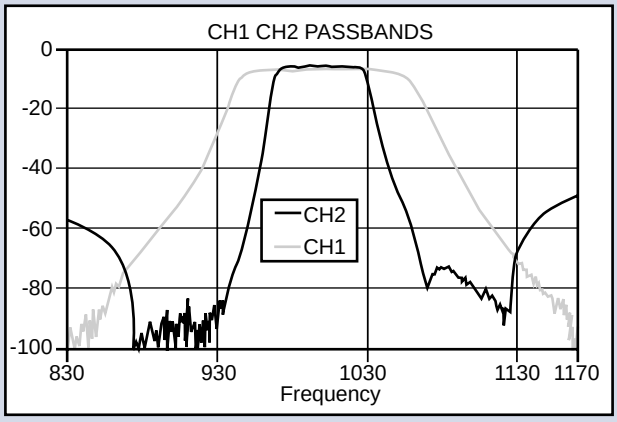

Channel 1 and Channel 2 Passband Transmission Response

Figure 2

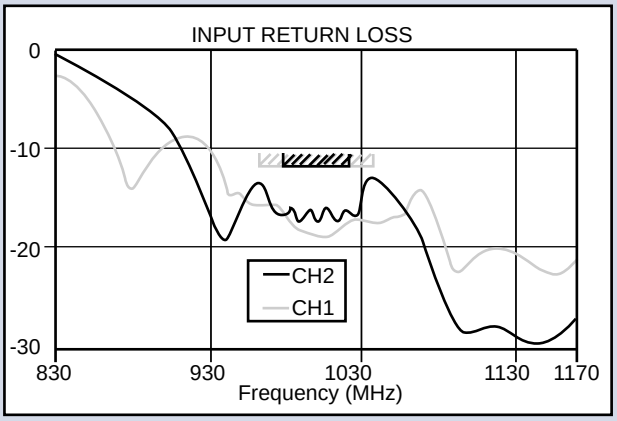

Channel 1 and Channel 2 Input Return Loss Response

Figure 3

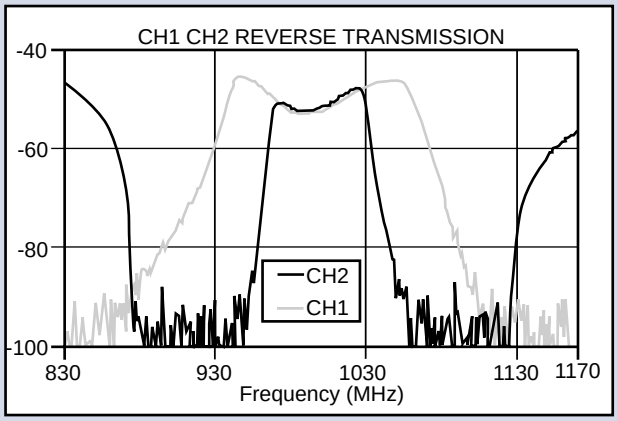

Channel 1 and Channel 2 Reverse Transmission Response

Figure 4

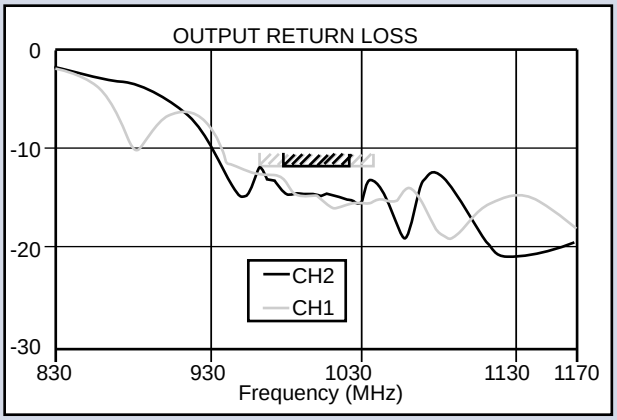

Channel 1 and Channel 2 Output Return Loss Response

Block Diagram

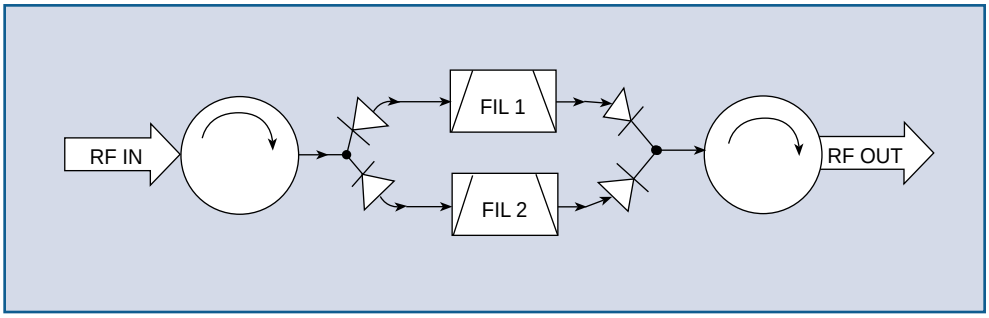

SPECTRUM MICROWAVE • 2144 Franklin Dr. N.E. • Palm Bay, FL • Phone: 888-553-7531 • Fax: 888-553-7532
SPECTRUM MICROWAVE GmbH • Hansastrasse 6 • 91126 Schwabach, Germany • Phone: (49)-9122-795-0 • Fax: (49)-9122-795-58
www.specwave.com

Digitally Tuned Oscillators (DTOs)

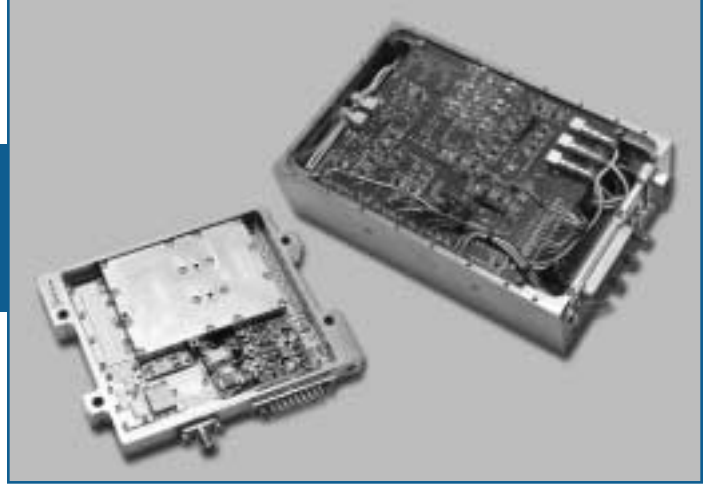

Spectrum Microwave offers a complete line of Digitally Tuned Oscillators (DTO). These custom designed assemblies consist of a select number of sub-band VCOs covering customer specific frequency ranges between 2GHz and 18GHz. The sub-band RF outputs are selectively switched to a common RF output port. Sufficient sub-band overlap insures full band coverage. Digital tuning is via a 16 bit, parallel input word. Several bits are used for selecting the desired sub-band and 12 to 14 bits are used for frequency tuning.

Silicon semiconductors are used to provide the best possible phase noise and post tuning drift performance. Hybrid MIC technology reduces overall package size and helps ensure overall system reliability. Fast settling time and excellent spectral purity make Spectrum DTOs ideal for simulators and other EW applications.

Key Features

- Fast settling time (< 1 msec)
- Wide frequency range (2-18 GHz)
- Low post tuning drift (<4 MHz @ 1 msec)
- Low spurious output (< -60 dBc)
- Harmonics (-25 dBc max)
- Excellent phase noise performance (<-65 dBc/Hz @ 100 kHz)
- Low residual FM (<-20 dBc @ 100 kHz)
- RF output power (+10 to +16 dBm)
- High reliability for military applications
- Output connectors (customer specified)

Optional Features

- Power output status indicator
- Phase locked module with phase lock indicator
- Internal heater for frequency stability over temperature
- Analog FM input

Block Diagram

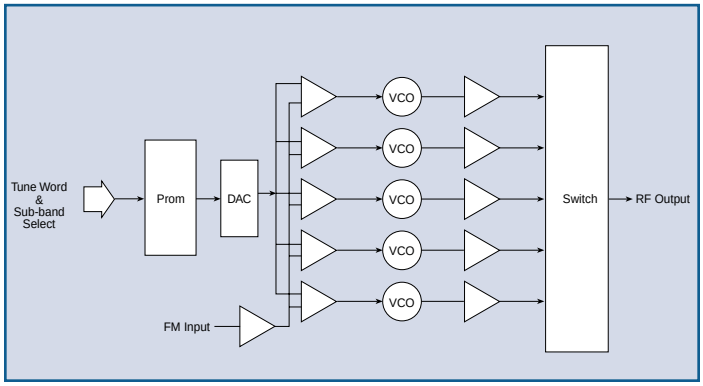

GPS Low Noise Amplifier

For GPS Applications

1227 MHz/1575 MHz

This series of Low Noise Amplifiers provides a filtered, low-noise gain solution ideal for applications where higher reliability is critical. These filtered low noise amplifiers are designed to reduce out-of-band interference while achieving high dynamic range.

A single ceramic filter or pair of diplexed ceramic filters with 3-pole responses select only the desired GPS signals while the low noise gain stage maintains the receiving system's sensitivity.

The LNA rejects undesired signals by at least 40 dB at 1050, 1410, and 1710 MHz. See the graphs on Page 79 for return loss, rejections, and insertion gain of a typical unit.

The preamplifier is powered by DC voltage applied to the center conductor of the output connector. Optionally, the unit can be powered through an external DC bias connector.

Features and Benefits

- Noise figure 1.6 dB typical
- Double-diplexed preamp filters
- Lightweight aluminum housing
- Dual band (L1 and L2) and single band (L1) performance
- Coaxial and external bias options
- Environmental sealing available
- Application specific packages available
- Suitable for new L2-C signals
- L5 configurations available upon request

Typical Performance Specifications

Frequency .....1575.42 MHz (L1)
1227.60 MHz (L2)

Bandwidth .....30 MHz min

Noise figure .....2.0 dB max
1.6 dB typ

VSWR .....1.5:1 max

Gain .....14, 26, 34 and 45 dB

Gain Flatness .....+/-0.5 dB

Rejection .....40 dB @ 1050, 1410, 1710 MHz

Bias .....Coaxial, Line or External Bias

Temperature Range .....-40°C to +71°C

All specifications above measured at 25°C

Dimensions and Connections

- Antenna port J1
- Receiver port J2
- External bias J3 (optional)
- SMA type female connectors
- 2.20"ø x 0.80"H excluding connectors
- Optional Bias cable is available to simplify testing and evaluation (P/N A020-0560)

Chassis is machined aluminum with a nickel plate finish.

Dimensions (inches)

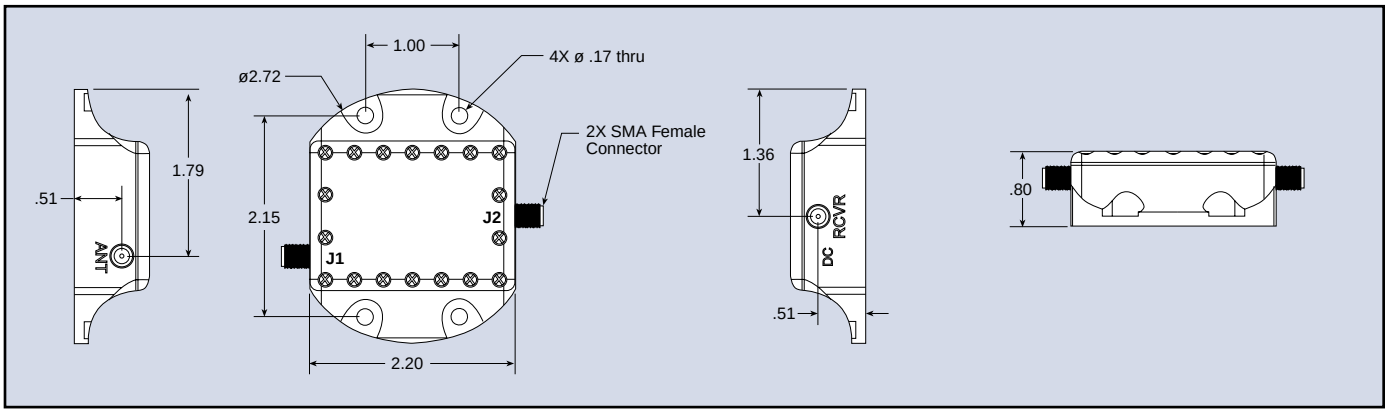

SPECTRUM MICROWAVE • 2144 Franklin Dr. N.E. • Palm Bay, FL • Phone: 888-553-7531 • Fax: 888-553-7532
SPECTRUM MICROWAVE GmbH • Hansastrasse 6 • 91126 Schwabach, Germany • Phone: (49)-9122-795-0 • Fax: (49)-9122-795-58
www.specwave.com

GPS Low Noise Amplifier

Block Diagram (L1/L2)

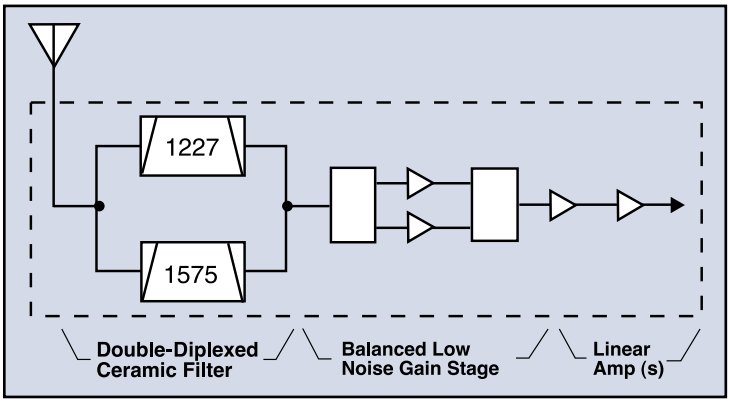

Noise Figures (L1)

GPS Band	Freq (MHz)	NF (dB)
L1	1565	1.60
	1575	1.60
	1585	1.60

Noise Figures (L1/L2)

GPS Band	Freq (MHz)	NF (dB)
L2	1217	1.53
	1227	1.44
	1237	1.35
L1	1565	1.58
	1575	1.60
	1585	1.48

Amplifier Gain (L1)

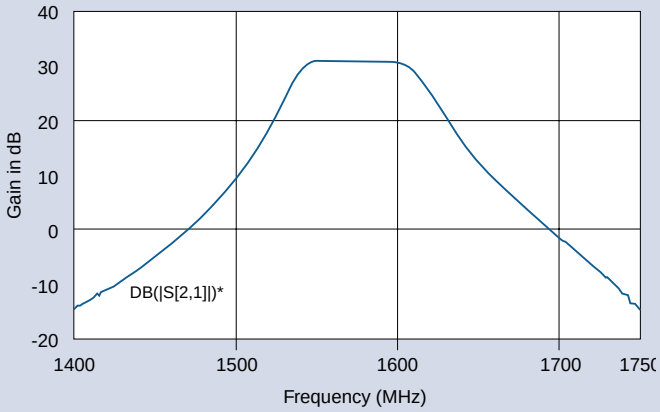

Return Loss (L1)

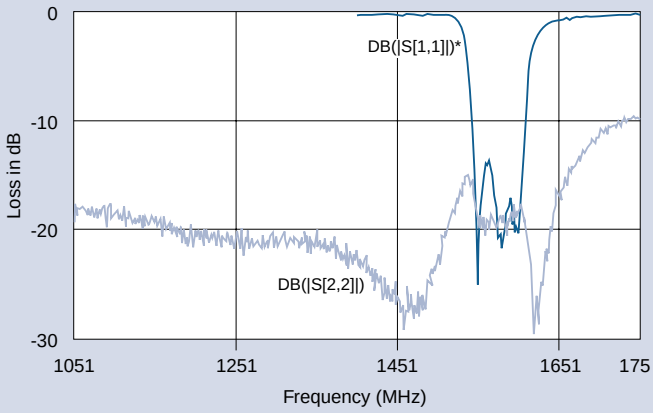

Amplifier Gain (L1/L2)

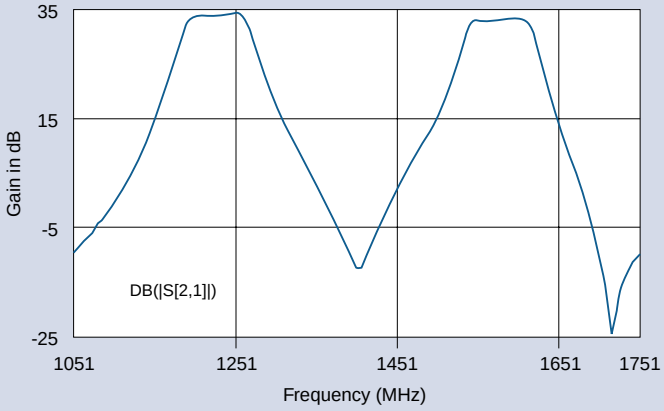

Return Loss (L1/L2)

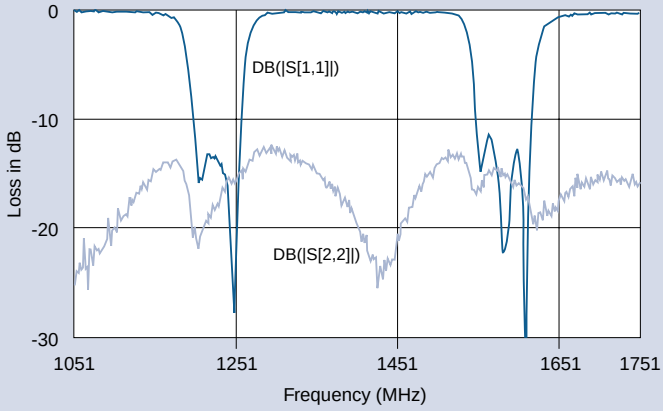

GPS Low Noise Amplifier

Ordering Information (L1)

Part Number	Gain	Noise Figure (max)	Power	Bias
310-024103-021	14 dB+/-2.0 dB	2.0 dB	5-16 VDC	Ext Bias, MR01
310-024105-011	26 dB+/-2.0 dB	2.0 dB	5-16 VDC	Coaxial Bias
310-024105-021	26 dB+/-2.0 dB	2.0 dB	5-16 VDC	Ext Bias, MR01
310-024107-021	34 dB+/-2.0 dB	2.0 dB	5-16 VDC	Ext Bias, MR01
310-024109-011	45 dB+/-2.0 dB	2.0 dB	5-16 VDC	Coaxial Bias

Note: See outline drawing on page 78 for standard package dimensions.

Ordering Information (L1/L2)

Part Number	Gain	Noise Figure (max)	Power	Bias
310-025103-011	14 dB+/-2.0 dB	2.0 dB	5-16 VDC	Coaxial Bias
310-025103-012	14 dB+/-2.0 dB	2.0 dB	16-32 VDC	Coaxial Bias
310-025103-021	14 dB+/-2.0 dB	2.0 dB	5-16 VDC	Ext Bias, MR01
310-025103-022	14 dB+/-2.0 dB	2.0 dB	16-32 VDC	Ext Bias, MR01
310-025105-011	26 dB+/-2.0 dB	2.0 dB	5-16 VDC	Coaxial Bias
310-025105-012	26 dB+/-2.0 dB	2.0 dB	16-32 VDC	Coaxial Bias
310-025105-021	26 dB+/-2.0 dB	2.0 dB	5-16 VDC	Ext Bias, MR01
310-025105-022	26 dB+/-2.0 dB	2.0 dB	16-32 VDC	Ext Bias, MR01
310-025107-011	34 dB+/-2.0 dB	2.0 dB	5-16 VDC	Coaxial Bias
310-025107-012	34 dB+/-2.0 dB	2.0 dB	16-32 VDC	Coaxial Bias
310-025107-021	34 dB+/-2.0 dB	2.0 dB	5-16 VDC	Ext Bias, MR01
310-025107-022	34 dB+/-2.0 dB	2.0 dB	16-32 VDC	Ext Bias, MR01
310-025109-011	45 dB+/-2.0 dB	2.0 dB	5-16 VDC	Coaxial Bias
310-025109-012	45 dB+/-2.0 dB	2.0 dB	16-32 VDC	Coaxial Bias
310-025109-021	45 dB+/-2.0 dB	2.0 dB	5-16 VDC	Ext Bias, MR01
310-025109-022	45 dB+/-2.0 dB	2.0 dB	16-32 VDC	Ext Bias, MR01

Note: See outline drawing on page 78 for standard package dimensions.
S-parameters for this model are available on our web site.
LNA parameters include noise data.

SPECTRUM MICROWAVE • 2144 Franklin Dr. N.E. • Palm Bay, FL • Phone: 888-553-7531 • Fax: 888-553-7532
SPECTRUM MICROWAVE GmbH • Hansastrasse 6 • 91126 Schwabach, Germany • Phone: (49)-9122-795-0 • Fax: (49)-9122-795-58
www.specwave.com

Harmonic Multiplier

100 to 2600 MHz Multiplier

The 310-027023-01 Harmonic Multiplier provides the system designer with a compact, low phase noise building block for Reference Oscillator multiplication applications.

A linear amplifier drives a step recovery diode thereby multiplying an input 100 MHz clock signal by a factor of 26. A pair of 3-pole ceramic Bandpass filters and a pair of linear driver amplifiers improves the spurious response.

This unit exhibits very little degradation of input reference signals, multiplying to the desired output frequency while only degrading the input phase noise performance by 30 dB. Please consult the factory for other available configurations.

Features

- Low Spurious -60 dBc to 6 GHz max
- Buffered Input
- Low Phase noise floor -130 dBc/Hz at 10 kHz
- Lightweight aluminum housing
- SMP style connectors
- Wide operating temperature range
- Integral voltage regulation
- Conduction cooled

Dimensions and Connections

LO Input	J1
LO Output #1	J2

5.80" L x 2.00" W x 0.41" H excluding connectors
Chassis is machined aluminum with a silver plate finish and is non-hermetic.

Typical Performance Characteristics

Input Frequency ..... 100 MHz
Input Level ..... +10 dBm +/-0.1 dBm
Output Frequency ..... 2600 MHz
Output Level ..... +17 dBm +/-2 dBm
VSWR 2.0:1
Spurious ..... 60 dBc (to 6 GHz)
Phase Noise Degradation ..... 1.7 dB
(above 28.3 dB ideal)
DC Power ..... +12V @ 500 mA typ
Temperature Range ..... -40°C to +85°C
Weight ..... 4.8 oz max
All specifications above measured at 25°C

Dimensions

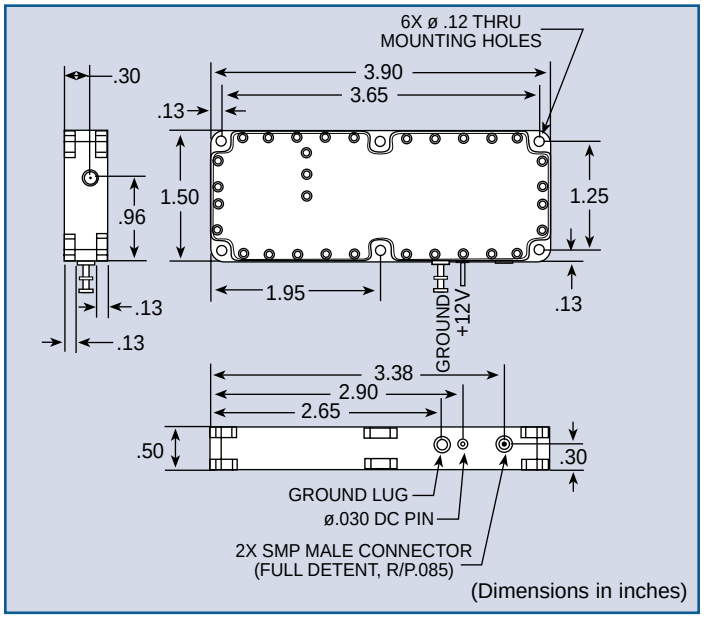

Harmonic Multiplier

Figure 1

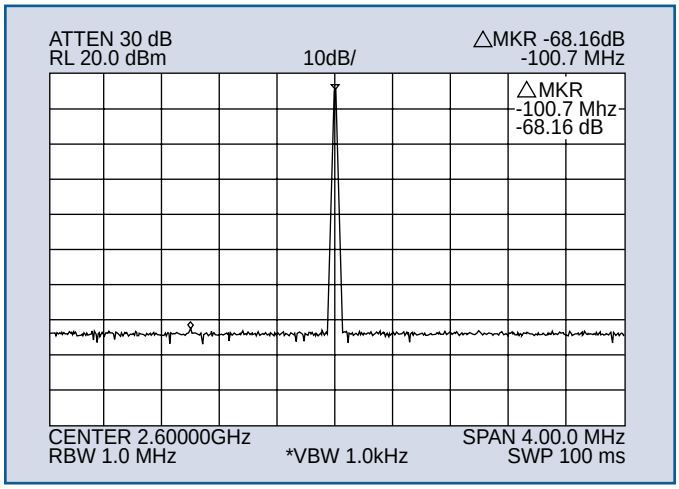

Multiplier Spectral Purity (Close Spectrum @ 25°C)

Figure 2

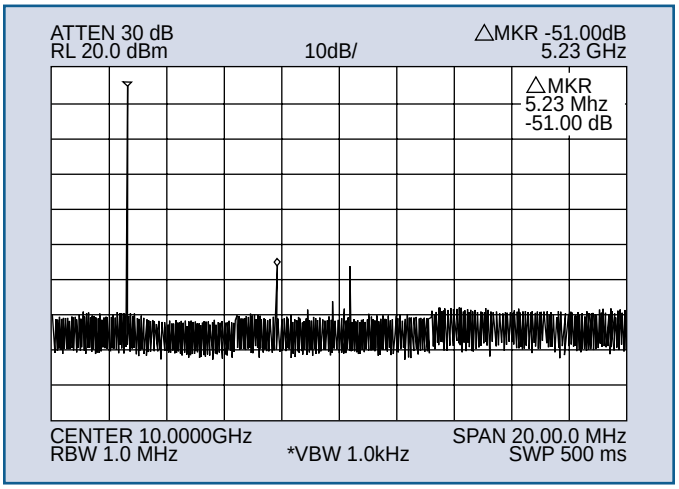

Multiplier Spectral Purity (Wide Spectrum @ 25°C)

Figure 3

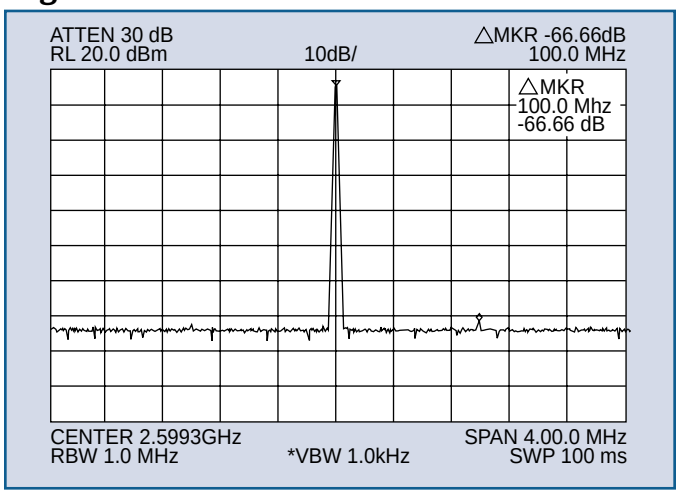

Multiplier Spectral Purity (Close Spectrum @ -40°C)

Figure 4

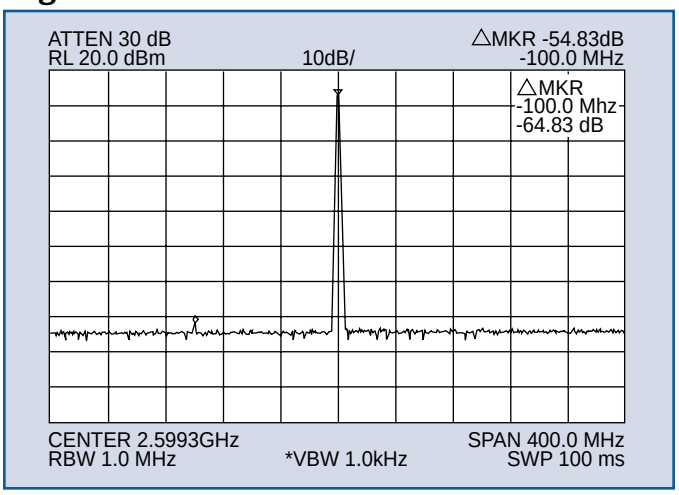

Multiplier Spectral Purity (Close Spectrum @ +85°C)

Block Diagram

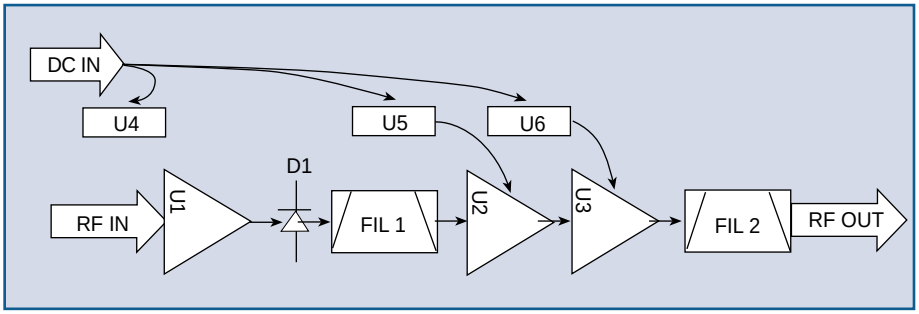

SPECTRUM MICROWAVE • 2144 Franklin Dr. N.E. • Palm Bay, FL • Phone: 888-553-7531 • Fax: 888-553-7532
SPECTRUM MICROWAVE GmbH • Hansastrasse 6 • 91126 Schwabach, Germany • Phone: (49)-9122-795-0 • Fax: (49)-9122-795-58
www.specwave.com

Frequency Multipliers

Local Oscillator Divider

2.0 – 4.5 / 0.4 – 2.0 GHz prescaler

The 310-027015-001 LO divider provides the system designer with a compact, fast-switching building block for LO division applications.

Cascades of solid-state prescalers provide frequency division by a factor of 2, 4 or 8. Each of the prescaler chains is followed by a filter to improve the spurious response and an amplitude corrector to achieve flat frequency response. Operating band is selected using two band select control pins.

A NULL mode is available to disable the module's output. Solid-state MMIC switches provide high-speed selection of the desired operating band.

Features

- Low Spurious -60 dBc max
- 140 nanosecond switching speed
- High output drive level +10 dBm
- Aluminum housing
- SMP style connectors
- Div 2, Div 4, and Div 8 Modes
- Null output mode

Dimensions and Connections

LO Input J1
LO Output J2
2.00" L x 1.50" W x 0.45" H excluding connectors

Typical Performance Characteristics

Input Frequency ..... 2.0 - 4.5 GHz
Input Level ..... +4 dBm +/-2 dBm
Output Frequency ..... 0.4 - 2.0 GHz
Output Level ..... +10 dBm +/-2 dBm
Input VSWR ..... 1.5:1 max
Switching Speed ..... 140 nsec max
Phase Noise Improvement ..... 6 dB min
DC Power ..... +5V@280 mA typ
Temperature Range ..... 0°C to +75°C
Weight ..... 1.2 oz
All specifications above measured at 25°C

Dimensions

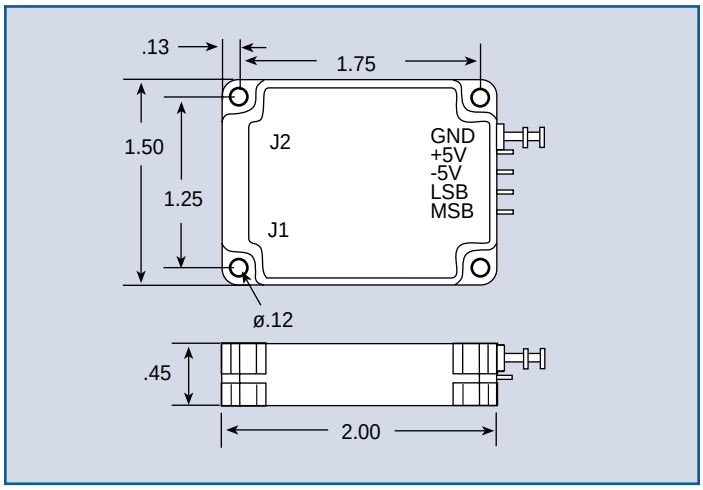

Frequency Multipliers

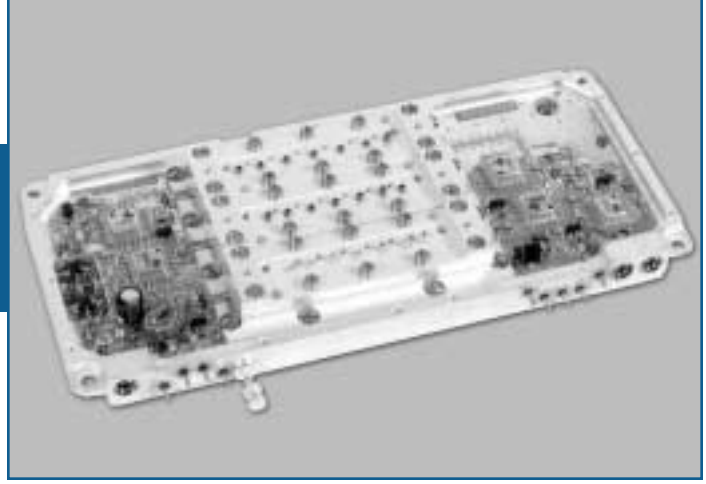

Local Oscillator Doubler

4.5 – 9.0 GHz
9.0 – 18.0 GHz

The 310-027014-001 Mid-Band multiplier provides the system designer with a compact, fast-switching building block for LO multiplication applications.

An internal solid-state multiplier provides frequency multiplication by a factor of 2. Three selective internal bandpass filters improve the spurious response. Operating band is selected using two band select control pins.

An integral 2-way output switch allows routing of the multiplied input LO signal to other modules based upon the state of an output control line. A NULL mode is available to disable the module's output.

Features

- Low Spurious -60 dBc max
- Fast 110 nanosecond switching speed
- High output drive level +10 dBm
- Aluminum housing
- SMP style connectors
- 2 Programmable outputs
- Null output mode

Dimensions and Connections

LO Input J1
LO Output #1 J2
LO Output #2 J3
5.00" L x 2.20" W x 0.55" H excluding connectors

Typical Performance Characteristics

Input Frequency ..... 2.25 - 4.5 GHz
Input Level ..... +4 dBm +/-2 dBm
Output Frequency ..... 4.5 - 9.0 GHz
Output Level ..... +10 dBm +/-2 dBm
Input VSWR ..... 1.5:1 max
Switching Speed ..... 110 nsec max
Phase Noise Degradation ..... 7 dB typ
DC Power ..... +5V@260 mA typ
-5V@10 mA typ
Temperature Range ..... 0°C to +75°C
Weight ..... 10.5 oz
All specifications above measured at 25°C

Dimensions

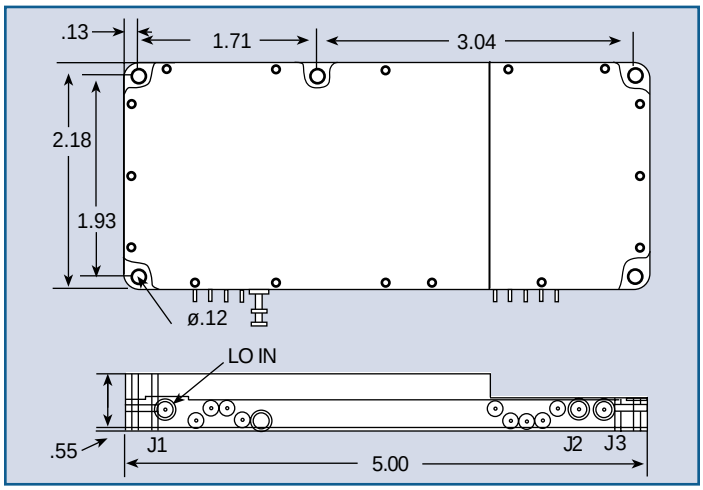

SPECTRUM MICROWAVE • 2144 Franklin Dr. N.E. • Palm Bay, FL • Phone: 888-553-7531 • Fax: 888-553-7532
SPECTRUM MICROWAVE GmbH • Hansastrasse 6 • 91126 Schwabach, Germany • Phone: (49)-9122-795-0 • Fax: (49)-9122-795-58
www.specwave.com

Frequency Multipliers

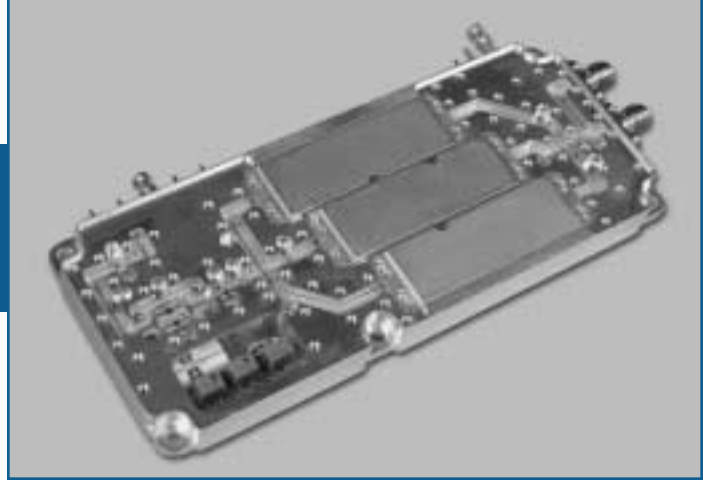

Local Oscillator Doubler

4.5 – 9.0 GHz
9.0 – 18.0 GHz

The 310-027004-002 High-Band LO Multiplier provides the system designer with a compact, fast-switching building block for LO multiplication applications.

An internal solid-state multiplier provides frequency multiplication by a factor of 2. Three selective internal bandpass filters improve the spurious response. Operating band is selected using two band select control pins.

A NULL mode is available to disable the module's output. Solid-state PIN diode switches provide high-speed selection of the desired operating band. An auxiliary sample port allows external signal monitoring.

Features

- Low Spurious -60 dBc max
- Fast 190 nanosecond switching speed
- High output drive level +7 dBm
- Aluminum housing
- SMPstyle connectors
- Three-Band functionality
- Null output mode

Dimensions and Connections

LO Input J1
LO Output J2
LO Sample J3
4.80" L x 1.98" W x 0.43" H excluding connectors

Typical Performance Characteristics

Input Frequency ..... 4.5 - 9.0 GHz
Input Level ..... +10 dBm +/-2 dBm
Output Frequency ..... 9.0 - 18.0 GHz
Output Level ..... +8 dBm +/-2 dBm
Input VSWR ..... 1.5:1 max
Switching Speed ..... 190 nsec max
Phase Noise Degradation ..... 7 dB max
DC Power ..... +5V@250 mA typ
-5V@30 mA typ
Temperature Range ..... 0°C to +75°C
Weight ..... 7.5 oz
All specifications above measured at 25°C

Dimensions

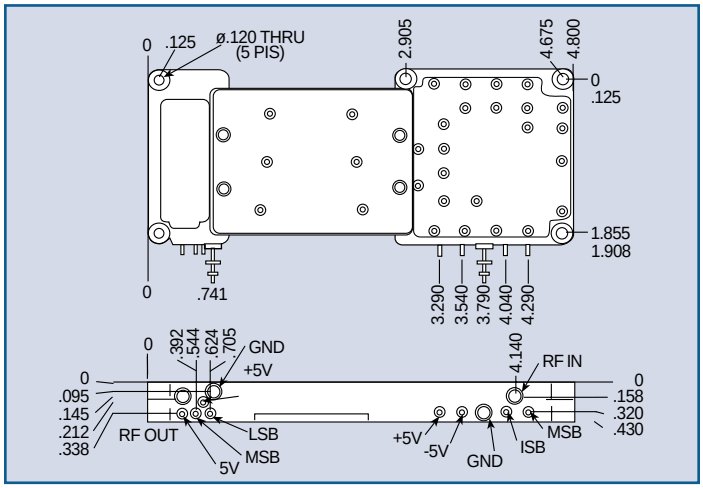

Frequency Multipliers

Frequency Multipliers

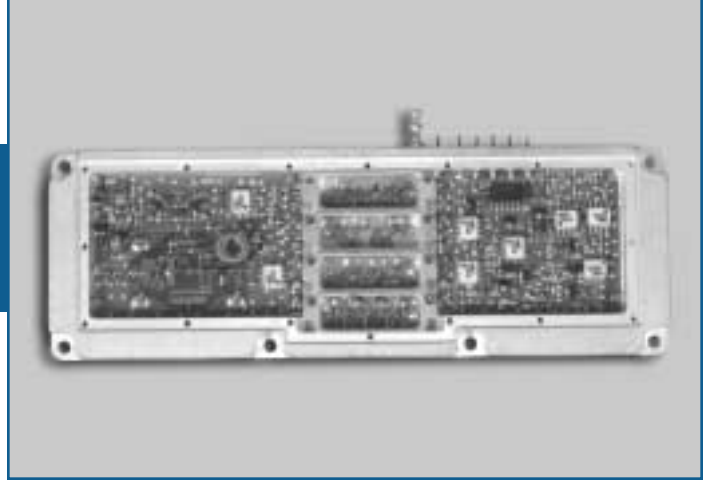

Local Oscillator Doubler/Tripler

1.0-1.5 GHz
2.0-4.5 GHz

The 310-027013-001 LO Multiplier provides the system designer with a compact, fast-switching building block for Local Oscillator multiplication applications.

A pair of internal solid-state multipliers provides frequency multiplication by a factor of 2 or 3 depending upon the state of two band control lines. Internal four-channel bandpass filtering improves the spurious response.

An integral 3-way output switch routes the multiplied input LO signal to other modules based upon the states of two output control lines. A NULL mode is available to disable the module's output.

Features

- Low Spurious -67 dBc max
- Fast 90 nanosecond switching speed
- Programmable X2 and X3 Multiplication
- Aluminum housing
- SMP style connectors
- 3 Programmable outputs
- Null output mode

Dimensions and Connections

LO Input	J1
LO Output #1	J2
LO Output #2	J3
LO Output #3	J4

5.80" L x 2.00" W x 0.41" H excluding connectors
Chassis is machined aluminum with a silver plate finish and is non-hermetic.

Typical Performance Characteristics

Input Frequency ..... 1.0-1.5 GHz
Input Level ..... +7.5 dBm +/-2 dBm
Output Frequency ..... 2.0 - 4.5 GHz
Output Level ..... +5 dBm +/-1.5 dBm
Input VSWR ..... 1.5:1 max
Switching Speed ..... 90 nsec max
Phase Noise Degradation ..... 7 dB (max in X2 mode)
11dB (max in X3 mode)
DC Power ..... +5V@300 mA typ
-5V@10 mA typ
Temperature Range ..... 0°C to +75°C
Weight ..... 4.5 oz
All specifications above measured at 25°C

Dimensions

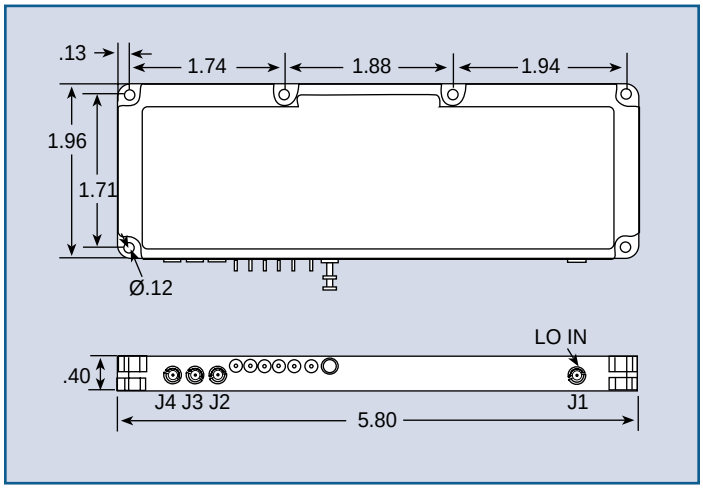

SPECTRUM MICROWAVE • 2144 Franklin Dr. N.E. • Palm Bay, FL • Phone: 888-553-7531 • Fax: 888-553-7532
SPECTRUM MICROWAVE GmbH • Hansastrasse 6 • 91126 Schwabach, Germany • Phone: (49)-9122-795-0 • Fax: (49)-9122-795-58
www.specwave.com

Frequency Multipliers

Channel 1

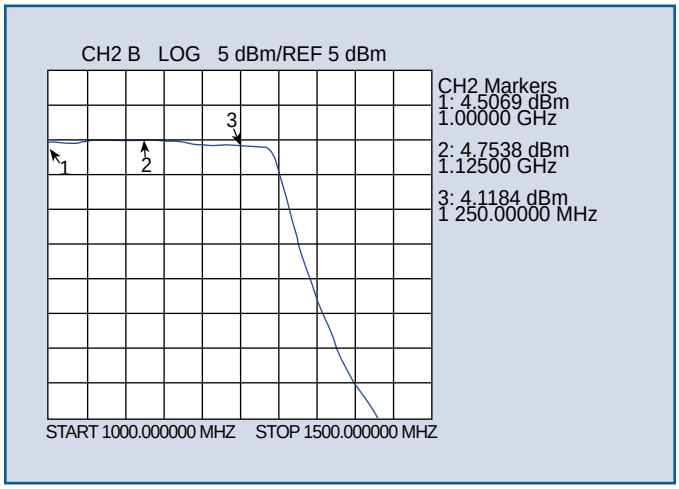

Doubler Output Power Flatness (2000-2500 MHz Output)

Channel 2

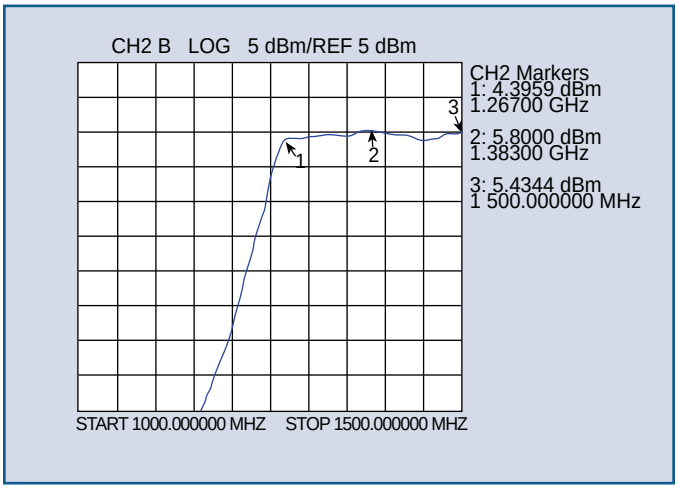

Doubler Output Power Flatness (2500-3000 MHz Output)

Channel 3

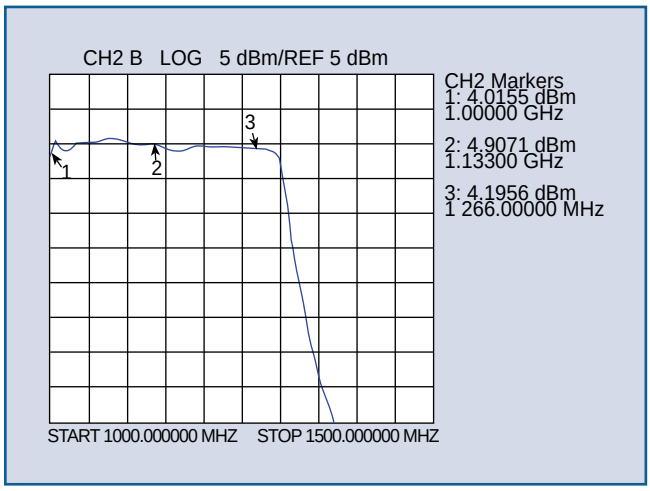

Tripler Output Power Flatness (3000-3800 MHz Output)

Channel 4

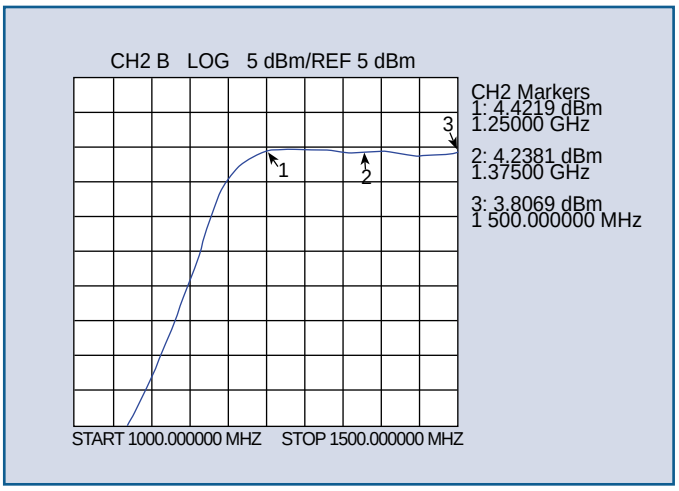

Tripler Output Power Flatness (3800-4500 MHz Output)

Block Diagram

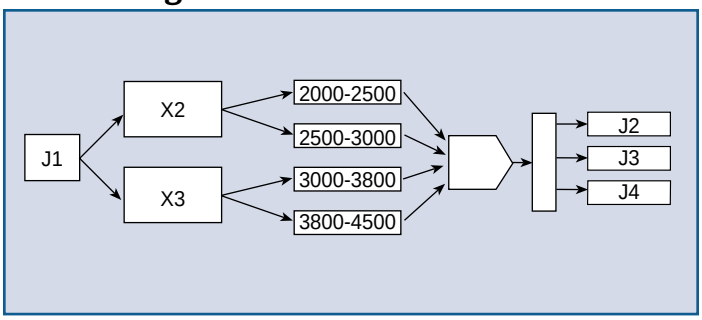

Synthesizers

This programmable signal source is completely self-contained with an internal TCXO reference. The synthesizer can be either parallel loaded through the TTL control port or set up to power on at a predetermined frequency. This source is suitable for use in dedicated test setups or as a component of a production system.

Features

- 1 MHz steps
- DDS driven direct synthesis
- <75 Watts
- VME compatible
- Power ≈ +10 dBm
- Low phase noise
- Low spurious (-65 dBc max)
- Parallel TTL control
- 0°C to 70°C operating range
- Shielded design
- Internal frequency reference

Dimensions and Connections

10.0"L x 6.5"W x 5.0"H

Typical Performance Characteristics

Frequency ..... 10 MHz to 18 GHz

Frequency Resolution..... 1 MHz

Power Output ..... +10 dBm +/-3 dB

RF Output Impedance ..... 50 ohm

RF Output Accuracy..... <+/-25ppm max.+/-10ppm typ

RF Output SSB Phase Noise..... <1.2 degrees RMS

Phase Noise @10 kHz Offset ..... -82 dBc/Hz

Phase Noise @100 kHz Offset ..... -90 dBc/Hz

Phase Noise @1 MHz Offset..... -100 dBc/Hz

Phase Noise @10 MHz Offset..... -122 dBc/Hz
(Integrated from 10 kHz to 10 MHz)

Harmonics ..... <-15 dBc

Spurious (offset>10MHz) ..... <-55 dBc

Spurious (offset<10MHz) .....-65 dBc typ

Switching speed (to within 0.1 dB radian of final frequency)
..... 1µ sec max

Reference Output Frequency..... 100 MHz

Reference Output Amplitude..... +7 dBm +/-1 dB

Control..... 15-bit TTL

Power Supply ..... +8V@5.0A, -8V@1.0A, +12V@1.68A

All specifications above measured at 25°C

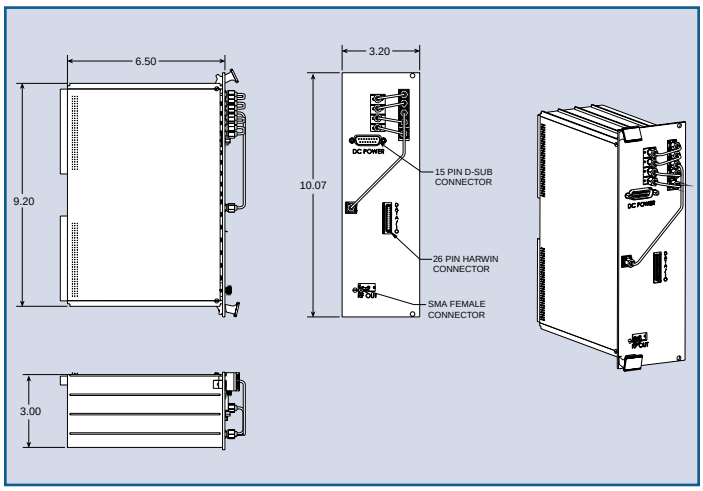

SPECTRUM MICROWAVE • 2144 Franklin Dr. N.E. • Palm Bay, FL • Phone: 888-553-7531 • Fax: 888-553-7532
SPECTRUM MICROWAVE GmbH • Hansastrasse 6 • 91126 Schwabach, Germany • Phone: (49)-9122-795-0 • Fax: (49)-9122-795-58
www.specwave.com

Patch Antenna Elements & Assemblies

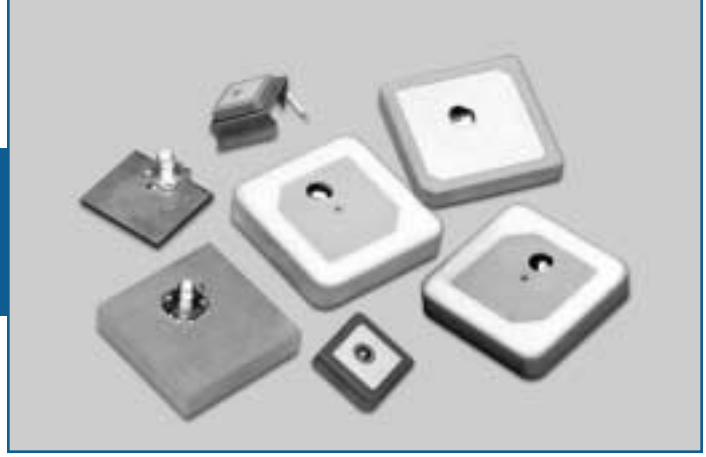

As wireless communications become ever more pervasive in our daily lives, engineers are trying to design products that add functionality and communications to an increasing assortment of devices. GPS is one of the more well known applications leveraging satellite communication. Increasingly satellite radio has expanded its penetration and will continue to do so in the coming years. Bluetooth and short range wireless applications such as RFID continue to grow and are poised to change the way business perform their operations.

In the near future, we anticipate an explosion of sensor systems that will wirelessly enable customers and provide information anywhere at any time. Engineers designing these systems consistently look for elegant antenna solutions that are invisible to the customer are cost effective to utilize. Patch antennas are increasingly selected as the antenna to use in GPS, Inmarsat, Globalstar, Satellite Radio and ISM applications.

Applications

- Satellite Radio
- GPS
- Satellite Modems
- Bluetooth
- Wireless LANs

Features

- Temperature stable (-40°C to +105°C)
- Low return loss
- Uniform dielectric constant
- Wide frequency range (900 MHz to 5.8 GHz)
- Offset single-point feeding method
- Design flexibility
  - 28 mm x 28 mm x 6 mm
  - 25 mm x 25 mm x 4 mm
  - 18 mm x 18 mm x 4 mm
  - 16 mm diameter x 6 mm
  - 13 mm x 13 mm x 3 mm
- Custom designs available
- Silver plated electrode and probe
- Surface mount
- 50 Ohm impedance

Custom Part Number Examples (Typical part numbers, consult factory for additional designs)

Application	Part #	Polarization	Center Frequency (MHz)	2:1 VSWR Bandwidth (MHz)	Gain (dB)	Tested Ground Plane (mm)	Reference Outlines
GPS	PA25-1575-008SA	RHCP	1575	20	2.5	35X35	B
GPS	PA25-1579-008SA	RHCP	1579	20	2.5	35X35	B
GPS-military	PA25-1227-008SA	RHCP	1227	20	0.0	60X60	B
GPS	PA18-1580-010SA	RHCP	1580	15	0.0	50X50	C
GPS	PA13-1580-005SA	RHCP	1580	8	2.5	30X30	D
Globalstar	PA25-1615-025SA	LHCP	1615	125	3.0	70X70	B
Globalstar	PA37-2492-050SA	LHCP	2492	150	4.0	40X40	
Iridium	PA25-1621-025SA	RHCP	1621	25	4.0	60X60	B
Inmarsat	PA25-1542-025SA	RHCP	1542	25	4.0	60X60	B
Inmarsat	PA25-1643-025SA	RHCP	1643	25	4.0	60X60	B
Inmarsat	PA45-1592-175SA	RHCP	1592	175	5.0	60X60	F
Satellite Radio	PA20-2338-025SA	LHCP	2338	60	4.0	35X35	E
Satellite Radio	PA28-2345-025SA	LHCP	2345	60	4.0	45X45	A
Satellite Radio	PA25-2350-025SA	LHCP	2350	60	4.0	45X45	B
ISM	PA37-2450-150SA	RHCP or LHCP	2450	150	4.0	40X40	

Patch Antenna Elements & Assemblies

Reference Outlines

Figure A

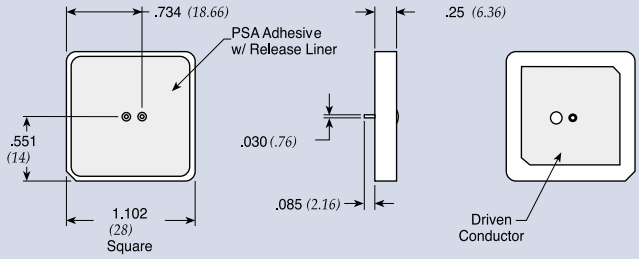

Figure B

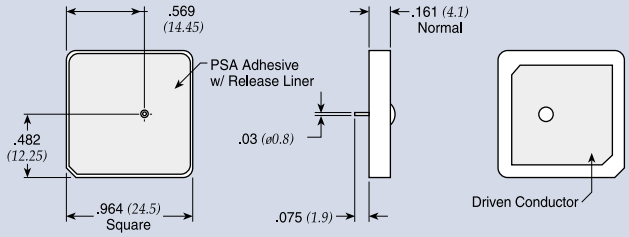

Figure C

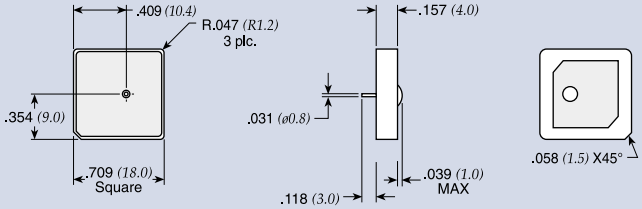

Figure D

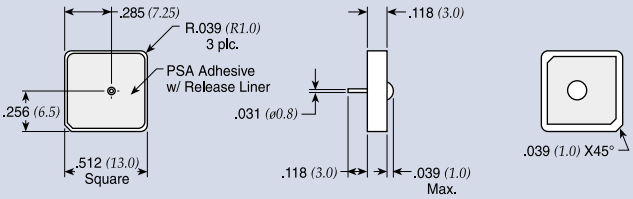

Figure E

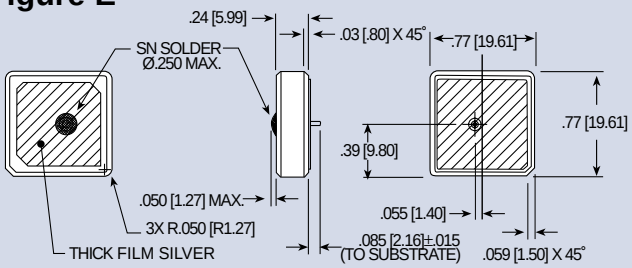

Figure F

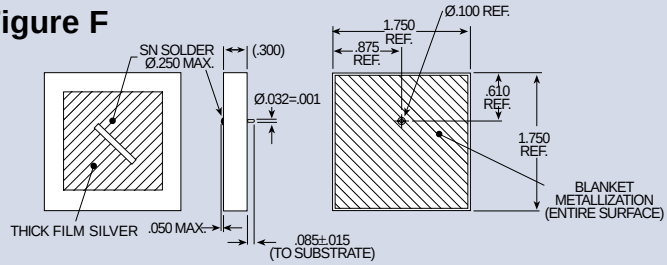

Dimensions in inches (mm)

Note: See sales drawing for detailed specifications on each part.

SPECTRUM MICROWAVE • 2144 Franklin Dr. N.E. • Palm Bay, FL • Phone: 888-553-7531 • Fax: 888-553-7532
SPECTRUM MICROWAVE GmbH • Hansastrasse 6 • 91126 Schwabach, Germany • Phone: (49)-9122-795-0 • Fax: (49)-9122-795-58
www.specwave.com

Patch Antenna Elements & Assemblies

Ground Plane:
During the design process, consideration must be given to the size and configuration of the ground plane. The ground plane has substantial effects on the performance of the antenna. These effects include frequency shift, gain, axial ratio and radiation pattern.

Element Size:
The amount of space available for the antenna element determines not only the material required but also the related performance that can be expected. The element size relates to the material that will be selected, the shape of the element, and the metallization pattern. Each of these has a substantial effect on electrical performance.

Assembly Configuration:
The final assembly configuration also affects element performance. The position of other components, etc. affects the overall performance of the element.

The items mentioned above are areas in which Spectrum Microwave's engineering staff can assist in developing an optimized antenna element to fit your needs.

System Solutions

- Design support for your entire system to help optimize not only antenna performance but system performance.
- Our engineering staff will assist in selecting optimized components to insure maximum performance and reliability.
- We offer a wide range of related products to support antenna performance including monoblock and discrete bandpass filters, duplexers and resonators.
- We also offer value-added services such as PCB/ground plane assemblies, bracket assemblies and connectorized assemblies.

Here are some key relationships in graphical form outlining the effects of the mechanical changes on electrical performances.

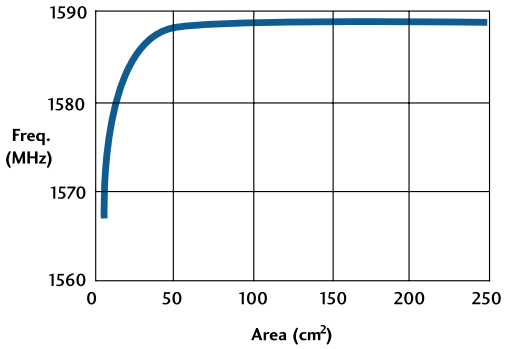

Center frequency vs. ground plane size (25 mm patch)

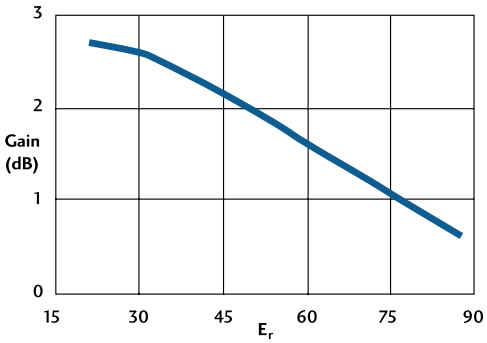

Gain vs. Dielectric Constant (f=1575 MHz)

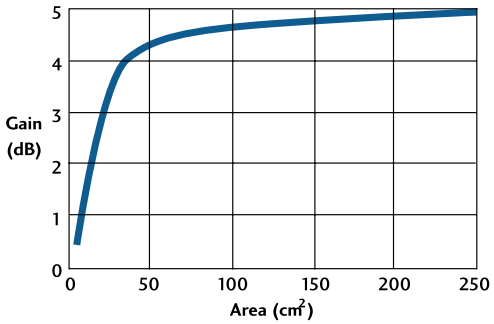

Gain vs. ground plane size (25 mm patch)

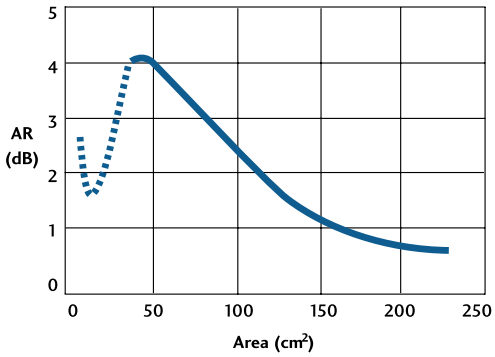

Axial Ratio vs. ground plane size
(25 mm patch optimized for 35 mm ground plane)

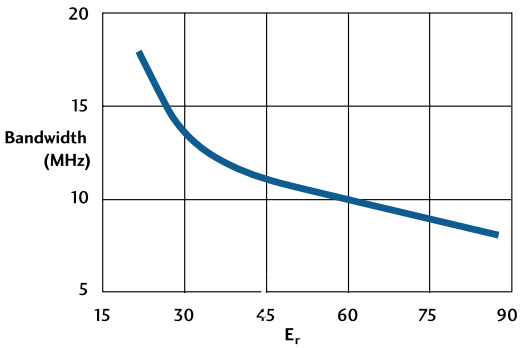

10 dB return loss bandwidth vs. dielectric constant (f = 1575 MHz).

SPECTRUM MICROWAVE INC.
A Spectrum Control Business

spectrum microwave

Lumped element filters
Cavity filters
Bandpass filters & duplexers
Tubular & waveguide filters
Tower mounted amplifiers
Coaxial resonators
Patch antennas & assemblies
Switchable filter bank assemblies
Hybrid, modular & GPS low noise amplifiers
Local oscillator doublers
Microwave synthesizers
Couplers
Integrated microwave sub-assemblies
Power amplifiers
RF mixers
Voltage controlled oscillators (VCOs)
Dielectric resonator oscillators (DROs)
www.specwave.com

signal & power integrity products

Ferrite beads & inductors
Surface mount filters
Discrete EMI filters
Filter plates
Filter connectors
Gaskets & shielding
Ceramic capacitors
Single line filters
Filtered terminal blocks
Power entry & power line filters
Military/multisection filters
EMC testing
www.specemc.com

power management systems

AC/DC power distribution units
& remote reboot power management systems
Circuit protection
Custom assemblies
Power strips
www.specpower.com

sales offices

AMERICAS
2144 Franklin Dr. N.E.
Palm Bay, Florida 32905
Phone: 888-553-7531
Fax: 888-553-7532

EUROPE
Spectrum Control GmbH
Hansastrasse 6
91126 Schwabach, Germany
Phone: (49)-9122-795-0
Fax: (49)-9122-795-58

ASIA/PACIFIC RIM
Spectrum Control Electronics
(Dong Guan) Co. LTD.
2/F, No. 37 South Gong Ye Da Dao
Qiatou Town, Dong Guan Municipality
China
Phone: (011)-86-769-33-7791
Fax: (011)-86-769-33-7760

SPECTRUM CONTROL INC.

corporate headquarters

8031 Avonia Road
Fairview, Pennsylvania 16415
Phone: 814-474-2207
Fax: 814-474-2208
www.spectrumcontrol.com

Spectrum Control, Inc. reserves the right to alter the specifications provided in this publication. Consult factory for current specifications.

ISO 9001 CERTIFIED

To learn more about
Spectrum Microwave,
call **888-553-7531**
or visit us online @
www.specwave.com

AHA 7/05 5M 27-0027-0090 ©2005 Spectrum Control, Inc. Printed in U.S.A.

Mouser Electronics

Authorized Distributor

Click to View Pricing, Inventory, Delivery & Lifecycle Information:

API Technologies:

BPF3-0439-005LA