When it **Absolutely Must** Connect

BR-310AC
High Performance Gigabit Ethernet to 802.11ac WLAN Bridge Including 802.1X Enterprise Security

Easily Convert Wired LAN Devices into Wireless LAN Devices in Office Environments

The BR-310AC allows any Ethernet enabled device to join a secure, high-speed 802.11ac enterprise WLAN network. It is software transparent meaning no changes to drivers, management tools, or applications are needed. Ethernet devices can therefore be placed in locations where running cables is difficult or impossible.

Leveraging the Gigabit speeds of the built-in 3x3 MIMO 11ac WiFi radio, the BR-310AC can transmit large data files such as high-resolution images at very high data rates.

The BR-310AC supports IEEE802.1X authentication to guarantee enterprise-level security in office and business networks. It supports industry leading standards for authentication and encryption including WPA, WPA2, and most commonly used EAP types.

802.11ac for High-Speed Data Transfers

In addition to IEEE802.11a/b/g/n, the BR-310AC also supports IEEE802.11ac with a 3x3 MIMO radio for high-speed data transfers up to a theoretical maximum of 1.3 Gbps.

Furthermore, the bridge is dual band capable, i.e. compatible with both the 2.4GHz and the 5GHz frequency bands. The 2.4GHz band is well suited for penetrating obstacles, whereas the 5GHz is relatively insensitive to interference.

Having dual-band capability provides the flexibility to operate in the best possible performance in the given RF environment.

IEEE802.1X EAP Authentication Support

The BR-310AC supports IEEE802.1X authentication for the highest security combined with an authentication server.

It prevents prohibited network access by unauthorized devices.

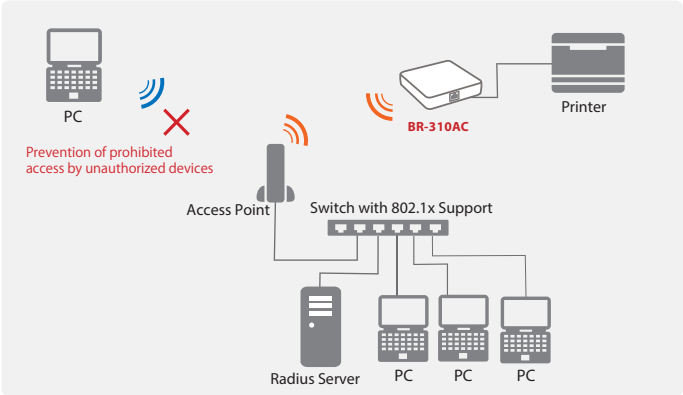

Single Client Mode & Multi Client Mode

Two modes of operation are available in the BR-310AC depending on the customer's application environment:

Single client mode is used for expansion of mobility of devices by connecting a wireless bridge with a wired LAN device.

Multi-client mode on the other hand has more economical advantages, since up to 16 devices can be joined in a wireless environment via a single BR-310AC and an optional network hub.

Single Client Mode

When operating in single client mode, a device that is connected with a LAN cable to the LAN connection of the wireless bridge BR-310AC can be joined into a WLAN network.

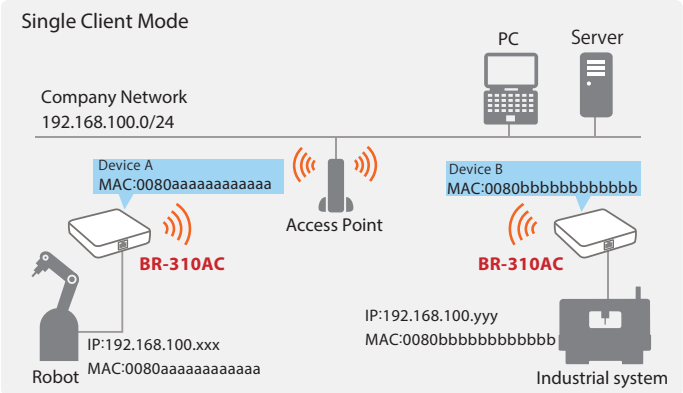

Here the MAC address of the device connected to the LAN port is used for wireless data exchange (MAC transparency).
The WLAN connection is immediately interrupted if the device connected to the LAN port is replaced with a different device during operation.

Multi Client Mode

When operating in multi client mode, a maximum of 16 wired LAN devices can be simultaneously connected by using a network hub. The LAN port of the network hub connects to the LAN port of the BR-310AC wireless bridge.

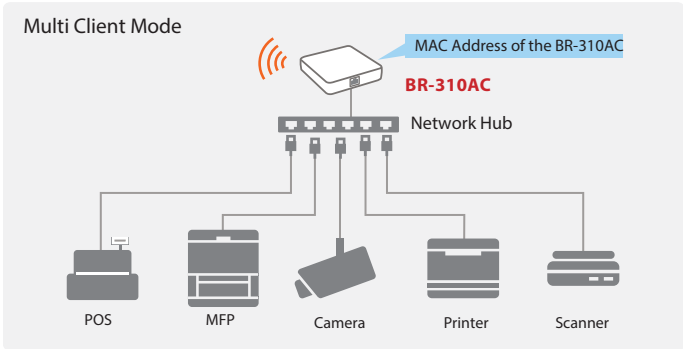

Multi client mode uses the MAC address of the BR-310AC for data exchange via the wireless LAN.

High Performance Gigabit Ethernet to 802.11ac WLAN Bridge Including 802.1X Enterprise Security

BR-310AC

Operation Log Saving Function

The BR-310AC has built-in storage for recording operating logs. User can record and log device behavior and data exchange with networks.

If performance degradation or interference occurs due to changes in the wireless environment, these logs can be quickly analyzed to determine the root cause and make improvements.

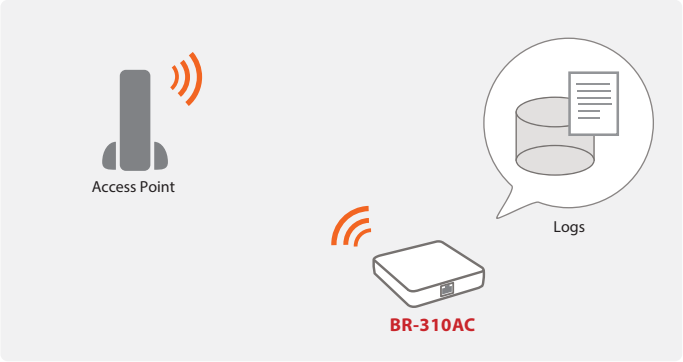

Device Management Software "AMC Manager®"

The BR-310AC wireless bridge is compatible with the optional device management software "AMC Manager®".

With this software, network administrators can execute the functions required for device management of Silex networking products from one point, for example monitor device status, configuration settings, update firmware, automatically record device operating logs and restart the devices.

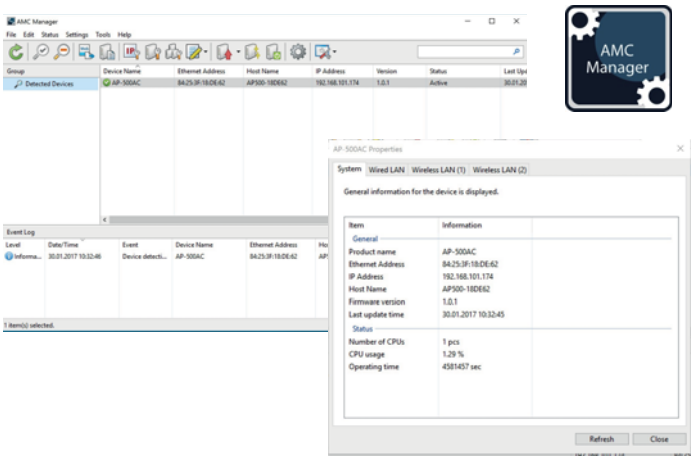

Specifications

Product name	BR-310AC
LAN	
Interface	RJ-45 x 1 Port
Standard	10BASE-T/100BASE-TX/1000BASE-T (auto. detection)
WLAN	
Standard	IEEE 802.11a/b/g/n/ac
Encryption	Open(None/64bit/128bit) Shared(64bit/128bit) WPA2-PSK(AES) WPA/WPA2-PSK Mixed(Auto) WPA2-Enterprise(AES) WPA/WPA2-Enterprise Mixed(Auto) 802.1x (EAP-TLS/EAP-TTLS/PEAP/LEAP/EAP-FAST) Use the device setting WPA/WPA2-PSK (Auto) or WPA/WPA2-EAP (Auto) if the security functions WPA-PSK (AES/TKIP) or WPA-Enterprise (AES/TKIP) are used in WLAN,
Channels	2.4GHz : 1～13ch 5GHz : 36～64ch, 100～140ch, 149～165ch
Antenna	Integrated antenna - 2,4- and 5-GHz-Band
Setup	Push button, PIN-Code
Device Interfaces	
Buttons	switching operating mode, factory default and WLAN
Others	
Storage conditions	Temperature：-10～50℃ Humidity：20～90%RF（non condensation）
Operating conditions	Temperature：0～40℃ Humidity：20～80%RF（non condensation）
Power Supply	6.5W（DC5V 1.3A）
Dimensions	130 mm × 100 mm × 26 mm
Weight	148g
Setup	Web browser, smart wireless settings, AMC Manager®
Enclosed Accessories	Main unit, AC adapter, rubber feet, LAN cable, operating manual, GPL inquiry sheet, guarantee card
Certification	VCCI Class B, FCC, Part 15, Subsection B, Class B, CE EN 55032, Class B, CE EN 301489-1/-17, RoHS compliant
Part Number US	BR-310AC-US

silex technology is a registered trademark of silex technology, Inc. Other product or brand names may be registered trademarks or trademarks of their respective owners. Technical information and specifications are subject to change without notice. © 2017 silex technology, Inc. All rights reserved.

silex global sales & support locations

USA Office
silex technology america, Inc.
+1-801-747-0656
U.S. toll free 866-765-8761
www.silexamerica.com
sales@silexamerica.com

Europe
silex technology europe, GmbH
+49-2151-65009-10
Germany toll free 0800-7453938
www.silexeurope.com
contact@silexeurope.com

Corporate Headquarters
silex technology, Inc.
+81-774-98-3781
www.silex.jp
support@silex.jp

ISO 9001 JQA-QMA2667 silex technology, Inc.

ISO 14001 JQA-EM3813 silex technology, Inc. Design & Manufacturing Center

PN: 141-20144-100
REV A. 20170322

Mouser Electronics

Authorized Distributor

Click to View Pricing, Inventory, Delivery & Lifecycle Information:

Silex Technology:
BR-310AC-US