Standard LCD Segment Drivers

BU9795AFV MAX 108 segments (SEG27×COM4)

●Features

- Integrated RAM for display data (DDRAM) : 27 × 4bit (Max 108 Segment)
- LCD drive output : 4 Common output, Max 27Segment output
- Integrated Buffer AMP for LCD driving
- Integrated Oscillator circuit
- No external components
- Low power consumption design

●Applications

- Telephone
- FAX
- Portable equipment (POS, ECR, PDA etc.)
- DSC
- DVC
- Car audio
- Home electrical appliance
- Meter equipment

etc.

●Key Specifications

- Supply Voltage Range: +2.5V to +5.5V
- Operating Temperature Range: -40°C to +85°C
- Max Segments: 108 Segments
- Display Duty: 1/4
- Bias: 1/2, 1/3 selectable
- Interface: 3wire serial interface

●Packages

W (Typ) x D (Typ) x H (Max)

SSOP-B40
13.60mm x 7.80mm x 2.00mm

●Typical Application Circuit

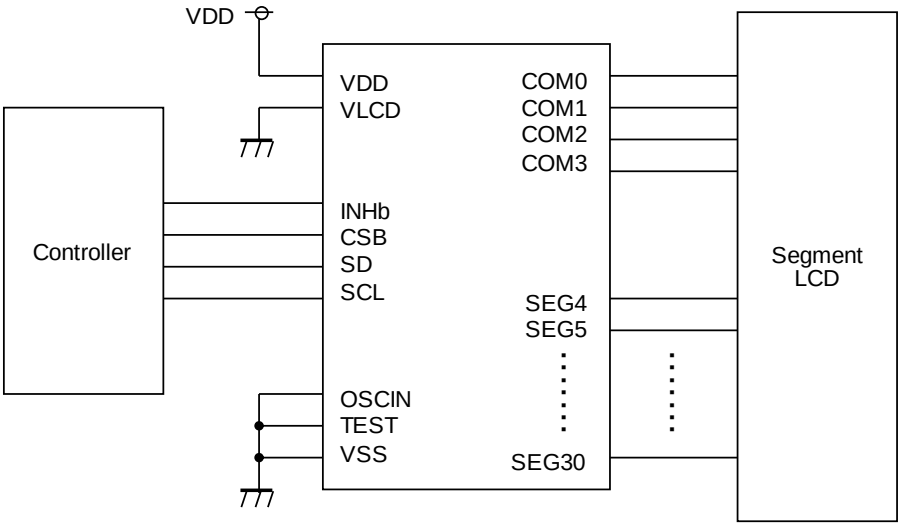

Internal oscillator circuit mode

Figure 1. Typical application circuit

○Product structure : Silicon monolithic integrated circuit ○This product has no designed protection against radioactive rays.

© 2013 ROHM Co., Ltd. All rights reserved.

●Block Diagrams / Pin Configurations / Pin Descriptions

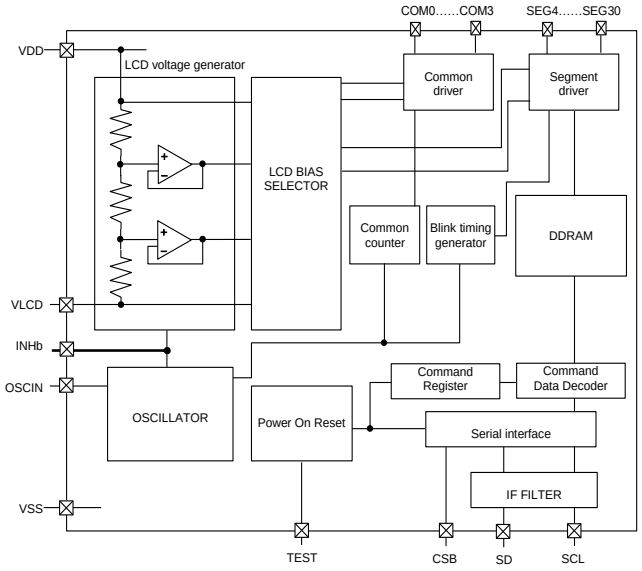

Figure 2. Block Diagram

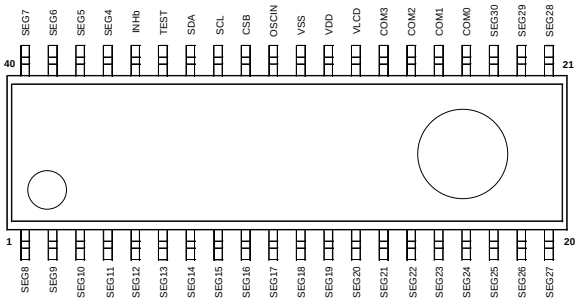

Figure 3. Pin Configuration (TOP VIEW)

Table 1 Pin Description

Pin name	Pin No.	I/O	Function
INHb	36	I	Input terminal for turn off display H : turn on display L : turn off display
TEST	35	I	Test input (ROHM use only) Must be connected to VSS
OSCIN	31	I	External clock input Ex clock and Int clock can be changed by command. Must be connected to VSS when using internal oscillation circuit.
SD	34	I	Serial data input
SCL	33	I	Serial data transfer clock
CSB	32	I	Chip select : ”L” active
VSS	30		GND
VDD	29		Power supply
VLCD	28	I	Power supply for LCD driving
SEG4 to SEG30	1 to 23, 37 to 40	O	SEGMENT output for LCD driving
COM0 to COM3	24 to 27	O	COMMON output for LCD driving

© 2013 ROHM Co., Ltd. All rights reserved.

●Absolute Maximum Ratings (VSS=0V)

Parameter	Symbol	Ratings	Unit	Remark
Power supply voltage1	VDD	-0.5 to +7.0	V	Power supply
Power supply voltage2	VLCD	-0.5 to VDD	V	LCD drive voltage
Power dissipation	Pd	0.7	W	When use more than Ta=25°C, subtract 7mW per degree (Package only)
Input voltage range	VIN	-0.5 to VDD+0.5	V	
Operational temperature range	Topr	-40 to +85	°C	
Storage temperature range	Tstg	-55 to +125	°C	

●Recommended Operating Ratings(Ta=-40°C to +85°C,VSS=0V)

Parameter	Symbol	Ratings			Unit	Remark
		Min.	Typ.	Max.		
Power Supply voltage1	VDD	2.5	-	5.5	V	Power supply
Power Supply voltage2	VLCD	0	-	VDD -2.4	V	LCD drive voltage

* Please use VDD-VLCD≥2.4V condition.

●Electrical Characteristics

DC Characteristics (VDD=2.5V to 5.5V, VSS=0V, Ta=-40°C to +85°C, unless otherwise specified)

Parameter		Symbol	Limits			Unit	Conditions
			MIN	TYP	MAX		
“H” level input voltage		VIH	0.7VDD	-	VDD	V	
“L” level input voltage		VIL	VSS	-	0.3VDD	V	
“H” level input current		IIH	-	-	1	µA	
“L” level input current		IIL	-1	-	-	µA	
LCD Driver on resistance	SEG	RON	-	3.5	-	kΩ	Iload=±10µA
	COM	RON	-	3.5	-	kΩ	
VLCD supply voltage		VLCD	0	-	VDD -2.4	V	VDD-VLCD≥2.5V
Standby current		Ist	-	-	5	µA	Display off, Oscillator off
Power consumption 1		IDD1	-	12.5	30	µA	VDD=3.3V, Ta=25°C, Power save mode1, FR=70Hz 1/3 bias, Frame inverse
Power consumption 2		IDD2	-	20	40	µA	VDD=3.3V, Ta=25°C, Normal mode, FR=80Hz 1/3 bias, Line inverse

© 2013 ROHM Co., Ltd. All rights reserved.

●**Electrical Characteristics - continued**

Oscillation Characteristics (VDD=2.5V to 5.5V,VSS=0V, Ta=-40°C to +85°C)

Parameter	Symbol	Limits			Unit	Conditions
		MIN	TYP	MAX		
Frame frequency	f_{CLK}	56	80	104	Hz	FR = 80Hz setting
Frame frequency1	f_{CLK1}	70	80	90	Hz	VDD=3.5V, 25°C

MPU interface Characteristics(VDD=2.5V to 5.5V,VSS=0V, Ta=-40°C to +85°C)

Parameter	Symbol	Limits			Unit	Conditions
		MIN	TYP	MAX		
Input rise time	tr	-	-	80	ns	
Input fall time	tf	-	-	80	ns	
SCL cycle time	tSCYC	400	-	-	ns	
“H” SCL pulse width	tSHW	100	-	-	ns	
“L” SCL pulse width	tSLW	100	-	-	ns	
SD setup time	tSDS	20	-	-	ns	
SD hold time	tSDH	50	-	-	ns	
CSB setup time	tCSS	50	-	-	ns	
CSB hold time	tCSH	50	-	-	ns	
“H” CSB pulse width	tCHW	50	-	-	ns	

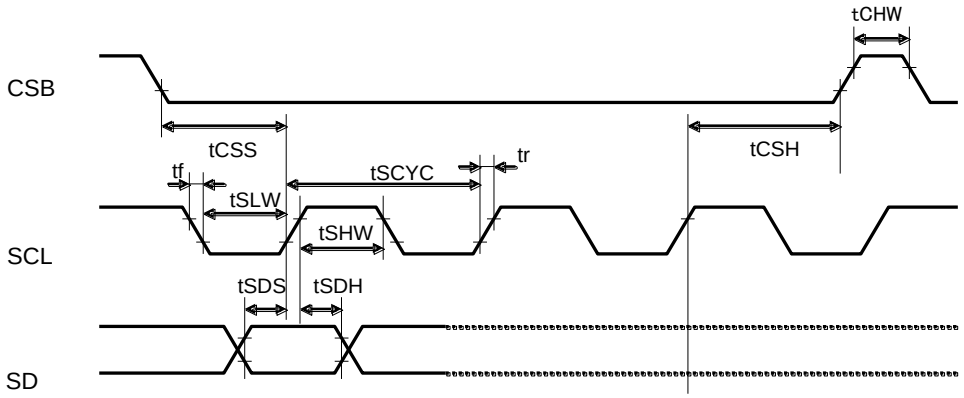

Figure 4. Interface Timing

●**I/O equivalent circuit**

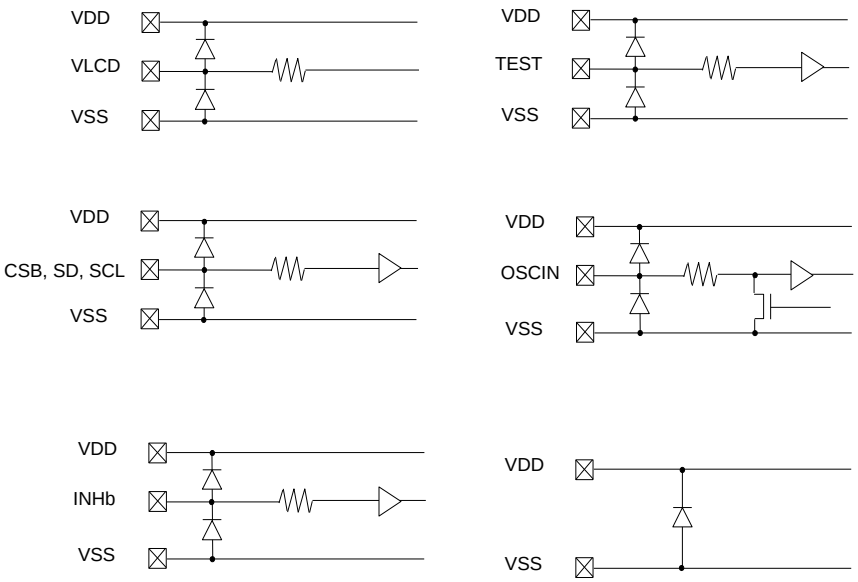

Figure 5. I/O equivalent circuit

© 2013 ROHM Co., Ltd. All rights reserved.

●**Example of recommended circuit**

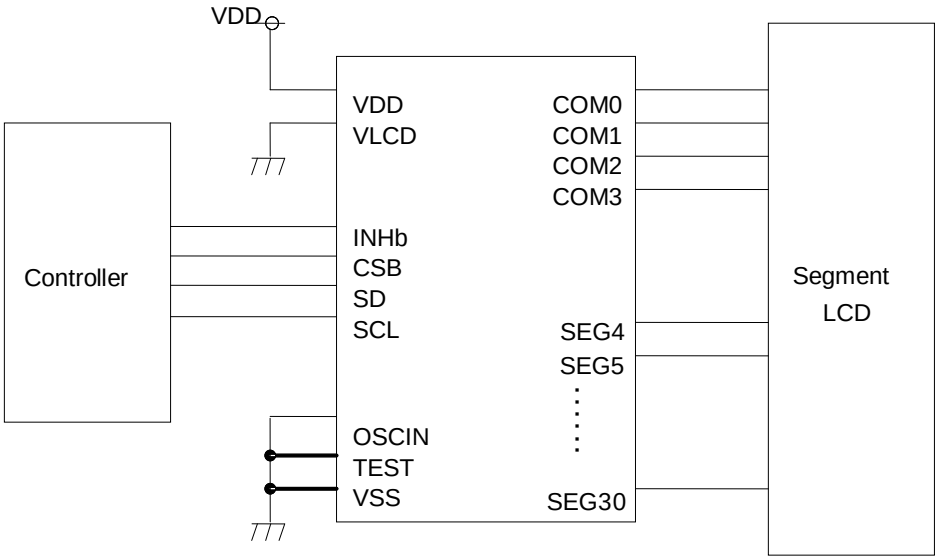

Using internal oscillator circuit mode

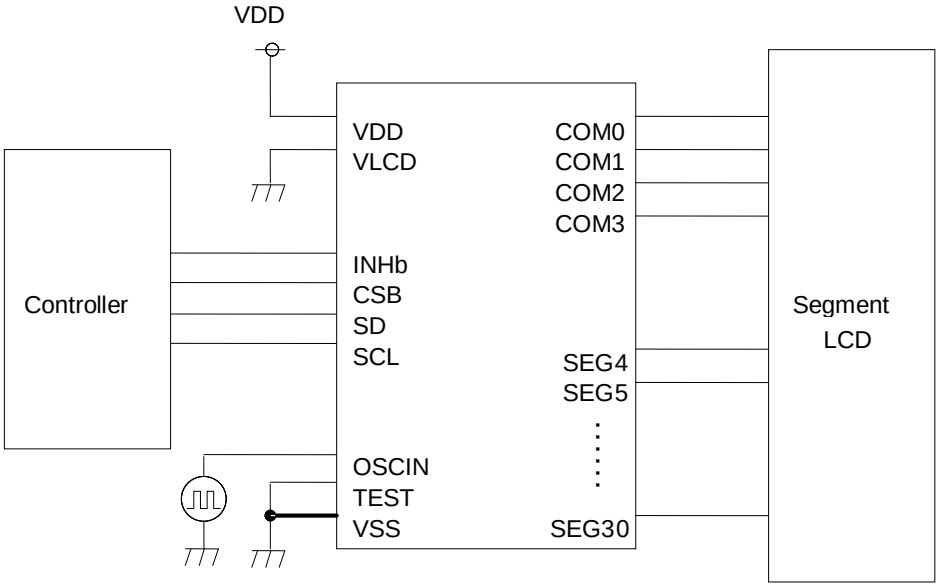

Using external oscillator mode

Figure 6. example recommended circuit

© 2013 ROHM Co., Ltd. All rights reserved.

●Function Description

○Command and data transfer method

○3-SPI (3wire Serial interface)

This device is controlled by 3-wire signal (CSB, SCL, and SD).
First, Interface counter is initialized with CSB="H", and CSB="L" makes SD and SCL input enable.
The protocol of 3-SPI transfer is as follows.
Each command starts with Command or Data judgment bit (D/C) as MSB data, followed by D6 to D0 during CSB ="L".
(Internal data is latched at the rising edge of SCL, it is converted to 8bits parallel data at the falling edge of 8th CLK.)

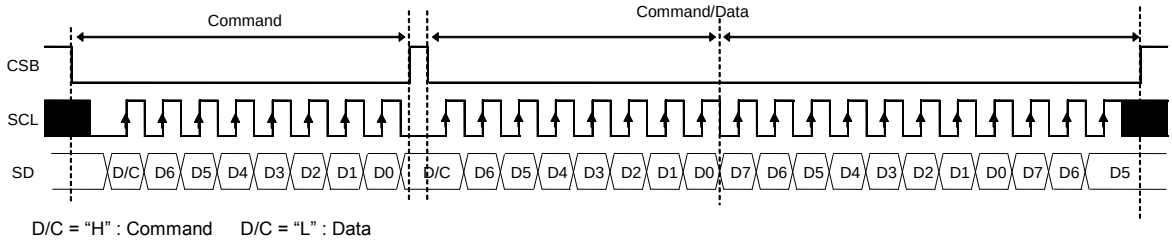

Figure 7. 3-SPI Command/Data transfer format

○Command transfer method

After CSB="H"→"L", 1st byte is always a command input.
MSB of the command input data will be judged that the next byte data, it is a command or display data (This bit is called "command or data judgment bit").
When set "command or data judge bit"='1', next byte will be (continuously) command.
When set "command or data judge bit"='0', next byte data is display data.

1 Command	1 Command	1 Command	0 Command	Display Data	…

Once it becomes display data transfer condition, it will not be back to command input condition even if D/C=1.
So if you want to send command data again, please set CSB="L"→"H".
(CSB "L"→"H" will cancel data transfer condition.)
Command transfer is done by 8bits unit, so if CSB="L"→"H" with less than 8bits data transfer, command will be cancelled.
It will be able to transfer command with CSB="L" again.

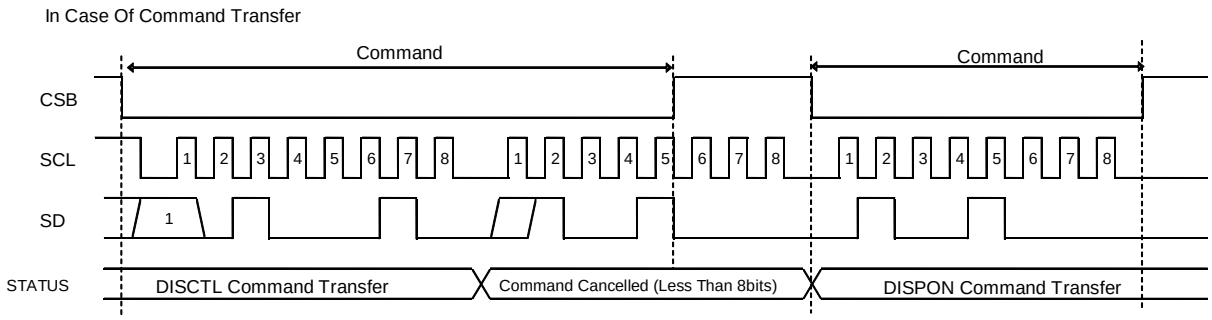

Figure 8. Command transfer format

© 2013 ROHM Co., Ltd. All rights reserved.

○Write display data and transfer method

This LSI has Display Data RAM (DDRAM) of 27×4=108bit.
As SEG0, SEG1, SEG2, SEG3, SEG31, SEG32, SEG33, SEG34 are not output, these address will be dummy address.
The relationship between data input and display data, DDRAM data and address are as follows.

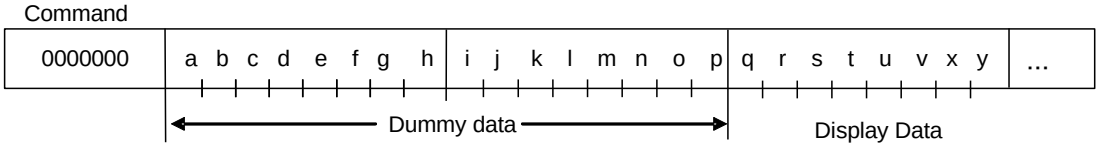

8 bit data will be stored in DDRAM. The address to be written is the address specified by ADSET command, and the address is automatically incremented in every 4bit data.
Data can be continuously written in DDRAM by transmitting Data continuously.
(When RAM data is written successively after writing RAM data to 22h (SEG34), the address is returned to 00h (SEG0) by the auto-increment function.

	Dummy data				DDRAM address						Dummy data				
	00h	01h	02h	03h	04h	05h	06h	07h	.....	1Eh	1Fh	20h	21h	22h	
BIT 0	a	e	i	m	q	u									COM0
BIT 1	b	f	j	n	r	v									COM1
BIT 2	c	g	k	o	s	x									COM2
BIT 3	d	h	l	p	t	y									COM3
	SEG 0	SEG 1	SEG 2	SEG 3	SEG 4	SEG 5	SEG 6	SEG 7	.....	SEG 30	SEG 31	SEG 32	SEG 33	SEG 34	

As data transfer to DDRAM happens every 4bit data, it will be cancelled if it changes CSB="L"→"H" before 4bits data transfer.

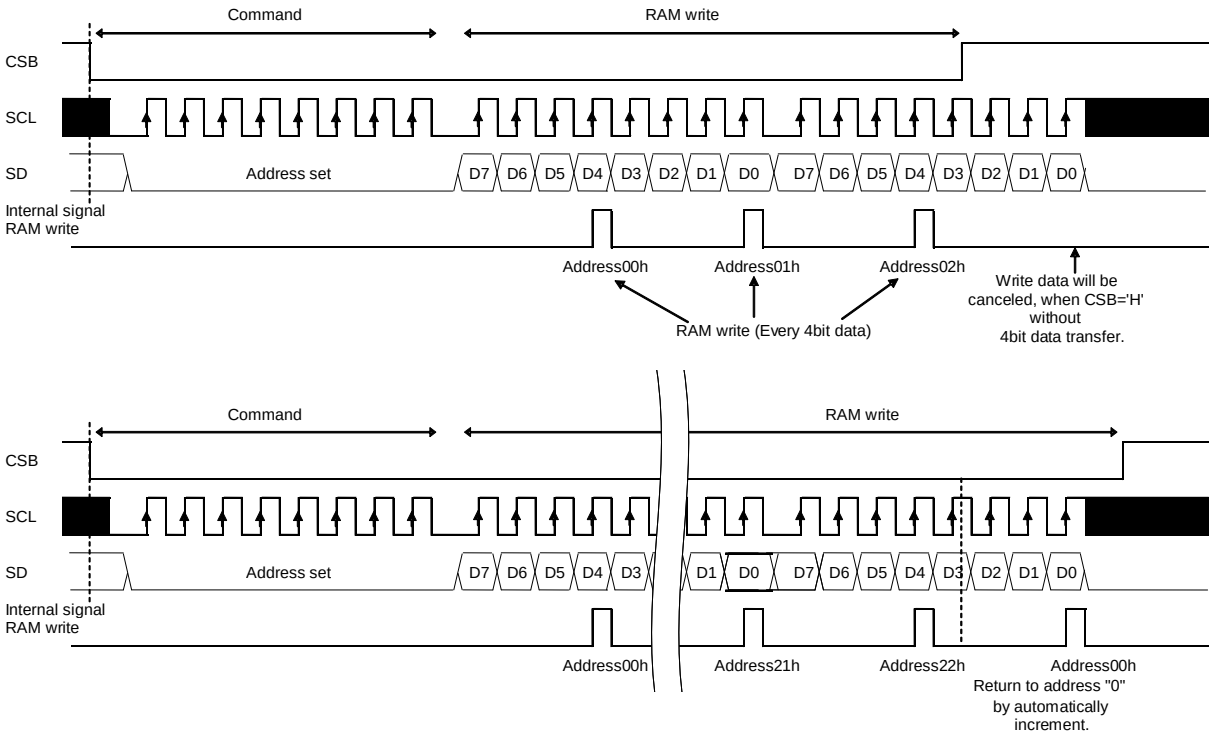

Figure 9. Data Transfer Format

© 2013 ROHM Co., Ltd. All rights reserved.

○OSCILLATOR

There are two kinds of clock for logic and analog circuit; from internal oscillator circuit or external clock input. If internal oscillator circuit will be used, OSCIN must be connected to VSS.

*When you use external clock, execute ICSET command and connect OSCIN to external clock.

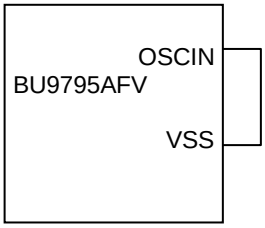

Figure 10. Internal oscillator circuit mode

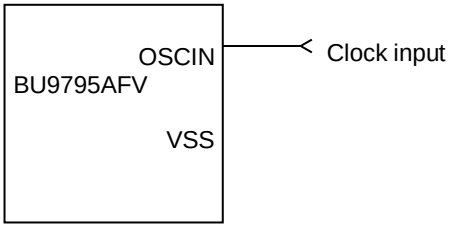

Figure 11. External clock mode

○LCD Driver Bias Circuit

This LSI generates LCD driving voltage with on-chip Buffer AMP.
And it can drive LCD at low power consumption.
*1/3 and 1/2Bias can be set in MODESET command.
*Line and frame inversion can be set in DISCTL command.
Refer to “LCD driving waveform” about each LCD driving waveform.

○Blink timing generator

This device has Blinking function.
*This LSI is able to set blink mode with BLKCTL command.
Blink frequency varies widely by characteristic of fCLK, when internal oscillation circuit.
Refer to Oscillation Characteristics for more details on fCLK.

○Reset (initial) condition

Initial condition after execute SOFTWARE RESET is as follows.
・Display is OFF.
・DDRAM address is initialized (DDRAM Data is not initialized).
Refer to Command Description about initialize value of register.

●Command / Function List

Description List of Command / Function

No.	Command	Function
1	Mode Set (MODESET)	Set LCD drive mode
2	Address Set (ADSET)	Set LCD display mode 1
3	Display Control (DISCTL)	Set LCD display mode 2
4	Set IC Operation (ICSET)	Set IC operation
5	Blink Control (BLKCTL)	Set blink mode
6	All Pixel Control (APCTL)	Set pixel condition

© 2013 ROHM Co., Ltd. All rights reserved.

●Detailed Command Description

D7 (MSB) is bit for command or data judgment.
Refer to Command and data transfer method.

C : 0 : Next byte is RAM write data.
1 : Next byte is command.

○Mode Set (MODE SET)

MSB LSB

D7	D6	D5	D4	D3	D2	D1	D0
C	1	0	*	P3	P2	*	*

(* : Don't care)

Set display ON and OFF

Setting	P3	Reset initialize condition
Display OFF(DISPOFF)	0	○
Display ON(DISPON)	1	

Display OFF : Regardless of DDRAM data, all SEGMENT and COMMON output will be stopped after 1 frame of data write. Display OFF mode will be finished by Display ON.
Display ON : SEGMENT and COMMON output will be active and start to read the display data from DDRAM.

(Note) It is not synchronize with display frame, when it will be controlled display ON/OFF with INHb terminal.

Set bias level

Setting	P2	Reset initialize condition
1/3 Bias	0	○
1/2 Bias	1	

Refer to LCD driving waveform.

○Address set (ADSET)

MSB LSB

D7	D6	D5	D4	D3	D2	D1	D0
C	0	0	P4	P3	P2	P1	P0

Address data is specified in P[4 : 0] and P2 (ICSET command) as follows.

	MSB			LSB
Internal register	Address [5]	Address [4]	. . .	Address [0]
Bit of each command	ICSET [P2]	ADSET [P4]	. . .	ADSET [P0]

The address is 00h in reset condition. The valid address is 00h to 22h.
Another address is invalid, (otherwise address will be set to 00h.)
P2 of ICSET command is only to define either MSB of address is "1" or "0".
Address counter will be set only when ADSET command is executed.

© 2013 ROHM Co., Ltd. All rights reserved.

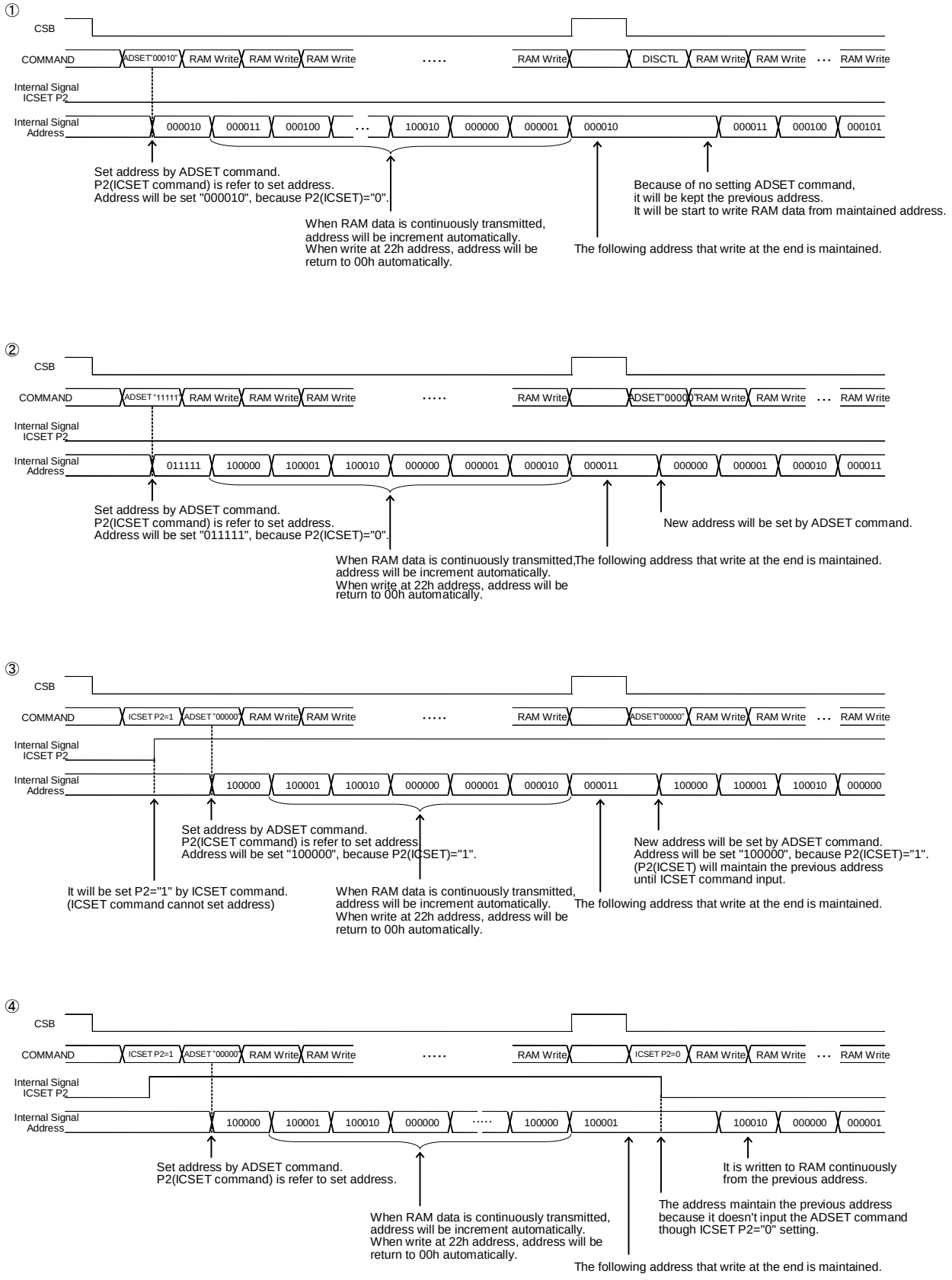

Figure 12. Address Set sequence

© 2013 ROHM Co., Ltd. All rights reserved.

○Display control (DISCTL)

MSB LSB

D7	D6	D5	D4	D3	D2	D1	D0
C	0	1	P4	P3	P2	P1	P0

Set Frame frequency

Setting	P4	P3	Reset initialize condition
80Hz	0	0	○
71Hz	0	1	
64Hz	1	0	
53Hz	1	1	

* About the characteristics of FR, refer to Oscillation characteristics.

Set LCD drive waveform

Setting	P2	Reset initialize condition
Line inversion	0	○
Frame inversion	1	

Set Power save mode

Setting	P1	P0	Reset initialize condition
Power save mode 1	0	0	
Power save mode 2	0	1	
Normal mode	1	0	○
High power mode	1	1	

*VDD-VLCD≥3.0V is required for High power mode.

(Reference current consumption data)

Setting	Reset initialize condition
Power save mode 1	×0.5
Power save mode 2	×0.67
Normal mode	×1.0
High power mode	×1.8

*Above current consumption data is reference value. It depends on panel load.

(Note) Frame rate FR / LCD drive waveform / Power save mode SR will effect display image.
Select the best value in point of current consumption and display image using LCD panel (under real application).

Mode	Screen flicker	Display image / contrast
Frame frequency	○	-
LCD drive waveform	○	○
Power save mode	-	○

© 2013 ROHM Co., Ltd. All rights reserved.

○Set IC Operation (ICSET)

MSB LSB

D7	D6	D5	D4	D3	D2	D1	D0
C	1	1	0	1	P2	P1	P0

P2 : MSB data of DDRAM address. Please refer to “ADSET” command.

Setting	P2	Reset initialize condition
Address MSB’0’	0	○
Address MSB’1’	1	

Set Software Reset condition

Setting	P1
No operation	0
Software Reset	1

When “Software Reset” is executed, this LSI will be reset to initial condition.
If software reset is executed, the value of P2 and P1 will be ignored and they will be set initialized condition. (Refer to “Reset initial condition”)

Switch between internal clock and external clock.

Setting	P0	Reset initialize condition
Internal clock	0	○
External clock input	1	

For internal clock : OSCIN is connected to VSS.
For external clock input : Input external clock into OSCIN.

<external Clock Frame frequency calculation>
DISCTL 80Hz select : Frame frequency [Hz] = external clock[Hz] / 512
DISCTL 71Hz select : Frame frequency [Hz] = external clock[Hz] / 576
DISCTL 64Hz select : Frame frequency [Hz] = external clock[Hz] / 648
DISCTL 53Hz select : Frame frequency [Hz] = external clock[Hz] / 768

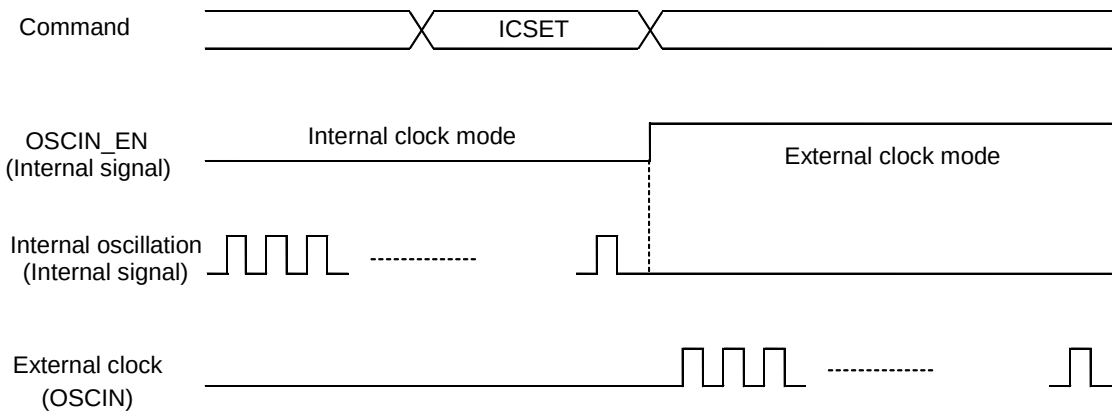

Figure 13. OSCMODE switching timing

© 2013 ROHM Co., Ltd. All rights reserved.

○Blink control (BLKCTL)

MSB LSB

D7	D6	D5	D4	D3	D2	D1	D0
C	1	1	1	0	*	P1	P0

Set blink condition

Setting (Hz)	P1	P0	Reset initialize condition
OFF	0	0	○
0.5	0	1	
1	1	0	
2	1	1	

○All pixel control (APCTL)

MSB LSB

D7	D6	D5	D4	D3	D2	D1	D0
C	1	1	1	1	1	P1	P0

All display set ON. OFF

Setting	P1	Reset initialize condition
Normal	0	○
All pixel ON	1	

Setting	P0	Reset initialize condition
Normal	0	○
All pixel OFF	1	

All pixels ON : All pixels are ON regardless of DDRAM data.
All pixels OFF : All pixels are OFF regardless of DDRAM data.

(Note) All pixels ON/OFF is effective only at the time of “Display ON” status.
The data of DDRAM do not change with this command.
If both P1 and P0=‘1’, APOFF is selected. APOFF has higher priority than APON.

© 2013 ROHM Co., Ltd. All rights reserved.

●**LCD driving waveform**

(1/3bias)

Line inversion

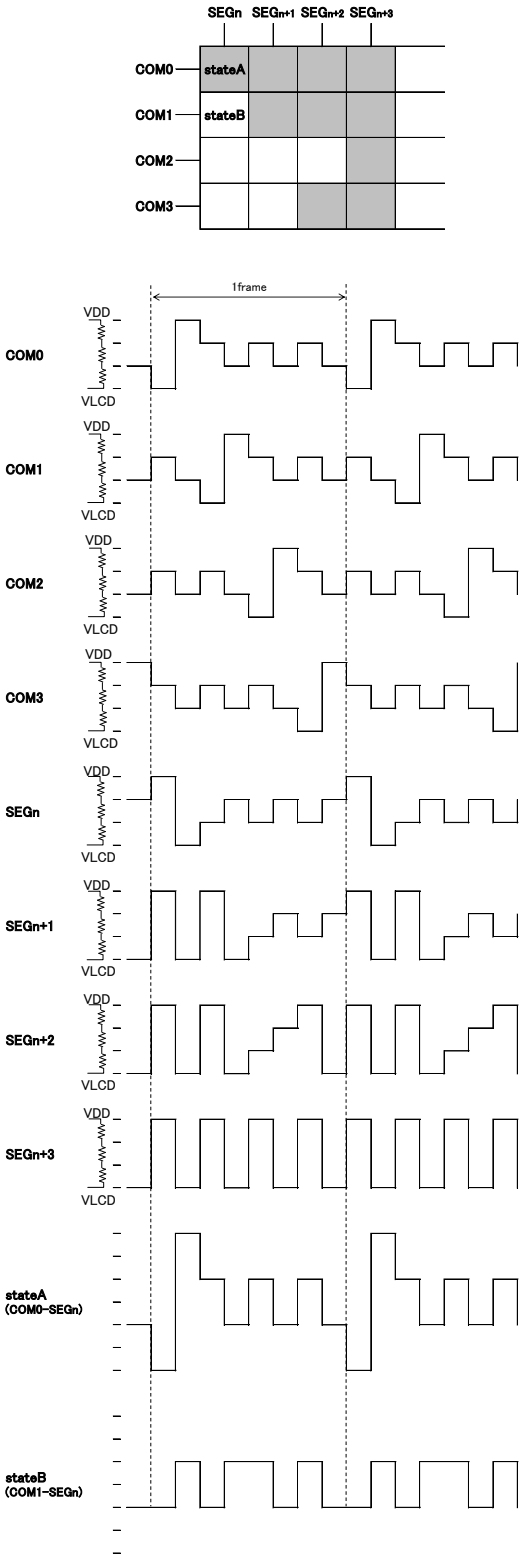

Figure 14. Line inversion waveform(1/3bias)

Frame inversion

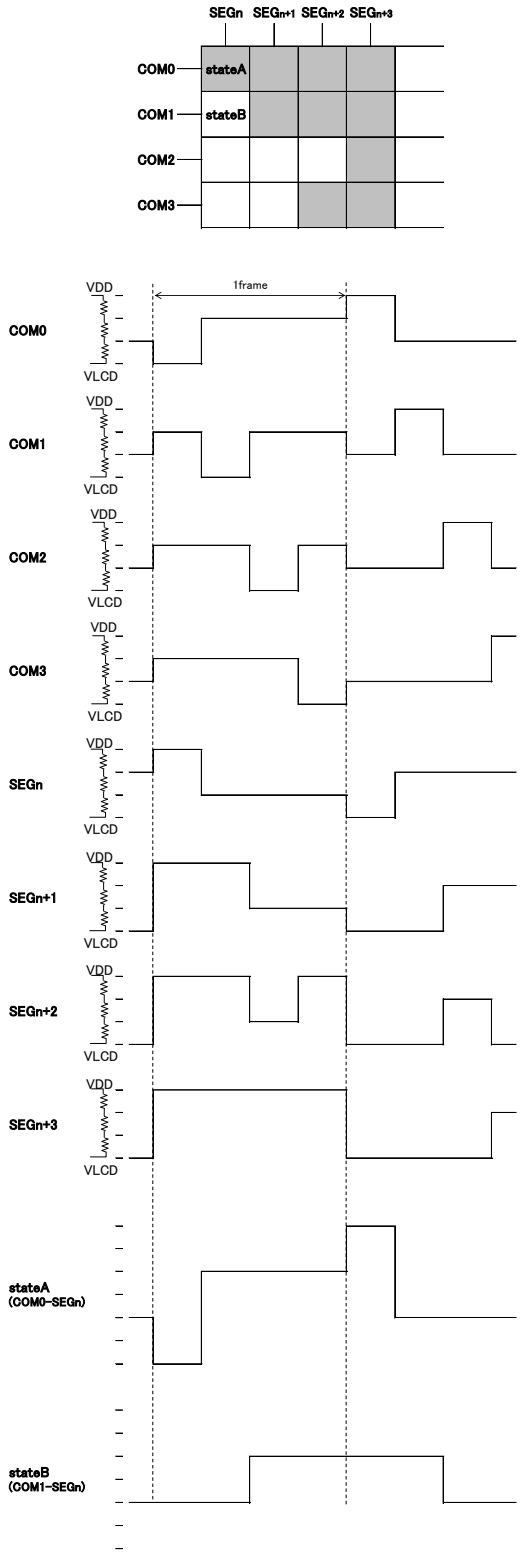

Figure 15. Frame inversion waveform(1/3bias)

© 2013 ROHM Co., Ltd. All rights reserved.

(1/2bias)

Line inversion

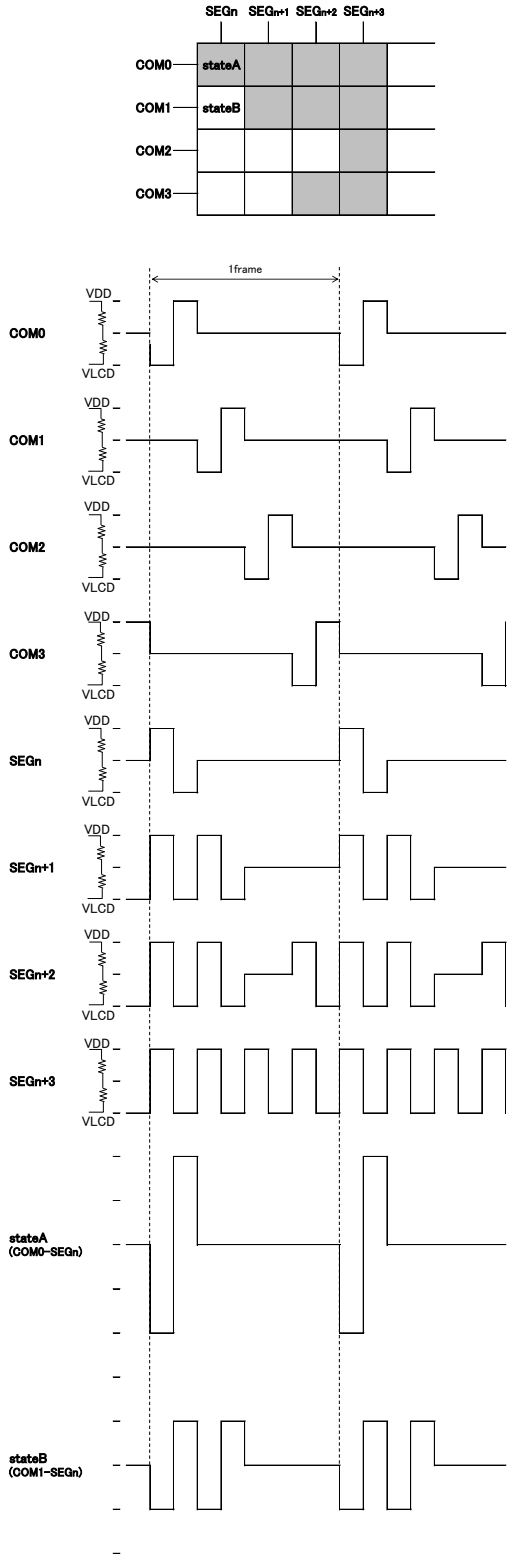

Figure 16. Line inversion waveform(1/2bias)

Frame inversion

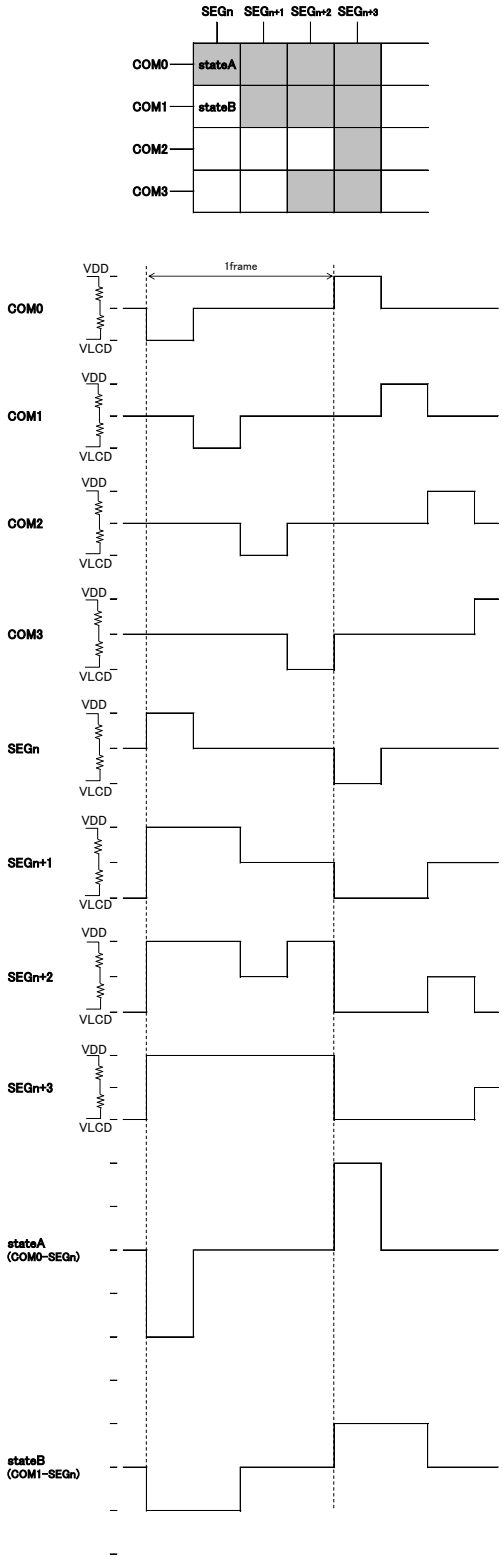

Figure 17. Frame inversion waveform(1/2bias)

© 2013 ROHM Co., Ltd. All rights reserved.

●**Example of display data**

If LCD layout pattern is shown as in Figure18, Figure19 and DDRAM data is shown as in Table 2, display pattern will be shown as in Figure 20.

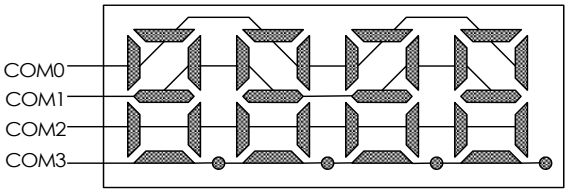

Figure 18. Example COM line pattern

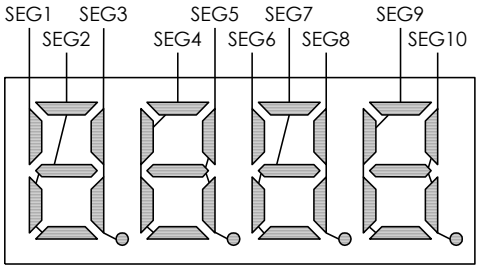

Figure 19. Example SEG line pattern

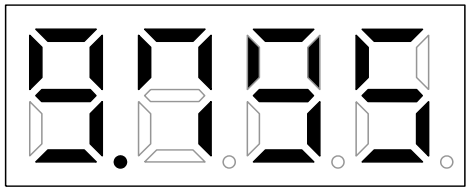

Figure 20. Example Display pattern

Table 2. DDRAM Data map

		Dummy data																			
		SEG0	SEG1	SEG2	SEG3	SEG4	SEG5	SEG6	SEG7	SEG8	SEG9	SEG10	SEG11	SEG12	SEG13	SEG14	SEG15	SEG16	SEG17	SEG18	SEG19
COM0	D0	0	1	1	0	1	1	1	1	0	1	0	0	0	0	0	0	0	0	0	0
COM1	D1	0	0	1	1	1	0	0	1	1	1	1	0	0	0	0	0	0	0	0	0
COM2	D2	0	0	0	1	0	1	0	0	1	0	1	0	0	0	0	0	0	0	0	0
COM3	D3	0	0	1	1	0	0	0	1	0	1	0	0	0	0	0	0	0	0	0	0
Address		00h	01h	02h	03h	04h	05h	06h	07h	08h	09h	0Ah	0Bh	0Ch	0Dh	0Eh	0Fh	10h	11h	12h	13h

As SEG0, SEG1, SEG2, SEG3, SEG31, SEG32, SEG33, SEG34 are not output, 00h – 03h address will be dummy address.

© 2013 ROHM Co., Ltd. All rights reserved.

●Initialize sequence

Please follow sequence below after Power-On to set this device to initial condition.

Power on
↓
CSB 'H' …I/F initialize condition
↓
CSB 'L' …I/F Data transfer start
↓
Execute Software Reset by sending ICSET command

* Each register value and DDRAM address, DDRAM data are random condition after power on till initialize sequence is executed.

●Start sequence

○Start sequence example 1

No.	Input	D7	D6	D5	D4	D3	D2	D1	D0	Descriptions
1	Power on									VDD=0 to 5V (Tr=0.1ms)
	↓									
2	wait 100µs									Initialize IC
	↓									
3	CSB 'H'									Initialize I/F data
	↓									
4	CSB 'L'									I/F Data transfer start
	↓									
5	ICSET	1	1	1	0	1	*	1	0	Software Reset
	↓									
6	BLKCTL	1	1	1	1	0	*	0	1	
	↓									
7	DISCTL	1	0	1	0	0	1	1	0	
	↓									
8	ICSET	1	1	1	0	1	0	0	0	RAM address MSB set
	↓									
9	ADSET	0	0	0	0	0	0	0	0	RAM address set
	↓									
10	Display Data	*	*	*	*	*	*	*	*	address 00h to 01h
	Display Data	*	*	*	*	*	*	*	*	address 02h to 03h
	⋮									⋮
	Display Data	*	*	*	*	*	*	*	*	address 22h to 00h
	↓									
11	CSB 'H'									I/F Data transfer stop
	↓									
12	CSB 'L'									I/F Data transfer start
	↓									
13	MODESET	1	1	0	*	1	0	*	*	Display ON
	↓									
14	CSB 'H'									I/F Data transfer stop

© 2013 ROHM Co., Ltd. All rights reserved.

○Start sequence example 2

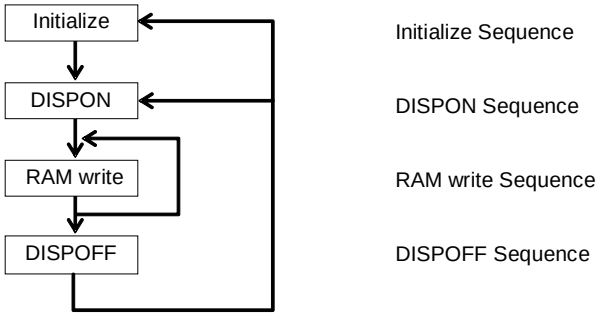

This LSI is initialized with Initialize Sequence. And start to display with DISPON Sequence.
This LSI will update display data with RAM write Sequence.
And stop the display with DISPOFF sequence.
If you want to restart to display, This LSI will restart to display with DISPON Sequence.

Initialize sequence

Input	DATA								Description
	D7	D6	D5	D4	D3	D2	D1	D0	
Power on									
wait 100µs									IC initialized
CSB 'H'									I/F initialized
CSB 'L'									
ICSET	1	1	1	0	1	0	1	0	Software Reset
MODESET	1	1	0	0	0	0	0	0	Display OFF
ADSET	0	0	0	0	0	0	0	0	RAM address set
Display Data	*	*	*	*	*	*	*	*	Display data
…									
CSB 'H'									

DISPON sequence

Input	DATA								Description
	D7	D6	D5	D4	D3	D2	D1	D0	
CSB 'L'									
DISCTL	1	0	1	1	1	1	1	1	Display Control
BLKCTL	1	1	1	1	0	0	0	0	BLKCTL
APCTL	1	1	1	1	1	1	0	0	APCTL
MODESET	1	1	0	0	1	0	0	0	Display ON
CSB 'H'									

RAM write sequence

Input	DATA								Description
	D7	D6	D5	D4	D3	D2	D1	D0	
CSB 'L'									
DISCTL	1	0	1	1	1	1	1	1	Display Control
BLKCTL	1	1	1	1	0	0	0	0	BLKCTL
APCTL	1	1	1	1	1	1	0	0	APCTL
MODESET	1	1	0	0	1	0	0	0	Display ON
ADSET	0	0	0	0	0	0	0	0	RAM address set
Display Data	*	*	*	*	*	*	*	*	Display data
…									
CSB 'H'									

DISPOFF sequence

Input	DATA								Description
	D7	D6	D5	D4	D3	D2	D1	D0	
CSB 'L'									
MODESET	1	1	0	0	0	0	0	0	Display OFF
CSB 'H'									

© 2013 ROHM Co., Ltd. All rights reserved.

●**Example of start sequence**

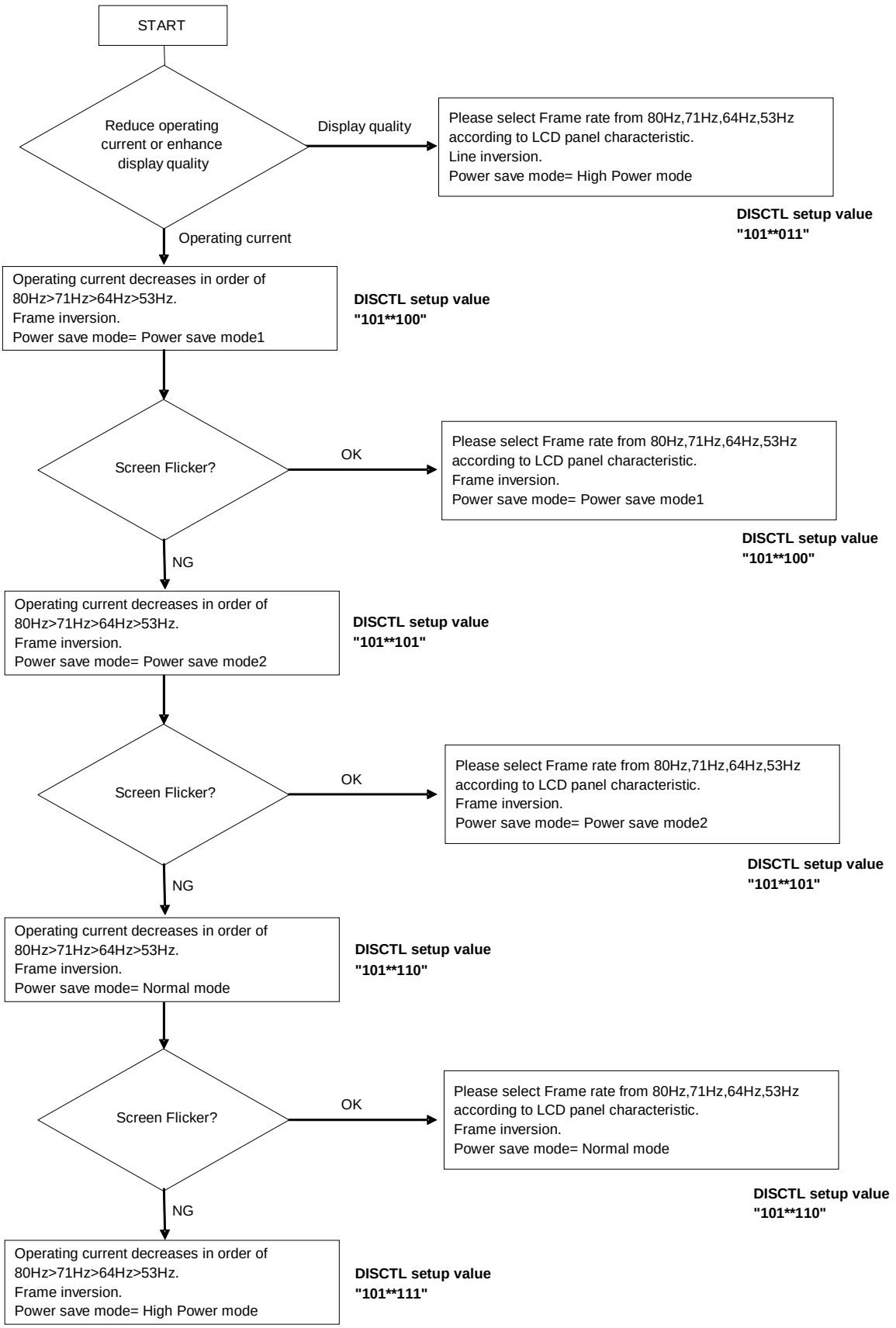

© 2013 ROHM Co., Ltd. All rights reserved.

●Cautions on Power ON condition

This LSI has “P.O.R” (Power-On Reset) circuit and Software Reset function.
Please keep the following recommended Power-On conditions in order to power up properly.

Please set power up conditions to meet the recommended tR, tF, tOFF, and Vbot spec below in order to ensure P.O.R operation.

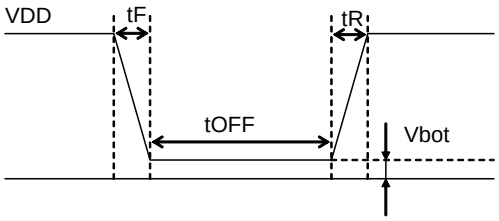

Figure 21. Power ON/OFF waveform

Recommended condition of tR,tF,tOFF,Vbot

tR	tF	tOFF	Vbot
Less than 1ms	Less than 1ms	More than 150ms	Less than 0.1V

If it is difficult to meet above conditions, execute the following sequence after Power-On.
Command input is not accepted during power off. It has to take care that software reset is not a perfect substitute to POR function.

(1) CSB=“L”→”H” condition

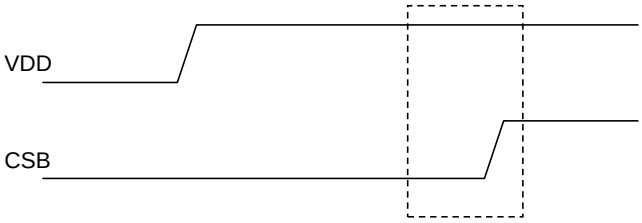

Figure 22. CSB Timing

(2) After CSB”H”→”L”, execute Software Reset (ICSET command).

© 2013 ROHM Co., Ltd. All rights reserved.

●**Cautions on application**

In case, BU9795AFV used at VLCD≠VSS, voltage gap occur between SEG line to COM1–3 line at Display off state. Because of this voltage gap, there is possibility to display LCD for a moment.
To avoid this phenomenon, please decide VDD and VLCD level to satisfy Voff voltage lower than OFF level (OFF level = 1V at the example explained below).

condition : VDD=5.0V
VLCD=2.0V
1/3bias
DDRAM data ALL "H"
Frame inversion

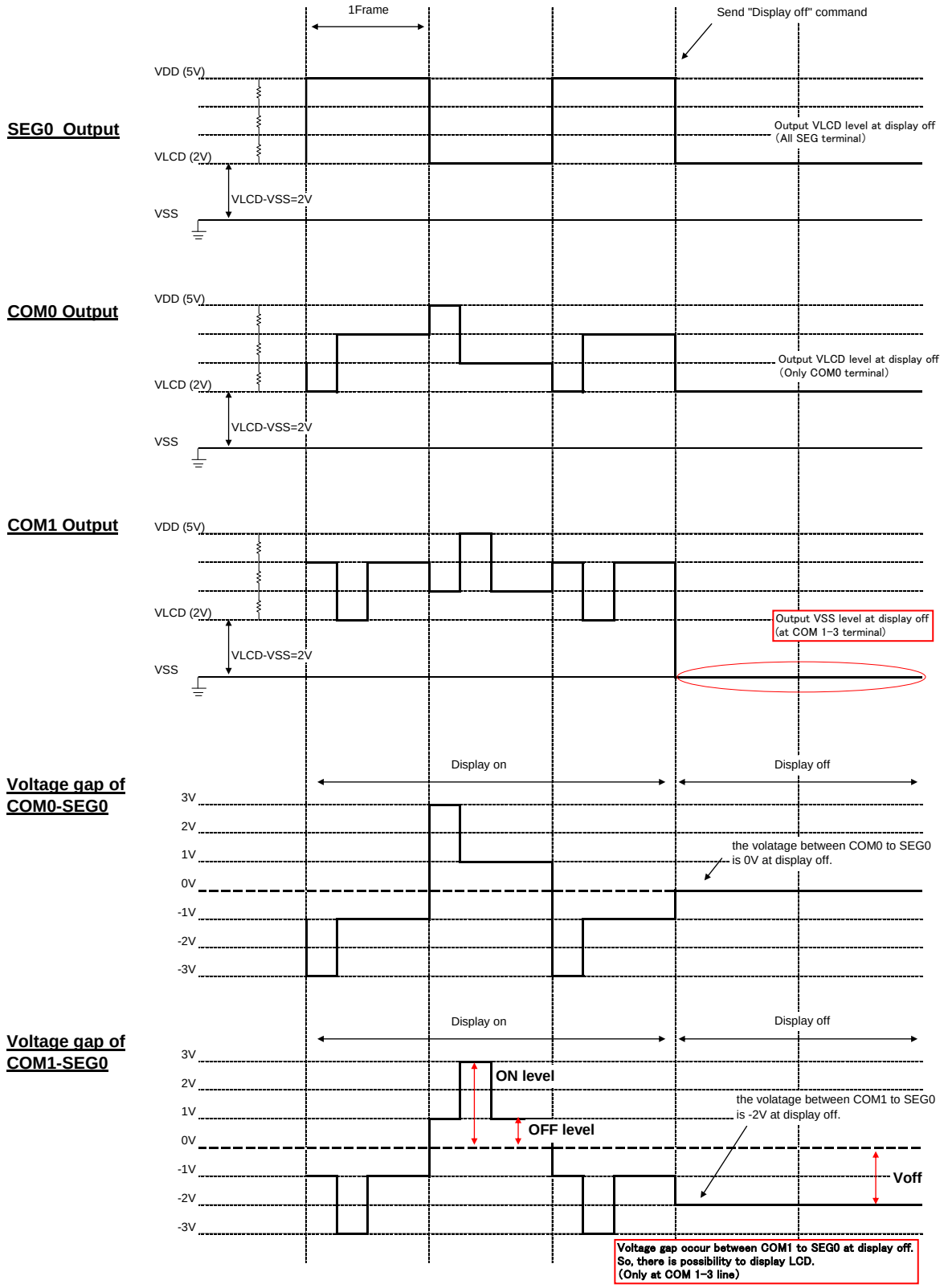

© 2013 ROHM Co., Ltd. All rights reserved.

●Operational Notes

(1) Absolute Maximum Ratings
Operating the IC over the absolute maximum ratings may damage the IC. The damage can either be a short circuit between pins or an open circuit between pins. Therefore, it is important to consider circuit protection measures, such as adding a fuse, in case the IC is operated over the absolute maximum ratings.

(2) Recommended Operating conditions
These conditions represent a range within which the expected characteristics of the IC can be approximately obtained. The electrical characteristics are guaranteed under the conditions of each parameter.

(3) Reverse Connection of Power Supply
Connecting the power supply in reverse polarity can damage the IC. Take precautions against reverse polarity when connecting the power supply, such as mounting an external diode between the power supply and the IC's power supply terminals.

(4) Power Supply Lines
Design the PCB layout pattern to provide low impedance ground and supply lines. Separate the ground and supply lines of the digital and analog blocks to prevent noise in the ground and supply lines of the digital block from affecting the analog block. Furthermore, connect a capacitor to ground at all power supply pins. Consider the effect of temperature and aging on the capacitance value when using electrolytic capacitors.

(5) Ground Voltage
The voltage of the ground pin must be the lowest voltage of all pins of the IC at all operating conditions. Ensure that no pins are at a voltage below the ground pin at any time, even during transient condition.

(6) Short between Pins and Mounting Errors
Be careful when mounting the IC on printed circuit boards. The IC may be damaged if it is mounted in a wrong orientation or if pins are shorted together. Short circuit may be caused by conductive particles caught between the pins.

(7) Operation under Strong Electromagnetic Field
Operating the IC in the presence of a strong electromagnetic field may cause the IC to malfunction.

(8) Testing on Application Boards
When testing the IC on an application board, connecting a capacitor directly to a low-impedance output pin may subject the IC to stress. Always discharge capacitors completely after each process or step. The IC's power supply should always be turned off completely before connecting or removing it from the test setup during the inspection process. To prevent damage from static discharge, ground the IC during assembly and use similar precautions during transport and storage.

(9) Regarding Input Pins of the IC
In the construction of this IC, P-N junctions are inevitably formed creating parasitic diodes or transistors. The operation of these parasitic elements can result in mutual interference among circuits, operational faults, or physical damage. Therefore, conditions which cause these parasitic elements to operate, such as applying a voltage to an input pin lower than the GND voltage should be avoided. Furthermore, do not apply a voltage to the input terminals when no power supply voltage is applied to the IC. Even if the power supply voltage is applied, make sure that the input terminals have voltages within the values specified in the electrical characteristics of this IC.

(10) GND Wiring Pattern
When using both small-signal and large-current GND traces, the two ground traces should be routed separately but connected to a single ground at the reference point of the application board to avoid fluctuations in the small-signal ground caused by large currents. Also ensure that the GND traces of external components do not cause variations on the GND voltage. The power supply and ground lines must be as short and thick as possible to reduce line impedance.

(11) External Capacitor
When using a ceramic capacitor, determine the dielectric constant considering the change of capacitance with temperature and the decrease in nominal capacitance due to DC bias and others.

(12) Unused Input Terminals
Input terminals of an IC are often connected to the gate of a CMOS transistor. The gate has extremely high impedance and extremely low capacitance. If left unconnected, the electric field from the outside can easily charge it. The small charge acquired in this way is enough to produce a significant effect on the conduction through the transistor and cause unexpected operation of IC. So unless otherwise specified, input terminals not being used should be connected to the power supply or ground line.

(13) Rush current
When power is first supplied to the IC, rush current may flow instantaneously. It is possible that the charge current to the parasitic capacitance of internal photo diode or the internal logic may be unstable. Therefore, give special consideration to power coupling capacitance, power wiring, width of GND wiring, and routing of connections.

© 2013 ROHM Co., Ltd. All rights reserved.

●**Ordering Information**

B U 9 7 9 5 A F V - E2

Part Number

Package

FV:SSOP-B40

Packaging and forming specification
E2: Embossed tape and reel

●**Lineup**

Segment output	Common output	Package		Orderable Part Number
27	4	SSOP-B40	Reel of 2000	BU9795AFV-E2

© 2013 ROHM Co., Ltd. All rights reserved.

●**Physical Dimension Tape and Reel Information**

Package Name	SSOP-B40

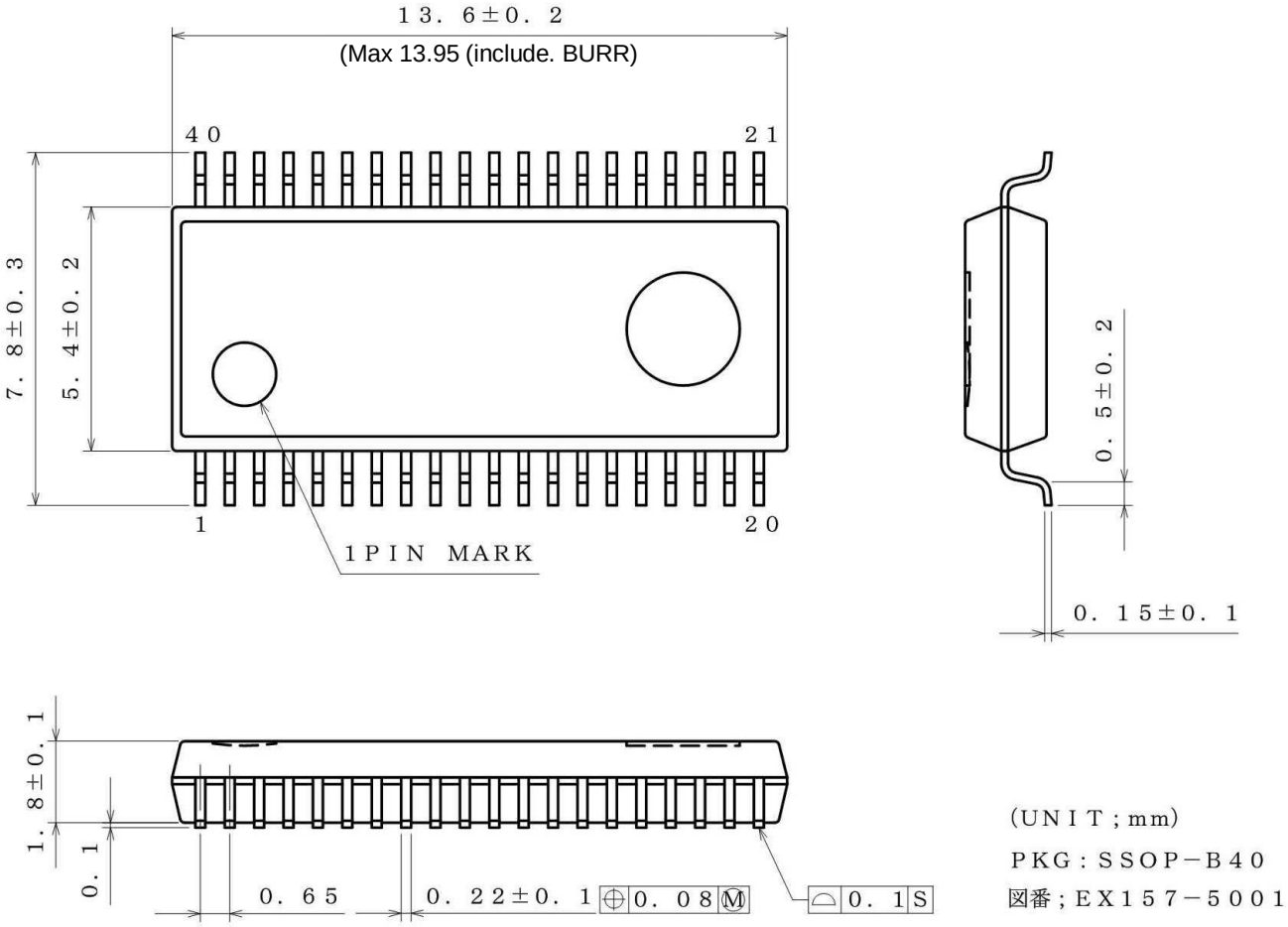

<Tape and Reel information>

Tape	Embossed carrier tape
Quantity	2000pcs
Direction of feed	E2 (The direction is the 1pin of product is at the upper left when you hold reel on the left hand and you pull out the tape on the right hand)

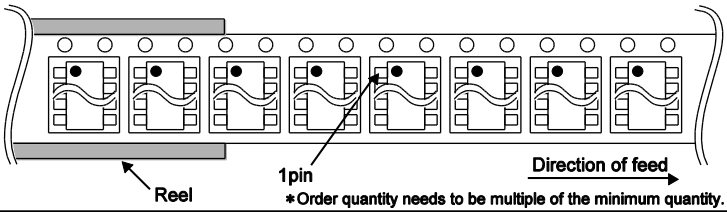

∗Order quantity needs to be multiple of the minimum quantity.

© 2013 ROHM Co., Ltd. All rights reserved.

●Marking Diagrams

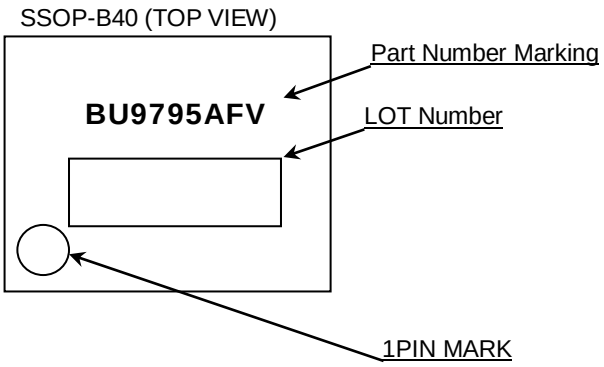

Part Number	Package	Part Number Marking
BU9795AFV	SSOP-B40	BU9795AFV

© 2013 ROHM Co., Ltd. All rights reserved.

●**Revision History**

Date	Revision	Changes
14.Mar.2012	001	New Release
12.July.2012	002	Add BU9795AKS2
8.Jan.2013	003	Improved the statement in all pages. Deleted “Status of this document” in page 30.
20.Mar.2019	004	Remove BU9795AKV (VQFP48C) Remove BU9795AGUW (VBGA048W040) Remove BU9795AKS2 (SQFP-T52M)

© 2013 ROHM Co., Ltd. All rights reserved.

Notice

Precaution on using ROHM Products

1. Our Products are designed and manufactured for application in ordinary electronic equipment (such as AV equipment, OA equipment, telecommunication equipment, home electronic appliances, amusement equipment, etc.). If you intend to use our Products in devices requiring extremely high reliability (such as medical equipment (Note 1), transport equipment, traffic equipment, aircraft/spacecraft, nuclear power controllers, fuel controllers, car equipment including car accessories, safety devices, etc.) and whose malfunction or failure may cause loss of human life, bodily injury or serious damage to property ("Specific Applications"), please consult with the ROHM sales representative in advance. Unless otherwise agreed in writing by ROHM in advance, ROHM shall not be in any way responsible or liable for any damages, expenses or losses incurred by you or third parties arising from the use of any ROHM's Products for Specific Applications.

(Note1) Medical Equipment Classification of the Specific Applications

JAPAN	USA	EU	CHINA
CLASSⅢ	CLASSⅢ	CLASSⅡb	CLASSⅢ
CLASSⅣ		CLASSⅢ	

2. ROHM designs and manufactures its Products subject to strict quality control system. However, semiconductor products can fail or malfunction at a certain rate. Please be sure to implement, at your own responsibilities, adequate safety measures including but not limited to fail-safe design against the physical injury, damage to any property, which a failure or malfunction of our Products may cause. The following are examples of safety measures:
   [a] Installation of protection circuits or other protective devices to improve system safety
   [b] Installation of redundant circuits to reduce the impact of single or multiple circuit failure

3. Our Products are designed and manufactured for use under standard conditions and not under any special or extraordinary environments or conditions, as exemplified below. Accordingly, ROHM shall not be in any way responsible or liable for any damages, expenses or losses arising from the use of any ROHM's Products under any special or extraordinary environments or conditions. If you intend to use our Products under any special or extraordinary environments or conditions (as exemplified below), your independent verification and confirmation of product performance, reliability, etc, prior to use, must be necessary:
   [a] Use of our Products in any types of liquid, including water, oils, chemicals, and organic solvents
   [b] Use of our Products outdoors or in places where the Products are exposed to direct sunlight or dust
   [c] Use of our Products in places where the Products are exposed to sea wind or corrosive gases, including Cl_2, H_2S, NH_3, SO_2, and NO_2
   [d] Use of our Products in places where the Products are exposed to static electricity or electromagnetic waves
   [e] Use of our Products in proximity to heat-producing components, plastic cords, or other flammable items
   [f] Sealing or coating our Products with resin or other coating materials
   [g] Use of our Products without cleaning residue of flux (Exclude cases where no-clean type fluxes is used. However, recommend sufficiently about the residue.) ; or Washing our Products by using water or water-soluble cleaning agents for cleaning residue after soldering
   [h] Use of the Products in places subject to dew condensation

4. The Products are not subject to radiation-proof design.

5. Please verify and confirm characteristics of the final or mounted products in using the Products.

6. In particular, if a transient load (a large amount of load applied in a short period of time, such as pulse, is applied, confirmation of performance characteristics after on-board mounting is strongly recommended. Avoid applying power exceeding normal rated power; exceeding the power rating under steady-state loading condition may negatively affect product performance and reliability.

7. De-rate Power Dissipation depending on ambient temperature. When used in sealed area, confirm that it is the use in the range that does not exceed the maximum junction temperature.

8. Confirm that operation temperature is within the specified range described in the product specification.

9. ROHM shall not be in any way responsible or liable for failure induced under deviant condition from what is defined in this document.

Precaution for Mounting / Circuit board design

1. When a highly active halogenous (chlorine, bromine, etc.) flux is used, the residue of flux may negatively affect product performance and reliability.

2. In principle, the reflow soldering method must be used on a surface-mount products, the flow soldering method must be used on a through hole mount products. If the flow soldering method is preferred on a surface-mount products, please consult with the ROHM representative in advance.

For details, please refer to ROHM Mounting specification

© 2015 ROHM Co., Ltd. All rights reserved.

Precautions Regarding Application Examples and External Circuits

1. If change is made to the constant of an external circuit, please allow a sufficient margin considering variations of the characteristics of the Products and external components, including transient characteristics, as well as static characteristics.

2. You agree that application notes, reference designs, and associated data and information contained in this document are presented only as guidance for Products use. Therefore, in case you use such information, you are solely responsible for it and you must exercise your own independent verification and judgment in the use of such information contained in this document. ROHM shall not be in any way responsible or liable for any damages, expenses or losses incurred by you or third parties arising from the use of such information.

Precaution for Electrostatic

This Product is electrostatic sensitive product, which may be damaged due to electrostatic discharge. Please take proper caution in your manufacturing process and storage so that voltage exceeding the Products maximum rating will not be applied to Products. Please take special care under dry condition (e.g. Grounding of human body / equipment / solder iron, isolation from charged objects, setting of Ionizer, friction prevention and temperature / humidity control).

Precaution for Storage / Transportation

1. Product performance and soldered connections may deteriorate if the Products are stored in the places where:
   [a] the Products are exposed to sea winds or corrosive gases, including Cl_2, H_2S, NH_3, SO_2, and NO_2
   [b] the temperature or humidity exceeds those recommended by ROHM
   [c] the Products are exposed to direct sunshine or condensation
   [d] the Products are exposed to high Electrostatic

2. Even under ROHM recommended storage condition, solderability of products out of recommended storage time period may be degraded. It is strongly recommended to confirm solderability before using Products of which storage time is exceeding the recommended storage time period.

3. Store / transport cartons in the correct direction, which is indicated on a carton with a symbol. Otherwise bent leads may occur due to excessive stress applied when dropping of a carton.

4. Use Products within the specified time after opening a humidity barrier bag. Baking is required before using Products of which storage time is exceeding the recommended storage time period.

Precaution for Product Label

A two-dimensional barcode printed on ROHM Products label is for ROHM's internal use only.

Precaution for Disposition

When disposing Products please dispose them properly using an authorized industry waste company.

Precaution for Foreign Exchange and Foreign Trade act

Since concerned goods might be fallen under listed items of export control prescribed by Foreign exchange and Foreign trade act, please consult with ROHM in case of export.

Precaution Regarding Intellectual Property Rights

1. All information and data including but not limited to application example contained in this document is for reference only. ROHM does not warrant that foregoing information or data will not infringe any intellectual property rights or any other rights of any third party regarding such information or data.

2. ROHM shall not have any obligations where the claims, actions or demands arising from the combination of the Products with other articles such as components, circuits, systems or external equipment (including software).

3. No license, expressly or implied, is granted hereby under any intellectual property rights or other rights of ROHM or any third parties with respect to the Products or the information contained in this document. Provided, however, that ROHM will not assert its intellectual property rights or other rights against you or your customers to the extent necessary to manufacture or sell products containing the Products, subject to the terms and conditions herein.

Other Precaution

1. This document may not be reprinted or reproduced, in whole or in part, without prior written consent of ROHM.

2. The Products may not be disassembled, converted, modified, reproduced or otherwise changed without prior written consent of ROHM.

3. In no event shall you use in any way whatsoever the Products and the related technical information contained in the Products or this document for any military purposes, including but not limited to, the development of mass-destruction weapons.

4. The proper names of companies or products described in this document are trademarks or registered trademarks of ROHM, its affiliated companies or third parties.

© 2015 ROHM Co., Ltd. All rights reserved.

General Precaution

1. Before you use our Products, you are requested to carefully read this document and fully understand its contents. ROHM shall not be in any way responsible or liable for failure, malfunction or accident arising from the use of any ROHM's Products against warning, caution or note contained in this document.

2. All information contained in this document is current as of the issuing date and subject to change without any prior notice. Before purchasing or using ROHM's Products, please confirm the latest information with a ROHM sales representative.

3. The information contained in this document is provided on an "as is" basis and ROHM does not warrant that all information contained in this document is accurate and/or error-free. ROHM shall not be in any way responsible or liable for any damages, expenses or losses incurred by you or third parties resulting from inaccuracy or errors of or concerning such information.

© 2015 ROHM Co., Ltd. All rights reserved.

Mouser Electronics

Authorized Distributor

Click to View Pricing, Inventory, Delivery & Lifecycle Information:

ROHM Semiconductor:

BU9795AKS2-E2 BU9795AKV