Digital Sound Processors for FPD TVs

32bit Audio DSP with Built-in 4ch DAC and ASRC

BU9408KS2

No.12083EAT02

●General Description

This LSI is the digital sound processor which made the use digital signal processing for FPD TVs.
DSP of ROHM original is used for the TV sound processor unit, and it excels in cost performance. A selection input of two lines is possible from four digital inputs. An asynchronous sampling rate converter(ASRC) is built in one line. Three digital outputs are built in.
Two audio DA converters are built in.

●Features

■Digital Signal Processor unit

Word length:	32bit (Data RAM)
The fastest machine cycle:	40.7ns (512fs, fs = 48kHz)
Multiplier:	32 x 24 → 56bit
Adder:	32 + 32 → 32bit
Data RAM:	256 x 32bit
Coefficient RAM:	128 x 24bit
Sampling frequency:	fs = 48kHz
Master clock :	512fs（24.576MHz,fs=48kHz）

■Digital signal input (Stereo4lines):
16/20/24bit (I^2S, Left-Justified, Right-Justified)
Digital signal output (Stereo 3 lines):
16/20/24bit (I^2S, Left-Justified, Right-Justified, S/PDIF)

■.Asynchronous sampling rate converter
（one line at stereo）: 32kHz/44.1kHz/48kHz/88.2kHz/96kHz/176.4kHz/192kHz → 48kHz

■Audio DAC : One stereo output
24bit 8 x Over-sampling digital filter + 1 bit delta sigma DAC
S/N : 96dB
THD+N : 0.005%（Sine-wave 1kHz,0dB）

■Audio 16bit DAC : One stereo output
24bit 8 x Over-sampling digital filter + Audio 16bit DAC
S/N : 90dB
THD+N : 0.03%（Sine-wave 1kHz,0dB）

■The sound signal processing function for FPD TVs
Pre-Scaler, DC cut HPF, Channel Mixer, *P^2Volume*(Perfect Pure Volume), BASS, MIDDLE, TREBLE, Simulated-Stereo, Surround, *P^2Bass*, *P^2Treble*, 7Band Parametric EQ, Master Volume, L/R balance, Post-Scaler, Output signal clipper
(*P^2Volume*, *P^2Bass*, and *P^2Treble* are the sound effect functions of ROHM original.)

●Applications

Flat Panel TVs (LCD, Plasma)

© 2012 ROHM Co., Ltd. All rights reserved.

●Absolute Maximum Ratings

Items	Symbol	Ratings	Unit
Power supply voltage	V_{DD}	4.5	V
Power dissipation	P_d	850(*1)	mW
Operating temp. range	T_{opr}	-25～+85	°C
Storage temp. range	T_{stg}	-55～+125	°C

*1Use of this processor at Ta = 25°C and over is subject to reduction of 8.5mW per 1°C.
Operation is not guaranteed.

●Recommended Operating Rating(s)

Items	Symbol	Ratings	Unit
Power supply voltage	V_{DD}	3.0～3.6	V

*1 This product is not designed for protection against radioactive rays.

●Electrical Characteristics(Digital system)

V_{DD}=3.3V (Unless otherwise specified Ta = 25°C)

Items		Symbol	Limit			Unit	Conditions	Adaptive terminal
			MIN	TYP	MAX			
Input voltage	H-level voltage	V_{IH}	2.3	-	-	V		*1
	L-level voltage	V_{IL}	-	-	1.0	V		*1
Hysteresis input voltage	H-level voltage	V_{IH}	2.5	-	-	V		*2,3,4
	L-level voltage	V_{IL}	-	-	0.8	V		*2,3,4
Input current		I_I	-1	-	+1	μA	V_{IN}=0~3.3V	*1,2
Input L current to Pull-up resistor		I_{IL}	-150	-100	-50	μA	V_{IN}=0V	*3
Input H current to Pull-down resistor		I_{IH}	35	70	105	μA	V_{IN}=3.3V	*4
Output voltage	H-level voltage	V_{OH}	2.75	-	-	V	I_O=-0.6mA	*5
	L-level voltage	V_{OL}	-	-	0.55	V	I_O=0.6mA	*5
SDA Output voltage	L-level voltage	V_{OL}	-	-	0.4	V	I_O=3mA	*6

Adaptive terminal
*1 CMOS input terminal
XI(33pin)
*2 CMOS hysteresis input terminal
SCANTEST(5pin), SCL(7pin), SDA(8pin)
*3 CMOS hysteresis input terminal with a built-in pull-up resistor
LRCKI1(41pin), BCKI1(42pin), DATAI1(43pin), LRCKI2(44pin), BCKI2(45pin), DATAI2(46pin), LRCKI3(47pin), BCKI3(48pin), DATAI3(49pin), LRCKI4(50pin), BCKI4(51pin), DATAI4(52pin)
*4 CMOS input terminal with a built-in pull down resistor
I2CADR(6pin), RESETB(10pin), MUTE1B(12pin), MUTE2B(13pin), MUTE3B(14pin)
*5 CMOS output terminal
ERR1_LRC(24pin), ERR2_BCK(25pin), DATASO(26pin), DATAMO(27pin), BCKO(28pin), LRCKO(29pin), AMCLKO(30pin), SPDIFO(31pin), XO(34pin),
*6 Open drain output terminal
SDA(8pin)

© 2012 ROHM Co., Ltd. All rights reserved.

●Electrical Characteristics (Analog system)

V_{DD}=3.3V (Unless otherwise specified Ta = 25°C, R_L=10kΩ, standard V_C)

Item	Symbol	Limit			Unit	Applicable pins, conditions
		MIN	TYP	MAX		
Total						
Circuit current	I_Q	-	40	70	mA	DVDDIO,DVDDPLL,AVDDDA1, AVDDDA2
Regulator						
Output voltage	V_{REG}	1.3	1.5	1.7	V	I_O=100mA
PLLA						
Lock frequency	f_{PA8}	-	24.576	-	MHz	BCK=3.072MHz (fs=48kHz)
Audio DAC						
Max-output amplitude	V_{OMAX}	0.63	0.75	0.86	Vrms	
THD+N	THD_{DA}	-	0.005	0.03	%	0dB,1kHz
S/N	S/N_{DA}	-	96	-	dB	0dB,1kHz,A-weighted
16bitDAC						
Max-output amplitude	V_{OMAX}	0.65	0.77	0.88	Vrms	
THD+N	THD_{DA}	-	0.03	-	%	0dB,1kHz
S/N	S/N_{DA}	-	90	-	dB	0dB,1kHz,A-weighted

© 2012 ROHM Co., Ltd. All rights reserved.

●Block diagram

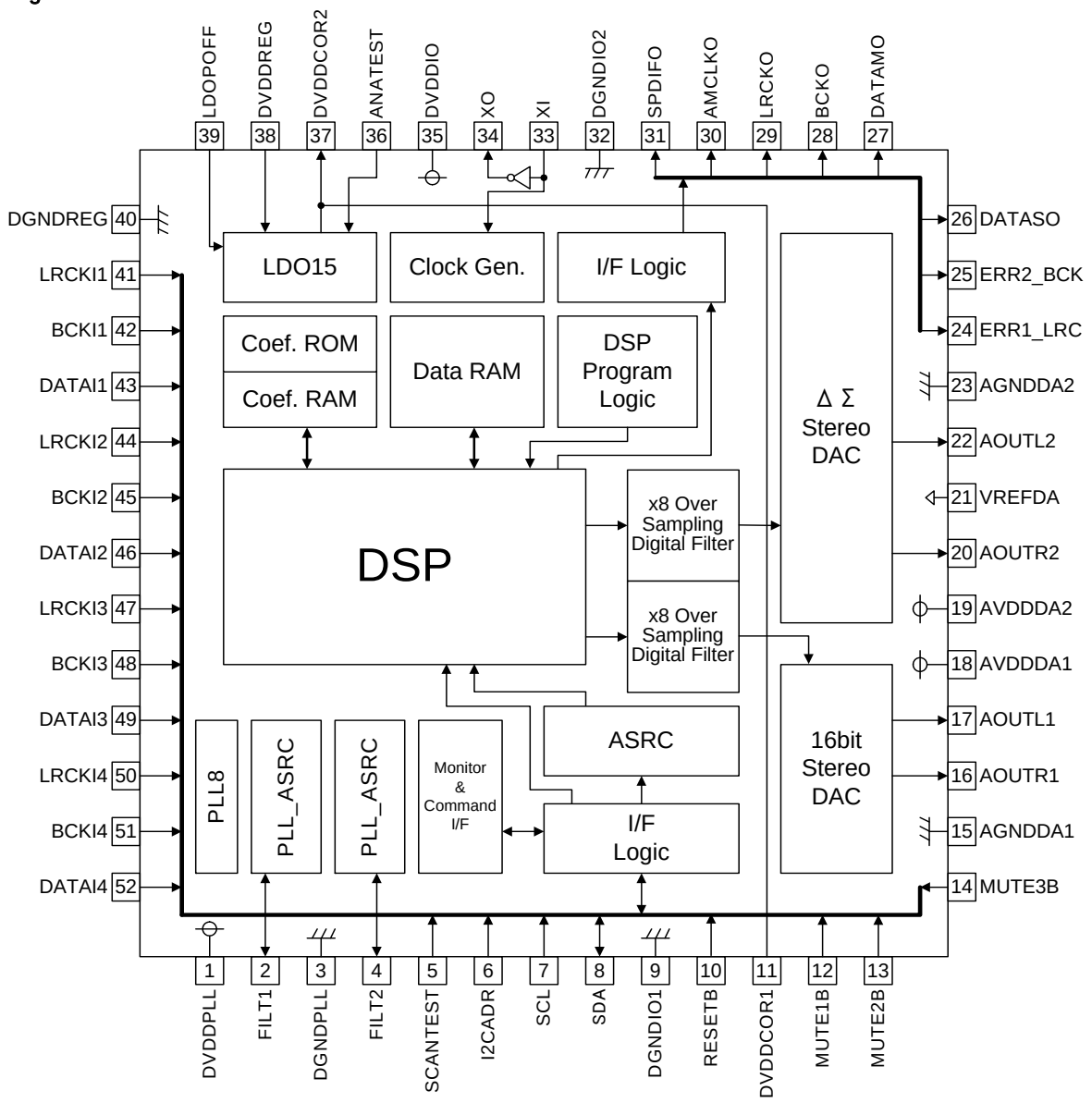

© 2012 ROHM Co., Ltd. All rights reserved.

●Pin Description(s)

No.	Name	Description of terminals	Type
1	DVDDPLL	Power supply for PLL	—
2	FILT1	PLLA filter connect terminal 1	G
3	DGNDPLL	GND for PLL	-
4	FILT2	PLLA filter connect terminal 2	G
5	SCANTEST	Test mode select pin	A
6	I2CADR	I^2C slave address select pin	B
7	SCL	I^2C transfer clock input pin	I
8	SDA	I^2C data I/O pin	H
9	DGNDIO1	Digital I/O GND	-
10	RESETB	“L” → reset condition	B
11	DVDDCOR1	Power supply for Digital core 1	-
12	MUTE1B	“L” → Digital-out mute	B
13	MUTE2B	“L” → Audio DAC mute	B
14	MUTE3B	“L” → 16bit DAC mute	B
15	AGNDDA1	GND for DAC 1	-
16	AOUTR1	Audio DAC Rch output 1	G
17	AOUTL1	Audio DAC Lch output 1	G
18	AVDDDA1	Power supply for DAC 1	-
19	AVDDDA2	Power supply for DAC 2	-
20	AOUTR2	Audio DAC Rch output 2	G
21	VREFDA	Reference voltage only for DAC	G
22	AOUTL2	Audio DAC Lch output 2	G
23	AGNDDA2	GND for DAC 2	-
24	ERR1_LRC	PLL1 Error / LRCK output	D
25	ERR2_BCK	PLL2 Error / BCK output	D
26	DATASO	I^2S audio SUB data output	D

No.	Name	Description of terminals	Type
27	DATAMO	I^2S audio Main data output	D
28	BCKO	I^2S audio bit transfer clock output	D
29	LRCKO	I^2S audio LR sampling clock output	D
30	AMCLKO	I^2S audio Synchronous clock output	D
31	SPDIFO	S/PDIF output	D
32	DGNDIO2	Digital I/O GND 2	-
33	XI	X’tal 24.576MHz input	F
34	XO	X’tal 24.576MHz output	F
35	DVDDIO	Digital I/O power supply	-
36	ANATEST	Analog test mode select pin	G
37	DVDDCOR2	Power supply for Digital core 2	-
38	DVDDREG	power supply for Regulator	-
39	LDOPOFF	Regulator POFF signal	G
40	DGNDREG	GND for Regulator	-
41	LRCKI1	I^2S audio LR sampling clock input 1	C
42	BCKI1	I^2S audio bit transfer clock input 1	C
43	DATAI1	I^2S audio data input 1	C
44	LRCKI2	I^2S audio LR sampling clock input 2	C
45	BCKI2	I^2S audio bit transfer clock input 2	C
46	DATAI2	I^2S audio data input 2	C
47	LRCKI3	I^2S audio LR sampling clock input 3	C
48	BCKI3	I^2S audio bit transfer clock input 3	C
49	DATAI3	I^2S audio data input 3	C
50	LRCKI4	I^2S audio LR sampling clock input 4	C
51	BCKI4	I^2S audio bit transfer clock input 4	C
52	DATAI4	I^2S audio data input 4	C

© 2012 ROHM Co., Ltd. All rights reserved.

●Terminal equal circuit figure

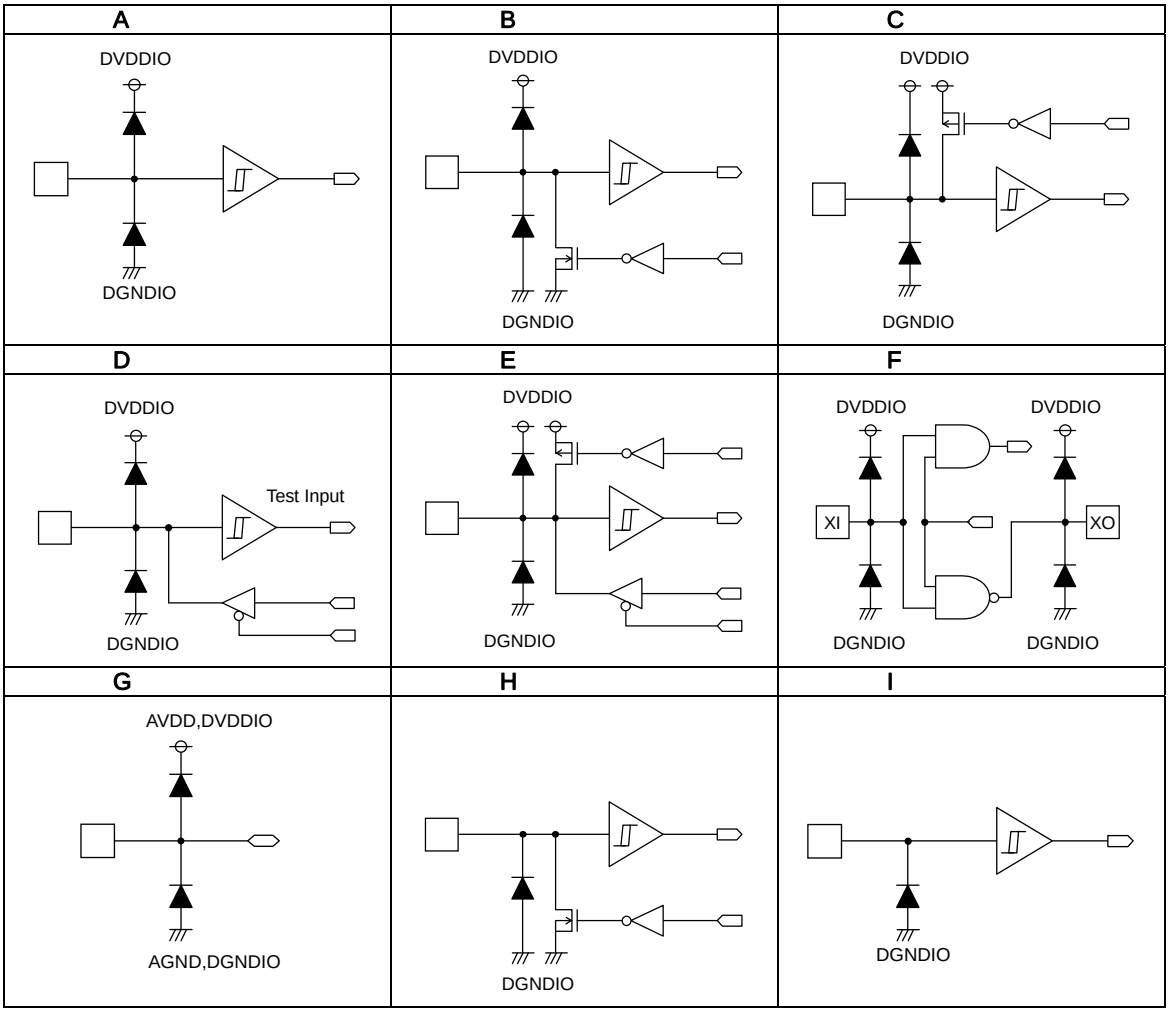

© 2012 ROHM Co., Ltd. All rights reserved.

1. Command Interface

BU9408KS2 uses I^{2}C-bus system for the command interface with a host CPU.

The register of BU9408KS2 has Write-mode and Read-mode.

BU9408KS2 specifies a slave address and 1 byte of selection address, and it performs writing and read-out.

The slave mode format of I^{2}C bus is shown below.

	MSB LSB		MSB LSB		MSB LSB		
S	Slave Address	A	Select Address	A	Data	A	P

S : Start condition

Slave Address : After the slave address (7 bits) set up by I2CADR, bit of a read-mode (H") and a write-mode (L") is attached, and a total of 8-bit data is sent. (MSB first)

A: Acknowledge An acknowledge bit is added on to each bit of data transmitted.
When data transmission is being done correctly, “L” is transmitted.
“H” transmission means there was no acknowledge.

Select Address: BU9408KS2 uses a 1-byte select address. (MSB first)

Data: Data byte, transmitted data (MSB first)

P: Stop condition

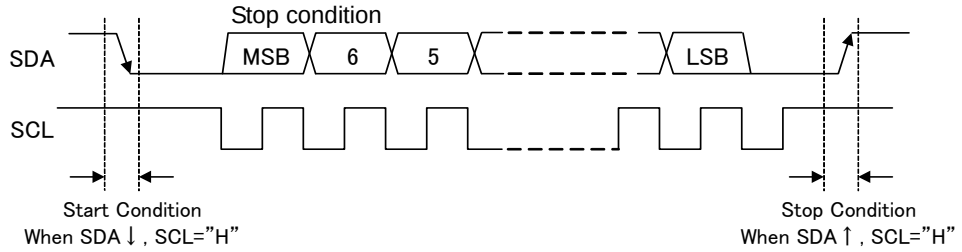

1-1. Data Write-In

S	Slave Address	A	Select Address	A	Data	A	P

: Master to Slave : Slave to Master

ADDR=0

MSB							LSB
A6	A5	A4	A3	A2	A1	A0	R/W
1	0	0	0	0	0	0	0

ADDR=1

MSB							LSB
A6	A5	A4	A3	A2	A1	A0	R/W
1	0	0	0	0	0	1	0

Setting of BU9408KS2 slave address

Terminal setting ADDR	Write-mode Slave-address
0	80h
1	82h

S	Slave Address	A	Select Address	A	Data	A	Data	A	Data	A	P
（例）	80h		20h		00h		00h		00h		

: Master to Slave : Slave to Master

© 2012 ROHM Co., Ltd. All rights reserved.

Write-in Procedure

Step	Clock	Master	Slave(BU9408KS2)	Note
1		Start Condition		
2	7	Slave Address		&h80 (&h82)
3	1	R/W (0)		
4	1		Acknowledge	
5	8	Select Address		Write-in target register: 8bit
6	1		Acknowledge	
7	8	Data		8bit write-in data
8	1		Acknowledge	
9		Stop Condition		

○When transmitting continuous data, the auto-increment function moves the select address up by one.
Repeat steps 7 and 8.

1-2. Data Read-out

During read-out, the corresponding read-out address is first written into the &hD0 address register (&h20h in the example). In the following stream, the data is read out after the slave address. Do not return an acknowledge after completing the reception.

S	Slave Address	A	Req_Addr	A	Select Address	A	P
(ex.)	80h		D0h		20h		

S	Slave Address	A	Data 1	A	Data 2	A		A	Data N	Ā	P
(ex.)	81h		**h		**h				**h		

: Master to Slave, : Slave to Master, A: With acknowledge, Ā: Without acknowledge

Read-out Procedure

Step	Clock	Master	Slave(BU9408KS2)	Note
1		Start Condition		
2	7	Slave Address		&h80 (&h82)
3	1	R/W (0)		
4	1		Acknowledge	
5	8	Req_Addr		I^2C read-out address &hD0
6	1		Acknowledge	
7	8	Select Address		Read-out target register: 8bit
8	1		Acknowledge	
9	1	Stop Condition		
10	1	Start Condition		
11	7	Slave Address		&h81 (&h83)
12	1	R/W (1)		
13	1		Acknowledge	
14	8		Data	8bit read-out data
15	1	Acknowledge		
16		Stop Condition		

○When transmitting continuous data, the auto-increment function moves up the select address by one.
Repeat steps 14 and 15.

© 2012 ROHM Co., Ltd. All rights reserved.

1-3. Control Signal Specifications

○ Electrical Characteristics and Timing for Bus Line and I/O Stage

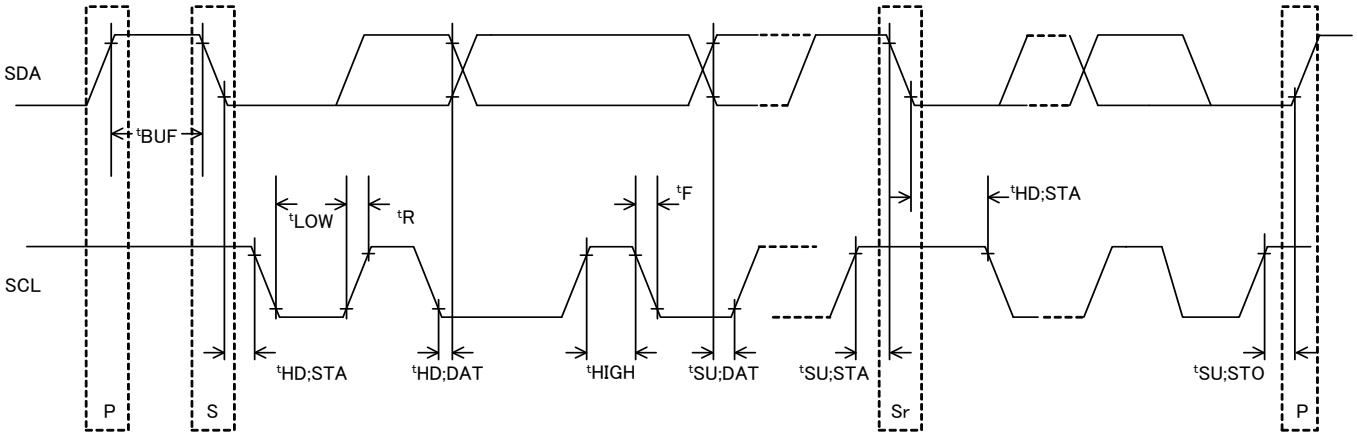

Fig.1-1: Timing Chart

Table 1-1: SDA and SCL Bus Line Characteristics (Ta=25℃ and V_{DD}=3.3V)

Parameters		Symbol	High-Speed Mode		Unit
			Min.	Max.	
1	SCL clock frequency	fSCL	0	400	kHz
2	Bus free time between “stop” condition and “start” condition	^{t}BUF	1.3	–	μS
3	Hold time (re-transmit) “start” condition. After this period, the first clock pulse is generated.	^{t}HD;STA	0.6	–	μS
4	SCL clock LOW state hold time	^{t}LOW	1.3	–	μS
5	SCL clock HIGH state hold time	^{t}HIGH	0.6	–	μS
6	Re-transmit set-up time of “start” condition	^{t}SU;STA	0.6	–	μS
7	Data hold time	^{t}HD;DAT	0[1)]	–	μS
8	Data setup time	^{t}SU;DAT	100	–	ns
9	SDA and SCL signal stand-up time	^{t}R	20+Cb	300	ns
10	SDA and SCL signal stand-down time	^{t}F	20+Cb	300	ns
11	Set-up time for “stop” condition	^{t}SU;STO	0.6	–	μS
12	Each bus line’s capacitive load	Cb	–	400	pF

The values above correspond with $V_{IH\ min}$ and $V_{IL\ max}$ levels.

1) Because the transmission device exceeds the undefined domain of the SCL fall edge, it is necessary to internally provide a minimum 300ns
hold time for the SDA signal (of $V_{IH\ min}$ of SCL signal).

The above-mentioned characteristic is a theory value in IC design and it doesn't be guaranteed by shipment inspection.
When problem occurs by any chance, we talk in good faith and correspond.
Neither terminal SCLI nor terminal SDAI correspond to 5V tolerant. Please use it within absolute maximum rating 4.5V.

© 2012 ROHM Co., Ltd. All rights reserved.

2. Data and System-clock setting

The input-and-output distribution diagram of the audio data of BU9408KS2 is shown below.

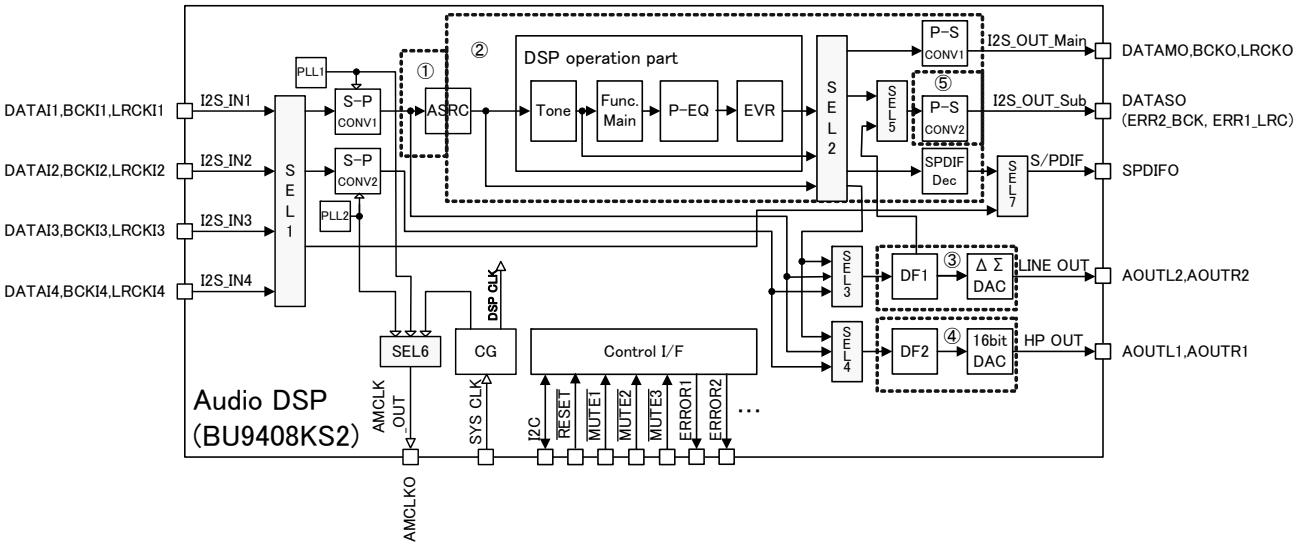

BU9408KS2 has a 4-line digital stereo input, 3-line digital stereo output and 2-line analog stereo output.
The digital data input to the DSP operation part is first changed to fs=48kHz data at the ASRC (asynchronous sampling rate converter).
DSP operation part output is changed to either I^2S format digital output, S/PDIF format digital serial output or analog output.

2-1. Input data selection to S-P Conversion 1 (SEL1)

Default = 0

Select Address	Value	Operation Description
&h03 [1:0]	0	Input data from I2S_IN1
	1	Input data from I2S_IN2
	2	Input data from I2S_IN3
	3	Input data from I2S_IN4

2-2. Input data selection to S-P Conversion 2 (SEL1)

Default = 0

Select Address	Value	Operation Description
&h03 [5:4]	0	Input data from I2S_IN1
	1	Input data from I2S_IN2
	2	Input data from I2S_IN3
	3	Input data from I2S_IN4

2-3. Output data selection P-S Conversion 1 for DATAMO terminal (SEL2)

Default = 0

Select Address	Value	Operation Description
&h04 [1:0]	0	Main data output after DSP operation
	1	Sub data output after DSP operation
	2	Data output before DSP operation

© 2012 ROHM Co., Ltd. All rights reserved.

2-4. Output data selection P-S Conversion 2 for DATASO terminal (SEL2, SEL5)

Default = 0

Select Address	Value	Operation Description
&h04 [5:4]	0	Sub data output after DSP operation
	1	Main data output after DSP operation
	2	Data output before DSP operation
	3	Data output from DF1

2-5. P-S Conversion 2 output data option (DATASO, ERR1_LRC, ERR2_BCK)

Usually, from a DATASO terminal, the result of the Sub output process of DSP is outputted to the timing (LRCKO, BCKO) which synchronized with DATAMO.

Moreover, if this output option is set up, it will enable DATAMO to output the data of DF1 as independent data from a DATASO terminal as a 3 line serial output with ERR1_LRC (LRCK) and ERR2_BCK (BCK).

This function is used when doing a line out output using external DAC.

Default = 0

Select Address	Value	Operation Description
&h0E [7]	0	Synchronous output with DATAMO (LRCKO, BCKO)
	1	Asynchronous output with DATAMO (ERR1_LRC, ERR2_BCK)

If this function is used, the monitor of the error flag from ERROR1 and ERROR2 terminal will not be made.

2-6. Output data selecting of SPDIFO terminal (SEL1, SEL7)

Default = 0

Select Address	Value	Operation Description
&h05 [3:0]	0	Data output before DSP operation
	1	Main data output after DSP operation
	2	Sub data output after DSP operation
	3	Output data from I2S_IN1 (Only data of S/PDIF form)
	4	Output data from I2S_IN2 (Only data of S/PDIF form)
	5	Output data from I2S_IN3 (Only data of S/PDIF form)
	6	Output data from I2S_IN4 (Only data of S/PDIF form)

2-7. Output data selecting DF1＋ΔΣDAC (SEL3)

Default = 0

Select Address	Value	Operation Description
&h06 [2:0]	0	Output data from S-P conversion 1 (Refer to &h03 [5:4])
	1	Output data from S-P conversion 2 (Refer to &h03 [1:0])
	2	Data output before DSP operation
	3	Main data output after DSP operation
	4	Sub data output after DSP operation

© 2012 ROHM Co., Ltd. All rights reserved.

2-8. Output data selecting DF2＋16bitDAC (SEL4)

Default = 0

Select Address	Value	Operation Description
&h06 [6:4]	0	Output data from S-P conversion 1 (Refer to &h03 [5:4])
	1	Output data from S-P conversion 2 (Refer to &h03 [1:0])
	2	Data output before DSP operation
	3	Main data output after DSP operation
	4	Sub data output after DSP operation

2-9. Output clock selecting AMCLKO terminal (SEL8)

Default = 0

Select Address	Value	Operation Description
&h07 [3:0]	0	Output the 256fs (12.288MHz) clock of an input from the XI terminal.
	1	Output the 256fs clock made from PLL1
	2	Output the 256fs clock made from PLL2
	3	Output the 512fs (24.576MHz) clock of an input from the XI terminal.
	4	Output the 512fs clock made from PLL1
	5	Output the 512fs clock made from PLL2
	6	Output the 128fs (6.144MHz) clock of an input from the XI terminal.
	7	Output the 128fs clock made from PLL1
	8	Output the 128fs clock made from PLL2

There are three system clocks used by ASRC of BU9408KS2, DSP, the P-S conversion 1, the P-S conversion 2, a SPDIF output part, DF1+sigma-delta DAC, and DF2+16bit DAC.
One is a 24.576MHz (512fs) system clock from XI terminal, and other two are a clock of 512fs made from PLL1 or PLL2.

2-10. System Clock Selecting of Input Part of ASRC (it is Used for up sampling) (Dotted line ①)

Default = 0

Select Address	Value	Operation Description
&h08 [0]	0	The 24.576MHz (512fs) system clock from the XI terminal
	1	The clock of 512fs made from PLL1 of the S-P conversion 1

2-11. The output part of ASRC (it is used for down sampling), DSP, P-S conversion 1, system clock selecting of a SPDIF output part (Dotted line ②)

Default = 0

Select Address	Value	Operation Description
&h08 [4]	0	The 24.576MHz (512fs) system clock from the XI terminal
	1	The clock of 512fs made from PLL1 of the S-P conversion 1

© 2012 ROHM Co., Ltd. All rights reserved.

2-12. System Clock Selecting of DF1＋ΔΣDAC (Dotted line ③)

Default = 0

Select Address	Value	Operation Description
&h0A [1:0]	0	The 24.576MHz (512fs) system clock from the XI terminal
	1	The clock of 512fs made from PLL1 of the S-P conversion 1
	2	The clock of 512fs made from PLL2 of the S-P conversion 2

2-13. System Clock Selecting DF2＋16bit DAC (Dotted line ④)

Default = 0

Select Address	Value	Operation Description
&h0A [5:4]	0	The 24.576MHz (512fs) system clock from the XI terminal
	1	The clock of 512fs made from PLL1 of the S-P conversion 1
	2	The clock of 512fs made from PLL2 of the S-P conversion 2

When using DATASO as an asynchronous output to DATAMO, it sets up system clock selecting of the P-S conversion 2 by this command. (Dotted line ⑤)

© 2012 ROHM Co., Ltd. All rights reserved.

3. S-P Conversion 1 and S-P Conversion 2

BU9408KS2 has two built-in serial-parallel conversion circuits. (S-P Conversion 1 and S-P Conversion 2)
S-P conversions 1 and 2 are blocks which receive 3-line serial input audio data from pins and convert it to parallel data.
Input from DATAI1, BCKI1 and LRCKI1 (pins 43, 42 and 41), DATAI2, BCKI2 and LRCKI2 (pins 46, 45, and 44), DATAI3, BCKI3 and LRCKI3 (pins 49, 48 and 47), and DATAI4, BCKI4 and LRCKI4 (pins 52, 51 and 50) are selected.
The three input formats are IIS, left-justified and right-justified. The bit clock frequency may be selected from either 64fs or 48fs, but when 48fs is selected, the input format is always right-justified. 16bit, 20bit and 24bit output may be selected for each format.
Below are the timing charts for each transfer format.

IIS Format

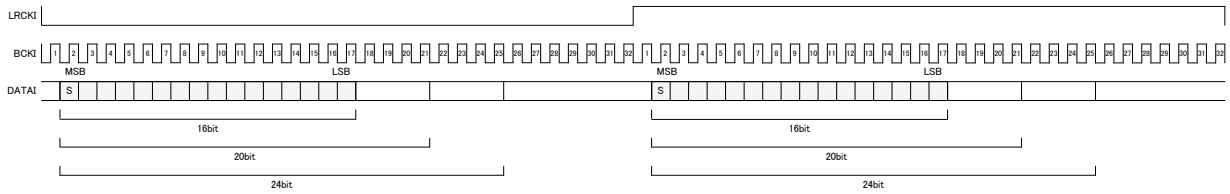

Left-Justified Format

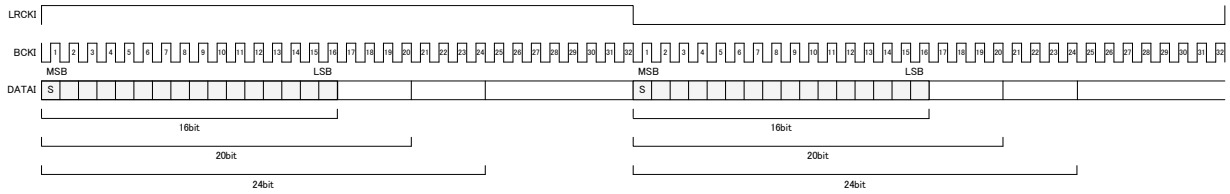

Right-Justified Format

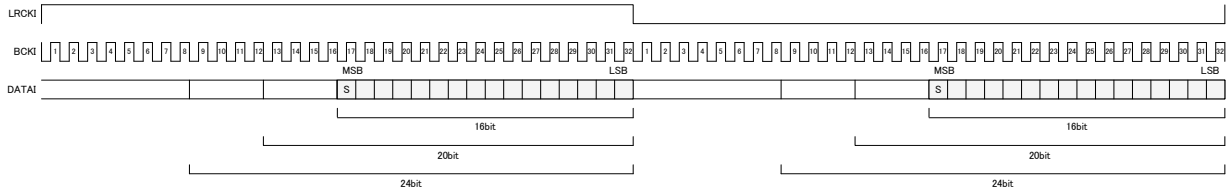

48fs

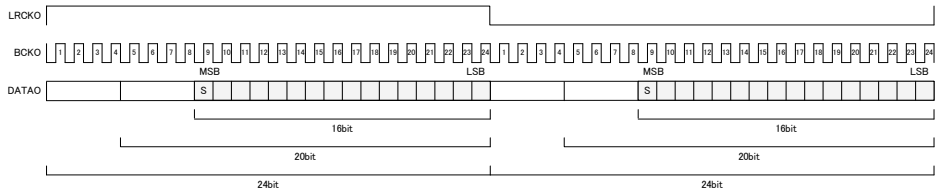

© 2012 ROHM Co., Ltd. All rights reserved.

3-1. Bit Clock Frequency Configuration for 3-line Serial Input

Default = 0

Select Address	Value	Operation Description
S-P Conversion 1 &h0B [4]	0	64fs format
S-P Conversion 2 &h0C [4]	1	48fs format

3-2. Format Configuration for 3-line Serial Input

Default = 0

Select Address	Value	Operation Description
S-P Conversion 1 &h0B [3:2]	0	IIS format
S-P Conversion 2 &h0C [3:2]	1	Left-justified format
	2	Right-justified format

3-3. Data Bit Width Configuration for 3-line Serial Input

Default = 0

Select Address	Value	Operation Description
S-P Conversion 1 &h0B [1:0]	0	16 bit
S-P Conversion 2 &h0C [1:0]	1	20 bit
	2	24 bit

© 2012 ROHM Co., Ltd. All rights reserved.

4. Digital Sound Processing (DSP)

BU9408KS2's Digital Sound Processing (DSP) consists of special hardware most suitable to Thin TV.
BU9408KS2 uses this special DSP to perform the following processing.
Prescaler, DC cut HPF, Channel Mixer, P^2Volume (Perfect Pure Volume), BASS, MIDDLE, TREBLE,
Pseudo Stereo, Surround, P^2Bass, P^2Treble, 7 Band Parametric Equalizer, Master Volume, L/R Balance, PostScaler, Output Clipper, Sub-woofer output Processing.

DSP Outline and Signal Flow

Data width:	32 bit (DATA RAM)
Machine cycle:	40.7ns (512fs, fs=48kHz)
Multiplier:	32×24 → 56 bit
Adder:	32＋32 → 32 bit
Data RAM:	256×32 bit
Coefficient RAM:	128×24 bit
Sampling frequency:	fs=48kHz
Master clock:	512fs (24.576MHz, fs=48kHz)

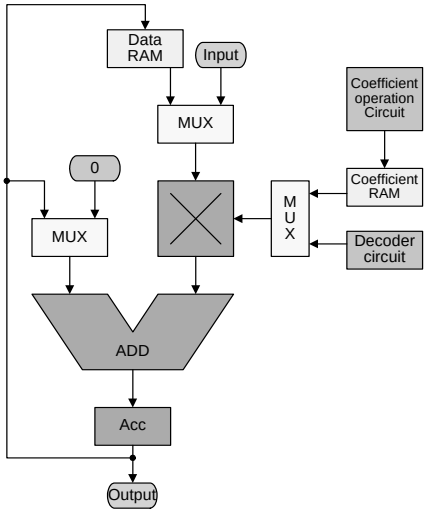

Digital signal from 16bit to 24bit is inputted to DSP,
and it is extended by +8bit (+42dB) as overflow margin on the upper side.
The clip process is performed in DSP when the process exceeding this range is performed.

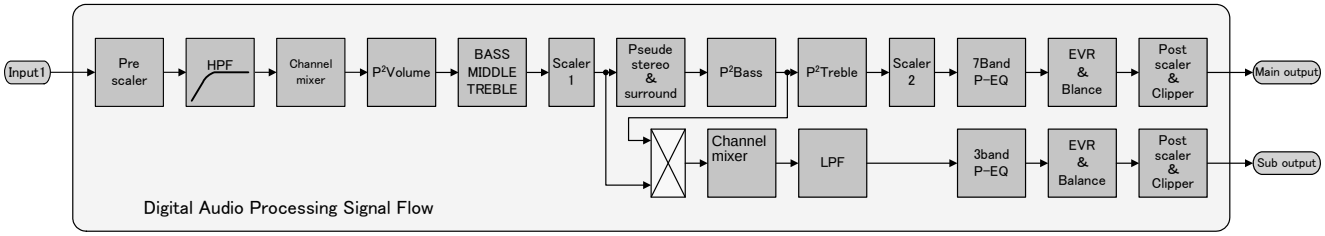

4-1. Prescaler

When digital signal is inputted to audio DSP, if the level is full scale input and the process of surround or equalizer is performed, then it overflows, therefore the input gain is adjusted by prescaler.
Adjustable range is +24dB to -103dB and can be set by the step of 0.5dB.
Prescaler does not incorporate the smooth transition function.

Default = 30h

Select Address	Operational explanation
&h20 [7:0]	

command	gain
00	+24dB
01	+23.5dB
⋮	⋮
30	0dB
31	−0.5dB
32	−1dB
⋮	⋮
FE	−103dB
FF	−∞

© 2012 ROHM Co., Ltd. All rights reserved.

4-2. DC cut HPF

The DC offset component of digital signal inputted to the audio DSP is cut by this HPF.

The cut off frequency (fc) of HPF is 1Hz, and first-order filter is used.

Default = 0

Select Address	Value	Operational explanation
&h21 [0]	0	Not using the DC cut HPF
	1	Using the DC cut HPF

4-3. Channel mixer

It performs the setting of mixing the sounds of left channel & right channel of digital signal inputted to the audio DSP.

Here the stereo signal is made to be monaural.

The data inputted to Lch of DSP is mixed.

Default = 0

Select Address	Value	Operational explanation
&h22 [7:6]	0	Inputting the Lch data
	1	Inputting the data of (Lch + Rch) / 2
	2	Inputting the data of (Lch + Rch) / 2
	3	Inputting the Rch data

The data inputted to Rch of DSP is mixed.

Default = 0

Select Address	Value	Operational explanation
&h22 [5:4]	0	Inputting the Rch data
	1	Inputting the data of (Lch + Rch) / 2
	2	Inputting the data of (Lch + Rch) / 2
	3	Inputting the Lch data

© 2012 ROHM Co., Ltd. All rights reserved.

4-4. P^2Volume （Perfect Pure Volume）

There are some scenes in which sound suddenly becomes large like plosive sound in TV Commercial or Movie.
P^2Volume function automatically controls the volume and adjusts the output level.
In addition, it also adjusts in such a way that a whispery sound can be heard easily.

P^2Volume function operates in the fields of (1), (2) & (3) divided according to input level.

(1) at the time of $V_{I\,inf}(-\infty)\sim V_{I\,min}$

Noise is prevented from being lifted by P^2Volume function.

(2) When input level is over $V_{I\,min}$ and output is below V_{Omax}

$V_O = V_I + \alpha$

α： Lifting the Whole output level by the offset value α

(3) When output level V_O exceeds V_{Omax}

$V_O = K \cdot V_I + \alpha$

K： Slope for suppressing of D range （P2V_K）

It is also possible to set an output level constant.

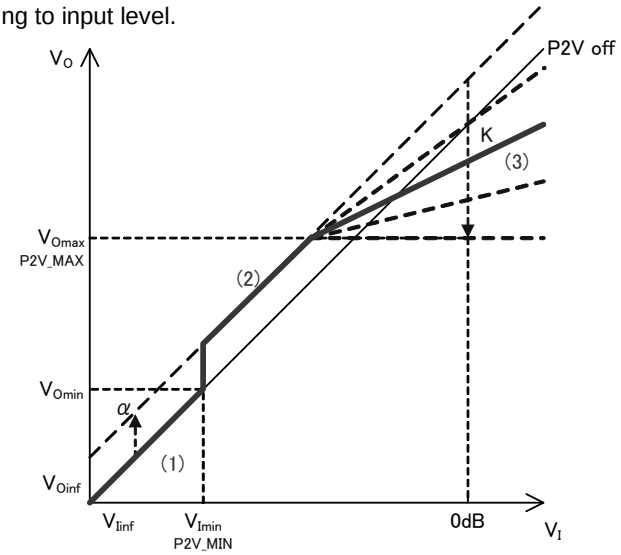

Selection of using the P^2Volume function.

Default = 0

Select Address	Value	Operational explanation
&h33 [7]	0	Not using the P^2Volume function
	1	Using the P^2Volume function

Setting of $V_{I\,min}$

In order to cancel that noise etc. is lifted by P^2Volume, the P2V_MIN sets the minimum level at which (to the minimum) the P^2Volume functions.

command

Default = 00h

Select Address	Operational explanation
&h34 [4:0]	

command	gain	command	gain	command	gain	コマンド値	ゲイン
00	−∞	08	−44dB	10	−60dB	18	−76dB
01	−30dB	09	−46dB	11	−62dB	19	−78dB
02	−32dB	0A	−48dB	12	−64dB	1A	−80dB
03	−34dB	0B	−50dB	13	−66dB	1B	−82dB
04	−36dB	0C	−52dB	14	−68dB	1C	−84dB
05	−38dB	0D	−54dB	15	−70dB	1D	−86dB
06	−40dB	0E	−56dB	16	−72dB	1E	−88dB
07	−42dB	0F	−58dB	17	−74dB	1F	−90dB

Setting of $V_{O\,max}$

P2V_MAX sets the output suppression level. It represents the output level $V_{O\,max}$ at the time of input level V_I = 0dB in the case of setting of P2V_K = “0h” (slope is 0).

Default = 00h

Select Address	Operational explanation
&h35 [4:0]	

command	gain	command	gain	command	gain	command	gain
00	0dB	08	−8dB	10	−16dB	18	−24dB
01	−1dB	09	−9dB	11	−17dB	19	−25dB
02	−2dB	0A	−10dB	12	−18dB	1A	−26dB
03	−3dB	0B	−11dB	13	−19dB	1B	−27dB
04	−4dB	0C	−12dB	14	−20dB	1C	−28dB
05	−5dB	0D	−13dB	15	−21dB	1D	−29dB
06	−6dB	0E	−14dB	16	−22dB	1E	−30dB
07	−7dB	0F	−15dB	17	−23dB	1F	−

© 2012 ROHM Co., Ltd. All rights reserved.

Setting of K

P2V_K sets the slop of D range. It sets the P2V_MAX = “1Eh” (-30dB) and represents the output level V_{Omax} at the time of input level V_I = 0dB.

Default = 00h

Select Address	Operational explanation
&h36 [3:0]	

command	gain	comman	gain
0	−30dB	8	−14dB
1	−28dB	9	−12dB
2	−26dB	A	−10dB
3	−24dB	B	−8dB
4	−22dB	C	−6dB
5	−20dB	D	−4dB
6	−18dB	E	−2dB
7	−16dB	F	0dB

Setting of α

P2V_OFS makes small voice easy to be heard because the whole output level is lifted.

Default = 00h

Select Address	Operational explanation
&h37 [4:0]	

command	gain	command	gain	command	gain	command	gain
00	0dB	08	+8dB	10	+16dB	18	+24dB
01	+1dB	09	+9dB	11	+17dB	19	−
02	+2dB	0A	+10dB	12	+18dB	1A	−
03	+3dB	0B	+11dB	13	+19dB	1B	−
04	+4dB	0C	+12dB	14	+20dB	1C	−
05	+5dB	0D	+13dB	15	+21dB	1D	−
06	+6dB	0E	+14dB	16	+22dB	1E	−
07	+7dB	0F	+15dB	17	+23dB	1F	−

Setting 1 of transition time at the time of attack

A_RATE is the setting of transition time when the state of P^2Volume function is transited to (2)→(3).

Default = 0

Select Address	Operational explanation
&h38 [6:4]	

command	A_RATE time	command	A_RATE time
0	1ms	4	5ms
1	2ms	5	10ms
2	3ms	6	20ms
3	4ms	7	40ms

Setting 1 of transition time at the time of recovery

R_RATE is the setting of transition time when the state of P^2Volume function is transited to (3)→(2).

Default = 0h

Select Address	Operational explanation
&h38 [3:0]	

command	R_RATE time	command	R_RATE time
0	0.25s	8	3s
1	0.5s	9	4s
2	0.75s	A	5s
3	1s	B	6s
4	1.25s	C	7s
5	1.5s	D	8s
6	2s	E	9s
7	2.5s	F	10s

© 2012 ROHM Co., Ltd. All rights reserved.

Explanation of A_RATE,R_RATE(field transition of (2)<->(3))

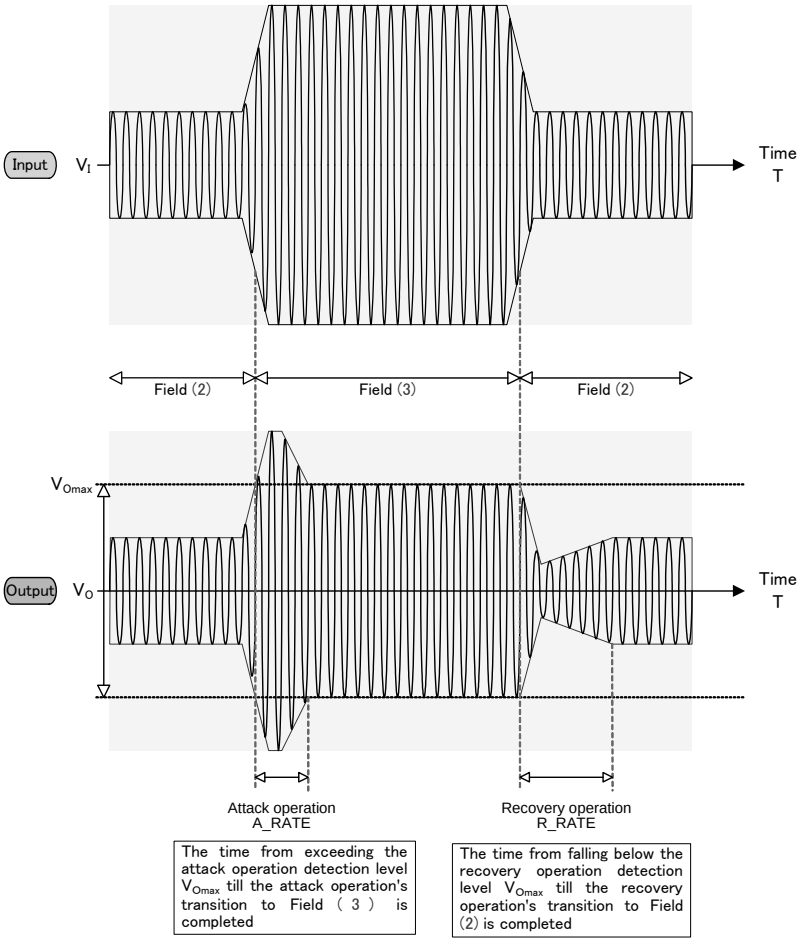

Setting 1 of attack detection time

A_TIME is the setting of the initiation of P^2Volume function's transition operation. If output level at the time of transiting to (2)→(3) continues for more then A_TIME time in succession, then the state transition of P^2Volume is started.

Default = 0

Select Address	Operational explanation
&h39 [6:4]	

command	A_TIME	command	A_TIME
0	0.5ms	4	3ms
1	1ms	5	4ms
2	1.5ms	6	5ms
3	2ms	7	6ms

Setting 1 of recovery detection time

R_TIME is the setting of the initiation of P^2Volume function's transition operation. If output level at the time of transiting to (3)→(2) continues for more then R_TIME time in succession, then the state transition of P^2Volume is started.

Default = 0

Select Address	Operational explanation
&h39 [2:0]	

command	R_TIME	command	R_TIME
0	50ms	4	300ms
1	100ms	5	400ms
2	150ms	6	500ms
3	200ms	7	600ms

© 2012 ROHM Co., Ltd. All rights reserved.

Explanation of A_RATE_Low,R_RATE_Low(field transition of (1)<->(2))

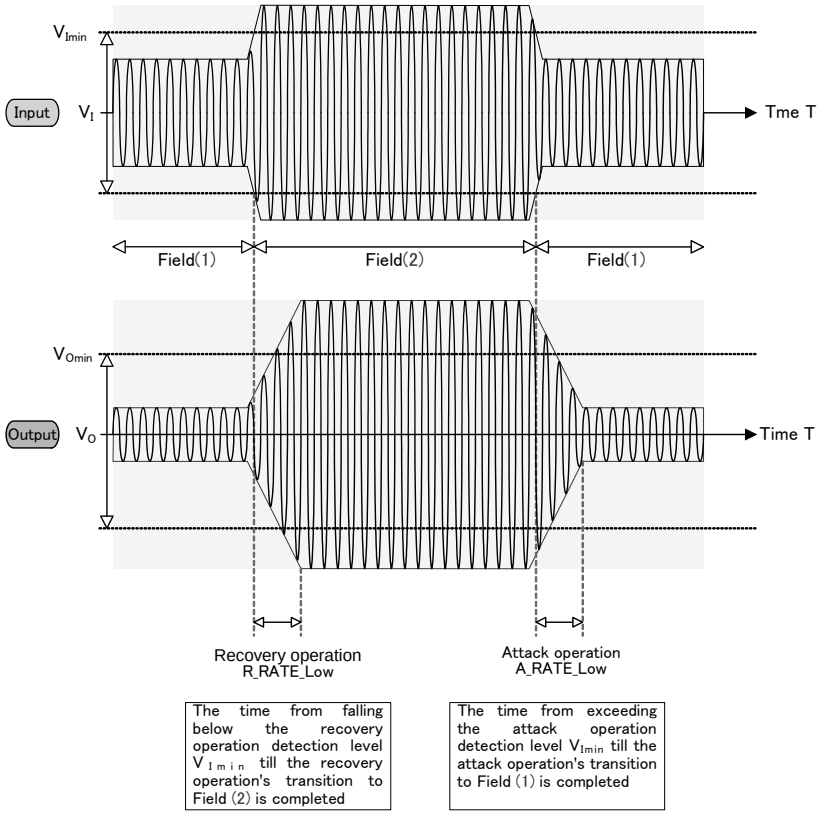

Setting 2 of the transition time at the time of attack

A_RATE_LOW is the setting of transition time when the state of P^2Volume function is transited to (2)→(1).

Default = 0

Select Address	Operational explanation
&h3A [6:4]	

Command	A_RATE_LOW Time	Command	A_RATE_LOW Time
0	1ms	4	5ms
1	2ms	5	10ms
2	3ms	6	20ms
3	4ms	7	40ms

Setting 2 of the transition time at the time of recovery

R_RATE_LOW is the setting of transition time when the state of P^2Volume function is transited to (1)→(2).

Default = 0 (Caution) This setting value is not reflected in BU9408KS2. The value of &h38 [3:0] is set up.

Select Address	Operational explanation
&h3A [2:0]	

Command	R_RATE_LOW Time	Command	R_RATE_LOW Time
0	1ms	4	5ms
1	2ms	5	10ms
2	3ms	6	20ms
3	4ms	7	40ms

Setting 2 of attack recovery detection time

AR_TIME_LOW is the setting of the initiation of P^2Volume function's transition operation. If output level at the time of transiting to (1)<->(2) continues for more then AR_TIME time in succession, then the state transition of P^2Volume is started.

Default = 0

Select Address	Operational explanation
&h3B [6:4]	

Command	AR_TIME_LOW	Command	AR_TIME_LOW
0	0.5ms	4	3ms
1	1ms	5	4ms
2	1.5ms	6	5ms
3	2ms	7	6ms

© 2012 ROHM Co., Ltd. All rights reserved.

○Pulse sound detection and High-speed recovery function（functioning only at the time of transition of (2)<->(3)）

P^2Volume function makes the P^2Volume also compatible with large pulse sounds (clapping of hands, fireworks & shooting etc.) in addition to normal P^2Volume operation. When large pulse sound is inputted, attack operation (A_RATE) or recovery operation (R_RATE) is performed at 4 or 8 times the speed of normal attack operation or recovery operation.

Selection of using the pulse sound detection function.

Default = 0

Select Address	Value	Operational explanation
&h3BC [7]	0	Not using of pulse sound detection function
	1	Using of pulse sound detection function

Selection of operating times of Recovery Time (R_RATE) in the case of using the pulse sound detection function

Default = 0

Select Address	Value	Operational explanation
&h3C [3]	0	Operating at 4 times the speed corresponding to the setting time of R_RATE
	1	Operating at 8 times the speed corresponding to the setting time of R_RATE

Selection of pulse sound detection time

Default = 0

Select Address	Operational explanation
&h3C [6:4]	

Command	Detection time	Command	Detection time
0	100us	4	2ms
1	200us	5	5ms
2	400us	6	10ms
3	1ms	7	20ms

Setting of operating level of pulse sound detection function

Operation is started by the difference between the presently detected value and the last value as a standard.

Default = 0

Select Address	Operational explanation
&h3C [2:0]	

Command	Detection level	Command	Detection level
0	Over 1.002	4	Over 0.251
1	Over 0.709	5	Over 0.178
2	Over 0.502	6	Over 0.126
3	Over 0.355	7	Over 0.089

Example） Present detection level A : -10dB → 10^(-10/20) = 0.32

The last detection level B : -30dB → 10^(-30/20) = 0.032

A – B : 0.32 – 0.032 = 0.288 → Operating by the setting of command ”4” to ”7”.

© 2012 ROHM Co., Ltd. All rights reserved.

4-5. BASS

BASS of TONE Control can use Peaking filter or Low-shelf filter.

The setting is converted, in the IC, into digital filter's coefficients (b0, b1, b2, a1, a2)by selecting the F_0, Q and Gain, and transmitted to coefficient RAM. The switching shock noise at the time of alteration of setting can be prevented by the smooth transition function.

○BASS Control

Selection of filter types

Default = 0

Select Address	Value	Operational explanation
&h40 [7]	0	Peaking filter
	1	Low-shelf filter

Selection of smooth transition function

Default = 0

Select Address	Value	Operational explanation
&h40 [6]	0	Using BASS smooth transition function
	1	Not BASS using smooth transition function

Selection of smooth transition time

Default = 0

Select Address	Value	Operational explanation
&h40 [5:4]	0	21.4ms
	1	10.7ms
	2	5.4ms
	3	2.7ms

Setting of smooth transition start

In the case of using the smooth transition function, after being transmitted, by the &h40[0] command, to the coefficient RAM for smooth transition, the alteration of BASS's coefficients is completed by using this command.

Default = 0

Select Address	Value	Operational explanation
&h4C [0]	0	BASS smooth transition stop
	1	BASS smooth transition start

What is necessary is the time of waiting, which is more than the time selected by the setting of Bass smooth transition time, from the time the BASS smooth transition start (&h4C[0] = "1") is executed until the following command is sent. Please make sure to perform the Bass smooth transition stop (&h4C[0] = "0") after the smooth transition is completed.

© 2012 ROHM Co., Ltd. All rights reserved.

Setting of the Start of transmitting to coefficient RAM

In the case of using the smooth transition, it is transmitted to the coefficient RAM for smooth transition. In the case of not using of the smooth transition, it is transmitted directly to the coefficient RAM.

Default = 0

Select Address	Value	Operational explanation
&h40 [0]	0	BASS coefficient transmission stop
	1	BASS coefficient transmission start

Selection of frequency (F_0)

Default = 0Eh

Select Address	Operational explanation
&h41 [5:0]	

Command	Frequency	Command	Frequency	Command	Frequency	Command	Frequency	Command	Frequency	Command	Frequency	Command	Frequency	Command	Frequency
00	20Hz	08	50Hz	10	125Hz	18	315Hz	20	800Hz	28	2kHz	30	5kHz	38	12.5kHz
01	22Hz	09	56Hz	11	140Hz	19	350Hz	21	900Hz	29	2.2kHz	31	5.6kHz	39	14kHz
02	25Hz	0A	63Hz	12	160Hz	1A	400Hz	22	1kHz	2A	2.5kHz	32	6.3kHz	3A	16kHz
03	28Hz	0B	70Hz	13	180Hz	1B	450Hz	23	1.1kHz	2B	2.8kHz	33	7kHz	3B	18kHz
04	32Hz	0C	80Hz	14	200Hz	1C	500Hz	24	1.25kHz	2C	3.15kHz	34	8kHz	3C	20kHz
05	35Hz	0D	90Hz	15	220Hz	1D	560Hz	25	1.4kHz	2D	3.5kHz	35	9kHz	3D	–
06	40Hz	0E	100Hz	16	250Hz	1E	630Hz	26	1.6kHz	2E	4kHz	36	10kHz	3E	–
07	45Hz	0F	110Hz	17	280Hz	1F	700Hz	27	1.8kHz	2F	4.5kHz	37	11kHz	3F	–

Selection of quality factor (Q)

Default = 4h

Select Address	Operational explanation
&h42 [3:0]	

Command	Quality factor	Command	Quality factor
0	0.33	8	2.2
1	0.43	9	2.7
2	0.56	A	3.3
3	0.75	B	3.9
4	1.0	C	4.7
5	1.2	D	5.6
6	1.5	E	6.8
7	1.8	F	8.2

Selection of Gain

Default = 40h

Select Address	Operational explanation
&h43 [6:0]	

Command	Gain
1C	−18dB
⋮	⋮
3E	−1dB
3F	−0.5dB
40	0dB
41	+0.5dB
42	+1dB
⋮	⋮
64	+18dB

If the coefficient of b0, b1, b2, a1, and a2 exceeds ±4, it may not operate normally.

© 2012 ROHM Co., Ltd. All rights reserved.

4-6. MIDDLE

MIDDLE of TONE Control uses Peaking filter.

The setting is converted, in the IC, into digital filter's coefficients (b0, b1, b2, a1, a2)by selecting the F, Q and Gain, and transmitted to coefficient RAM. The switching shock noise at the time of alteration of setting can be prevented by the smooth transition function.

○MIDDLE Control

Selection of smooth transition function

Default = 0

Select Address	Value	Operational explanation
&h44 [6]	0	Using MIDDLE smooth transition function
	1	Not MIDDLE using smooth transition function

Selection of smooth transition time

Default = 0

Select Address	Value	Operational explanation
&h44 [5:4]	0	21.4ms
	1	10.7ms
	2	5.4ms
	3	2.7ms

Setting of smooth transition start

In the case of using the smooth transition function, after being transmitted, by the &h44[0] command, to the coefficient RAM for smooth transition, the alteration of MIDDLE's coefficients is completed by using this command.

Default = 0

Select Address	Value	Operational explanation
&h4C [1]	0	MIDDLE smooth transition stop
	1	MIDDLE smooth transition start

What is necessary is the time of waiting, which is more than the time selected by the setting of MIDDLE smooth transition time, from the time the MIDDLE smooth transition start (&h4C[1] = "1") is executed until the following command is sent. Please make sure to perform the MIDDLE smooth transition stop (&h4C[1] = "0") after the smooth transition is completed.

Setting of the Start of transmitting to coefficient RAM

In the case of using the smooth transition, it is transmitted to the coefficient RAM for smooth transition. In the case of not using of the smooth transition, it is transmitted to the direct coefficient RAM.

Default = 0

Select Address	Value	Operational explanation
&h44 [0]	0	MIDDLE coefficient transmission stop
	1	MIDDLE coefficient transmission start

© 2012 ROHM Co., Ltd. All rights reserved.

Selection of frequency (F_0)

Default = 0Eh

Select Address	Operational explanation
&h45 [5:0]	

Command	Frequency	Command	Frequency	Command	Frequency	Command	Frequency	Command	Frequency	Command	Frequency	Command	Frequency	Command	Frequency
00	20Hz	08	50Hz	10	125Hz	18	315Hz	20	800Hz	28	2kHz	30	5kHz	38	12.5kHz
01	22Hz	09	56Hz	11	140Hz	19	350Hz	21	900Hz	29	2.2kHz	31	5.6kHz	39	14kHz
02	25Hz	0A	63Hz	12	160Hz	1A	400Hz	22	1kHz	2A	2.5kHz	32	6.3kHz	3A	16kHz
03	28Hz	0B	70Hz	13	180Hz	1B	450Hz	23	1.1kHz	2B	2.8kHz	33	7kHz	3B	18kHz
04	32Hz	0C	80Hz	14	200Hz	1C	500Hz	24	1.25kHz	2C	3.15kHz	34	8kHz	3C	20kHz
05	35Hz	0D	90Hz	15	220Hz	1D	560Hz	25	1.4kHz	2D	3.5kHz	35	9kHz	3D	–
06	40Hz	0E	100Hz	16	250Hz	1E	630Hz	26	1.6kHz	2E	4kHz	36	10kHz	3E	–
07	45Hz	0F	110Hz	17	280Hz	1F	700Hz	27	1.8kHz	2F	4.5kHz	37	11kHz	3F	–

Selection of quality factor (Q)

Default = 4h

Select Address	Operational explanation
&h46 [3:0]	

Command	Quality factor	Command	Quality factor
0	0.33	8	2.2
1	0.43	9	2.7
2	0.56	A	3.3
3	0.75	B	3.9
4	1.0	C	4.7
5	1.2	D	5.6
6	1.5	E	6.8
7	1.8	F	8.2

Selection of Gain

Default = 40h

Select Address	Operational explanation
&h47 [6:0]	

Command	Gain
1C	−18dB
⋮	⋮
3E	−1dB
3F	−0.5dB
40	0dB
41	+0.5dB
42	+1dB
⋮	⋮
64	+18dB

If the coefficient of b0, b1, b2, a1, and a2 exceeds ±4, it may not operate normally.

© 2012 ROHM Co., Ltd. All rights reserved.

4-7. TREBLE

TREBLE of TONE Control can use Peaking filter or High-shelf filter.

The setting is converted, in the IC, into digital filter's coefficients (b0, b1, b2, a1, a2) by selecting the F_0, Q and Gain, and transmitted to coefficient RAM. The switching shock noise at the time of alteration of setting can be prevented by the smooth transition function.

○TREBLE Control

Selection of filter types

Default = 0

Select Address	Value	Operational explanation
&h48 [7]	0	Peaking filter
	1	High-shelf filter

Selection of smooth transition function

Default = 0

Select Address	Value	Operational explanation
&h48 [6]	0	Using smooth transition function
	1	Not using smooth transition function

Selection of smooth transition time

Default = 0

Select Address	Value	Operational explanation
&h48 [5:4]	0	21.4ms
	1	10.7ms
	2	5.4ms
	3	2.7ms

Setting of smooth transition start

In the case of using the smooth transition function, after being transmitted, by the &h48[0] command, to the coefficient RAM for smooth transition, the alteration of TREBLE's coefficients is completed by using this command.

Default = 0

Select Address	Value	Operational explanation
&h4C [2]	0	TREBLE smooth transition stop
	1	TREBLE smooth transition start

What is necessary is the time of waiting, which is more than the time selected by the setting of TREBLE smooth transition time, from the time the TREBLE smooth transition start (&h4C[2] = "1") is executed until the following command is sent. Please make sure to perform the TREBLE smooth transition stop (&h4C[2] = "0") after the smooth transition is completed.

© 2012 ROHM Co., Ltd. All rights reserved.

Setting of the Start of transmitting to coefficient RAM

In the case of using the smooth transition, it is transmitted to the coefficient RAM for smooth transition. In the case of not using of the smooth transition, it is transmitted to the direct coefficient RAM.

Default = 0

Select Address	Value	Operational explanation
&h48 [0]	0	TREBLE coefficient transmission stop
	1	TREBLE coefficient transmission start

Selection of frequency (F_0)

Default = 0Eh

Select Address	Operational explanation
&h49 [5:0]	

Command	Frequency	Command	Frequency	Command	Frequency	Command	Frequency	Command	Frequency	Command	Frequency	Command	Frequency	Command	Frequency
00	20Hz	08	50Hz	10	125Hz	18	315Hz	20	800Hz	28	2kHz	30	5kHz	38	12.5kHz
01	22Hz	09	56Hz	11	140Hz	19	350Hz	21	900Hz	29	2.2kHz	31	5.6kHz	39	14kHz
02	25Hz	0A	63Hz	12	160Hz	1A	400Hz	22	1kHz	2A	2.5kHz	32	6.3kHz	3A	16kHz
03	28Hz	0B	70Hz	13	180Hz	1B	450Hz	23	1.1kHz	2B	2.8kHz	33	7kHz	3B	18kHz
04	32Hz	0C	80Hz	14	200Hz	1C	500Hz	24	1.25kHz	2C	3.15kHz	34	8kHz	3C	20kHz
05	35Hz	0D	90Hz	15	220Hz	1D	560Hz	25	1.4kHz	2D	3.5kHz	35	9kHz	3D	–
06	40Hz	0E	100Hz	16	250Hz	1E	630Hz	26	1.6kHz	2E	4kHz	36	10kHz	3E	–
07	45Hz	0F	110Hz	17	280Hz	1F	700Hz	27	1.8kHz	2F	4.5kHz	37	11kHz	3F	–

Selection of quality factor (Q)

Default = 4h

Select Address	Operational explanation
&h4A [3:0]	

Command	Quality factor	Command	Quality factor
0	0.33	8	2.2
1	0.43	9	2.7
2	0.56	A	3.3
3	0.75	B	3.9
4	1.0	C	4.7
5	1.2	D	5.6
6	1.5	E	6.8
7	1.8	F	8.2

Selection of Gain

Default = 40h

Select Address	Operational explanation
&h4B [6:0]	

Command	Gain
1C	−18dB
⋮	⋮
3E	−1dB
3F	−0.5dB
40	0dB
41	+0.5dB
42	+1dB
⋮	⋮
64	+18dB

If the coefficient of b0, b1, b2, a1, and a2 exceeds ±4, it may not operate normally.

© 2012 ROHM Co., Ltd. All rights reserved.

4-8. Scaler 1

Scaler adjusts the gain in order to prevent the overflow in DSP.
Adjustable range is +24dB to -103dB and can be set by the step of 0.5dB.
Scaler 1 does not incorporate the smooth transition function.

Default = 30h

Select Address	Operational explanation
&h24 [7:0]	

Command	Gain
00	+24dB
01	+23.5dB
⋮	⋮
30	0dB
31	−0.5dB
32	−1dB
⋮	⋮
FE	−103dB
FF	−∞

4-9. Pseudo stereo

The sense of stereo is reproduced by signal processing of monaural voice.

Selection of filter effects of pseudo stereo

Default = 0

Select Address	Value	Operational explanation
&h71 [1:0]	0	Not using of pseudo stereo
	1	Gain is set as "high"
	2	Gain is set as "low"

If combined with the Surround's setting of ON (&h70[7] = 1), it will become even wider.

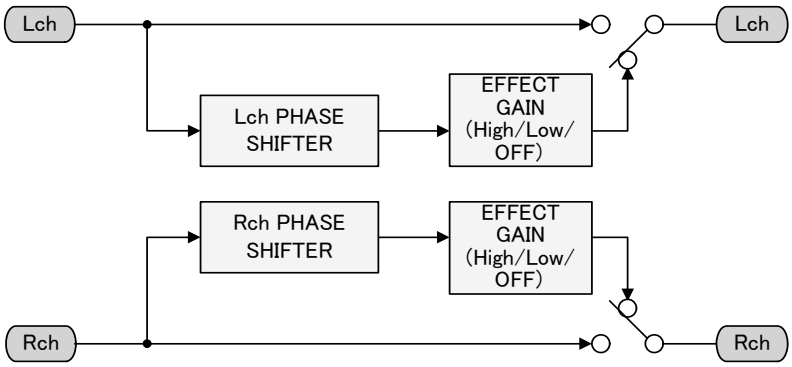

4-10. Surround (Matrix Surround 3D)

It realizes the Surround with little feeling of fatigue even after wide seat spot and long-time watching & listening to. It reproduces the feeling of broadening of the natural sounds in medium & high bands and realizes the sound field that do no damage to the feeling of locating of the vocal.
If loop is used, then the number of stages of phase shifter can be increased in a pseudo way.

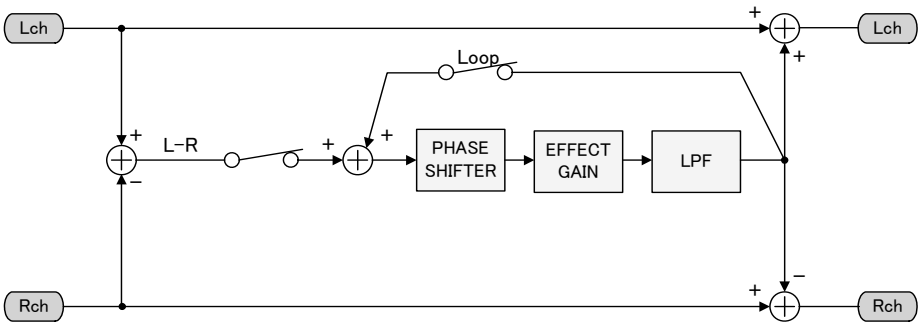

© 2012 ROHM Co., Ltd. All rights reserved.

ON/OFF of Surround function

Default = 0

Select Address	Value	Operational explanation
&h70 [7]	0	Turning the Surround effect OFF
	1	Turning the Surround effect ON

Setting of using the LOOP

Default = 0

Select Address	Value	Operational explanation
&h70 [5]	0	Not using of LOOP
	1	Using of LOOP

Setting of Surround gain

Default = Fh

Select Address	Operational explanation
&h70 [3:0]	

Command	Gain	Command	Gain
0	0dB	8	−8dB
1	−1dB	9	−9dB
2	−2dB	A	−10dB
3	−3dB	B	−11dB
4	−4dB	C	−12dB
5	−5dB	D	−13dB
6	−6dB	E	−14dB
7	−7dB	F	−15dB

© 2012 ROHM Co., Ltd. All rights reserved.

4-11. P^2Bass (Perfect Pure Bass: Deep Bass Equalizer)

It is the deep bass equalizer making it possible that even thin-screen TV, by which the enclosure of speaker is restricted, can reproduce the real sound close to powerful deep bass & original sound.

Solid & clear deep bass with little feeling of distortion is realized. Even boosting of bass does not interfere with vocal band, therefore rich and natural deep band is realized.

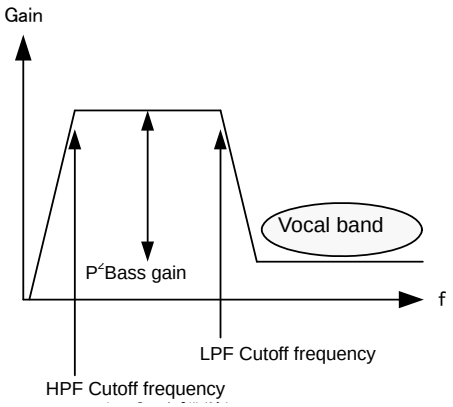

ON/OFF of P^2Bass function

Default = 0

Select Address	Value	Operational explanation
&h73 [7]	0	Not using of P^2Bass function
	1	Using of P^2Bass function

Setting of P^2Bass smooth transition time

Default = 0

Select Address	Value	Operational explanation
&h73 [3:2]	0	21.4ms
	1	10.7ms
	2	5.4ms
	3	2.7ms

P^2Bass smooth transition control

Default = 0

Select Address	Value	Operational explanation
&h77 [1:0]	0	P^2Bass smooth transition stop
	1	Setting of the values into Coefficient RAM for P^2Bass smooth transition
	2	P^2Bass smooth transition start

What is necessary is the time of waiting, which is more than the time selected by the setting of P^2Bass smooth transition time, from the time the P^2Bass smooth transition start (&h77[1:0] = “2”) is executed until the following command is sent. Please make sure to perform the P^2Bass smooth transition stop (&h77[1:0] = “0”) after the smooth transition is completed.

© 2012 ROHM Co., Ltd. All rights reserved.

Setting of P^2Bass deep bass gain

Default = 00h

Select Address	Operational explanation
&h74 [7:4]	

Command	Gain	Command	Gain
0	0dB	8	+8dB
1	+1dB	9	+9dB
2	+2dB	A	+10dB
3	+3dB	B	+11dB
4	+4dB	C	+12dB
5	+5dB	D	+13dB
6	+6dB	E	+14dB
7	+7dB	F	+15dB

Setting of P^2Bass HPF cutoff frequency

Default = 0

Select Address	Value	Operational explanation
&h74 [3:2]	0	60Hz
	1	80Hz
	2	100Hz
	3	120Hz

Setting of P^2Bass LPF cutoff frequency

Default = 0

Select Address	Value	Operational explanation
&h74 [1:0]	0	120Hz
	1	160Hz
	2	200Hz
	3	240Hz

ON/OFF of pseudo bass function

It can contribute to bass emphasis effect caused by pseudo bass. And it can also be used independently.

Default = 0

Select Address	Value	Operational explanation
&h72 [7]	0	Not using of pseudo bass function
	1	Using of pseudo bass function

Setting of pseudo bass gain

Default = 00h

Select Address	Operational explanation
&h72 [6:4]	

Command	Gain	Command	Gain
0	−4dB	4	+4dB
1	−2dB	5	+6dB
2	0dB	6	+8dB
3	+2dB	7	+10dB

© 2012 ROHM Co., Ltd. All rights reserved.

4-12. P^2Treble (Perfect Pure Treble: Medium・High-band equalizer)

It realizes good Clearness, sound stretch, and clear-cut manner.

It realizes such an effect that the sound is raised and can be heard when speaker is located on the underside of a device.

ON/OFF of P^2Treble function

Default = 0

Select Address	Value	Operational explanation
&h75 [7]	0	Not using of P^2Treble function
	1	Using of P^2Treble function

Setting of P^2Treble smooth transition time

Default = 0

Select Address	Value	Operational explanation
&h75 [3:2]	0	21.4ms
	1	10.7ms
	2	5.4ms
	3	2.7ms

P^2Treble smooth transition control

Default = 0

Select Address	Value	Operational explanation
&h78 [1:0]	0	P^2Treble smooth transition stop
	1	Setting of the values into Coefficient RAM for P^2Treble smooth transition
	2	P^2Treble smooth transition Start

What is necessary is the time of waiting, which is more than the time selected by the setting of P^2Treble smooth transition time, from the time the P^2Treble smooth transition start (&h78[1:0] = “2”) is executed until the following command is sent. Please make sure to perform the P^2Treble smooth transition stop (&h78[1:0] = “0”) after the smooth transition is completed.

Setting of P^2Treble medium・high-band gain

Default = 0h

Select Address	Operational explanation
&h76 [7:4]	

Command	Gain	Command	Gain
0	0dB	8	+8dB
1	+1dB	9	+9dB
2	+2dB	A	+10dB
3	+3dB	B	+11dB
4	+4dB	C	+12dB
5	+5dB	D	+13dB
6	+6dB	E	+14dB
7	+7dB	F	+15dB

© 2012 ROHM Co., Ltd. All rights reserved.

4-13. Scaler 2

Scaler adjusts the gain in order to prevent the overflow in DSP.

Adjustable range is +24dB to -103dB and can be set by the step of 0.5dB.

Scaler 2 does not incorporate the smooth transition function.

Default = 30h

Select Address	Operational explanation
&h25 [7:0]	

Command	Gain
00	+24dB
01	+23.5dB
⋮	⋮
30	0dB
31	−0.5dB
32	−1dB
⋮	⋮
FE	−103dB
FF	−∞

4-14. 7 band・parametric equalizer

7-band parametric equalizer can use Peaking filter, Low-shelf filter or high-shelf filter.

The setting is converted, in the IC, into digital filter's coefficients (b0, b1, b2, a1, a2) by selecting the F, Q and Gain, and transmitted to coefficient RAM. There is no smooth transition function.

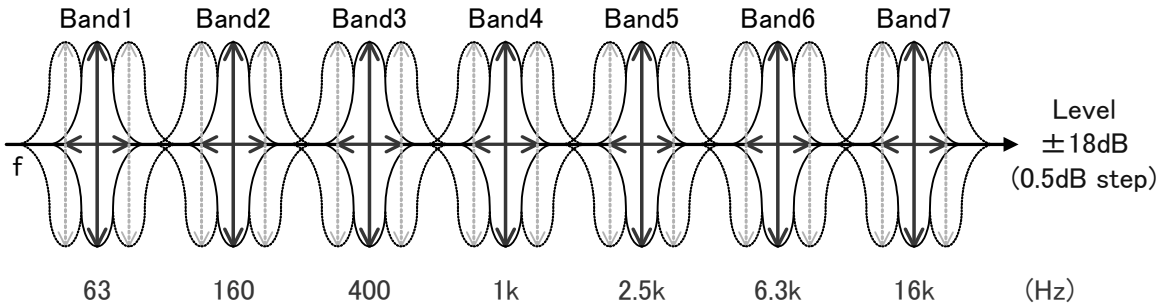

Selection of filter types

Default = 0

Select Address	Value	Operational explanation
bit[7:6]	0	Peaking filter
It sets to all band	1	Low-shelf filter
	2	High-shelf filter

Setting of the Start of transmitting to coefficient RAM

It is transmitted to direct coefficient RAM.

Default = 0

Select Address	Value	Operational explanation
bit [0]	0	Coefficient transmission stop
It sets to all band	1	Coefficient transmission start

© 2012 ROHM Co., Ltd. All rights reserved.

Selection of frequency (F_0)

Default = 0Eh

Select Address	Operational explanation
bit [5:0] It sets to all band	

Command	Frequency	Command	Frequency	Command	Frequency	Command	Frequency	Command	Frequency	Command	Frequency	Command	Frequency	Command	Frequency
00	20Hz	08	50Hz	10	125Hz	18	315Hz	20	800Hz	28	2kHz	30	5kHz	38	12.5kHz
01	22Hz	09	56Hz	11	140Hz	19	350Hz	21	900Hz	29	2.2kHz	31	5.6kHz	39	14kHz
02	25Hz	0A	63Hz	12	160Hz	1A	400Hz	22	1kHz	2A	2.5kHz	32	6.3kHz	3A	16kHz
03	28Hz	0B	70Hz	13	180Hz	1B	450Hz	23	1.1kHz	2B	2.8kHz	33	7kHz	3B	18kHz
04	32Hz	0C	80Hz	14	200Hz	1C	500Hz	24	1.25kHz	2C	3.15kHz	34	8kHz	3C	20kHz
05	35Hz	0D	90Hz	15	220Hz	1D	560Hz	25	1.4kHz	2D	3.5kHz	35	9kHz	3D	–
06	40Hz	0E	100Hz	16	250Hz	1E	630Hz	26	1.6kHz	2E	4kHz	36	10kHz	3E	–
07	45Hz	0F	110Hz	17	280Hz	1F	700Hz	27	1.8kHz	2F	4.5kHz	37	11kHz	3F	–

Selection of quality factor (Q)

Default = 4h

Select Address	Operational explanation
bit [3:0] It sets to every band	

Command	Quality factor	Command	Quality factor
0	0.33	8	2.2
1	0.43	9	2.7
2	0.56	A	3.3
3	0.75	B	3.9
4	1.0	C	4.7
5	1.2	D	5.6
6	1.5	E	6.8
7	1.8	F	8.2

Selection of Gain

Default = 40h

Select Address	Operational explanation
bit [6:0] It sets to every band	

Command	Gain
1C	−18dB
⋮	⋮
3E	−1dB
3F	−0.5dB
40	0dB
41	+0.5dB
42	+1dB
⋮	⋮
64	+18dB

If the coefficient of b0, b1, b2, a1, and a2 exceeds ±4, it may not operate normally.

The Select Address of each band is shown in the table below:

	Band1	Band2	Band3	Band4	Band5	Band6	Band7
Selection of filter type bit [7:6] Setting of the Start of transmitting to coefficient RAM bit [0]	&h50h	&h54h	&h58h	&h5Ch	&h60h	&h64h	&h68h
F(frequency) selection bit [5:0]	&h51h	&h55h	&h59h	&h5Dh	&h61h	&h65h	&h69h
Q(Quality Factor) selection bit [3:0]	&h52h	&h56h	&h5Ah	&h5Eh	&h62h	&h66h	&h6Ah
Gain selection bit [6:0]	&h53h	&h57h	&h5Bh	&h5Fh	&h63h	&h67h	&h6Bh

© 2012 ROHM Co., Ltd. All rights reserved.

4-15. Main output EVR (Electronic volume)

Volume is from+24dB to -103dB, and can be selected by the step of 0.5dB.
At the time of switching of Volume, smooth transition is performed.
The expression in the transition time from x[dB] to y[dB] is |(10^(x/20)-10^(y/20)|*21.4ms (Main output balance Lch=Rch=0dB). The transition time is 21.4ms when it is from 0dB to -∞. Recommend that this setting value is 0dB and under.

Setting of Volume

Default = FFh

Select Address	Operational explanation
&h26 [7:0]	

Command	Gain
00	+24dB
01	+23.5dB
⋮	⋮
30	0dB
31	−0.5dB
32	−1dB
⋮	⋮
FE	−103dB
FF	−∞

4-16. Main output balance

Balance can be attenuated, by the step width of 1dB, from the Volume setting value. At the time of switching, smooth transition is performed. At the time of switching of Balance, smooth transition is performed.
The expression in the transition time from x[dB] to y[dB] is |(10^((Volume+x)/20)-10^((Volume+y)/20)|*21.4ms.

Setting of L/R Balance

Default = 80h

Select Address	Operational explanation
&h27 [7:0]	

Command	Lch	Rch
00	0dB	−∞
01	0dB	−126dB
⋮	⋮	⋮
7E	0dB	−1dB
7F	0dB	0dB
80	0dB	0dB
81	−1dB	0dB
⋮	⋮	⋮
FE	−126dB	0dB
FF	−∞	0dB

4-17. Main output postscaler

It performs the level adjustment when the data calculated in the 32-bit-width DSP is outputted in the form of 24bitwidth.

Adjustable range is from +24dB to -103dB and can be set by the step of 0.5dB.

There is no smooth transition function in Postscaler.

Default = 30h

Select Address	Operational explanation
&h28 [7:0]	

Command	Gain
00	+24dB
01	+23.5dB
⋮	⋮
30	0dB
31	−0.5dB
32	−1dB
⋮	⋮
FE	−103dB
FF	−∞

© 2012 ROHM Co., Ltd. All rights reserved.

4-18. Main output clipper

When measuring the rated output (practical maximum output), it is measured where the total distortion rate (THD+N) is 10%. Clipping with any output amplitude is possible by using of clipper function, for example, the rated output of 10W or 5W can be obtained by using an amplifier with 15W output.

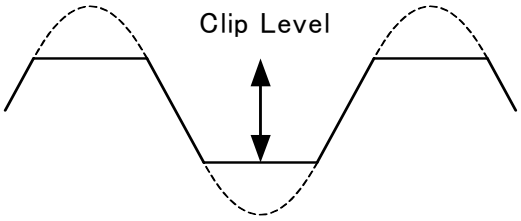

Please set the &h27[7] at “H” when using of clipper function.

Default = 0

Select Address	Value	Operational explanation
&h29 [7]	0	Not using clipper function
	1	Using clipper function

Clip level is set in the form of higher-order 8 bit&h2A[7:0] and lower-order 8 bit&h2B[7:0].

23	22	21	20	19	18	17	16	15	14	13	12	11	10	9	8	7	6	5	4	3	2	1	0	
0	1	1	1	1	1	1	1	1	1	1	1	1	1	1	1	1	1	1	1	1	1	1	1	← Maximum value
1	0	0	0	0	0	0	0	0	0	0	0	0	0	0	0	0	0	0	0	0	0	0	0	← Minimum value
0	clip_level[15:0]																0	0	0	0	0	0	0	← A positive clip level
1	~clip_level[15:0]																1	1	1	1	1	1	1	← A negative clip level

The clip level becomes narrow if the setting value is reduced.

Negative clip level is set in such a way that it is the inversion data of positive clip level.

4-19. Selection of sub input data

Selection of Sub input (Sub woofer processing etc.).

The Sub woofer output interlocked with P^2Bass’s gain setting is possible by inputting the data that after P^2Bass processing.

In addition, in BU9409FV, the data can be inputted from SP conversion2.

Default = 0

Select Address	Value	Operational explanation
&h2F [1:0]	0	Inputting of data that are after Scaler 1
	1	Inputting of data that are after P^2Bass processing
	2	Inputting of data from SP conversion2

© 2012 ROHM Co., Ltd. All rights reserved.

4-20. Sub output channel mixer

Mixing setting of sound of the left channel and the right channel of the digital signal for sub output which is input into sound DSP is done. The monaural conversion of the stereo signal is done here.

The data which is input into Lch of Sub output signal processing is mixed.

Default = 0

Select Address	Value	Operating explanation
&h22 [3:2]	0	Inputting the Lch data
	1	Inputting the data of (Lch + Rch) / 2
	2	Inputting the data of (Lch + Rch) / 2
	3	Inputting the Rch data

The data which is input into Rch of Sub output signal processing is mixed.

Default = 0

Select Address	Value	Operating explanation
&h22 [1:0]	0	Inputting the Rch data
	1	Inputting the data of （Lch + Rch） / 2
	2	Inputting the data of （Lch + Rch） / 2
	3	Inputting the Lch data

4-21. LPF for sub woofer output

It is the crossover filter (LPF) for sub woofer output.
LPF function ON/OFF.

Default = 0

Select Address	Value	Operating explanation
&h7A [7]	0	LPF function is not used
	1	LPF function is used

Setting of the cut off frequency (Fc) of LPF

Default = 0h

Select Address	Operating explanation
&h7A [6:4]	

Command	Fc	Command	Fc
0	60Hz	4	160Hz
1	80Hz	5	200Hz
2	100Hz	6	240Hz
3	120Hz	7	280Hz

© 2012 ROHM Co., Ltd. All rights reserved.

4-22. Sub output 3 band Parametric Equalizer

The peaking filter or the low shelf filter or the high shelf filter can be used by the parametric equalizer of 3 bands. By the fact that F, Q and Gain are selected, it converts the setting to the coefficient (b0, b1, b2, a1 and a2) of the digital filter inside IC, and transfers it to the coefficient RAM. There is no smooth transition function.

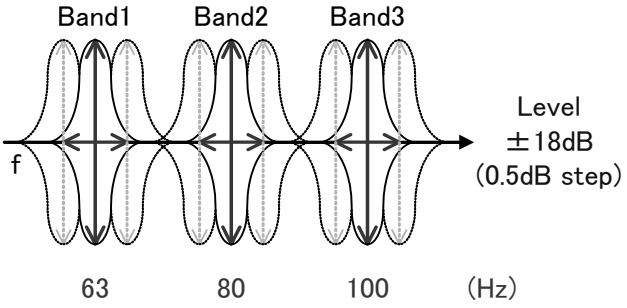

Selection of filter type

Default = 0

Select Address	Value	Operating explanation
bit[7:6] It sets to all band	0	Peaking filter
	1	Low shelf filter
	2	High shelf filter

Transfer start setting to coefficient RAM.

It transfers directly to coefficient RAM.

Default = 0

Select Address	Value	Operating explanation
bit [0] It sets to all band	0	Coefficient transmission stop
	1	Coefficient transmission start

Selection of frequency (F_0)

Default = 0Eh

Select Address	Operating explanation
bit [5:0] It sets to all band	

Command	Frequency	Command	Frequency	Command	Frequency	Command	Frequency	Command	Frequency	Command	Frequency	Command	Frequency	Command	Frequency
00	20Hz	08	50Hz	10	125Hz	18	315Hz	20	800Hz	28	2kHz	30	5kHz	38	12.5kHz
01	22Hz	09	56Hz	11	140Hz	19	350Hz	21	900Hz	29	2.2kHz	31	5.6kHz	39	14kHz
02	25Hz	0A	63Hz	12	160Hz	1A	400Hz	22	1kHz	2A	2.5kHz	32	6.3kHz	3A	16kHz
03	28Hz	0B	70Hz	13	180Hz	1B	450Hz	23	1.1kHz	2B	2.8kHz	33	7kHz	3B	18kHz
04	32Hz	0C	80Hz	14	200Hz	1C	500Hz	24	1.25kHz	2C	3.15kHz	34	8kHz	3C	20kHz
05	35Hz	0D	90Hz	15	220Hz	1D	560Hz	25	1.4kHz	2D	3.5kHz	35	9kHz	3D	–
06	40Hz	0E	100Hz	16	250Hz	1E	630Hz	26	1.6kHz	2E	4kHz	36	10kHz	3E	–
07	45Hz	0F	110Hz	17	280Hz	1F	700Hz	27	1.8kHz	2F	4.5kHz	37	11kHz	3F	–

Selection of quality factor (Q)

Default = 4h

Select Address	Operating explanation
bit [3:0] It sets to all band	

Command	Quality factor	Command	Quality factor
0	0.33	8	2.2
1	0.43	9	2.7
2	0.56	A	3.3
3	0.75	B	3.9
4	1.0	C	4.7
5	1.2	D	5.6
6	1.5	E	6.8
7	1.8	F	8.2

© 2012 ROHM Co., Ltd. All rights reserved.

Selection of Gain

Default = 40h

Select Address	Operating explanation
bit [6:0] It sets to all band	

Command	Gain
1C	−18dB
⋮	⋮
3E	−1dB
3F	−0.5dB
40	0dB
41	+0.5dB
42	+1dB
⋮	⋮
64	+18dB

If the coefficient of b0, b1, b2, a1, and a2 exceeds ±4, it may not operate normally.

Select Address of every band is as in chart below

	Band1	Band2	Band3
Selection of filter type bit [7:6]	&h80h	&h84h	&h88h
Transfer start setting to coefficient RAM bit [0]			
F (frequency) selection bit [5:0]	&h81h	&h85h	&h89h
Q (quality factor) selection bit [3:0]	&h82h	&h86h	&h8Ah
Gain selection bit [6:0]	&h83h	&h87h	&h8Bh

4-23. Sub output EVR (electronic volume)

The volume for sub output can select with 0.5dB step from +24dB to -103dB.
When changing volume, smooth transition is done.
The expression in the transition time from x[dB] to y[dB] is |(10^(x/20)-10^(y/20)|*21.4ms (Sub output balance Lch=Rch=0dB).
The transition time is 21.4ms when it is from 0dB to -∞. Recommend that this setting value is 0dB and under.

Volume setting

Default = FFh

Select Address	Operating explanation
&h2C [7:0]	

Command	Gain
00	+24dB
01	+23.5dB
⋮	⋮
30	0dB
31	−0.5dB
32	−1dB
⋮	⋮
FE	−103dB
FF	−∞

© 2012 ROHM Co., Ltd. All rights reserved.

4-24. Sub output balance

As for sub output balance, it is possible to be attenuated at 1dB step width from volume setting value. When changing smooth transition is done.
When changing balance, smooth transition is done.
The expression in the transition time from x[dB] to y[dB] is |(10^((Volume+x)/20)-10^((Volume+y)/20)|*21.4ms.

L/R Balance setting

Default = 80h

Select Address	Operating explanation
&h2D [7:0]	

Command	Lch	Rch
00	0dB	−∞
01	0dB	−126dB
⋮	⋮	⋮
7E	0dB	−1dB
7F	0dB	0dB
80	0dB	0dB
81	−1dB	0dB
⋮	⋮	⋮
FE	−126dB	0dB
FF	−∞	0dB

4-25. Sub output post scaler

The occasion when the data which is calculated with DSP of 32bit width is output at 24bit width, level adjustment is done.

The adjustment range can be set with 0.5dB step from +24dB to -103dB.

There is no smooth transition function in the sub output post scaler.

Default = 30h

Select Address	Operating explanation
&h2E [7:0]	

Command	Gain
00	+24dB
01	+23.5dB
⋮	⋮
30	0dB
31	−0.5dB
32	−1dB
⋮	⋮
FE	−103dB
FF	−∞

© 2012 ROHM Co., Ltd. All rights reserved.

4-26. Sub output clipper

The case when rated output (practical maximum output) of the television is measured, total harmonic distortion + noise (THD+N) measures at the place of 10%. It can obtain the rated output of 10W and 5W for example making use of the amplifier of 15W output, because it is possible to clip with optional output amplitude by using the clipper function.

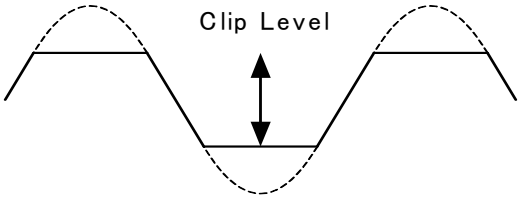

Please designate &h30 [7] as" H when using sub output clipper function.

Default = 0

Select Address	Value	Operating explanation
&h30 [7]	0	Clipper function is not used
	1	Clipper function is used

As for clip level, it sets with superior 8 bits &h31 [7: 0] and subordinate 8 bits &h32 [7: 0].

23	22	21	20	19	18	17	16	15	14	13	12	11	10	9	8	7	6	5	4	3	2	1	0	
0	1	1	1	1	1	1	1	1	1	1	1	1	1	1	1	1	1	1	1	1	1	1	1	← Maximum value
1	0	0	0	0	0	0	0	0	0	0	0	0	0	0	0	0	0	0	0	0	0	0	0	← Minimum value
0	clip_level[15:0]																0	0	0	0	0	0	0	← A positive clip level
1	~clip_level[15:0]																1	1	1	1	1	1	1	← A negative clip level

When settin g value is made small, clip level becomes narrow.

As for negative clip level, the reversal data of positive clip level is set.

© 2012 ROHM Co., Ltd. All rights reserved.

4-27. Direct setting five coefficient of b0, b1, b2, a1 and a2 of Bi-quad Filter

7 bands Parametric Equalizer of main output and of 3 bands Parametric Equalizer of sub output have used the secondary IIR type digital filter (Bi-quad Filter).

It is possible to set five coefficient 24 bit of b0, b1, b2, a1 and a2 of Bi-quad Filter (-4～+4) directly from an external.

When this function is used, it can do the filter type and frequency setting, Q value (quality factor) setting and gain setting other than Peaking, Low-Shelf and High-Shelf unrestrictedly.

(Note) five coefficient have the necessity to make below the ±4, there is no read-out function of setting value and an automatic renewal function of coefficient RAM.

Register for the coefficient transfer of 24bit

Before transferring into coefficient RAM in a lumping, the data is housed in the register for coefficient transfer from the micro-computer.

Default = 00h

Select Address	Operating explanation
&h8D [7:0]	bit[23:16] which transfers 24 bit coefficient
&h8E [7:0]	bit[15:8] which transfers 24 bit coefficient
&h8F [7:0]	bit[7:0] which transfers 24 bit coefficient

It starts to transmit the coefficient of 24bit into coefficient RAM

Default = 0

Select Address	Value	Operating explanation
&h8C [7]	0	Coefficient transmission stop
	1	Coefficient transmission start

Coefficient number appointment of coefficient RAM

Default = 00h

Select Address	Operating explanation
&h8C [6:0]	Coefficient number appointment of coefficient RAM

Appointment of coefficient number other than 14H↔45H is prohibition

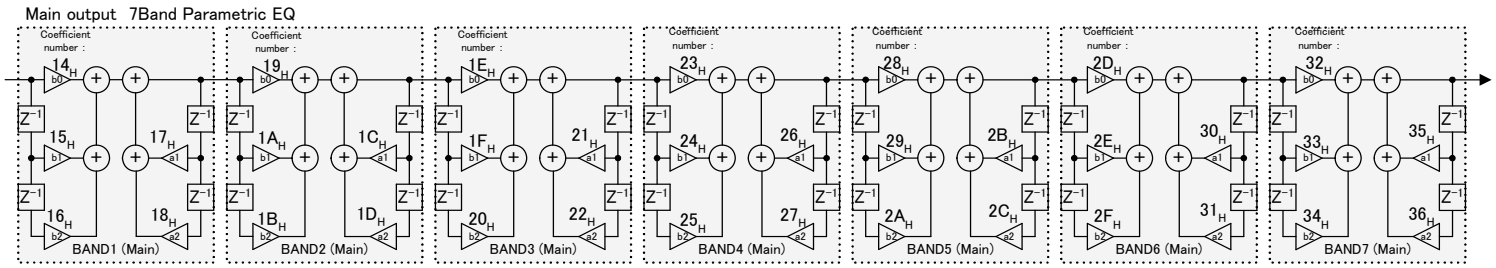

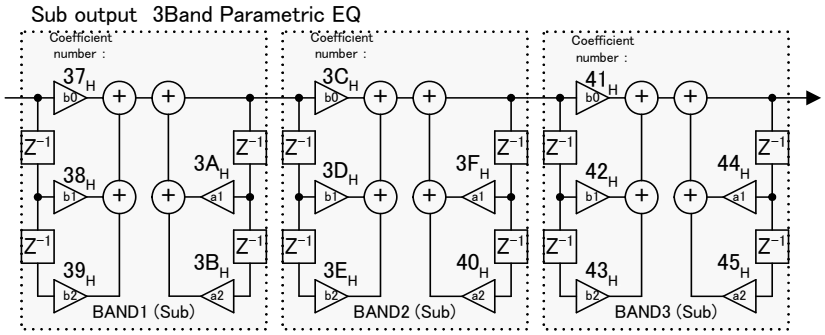

© 2012 ROHM Co., Ltd. All rights reserved.

4-28. About the automatic renewal of five coefficients of b0, b1, b2, a1 and a2 of Bi-quad Filter

BASS, MIDDLE, TREBLE, main output 7 bands Parametric Equalizer and sub output 3 band Parametric Equalizer have used coefficient RAM. As for this coefficient RAM, because direct access is not possible from the micro-computer, it cannot refresh the register efficiently.

There is an automatic renewal function of coefficient RAM in this DSP, the automatic write-in renewal of coefficient RAM is possible by using this function. However when 4-26 「the function of direct setting a coefficient RAM」 is utilized, it is not possible to utilize automatic write-in renewal.

Selection of using the automatic write-in renewal function

Default = 0

Select Address	Value	Operating explanation
&h6D [0]	0	Automatic write-in renewal function is used
	1	Automatic write-in renewal function is not used

The separate setting of Filter of automatic write-in renewal function

Default = 00h

Select Address	Filter	Operating explanation
&h6E [0]	BASS	0：Automatic renewal function OFF 1：Automatic renewal function ON
&h6E [1]	MIDDLE	0：Automatic renewal function OFF 1：Automatic renewal function ON
&h6E [2]	TREBLE	0：Automatic renewal function OFF 1：Automatic renewal function ON
&h6E [4]	Sub BAND1	0：Automatic renewal function OFF 1：Automatic renewal function ON
&h6E [5]	Sub BAND2	0：Automatic renewal function OFF 1：Automatic renewal function ON
&h6E [6]	Sub BAND3	0：Automatic renewal function OFF 1：Automatic renewal function ON
&h6F [0]	Main MAND1	0：Automatic renewal function OFF 1：Automatic renewal function ON
&h6F [1]	Main MAND2	0：Automatic renewal function OFF 1：Automatic renewal function ON
&h6F [2]	Main MAND3	0：Automatic renewal function OFF 1：Automatic renewal function ON
&h6F [3]	Main MAND4	0：Automatic renewal function OFF 1：Automatic renewal function ON
&h6F [4]	Main MAND5	0：Automatic renewal function OFF 1：Automatic renewal function ON
&h6F [5]	Main MAND6	0：Automatic renewal function OFF 1：Automatic renewal function ON
&h6F [6]	Main MAND7	0：Automatic renewal function OFF 1：Automatic renewal function ON

© 2012 ROHM Co., Ltd. All rights reserved.

5. P-S Conversion 1 and P-S Conversion 2

BU9408KS2 has two built-in parallel-serial conversion circuits (P-S Conversion 1 and P-S Conversion 2). P-S conversion 1 converts the output from the ASRC or DSP (Main/Sub) output to 3-line serial data before sending it from DATAMO, BCKO and LRCKO (pins 27, 28 and 29). (Refer to &h04 [1:0])
P-S conversion 2 converts the ASRC or DSP (Main/Sub) output or DF1 output into 3-line serial data before transmitting it from DATASO, BCKO and LRCKO (pins 26, 28 and 29). Moreover, it is also possible to output the synchronous clock for serial transfer from ERR1_LRC and an ERR2_BCK terminal by an output option (Refer to &h04 [5:4]).

The three output formats are IIS, left-justified and right-justified. 16bit, 20bit and 24bit output can be selected for each format.
The timing charts for each transfer format are as follows:

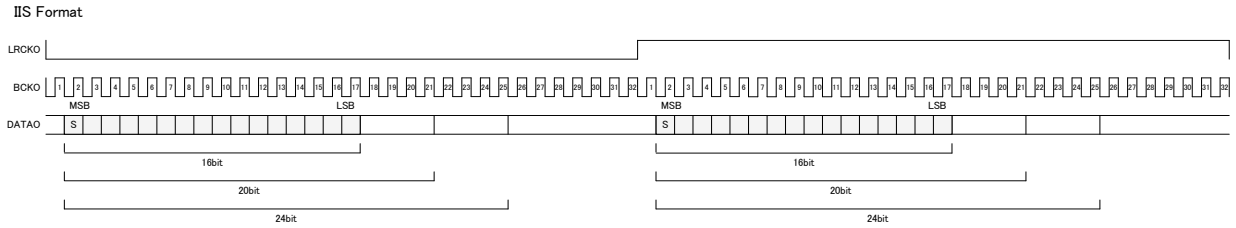

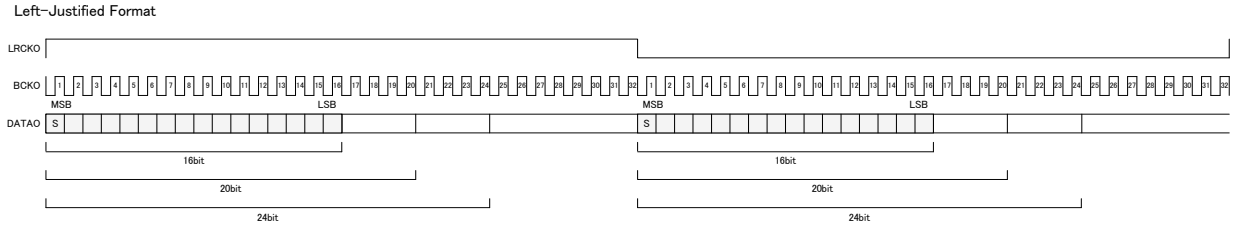

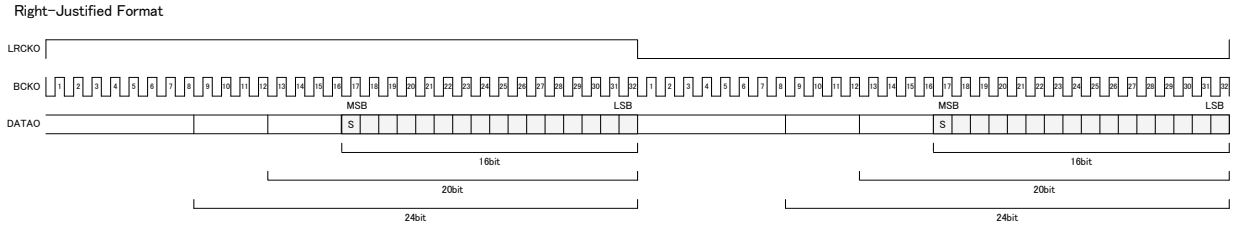

5-1. 3-line Serial Output Format Configuration

Default = 0

Select Address	Value	Operation Description
P-S Conversion 1 &h0D [3:2] P-S Conversion 2 &h0E [3:2]	0	IIS format
	1	Left-justified format
	2	Right-justified format

5-2. 3-line Serial Output Data Bit Width Configuration

Default = 0

Select Address	Value	Operation Description
P-S Conversion 1 &h0D [1:0] P-S Conversion 2 &h0E [1:0]	0	16 bit
	1	20 bit
	2	24 bit

© 2012 ROHM Co., Ltd. All rights reserved.

6. 8x Over-Sampling Digital Filter (DF)

In each BU9408KS2 audio analog signal output DAC, an 8x over-sampling digital filter is inserted into the previous step of the DAC input.

In addition to filter calculations, this block also performs pre-scaler, volume and Lch/Rch mix functions.

BU9408KS2's DF+DAC configurations are as follows:

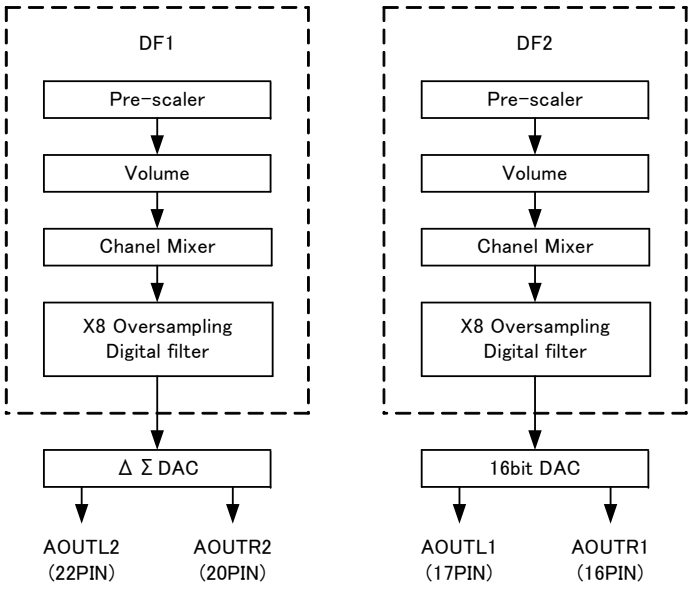

6-1. Pre-Scaler Function (Attenuation)

The signal levels are adjusted in order to bring out the audio DAC performance.

For DF1, refer to &h90[7:0] and &h91[7:0]. The default value is h4000.

For DF1, refer to &h93[7:0] and &h94[7:0]. The default value is h4000.

6-2. Volume Function

The volume value can be configured in 0.5dB increments from +6dB to -121dB.
To change the volume value, coefficient soft transition takes place.
The expression in the transition time from x[dB] to y[dB] is |(10^(x/20)-10^(y/20)|*21.4ms. The transition time is 21.4ms when it is from 0dB to -∞. Recommend that this setting value is 0dB and under.

Default = FFh

Select Address	Operation Description
DF1 &h92 [7:0] DF2 &h95 [7:0]	

Command Value	Gain
00	+6dB
01	+5.5dB
⋮	⋮
0C	0dB
0D	−0.5dB
0E	−1dB
⋮	⋮
FE	−121dB
FF	−∞

Calculation format: (12-command value) x 0.5dB

© 2012 ROHM Co., Ltd. All rights reserved.

6-3. Channel Mixer

Performs mixing configuration of left and right channel sounds of digital signals input to the DAC.
Stereo signals are converted to monaural here.

Mixes DAC Lch input data.

Default = 0

Select Address	Value	Operation Description
DF1 &h23 [3:2] DF2 &h23 [7:6]	0	Inputs Lch data
	1	Inputs (Lch+Rch)/2 data
	2	Inputs (Lch+Rch)/2 data
	3	Inputs Rch data

Mixes DAC Rch input data.

Default = 0

Select Address	Value	Operation Description
DF1 &h23 [1:0] DF2 &h23 [5:4]	0	Inputs Rch data
	1	Inputs (Lch+Rch)/2 data
	2	Inputs (Lch+Rch)/2 data
	3	Inputs Lch data

© 2012 ROHM Co., Ltd. All rights reserved.

7. Mute Function by MUTE1B, MUTE2B and MUTE3B Terminal

BU9408KS2 has a mute function by an external terminal.
It's possible to mute DSP's main and sub digital output by MUTE1B (12pin) terminal to “L”.
It's possible to mute DF1+ΔΣDAC output by MUTE2B (13pin) terminal to “L”.
It's possible to mute DF2＋16bit DAC output by MUTE3B (14pin) terminal to “L”.

Soft mute transition time setup of a MUTE1B terminal (12PIN)

Mute the Main and Sub output of DSP.
Select the transition time of entering from 0dB to mute state.

Default = 0

Select Address	Value	Operating Description
&h10 [1:0]	0	21.4ms (Release mute time is 21.4ms.)
	1	10.7ms (Release mute time is 10.7ms.)
	2	5.4ms (Release mute time is 10.7ms.)
	3	2.7ms (Release mute time is 10.7ms.)

Soft mute transition time setup of a MUTE2B terminal (13PIN)

Mute the AOUTL2(22PIN) and AOUTR2(20PIN) output of DF1+ΔΣDAC.
Select the transition time of entering from 0dB to mute state.

Default = 0

Select Address	Value	Operating Description
&h10 [3:2]	0	21.4ms (Release mute time is 21.4ms.)
	1	10.7ms (Release mute time is 10.7ms.)
	2	5.4ms (Release mute time is 10.7ms.)
	3	2.7ms (Release mute time is 10.7ms.)

Soft mute transition time setup of a MUTE3B terminal (14PIN)

Mute the AOUTL1(17PIN) and AOUTR1(16PIN) output of DF2+16bit DAC.
Select the transition time of entering from 0dB to mute state.

Default = 0

Select Address	Value	Operating Description
&h10 [5:4]	0	21.4ms (Release mute time is 21.4ms.)
	1	10.7ms (Release mute time is 10.7ms.)
	2	5.4ms (Release mute time is 10.7ms.)
	3	2.7ms (Release mute time is 10.7ms.)

© 2012 ROHM Co., Ltd. All rights reserved.

8. Commands Transmitted after Reset Release

The following commands must be transmitted after reset release, including after power supply stand-up.

0. Turn power on.

↓

○Wait approximately 1ms until oscillation is stable. (The time to stabilization should be adjusted according to the pendulum product.)

↓

1. Reset release (RESETB = “H”), Mute release (MUTE1B,MUTE2B,MUTE3B = “H”)

↓

○Wait approximately 500us until RAM initialization is complete.

↓

2. &hF1[2] = 0 : Signals from the analog block are connected to the digital block.

↓

3. &hF3[1] = 0 : CLK100M for a down sample block of ASRC is set as a normal mode. (&hF3 = 00h）

↓

4. &hB0[5:4] = 0 : Configure PLL clock to regular use state. (&hB0 = 02）

↓

5. &hB1[7:0] = AAh : The phase of the clock outputted from PLL is adjusted.

↓

6. &h03[5:4][1:0] = 0 : Select input at SP1 and SP2.

↓

7. &h18[7] = 0 : Set 1 when use SPDIF. (Needless set when not use SPDIF.)

↓

8. &hA0 = A6h : Configure PLLA1.
   &hA1 = A0h
   &hA2 = A4h
   &hA3 = A4h
   &hA4 = 00h
   &hA7 = 40h

↓

9. &hA8 = A6h : Configure PLLA2.
   &hA9 = A0h
   &hAA = A4h
   &hAB = A4h
   &hAC = 00h
   &hAF = 40h

↓

○Wait approximately 20ms until PLL is stable.

↓

10. &h01[7:6] = 0 : The data clear of built-in RAM is completed and it changes into the condition that RAM can be used.

↓

11. &h08[4][0] = 0 : Configure system clock..

↓

12. &h14 = C0h : The data clear of ASRC is completed and it changes into normal condition.
    &h14 = 40h
    &h14 = 01h

↓

13. Configuration of other registers.
    &h26[7:0] = **h : Mute release of Main data output volume （30h = 0dB）
    &h2C[7:0] = **h : Mute release of Sub data output volume (30h = 0dB)
    &h92[7:0] = **h : Mute release of DF1+ΔΣDAC output volume （0Ch = 0dB）
    &h95[7:0] = **h : Mute release of DF2+16bitDACoutput volume （0Ch = 0dB）

© 2012 ROHM Co., Ltd. All rights reserved.

9. Audio Interface Signal Specification

○Electric specification and timing of MCK, BCK, LRCK, and SDATA1 and SDATA2

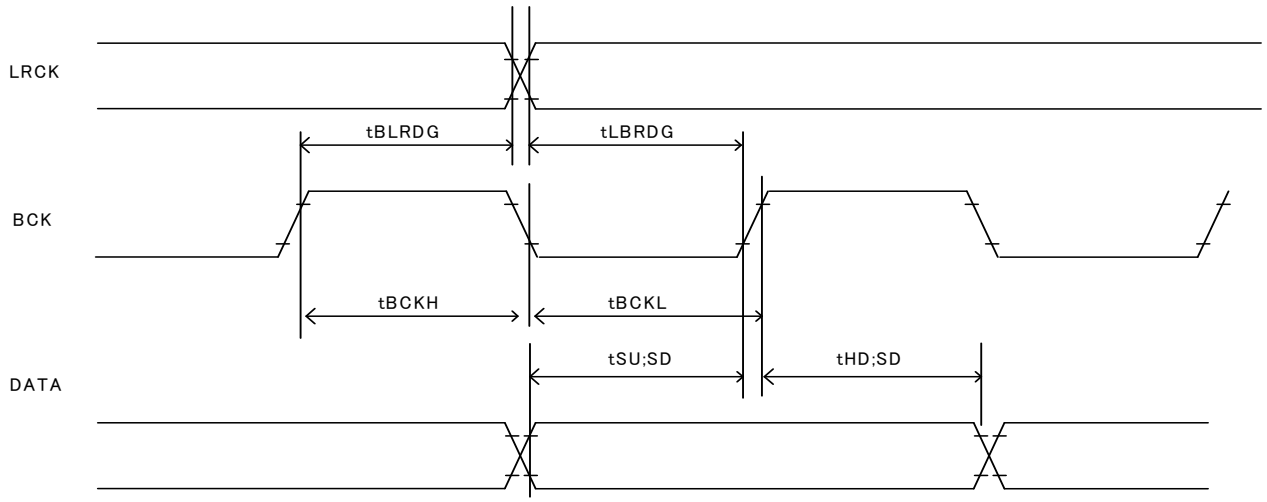

Fig 9-1 Audio interface timing

Parameter			Sign	Min.	Max.	Unit
1	MCK	Frequency	fSCLK	4.096	24.576	MHz
2		DUTY	dSCLK	40	60	%
3	LRCK	Frequency	fLRCK	32	48	kHz
4		DUTY	dLRCK	40	60	%
5	BCK	Cycle	tBCK	325	—	ns
6		H width	tBCKH	130	—	ns
7		L width	tBCKL	130	—	ns
8	It is time to the edge of LRCK from a BCK rising edge.*1		tBLRDG	20	—	ns
9	It is time to a BCK rising edge from the edge of LRCK.*1		tLBRDG	20	-	ns
10	Setup time of SDATA		tSU;SD	20	-	ns
11	Hold time of SDATA		tHD;SD	20	—	ns

*1 This standard value has specified that the edge of LRCK and the rising edge of BCK do not overlap.

© 2012 ROHM Co., Ltd. All rights reserved.

10. Notes at the Time of Reset

Since the state of IC is not decided, please make it into RESETB=L at the time of a power supply injection, and surely apply reset.

Reset of BU9408KS2 is performing noise removal by MCLK.

Therefore, in order to apply reset, a MCLK clock pulse is required of the state of RESETB=L more than 10 times.

The power-on reset after a power supply injection, and when you usually apply reset at the time of operation, please be sure to carry out in the state where the clock is inputted, from MCLK.

© 2012 ROHM Co., Ltd. All rights reserved.

●Cautions

(1) ABSOLUTE MAXIMUM RATINGS

Permanent device damage may occur and break mode (open or short) can not be specified if power supply, operating temperature, and those of ABSOLUTE MAXIMUM RATINGS are exceeded. If such a special condition is expected, components for safety such as fuse must be used.

(2)Regarding of SCLI and SDAI terminals

SCLI and the SDAI terminal do not support 5 V-tolerant. Please use it within absolute maximum rating (4.5V).

(3) Power Supply

Power and Ground line must be designed as low impedance in the PCB. Print patterns if digital power supply and analog power supply must be separated even if these have same voltage level. Print patterns for ground must be designed as same as power supply. These considerations avoid analog circuits from the digital circuit noise. All pair of power supply and ground must have their own de-coupling capacitor. Those capacitor should be checked about their specification, etc. (nominal electrolytic capacitor degrades its capacity at low temperature) and choose the constant of an electrolytic capacitor.

(4) Functionality in the strong electro-magnetic field

Malfunction may occur if in the strong electro-magnetic field.

(5) Input terminals

All LSI contain parasitic components. Some are junctions which normally reverse bias. When these junctions forward bias, currents flows on unwanted path, malfunction or device damage may occur. To prevent this, all input terminal voltage must be between ground and power supply, or in the range of guaranteed value in the Electrical characteristics. And no voltage should be supplied to all input terminal when power is not supplied.

© 2012 ROHM Co., Ltd. All rights reserved.

●Ordering Information

B	U	9	4	0	8	K	S	2	E2

- Part Number
- Package
  KS2: SQFP-T52
- Packaging and forming specification
  None: Tray, Tube

●Physical Dimension Tape and Reel Information

SQFP-T52

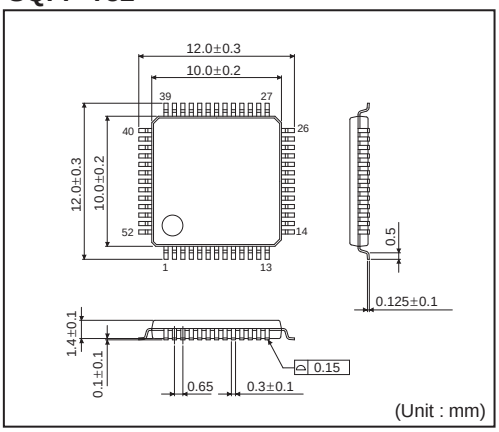

<Tape and Reel information>

Container	Tray (with dry pack)
Quantity	1000pcs
Direction of feed	Direction of product is fixed in a tray

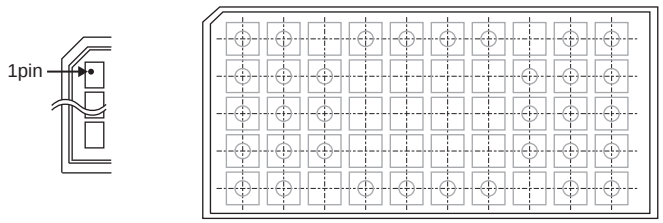

∗Order quantity needs to be multiple of the minimum quantity.

●Marking Diagram(s)(TOP VIEW)

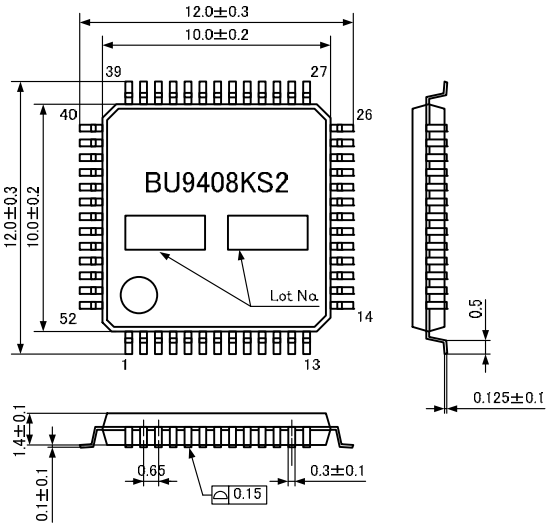

© 2012 ROHM Co., Ltd. All rights reserved.

Notice

Precaution on using ROHM Products

1. Our Products are designed and manufactured for application in ordinary electronic equipments (such as AV equipment, OA equipment, telecommunication equipment, home electronic appliances, amusement equipment, etc.). If you intend to use our Products in devices requiring extremely high reliability (such as medical equipment (Note 1), transport equipment, traffic equipment, aircraft/spacecraft, nuclear power controllers, fuel controllers, car equipment including car accessories, safety devices, etc.) and whose malfunction or failure may cause loss of human life, bodily injury or serious damage to property ("Specific Applications"), please consult with the ROHM sales representative in advance. Unless otherwise agreed in writing by ROHM in advance, ROHM shall not be in any way responsible or liable for any damages, expenses or losses incurred by you or third parties arising from the use of any ROHM's Products for Specific Applications.

(Note1) Medical Equipment Classification of the Specific Applications

JAPAN	USA	EU	CHINA
CLASSⅢ	CLASSⅢ	CLASSⅡb	CLASSⅢ
CLASSⅣ		CLASSⅢ	

2. ROHM designs and manufactures its Products subject to strict quality control system. However, semiconductor products can fail or malfunction at a certain rate. Please be sure to implement, at your own responsibilities, adequate safety measures including but not limited to fail-safe design against the physical injury, damage to any property, which a failure or malfunction of our Products may cause. The following are examples of safety measures:
   [a] Installation of protection circuits or other protective devices to improve system safety
   [b] Installation of redundant circuits to reduce the impact of single or multiple circuit failure

3. Our Products are designed and manufactured for use under standard conditions and not under any special or extraordinary environments or conditions, as exemplified below. Accordingly, ROHM shall not be in any way responsible or liable for any damages, expenses or losses arising from the use of any ROHM's Products under any special or extraordinary environments or conditions. If you intend to use our Products under any special or extraordinary environments or conditions (as exemplified below), your independent verification and confirmation of product performance, reliability, etc, prior to use, must be necessary:
   [a] Use of our Products in any types of liquid, including water, oils, chemicals, and organic solvents
   [b] Use of our Products outdoors or in places where the Products are exposed to direct sunlight or dust
   [c] Use of our Products in places where the Products are exposed to sea wind or corrosive gases, including Cl_2, H_2S, NH_3, SO_2, and NO_2
   [d] Use of our Products in places where the Products are exposed to static electricity or electromagnetic waves
   [e] Use of our Products in proximity to heat-producing components, plastic cords, or other flammable items
   [f] Sealing or coating our Products with resin or other coating materials
   [g] Use of our Products without cleaning residue of flux (even if you use no-clean type fluxes, cleaning residue of flux is recommended); or Washing our Products by using water or water-soluble cleaning agents for cleaning residue after soldering
   [h] Use of the Products in places subject to dew condensation

4. The Products are not subject to radiation-proof design.

5. Please verify and confirm characteristics of the final or mounted products in using the Products.

6. In particular, if a transient load (a large amount of load applied in a short period of time, such as pulse. is applied, confirmation of performance characteristics after on-board mounting is strongly recommended. Avoid applying power exceeding normal rated power; exceeding the power rating under steady-state loading condition may negatively affect product performance and reliability.

7. De-rate Power Dissipation (Pd) depending on Ambient temperature (Ta). When used in sealed area, confirm the actual ambient temperature.

8. Confirm that operation temperature is within the specified range described in the product specification.

9. ROHM shall not be in any way responsible or liable for failure induced under deviant condition from what is defined in this document.

Precaution for Mounting / Circuit board design

1. When a highly active halogenous (chlorine, bromine, etc.) flux is used, the residue of flux may negatively affect product performance and reliability.

2. In principle, the reflow soldering method must be used; if flow soldering method is preferred, please consult with the ROHM representative in advance.

For details, please refer to ROHM Mounting specification

© 2014 ROHM Co., Ltd. All rights reserved.

Precautions Regarding Application Examples and External Circuits

1. If change is made to the constant of an external circuit, please allow a sufficient margin considering variations of the characteristics of the Products and external components, including transient characteristics, as well as static characteristics.

2. You agree that application notes, reference designs, and associated data and information contained in this document are presented only as guidance for Products use. Therefore, in case you use such information, you are solely responsible for it and you must exercise your own independent verification and judgment in the use of such information contained in this document. ROHM shall not be in any way responsible or liable for any damages, expenses or losses incurred by you or third parties arising from the use of such information.

Precaution for Electrostatic

This Product is electrostatic sensitive product, which may be damaged due to electrostatic discharge. Please take proper caution in your manufacturing process and storage so that voltage exceeding the Products maximum rating will not be applied to Products. Please take special care under dry condition (e.g. Grounding of human body / equipment / solder iron, isolation from charged objects, setting of Ionizer, friction prevention and temperature / humidity control).

Precaution for Storage / Transportation

1. Product performance and soldered connections may deteriorate if the Products are stored in the places where:
   [a] the Products are exposed to sea winds or corrosive gases, including Cl2, H2S, NH3, SO2, and NO2
   [b] the temperature or humidity exceeds those recommended by ROHM
   [c] the Products are exposed to direct sunshine or condensation
   [d] the Products are exposed to high Electrostatic

2. Even under ROHM recommended storage condition, solderability of products out of recommended storage time period may be degraded. It is strongly recommended to confirm solderability before using Products of which storage time is exceeding the recommended storage time period.

3. Store / transport cartons in the correct direction, which is indicated on a carton with a symbol. Otherwise bent leads may occur due to excessive stress applied when dropping of a carton.

4. Use Products within the specified time after opening a humidity barrier bag. Baking is required before using Products of which storage time is exceeding the recommended storage time period.

Precaution for Product Label

QR code printed on ROHM Products label is for ROHM's internal use only.

Precaution for Disposition

When disposing Products please dispose them properly using an authorized industry waste company.

Precaution for Foreign Exchange and Foreign Trade act

Since our Products might fall under controlled goods prescribed by the applicable foreign exchange and foreign trade act, please consult with ROHM representative in case of export.

Precaution Regarding Intellectual Property Rights

1. All information and data including but not limited to application example contained in this document is for reference only. ROHM does not warrant that foregoing information or data will not infringe any intellectual property rights or any other rights of any third party regarding such information or data. ROHM shall not be in any way responsible or liable for infringement of any intellectual property rights or other damages arising from use of such information or data.:

2. No license, expressly or implied, is granted hereby under any intellectual property rights or other rights of ROHM or any third parties with respect to the information contained in this document.

Other Precaution

1. This document may not be reprinted or reproduced, in whole or in part, without prior written consent of ROHM.

2. The Products may not be disassembled, converted, modified, reproduced or otherwise changed without prior written consent of ROHM.

3. In no event shall you use in any way whatsoever the Products and the related technical information contained in the Products or this document for any military purposes, including but not limited to, the development of mass-destruction weapons.

4. The proper names of companies or products described in this document are trademarks or registered trademarks of ROHM, its affiliated companies or third parties.

© 2014 ROHM Co., Ltd. All rights reserved.

General Precaution

1. Before you use our Products, you are requested to carefully read this document and fully understand its contents. ROHM shall not be in any way responsible or liable for failure, malfunction or accident arising from the use of any ROHM's Products against warning, caution or note contained in this document.

2. All information contained in this document is current as of the issuing date and subject to change without any prior notice. Before purchasing or using ROHM's Products, please confirm the latest information with a ROHM sales representative.

3. The information contained in this document is provided on an "as is" basis and ROHM does not warrant that all information contained in this document is accurate and/or error-free. ROHM shall not be in any way responsible or liable for any damages, expenses or losses incurred by you or third parties resulting from inaccuracy or errors of or concerning such information.

© 2014 ROHM Co., Ltd. All rights reserved.

Mouser Electronics

Authorized Distributor

Click to View Pricing, Inventory, Delivery & Lifecycle Information:

ROHM Semiconductor:

BU9408KS2