4.5V to 42V Input Voltage Range 1.5A Output Current Integrated FET

1ch Buck Converter

BD9G201EFJ-M

General Description

BD9G201EFJ is a buck converter with built-in high side MOSFET. It has an input voltage range of 4.5V to 42V. Current mode architecture provides fast transient response and a simple phase compensation setup.
The IC is mainly used as a secondary side power supply: for example, a step-down output of 3.3V/5V can be produced from voltage power supply such as 12V or 24V. In addition, it has a synchronization function with an external CLK that provides noise management.

Key Specifications

- Input Voltage range : 4.5V to 42V
- Reference voltage precision (Ta= 25°C) ±1.5%
  (Ta= -40 to +105°C) ±2.0%
- Max Output Current : 1.5A(Max)
- Operating Temperature range : -40°C to +105°C

Package W (Typ) x D (Typ) x H (Max)

HTSOP-J8ES 4.90mm x 6.00mm x 1.00mm

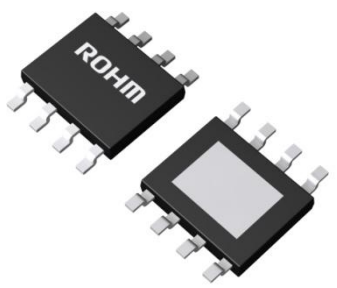

HTSOP-J8ES

Features

- AEC-Q100 Qualified(*Note 1*)
- Integrated Nch MOSFET
- Synchronizes to external clock 250kHz to 500kHz
- ON/OFF Control through EN Terminal
  (Standby current of 0µA)
- Small package(HTSOP-J8ES)
- LowDrop Out operation

(*Note1*: Grade 2)

Applications

- Automotive applications
  (Navigation system, Audio system, etc.)
- Industrial distributed-power applications
- Entertainment equipment
- Consumer devices in general that has 12V/24V lines

Typical Application Circuit

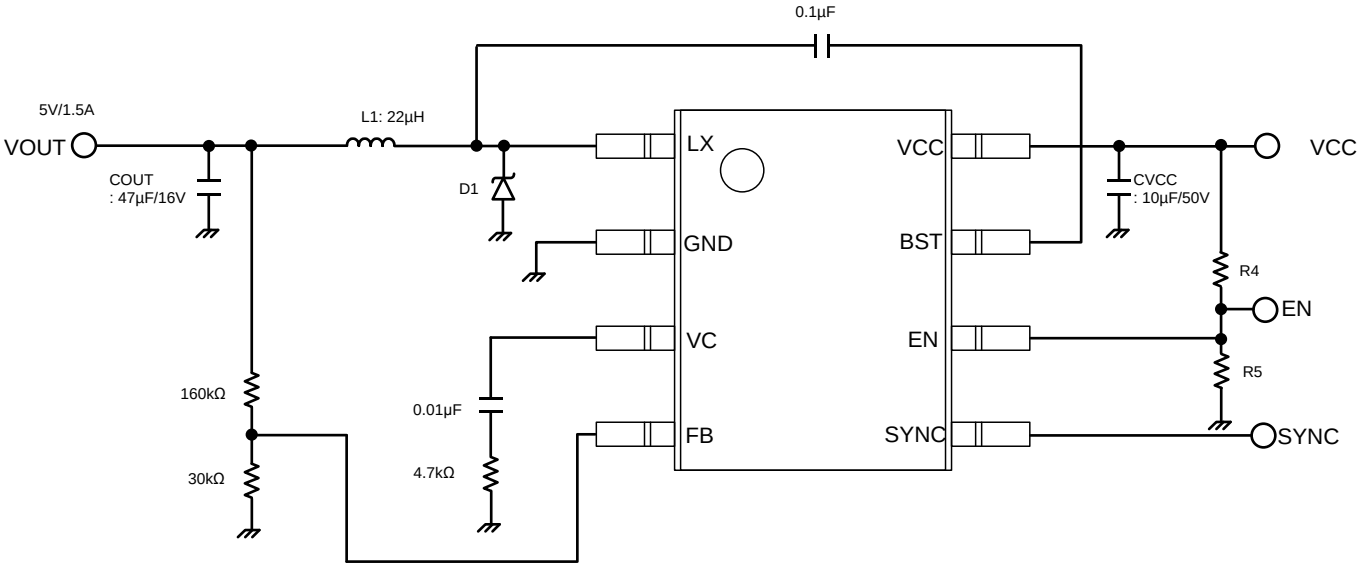

Figure 1. Typical Application Circuit

○Product structure : Silicon monolithic integrated circuit ○This product has no designed protection against radioactive rays

© 2017 ROHM Co., Ltd. All rights reserved.

Pin Configuration

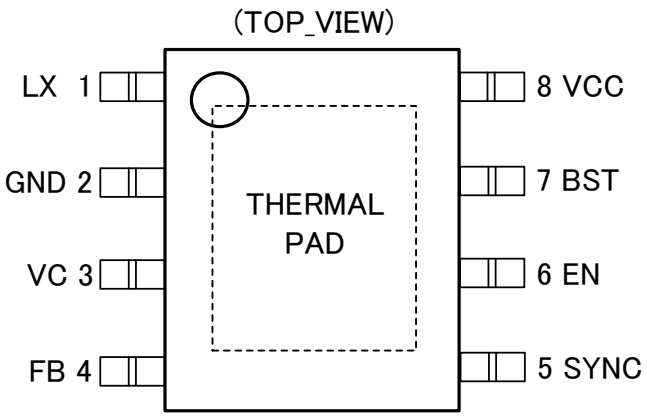

Figure 2. Pin Configuration

Pin Description

Pin No.	Pin Name	Description
1	LX	Switching terminal
2	GND	Ground terminal
3	VC	Error amplifier output terminal
4	FB	Feedback input terminal
5	SYNC	External clock input terminal
6	EN	Enable terminal
7	BST	Terminal for boot-strap capacitor
8	VCC	Power supply terminal
-	THERMAL PAD	PAD for heat dissipation. Always connect to GND.

Block Diagram

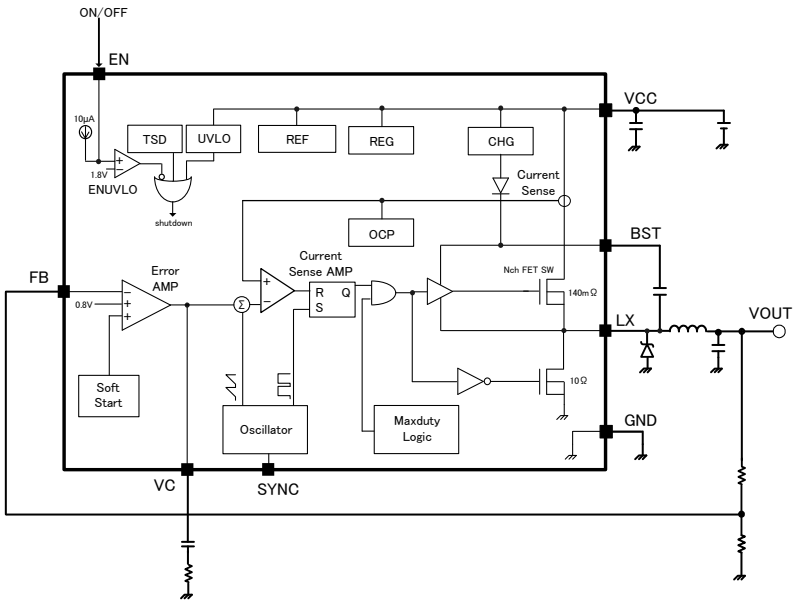

Figure 3. Block Diagram

© 2017 ROHM Co., Ltd. All rights reserved.

Description of Blocks

1. REF
   This block generates the reference voltage.

2. REG
   Regulator for internal circuit power supply.

3. CHG
   Regulator for bootstrap capacitor charging.

4. TSD
   Thermal Shutdown Protection Circuit
   When it detects the temperature exceeding Maximum Junction Temperature (Tj= 150°C), it turns off the output FET, and resets SoftStart circuit. It has a hysteresis function. When the temperature is decreased, the chip automatically returns to normal operation.

5. UVLO
   Under Voltage Lock-Out Circuit
   This prevents internal circuit error during increase and decrease of power supply voltage.
   It monitors VCC terminal voltage. When VCC voltage becomes UVLO and below, it turns OFF output FET. SoftStart circuit also resets during this time. This circuit has a hysteresis.

6. ENUVLO
   If the voltage from this terminal is below 0.3V, IC operation is OFF. If it is between 0.3V and 1.4V, internal REG circuit turns ON. If it is greater than 1.8V(Typ), the IC is operational and a hysteresis generation current of 10 μA (Typ) is sourced from the internal circuit. To turn off the IC, source current should be removed.
   When the situation without a signal to control EN terminal at the time of startup is assumed, pull down EN terminal by pull down resistor to prevent becoming the high impedance.
   Arbitrary UVLO is possible by connecting EN terminal to a voltage divider from the input voltage.

7. ErrorAMP
   This is an error amplifier circuit that detects the output signal, and outputs PWM control signal.
   Internal reference voltage is set to 0.8V(Typ).

8. SoftStart
   This is a circuit that gently raises the output voltage of the DC / DC converter to prevent in-rush current during start-up.
   SoftStart Time is 8ms (Typ) when the IC operates with the 300 kHz (Typ) internal clock.
   When the IC operates with an external clock, SoftStart Time is changed according to the oscillator frequency.

9. Oscillator
   This is a oscillation circuit with an operating frequency fixed to 300 kHz(Typ).
   By inputting external CLK to the SYNC terminal, synchronous operation of 250 kHz to 500 kHz can be achieved.
   When used in self-running mode, please connect SYNC terminal to GND.

10. Current Sense AMP
    This is a voltage - pulse width converter.
    It compares the voltage depending on the current of FET SW through the sum of the error amplifier output voltage and the slope ripple. The output then controls the width of the output pulse and outputs it to the driver.

11. Nch FET SW
    It should be used within OCP threshold 2.0A(Min) including the output current and ripple current of the inductor.

12. OCP
    The IC has a over current protection to protect the Nch FET from over current. When OCP is detected twice sequentially, the device will stop certain period of time and restart automatically.

13. MaxDuty logic
    When Nch FET SW continues being turned ON in continuous 8 cycles, the high side FET will be turned off forcibly.

© 2017 ROHM Co., Ltd. All rights reserved.

Absolute Maximum Ratings (Ta= 25°C)

Parameter	Symbol	Limit Rating	Unit
VCC-GND	VCC	45	V
BST-GND	VBST	50	V
BST-LX	VBST-LX	7	V
EN-GND	VEN	45	V
LX-GND	VLX	45	V
FB-GND	VFB	7	V
VC-GND	VVC	7	V
SYNC-GND	VSYNC	7	V
Operating Temperature range	Topr	-40 to +105	°C
Storage Temperature range	Tstg	-55 to +150	°C
Maximum Junction Temperature	Tjmax	150	°C

Caution: Operating the IC over the absolute maximum ratings may damage the IC. The damage can either be a short circuit between pins or an open circuit between pins and the internal circuitry. Therefore, it is important to consider circuit protection measures, such as adding a fuse, in case the IC is operated over the absolute maximum ratings

Thermal Resistance(*Note 1*)

Parameter	Symbol	Thermal Resistance (Typ)		Unit
		1s(*Note 3*)	2s2p(*Note 4*)	
HTSOP-J8ES				
Junction to Ambient	θ_{JA}	206.4	45.2	°C/W
Junction to Top Characterization Parameter(*Note 2*)	Ψ_{JT}	21	13	°C/W

*(Note 1)*Based on JESD51-2A(Still-Air)
*(Note 2)*The thermal characterization parameter to report the difference between junction temperature and the temperature at the top center of the outside surface of the component package.
*(Note 3)*Using a PCB board based on JESD51-3.

Layer Number of Measurement Board	Material	Board Size
Single	FR-4	114.3mm x 76.2mm x 1.57mmt

Top	
Copper Pattern	Thickness
Footprints and Traces	70µm

*(Note 4)*Using a PCB board based on JESD51-7.

Layer Number of Measurement Board	Material	Board Size	Thermal Via(*Note 5*)	
			Pitch	Diameter
4 Layers	FR-4	114.3mm x 76.2mm x 1.6mmt	1.20mm	Φ0.30mm

Top		2 Internal Layers		Bottom	
Copper Pattern	Thickness	Copper Pattern	Thickness	Copper Pattern	Thickness
Footprints and Traces	70µm	74.2mm x 74.2mm	35µm	74.2mm x 74.2mm	70µm

(Note 5) This thermal via connects with the copper pattern of all layers..

© 2017 ROHM Co., Ltd. All rights reserved.

Recommended Operating Ratings (Ta= -40°C to +105°C)

Parameter	Symbol	Rating			Unit
		Min	Typ	Max	
Power Supply Voltage	VCC	4.5 *(Note 6)*	-	42	V
Output Voltage	VOUT	0.8 *(Note 7)*	-	VCC *(Note 8)*	V
Output Current	IOUT	-	-	1.5	A
SYNC Terminal Input Frequency	f_{SYNC}	250	-	500	kHz
Input Capacitance	C_{IN} *(Note 9)*	2.2	-	-	μF
Inductance	L *(Note 10)*	11	-	-	μH

(Note 6) Voltage more than 4.65V is necessary for IC start. The IC can operate to 4.5V after IC start.
(Note 7) Restricted by Min On Time 200ns(Max).
(Note 8) Upper limit restricted by MaxDuty.
(Note 9) The capacitance is selected in the range including temperature characteristics and bias voltage effect. Refer to P18.
(Note10) Restricted by output voltage setting. Refer to P17.

© 2017 ROHM Co., Ltd. All rights reserved.

Electrical Characteristics (Unless otherwise specified: Ta= 25°C, VCC= 12V, EN= 3V)

Parameter	Symbol	Limits			Unit	Conditions
		Min	Typ	Max		
Circuit Current						
Standby Current	I_{st}	–	0	10	µA	V_{EN}= 0V
Operating Current	I_{cc}	–	1.2	2.4	mA	V_{FB}= 1.2V
Under Voltage Lock Out (UVLO)						
Detect Voltage	V_{uv}	3.65	4.00	4.35	V	VCC down sweep
Hysteresis Width	V_{uvhy}	50	200	300	mV	
Oscillator						
Oscillating Frequency	f_{osc}	270	300	330	kHz	
MaxDuty Cycle	D_{max}	95.0	97.0	99.9	%	V_{SYNC}= 0V
Error Amp						
FB Threshold Voltage	V_{FB}	0.788	0.800	0.812	V	Ta= 25°C
	V_{FBT}	0.784	0.800	0.816	V	Ta= -40 to +105°C
FB terminal Input Current	I_{FB}	-1.0	0	+1.0	µA	V_{FB}= 3.0V
FB terminal Leak Current	I_{leak}	-1.0	0	+1.0	µA	V_{FB}= 0V
SoftStart Time	t_{soft}	5.6	8.0	10.4	ms	V_{SYNC}= 0V
Output Block						
Nch FET ON Resistance(High-Side)	R_{onH}	–	140	–	mΩ	
Nch FET ON Resistance(For Pre-charge)	R_{onL}	–	10	–	Ω	
Over Current Detect Threshold	I_{ocp}	2	3	–	A	
CTL						
EN Terminal Internal REG ON-Threshold	V_{ENON}	0.3	–	1.4	V	
EN Terminal UVLO Threshold	V_{ENUV}	1.65	1.80	1.95	V	
EN Terminal Source Current	I_{EN}	9.0	10.0	11.0	µA	V_{EN}= 3V
SYNC						
SYNC Terminal Pulse Voltage High	V_{SYNCH}	2.0	–	5.5	V	
SYNC Terminal Pulse Voltage Low	V_{SYNCL}	-0.3	–	+0.8	V	
SYNC Terminal Input Current	I_{SYNC}	6	12	24	µA	V_{SYNC}= 3V

© 2017 ROHM Co., Ltd. All rights reserved.

Detailed Description

External CLK for SYNC Function

The SYNC terminal can be used to synchronize by input an external CLK signal(250kHz to 500kHz). To implement the synchronization feature, connect a CLK to SYNC terminal. Input CLK signal amplitude must have transition lower than 0.8V and higher than 2.0V on the SYNC terminal and have an ON and OFF time greater than 100ns. The rising edge of the LX will be synchronized to the falling edge of SYNC terminal signal after 3 SYNC input pulse count. During the external CLK is stop, the device transitions to self-running mode after 7 µs.

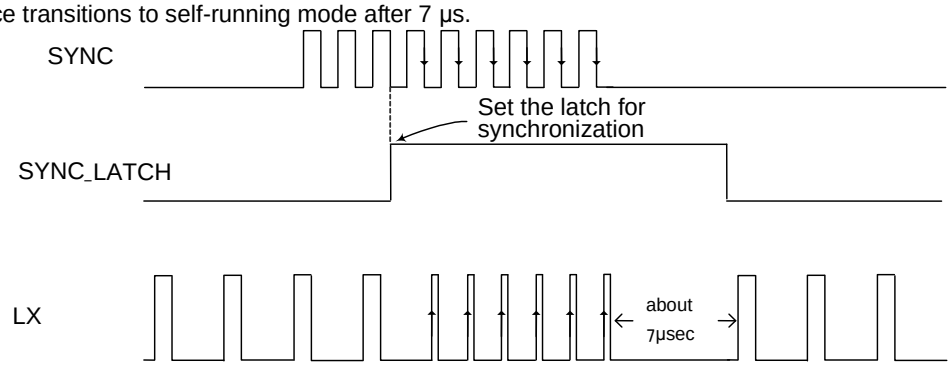

Figure 4. Frequency Synchronization Function Timing Chart

In the Case of not Using the Synchronization Function

Although the SYNC terminal is internally pulled down by a resistor, it is recommended to connect SYNC pin to ground if the synchronization function is not in use.

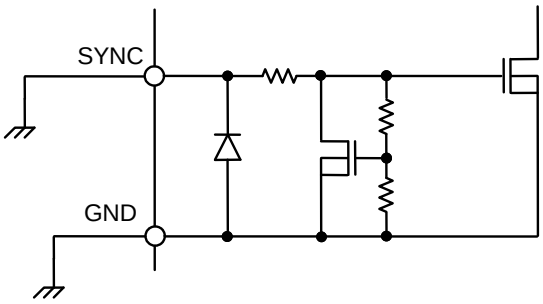

Figure 5. Circuit Diagram of SYNC Pin Not in Use

SoftStart Time When using External CLK

The SoftStart Time is synchronized with a CLK.
If synchronization is used by SYNC terminal, the SoftStart Time is expressed by the equation below.

$$t_{Soft} = \frac{300}{fosc_ex} \times 8\,[\mathrm{msec}]$$

Where:
t_{soft} is the SoftStart time [msec],
fosc_ex is the external clock [kHz]

© 2017 ROHM Co., Ltd. All rights reserved.

Detailed Description - Continued

OCP Operation

The IC has built-in over current protection (OCP) for protecting the FET.
When OCP is detected twice sequentially, the IC is turned off, the IC turns on after certain period time stop.
In the case that the synchronization function is not used, it becomes 13ms at operating frequency 300 kHz.

When using synchronization function at the time of start up, latch stop time is determined by the external CLK frequency through the following expression.

$$T_{ocp} = \frac{1}{fosc_ex} \times 4000 \quad [\text{msec}]$$

Where:
T_{ocp} is the Latch stop time [msec]
fosc_ex is the external CLK frequency [kHz]

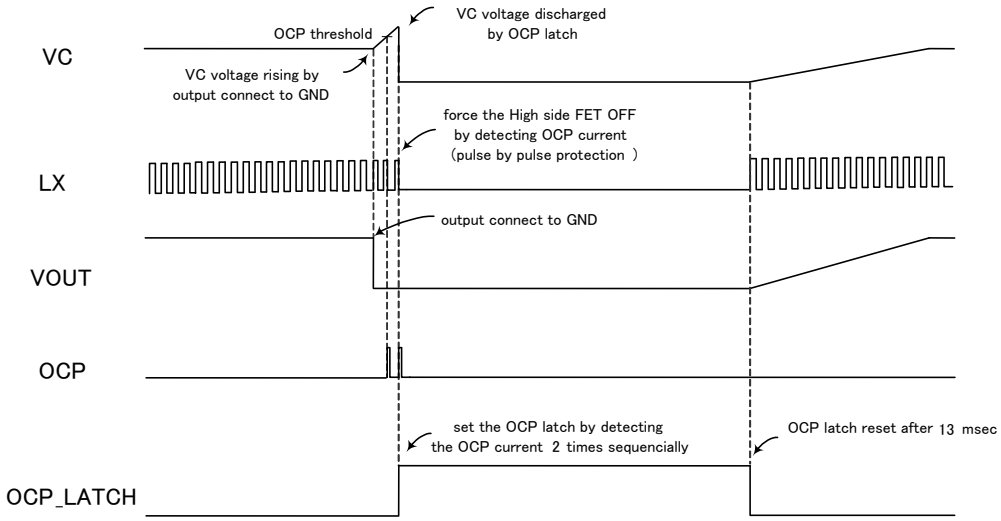

Figure 6. Timing Chart at OCP Operation

External UVLO Setting

The high precision reset function is built in at the EN terminal and arbitrary low-voltage malfunction prevention is possible by connecting EN terminal to a voltage divider from the input voltage.
If in use, please set R4 and R5 to arbitrary voltage of IC turned on (V_{start}) and turned off (V_{stop}) through the expression below.

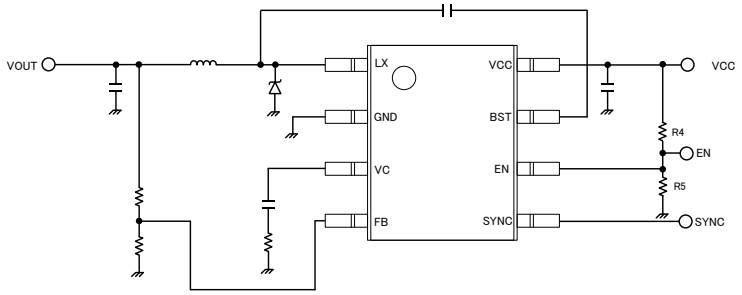

Figure 7. External UVLO Setup

$$R_4 = \frac{V_{start} - V_{stop}}{IEN} \quad [\Omega]$$

$$R_5 = \frac{VEN \times R_4}{V_{start} - VEN} \quad [\Omega]$$

IEN: EN terminal source current 10µA (Typ) VEN: EN terminal output on threshold 1.8V (Typ)
As for the example above, when VCC voltage at which the IC turns on is 15V and turns off at 14V, R4 would be 100 kΩ and R5 would be 13.6 kΩ for the voltage divider in the diagram.

© 2017 ROHM Co., Ltd. All rights reserved.

Detailed Description - Continued

The countermeasure of voltage generation over output voltage in less than 4.9 V output voltage application

IC produces at most 100μA to the output via LX terminal from BST terminal which is drive power source terminal at the following condition

Output of IC can generate at 4.9V max from BST voltage, so according to output voltage setting, output voltage is greater than setting output voltage.
In order to prevent over 100μA load in output or set a resistance level that feedback resister current is more than 100μA.

[Conditions]
IC internal regulator is operating when switching is no operation.
For example, input voltage is less than internal UVLO threshold, EN terminal voltage is condition of internal REG ON.

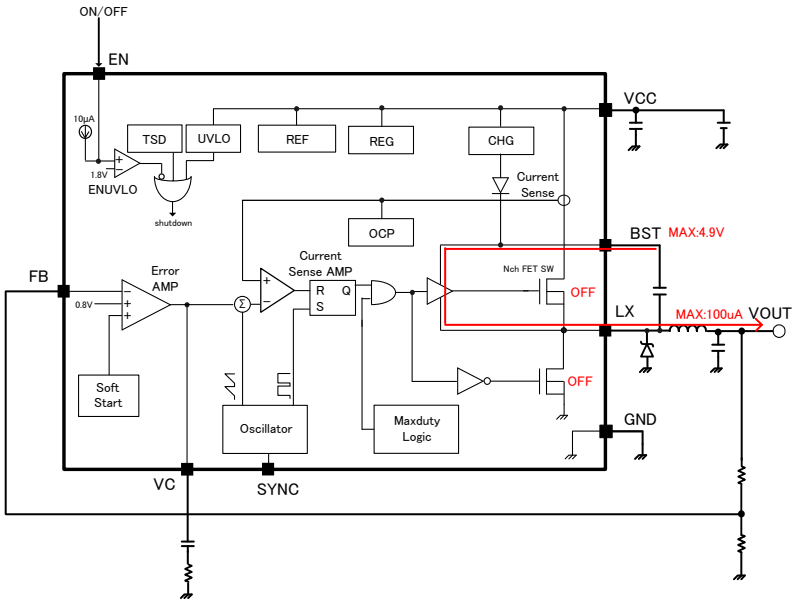

Figure 8. Current Path at the Time of the SW off and Internal REG ON

© 2017 ROHM Co., Ltd. All rights reserved.

Detailed Description - Continued

LowDrop Out Operation

For the BST terminal charge that is the drive voltage of the High-side Nch FET, input and output voltage limit is set by MaxDuty.
The IC has two operation modes: Steady operation mode and MaxDuty mode, to cope with wide duty output.
When the IC is in steady operation mode, FET is switching every period. When the IC is in MaxDuty mode, after ON pulse continue 8, FET is forced off in 700ns.

Operation Duty is calculated as follows by input and output voltage to use and a load.

$$Don = \frac{VOUT}{VCC - R_{onH} \times IOUT} \times 100 \quad [\%]$$

MaxDuty is calculated as follows by forced-off time (Typ: 300ns) and operating frequency.

$$Don_\max = (1 - 300n \times f_{osc}) \times 100 \quad [\%]$$

In the case of 300 kHz operating frequency where the SYNC terminal is not used, MaxDuty for steady operation is 91%.
If duty requirement is beyond this level, then shift to MaxDuty mode.

During MaxDuty mode, the IC is enabled to output 100% duty for 8 periods of internal CLK and exists a forced-off section of 700nsec.
MaxDuty in the MaxDuty mode is expressed by the following equation.

$$Don_\max 2 = \left(1 - \frac{700n \times f_{osc}}{8}\right) \times 100 \quad [\%]$$

In MaxDuty mode, switching operation does not occur every period, so the inductor ripple current and output ripple voltage become bigger than steady operation.
Output voltage drops in the case of duty is higher than Don_max2.

MinDuty

There are output voltage restrictions by MinDuty.
The MinDuty required is as follows with worst min on time (200nsec).

$$Don_\min = (200n \times f_{osc}) \times 100 \quad [\%]$$

Heat generation for the Light-Load

For the light-load, Pre-charge Nch FET of 10Ω (typ) in this IC pulls out charge into GND, and BST capacitor is charged.
When Pre-charge Nch FET pulls out charge, this IC has a loss by ON resistance 10Ω of Pre-charge Nch FET and the flowing current.
The loss and heat generation may be increased with the condition of high input voltage, high output voltage and low inductance value. Confirmation of efficiency and heat generation for the light-load is recommended.
When the heat generation for the light-load rises high, high inductance value is recommended.
The heat generation is decreased by dropping down the ripple current.

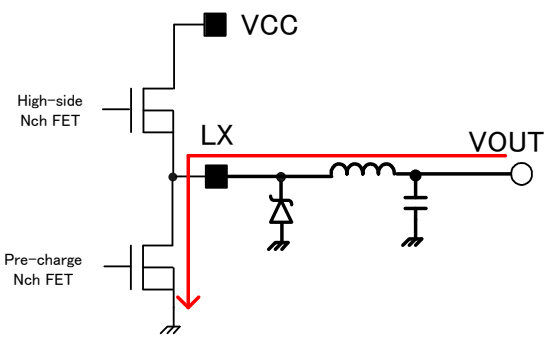

Figure 9. Current Passes when Light-Load

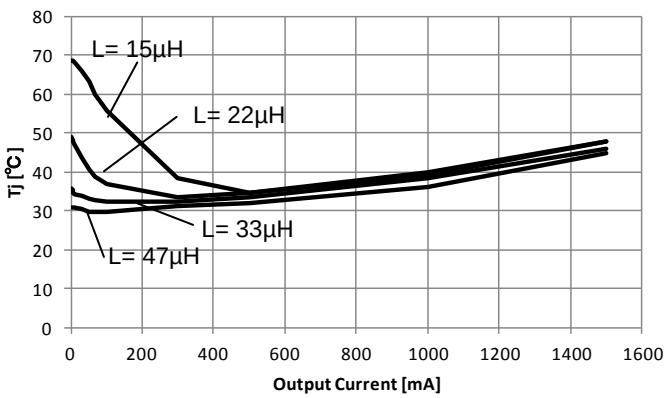

Figure 10. Junction Temperature vs Output Current
(VCC =24V, Vout= 12V)
(Rohm Board (4layers 40mm x 40mm))

© 2017 ROHM Co., Ltd. All rights reserved.

Performance Curves (Reference Data)
(Unless Otherwise Specified, Ta= 25°C, VCC= 12V)

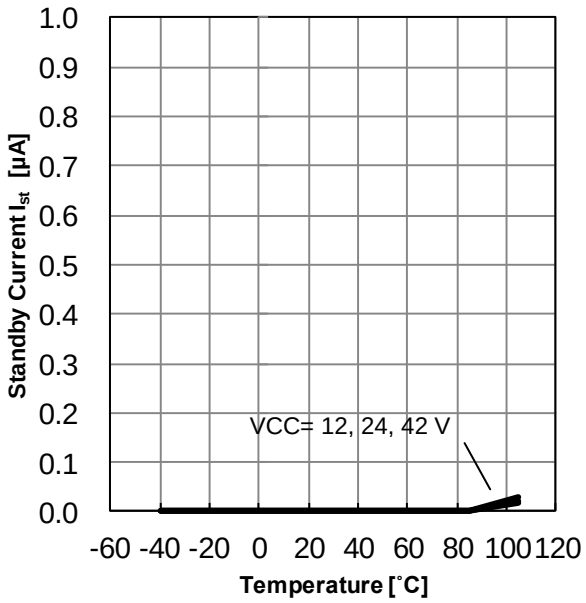

Figure 11. Standby Current vs Temperature

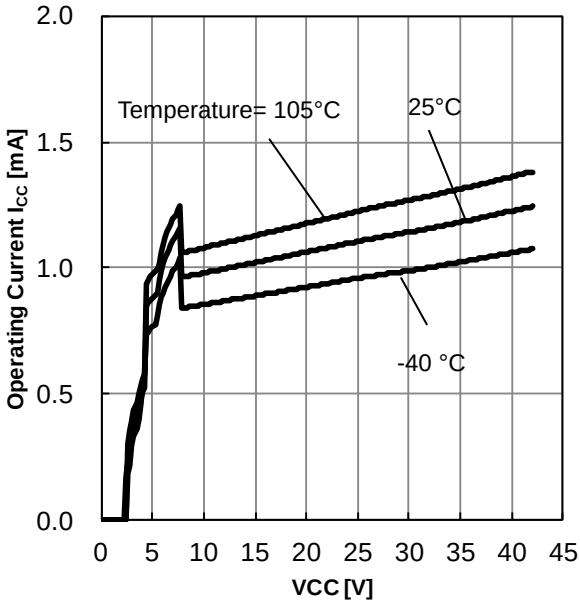

Figure 12. Operating Current vs Input Voltage (V_{FB}= 1.2V)

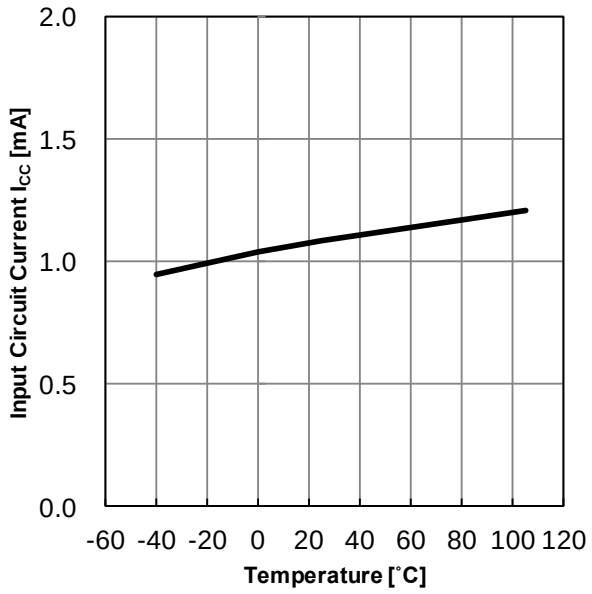

Figure 13. Input Circuit Current vs Temperature (V_{FB}= 1.2V)

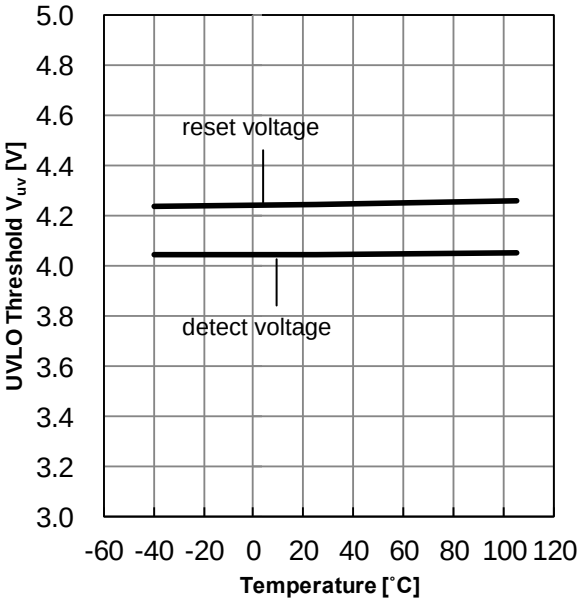

Figure 14. UVLO Threshold vs Temperature

© 2017 ROHM Co., Ltd. All rights reserved.

Performance Curves (Reference Data) - Continued

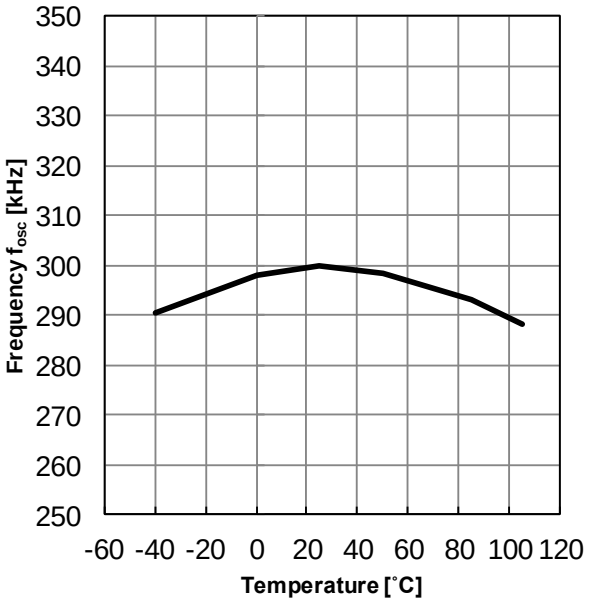

Figure 15. Frequency vs Temperature

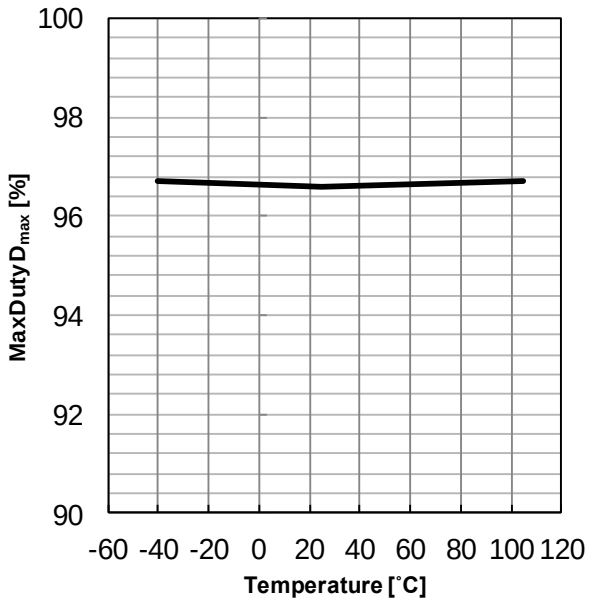

Figure 16. MaxDuty vs Temperature

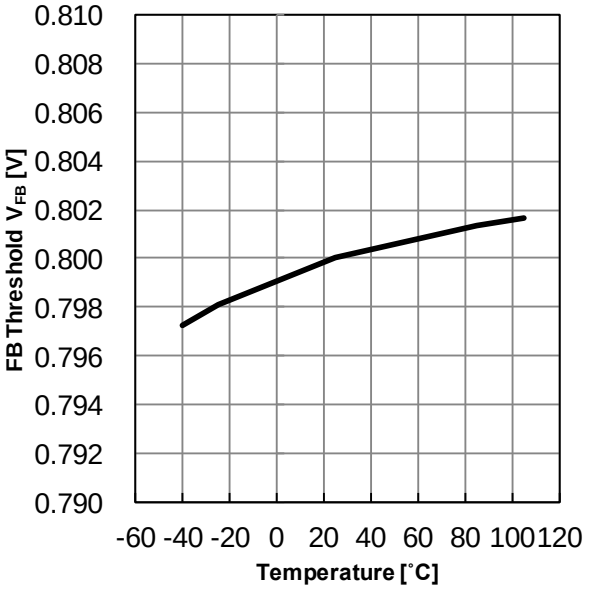

Figure 17. FB Threshold vs Temperature

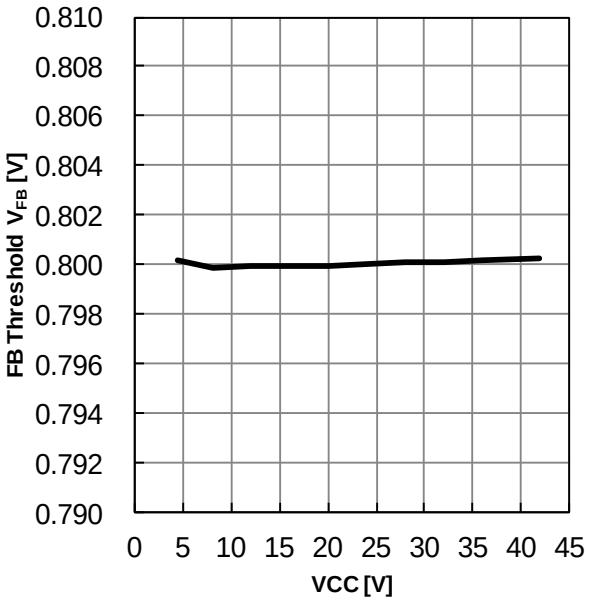

Figure 18. FB Threshold vs Input Voltage

© 2017 ROHM Co., Ltd. All rights reserved.

Performance Curves (Reference Data) - Continued

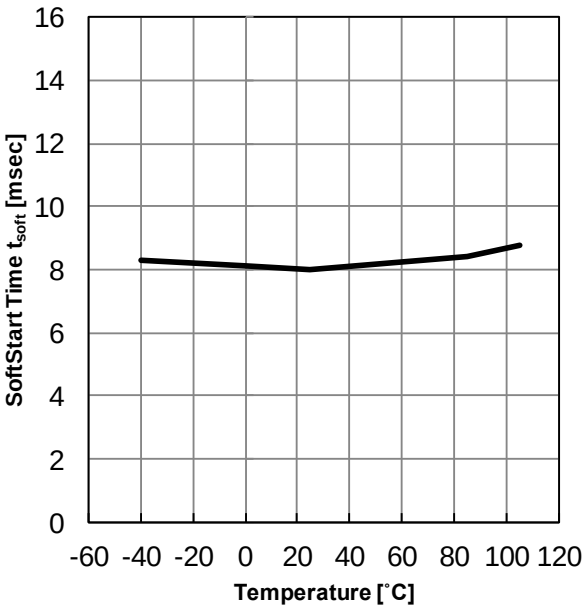

Figure 19. Soft Start Time vs Temperature

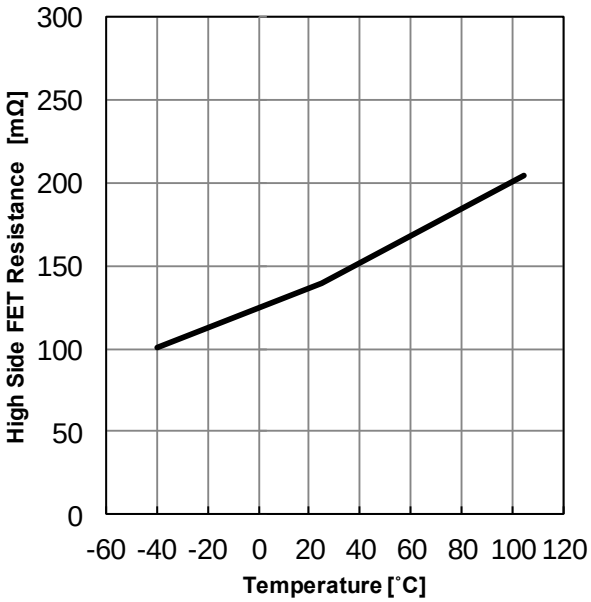

Figure 20. High Side FET Resistance vs Temperature

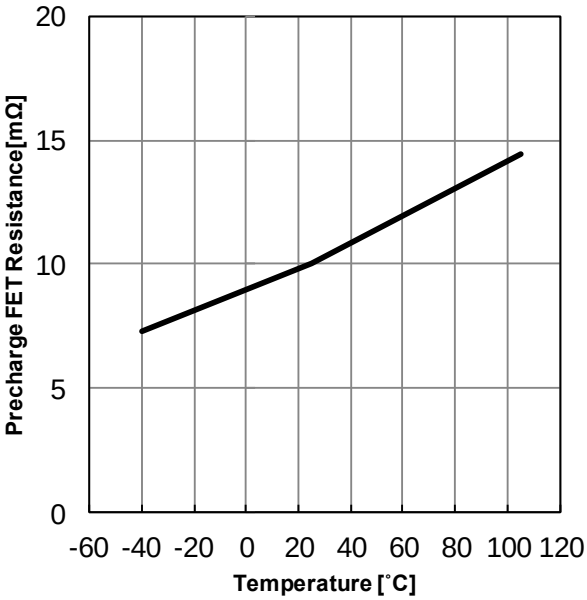

Figure 21. Precharge FET Resistance vs Temperature

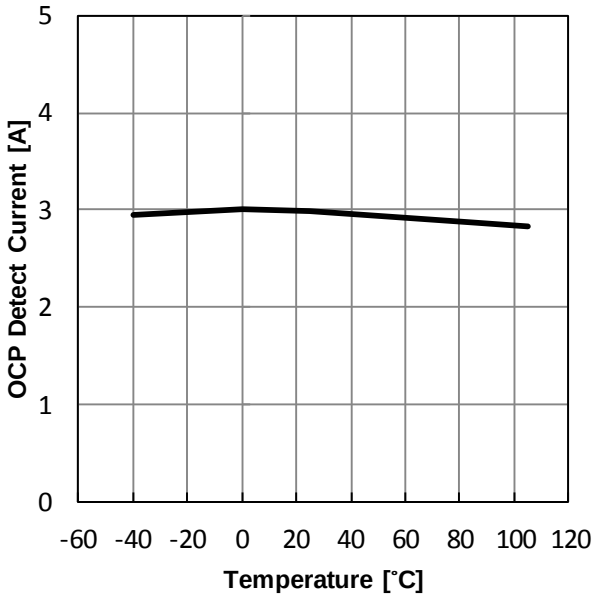

Figure 22. OCP Detect Current vs Temperature

© 2017 ROHM Co., Ltd. All rights reserved.

Performance Curves (Reference Data) – Continued

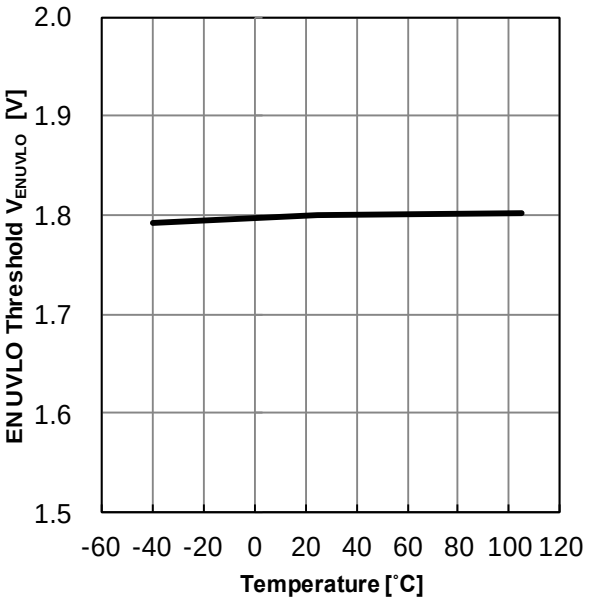

Figure 23. ENUVLO Threshold vs Temperature

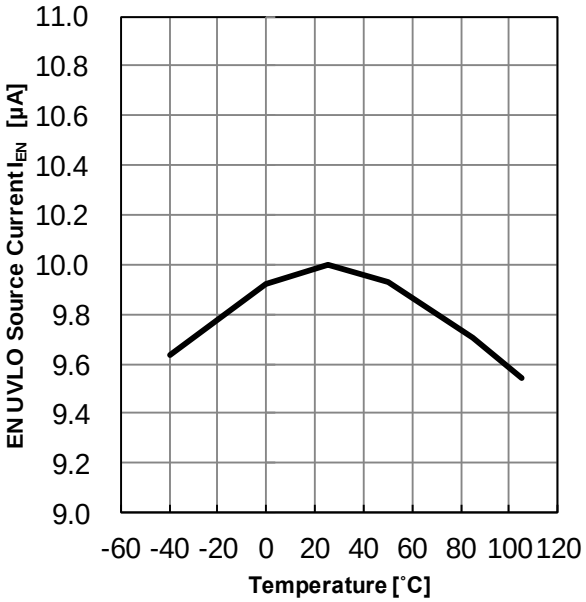

Figure 24. EN Source Current vs Temperature

© 2017 ROHM Co., Ltd. All rights reserved.

Reference Characteristics of Typical Application Circuits

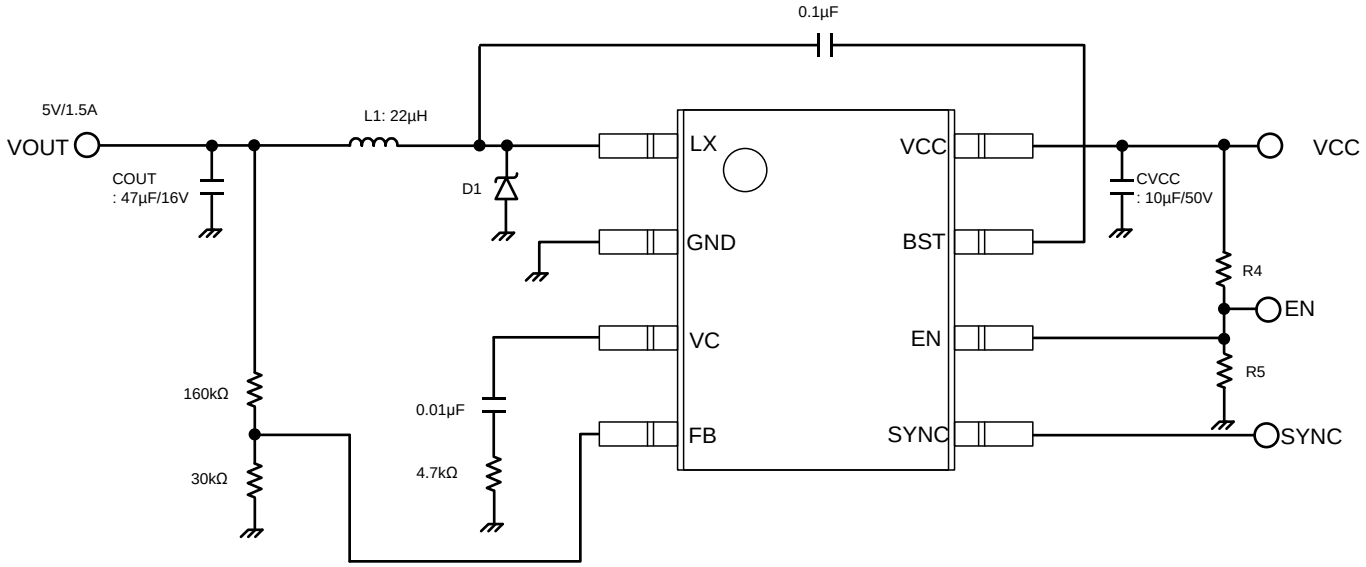

Figure 25. Typical Application Circuits

Parts :	L1	: TDK	CLF12577NIT - 220M	22µH
	CVCC	: murata	GRM32ER71H106K	10µF / 50V
	COUT	: murata	GRM32EB31C476K	47µF / 16V
	D1	: Rohm	RB050L-60	

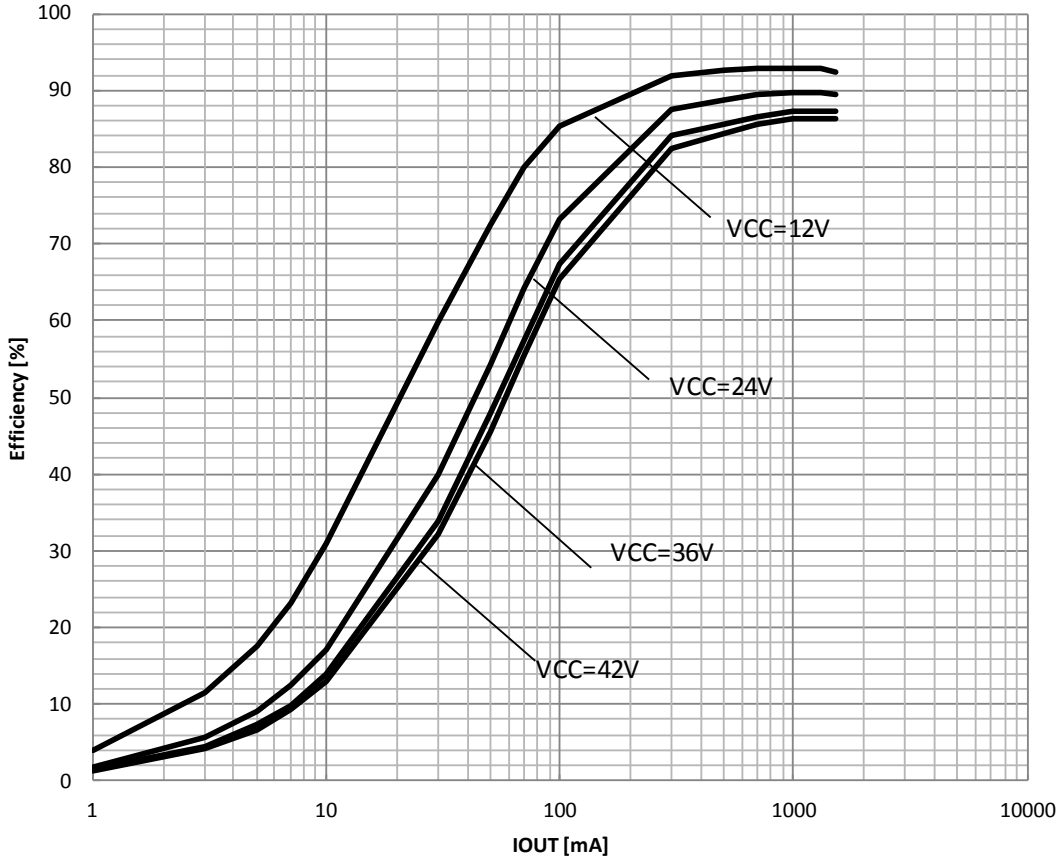

Figure 26. Efficiency vs IOUT

© 2017 ROHM Co., Ltd. All rights reserved.

Reference Characteristics of Typical Application Circuits - Continued

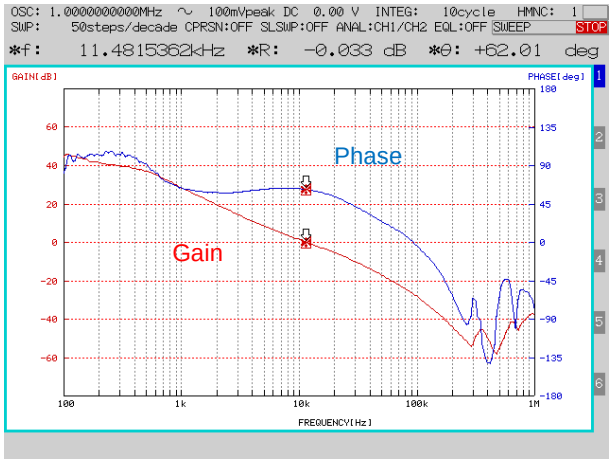

Figure 27. Frequency Characteristics (IOUT= 0.5A)

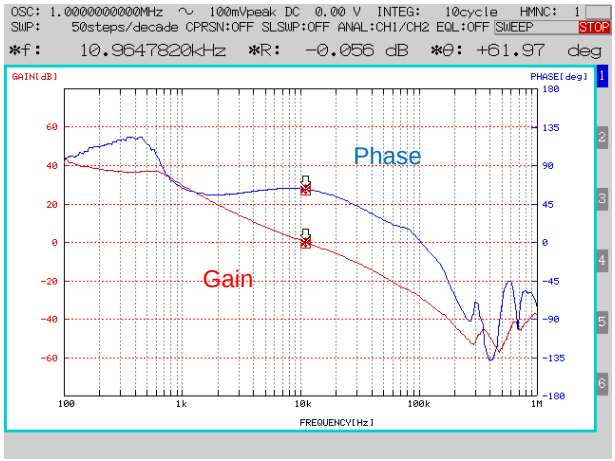

Figure 28. Frequency Characteristics (IOUT= 1.5A)

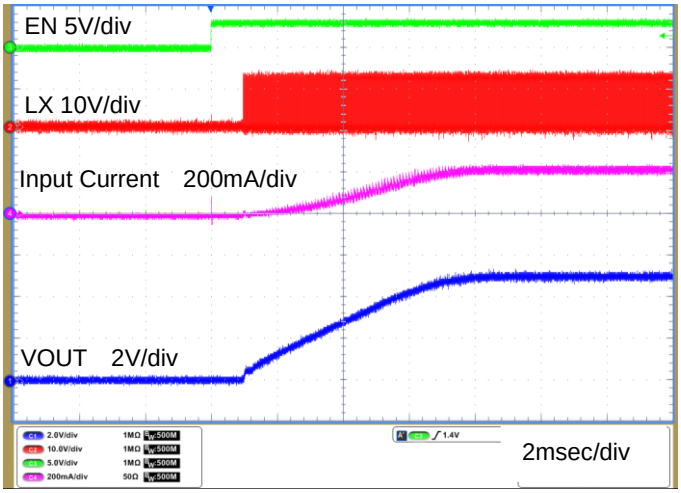

Figure 29. Startup Waveform (IOUT= 0.5A)

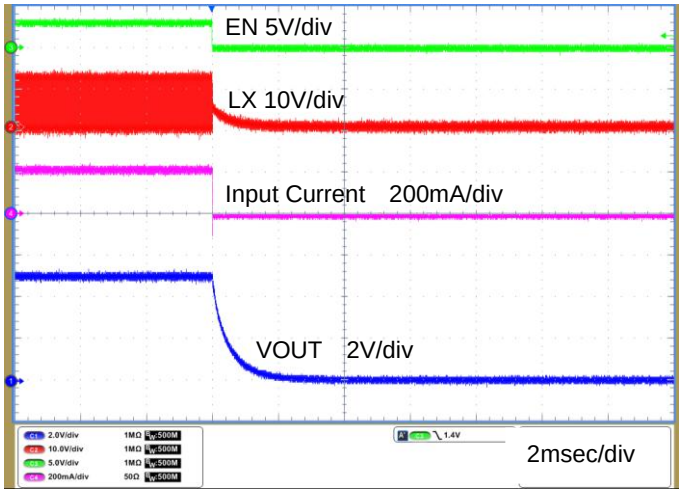

Figure 30. Shutdown Waveform (IOUT= 0.5A)

© 2017 ROHM Co., Ltd. All rights reserved.

Application Components Selecting Method

(1) Inductor

Shielded type that meets the current rating (current value from the Ipeak below), with low DCR (Direct Current Resistance element) is recommended.
The value of inductor has an effect in the inductor ripple current which causes the output ripple.
In the same formula below, this ripple current can be made small with a large value L of the inductor or as high as the switching frequency.
Peak current of internal FET is needed to be lower than OCP threshold 2.0A (min).

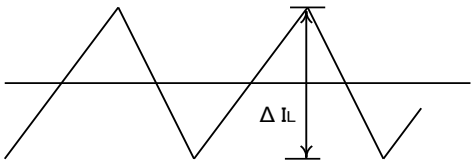

Figure 31. Inductor Current

$$I_{peak} = I_{out} + \Delta I_L/2 \quad [A] \quad (1)$$

$$\Delta I_L = \frac{V_{in}-V_{out}}{L} \times \frac{V_{out}}{V_{in}} \times \frac{1}{f} \quad [A] \quad (2)$$

Where:

ΔI_L is the Inductor ripple current, f is switching frequency

For design value of inductor ripple current, please carry out design tentatively with about 20% to 50% of the maximum output current of the IC.
The minimum value of inductance is shown in the following figure. Inductor is selected over the value of the graph.

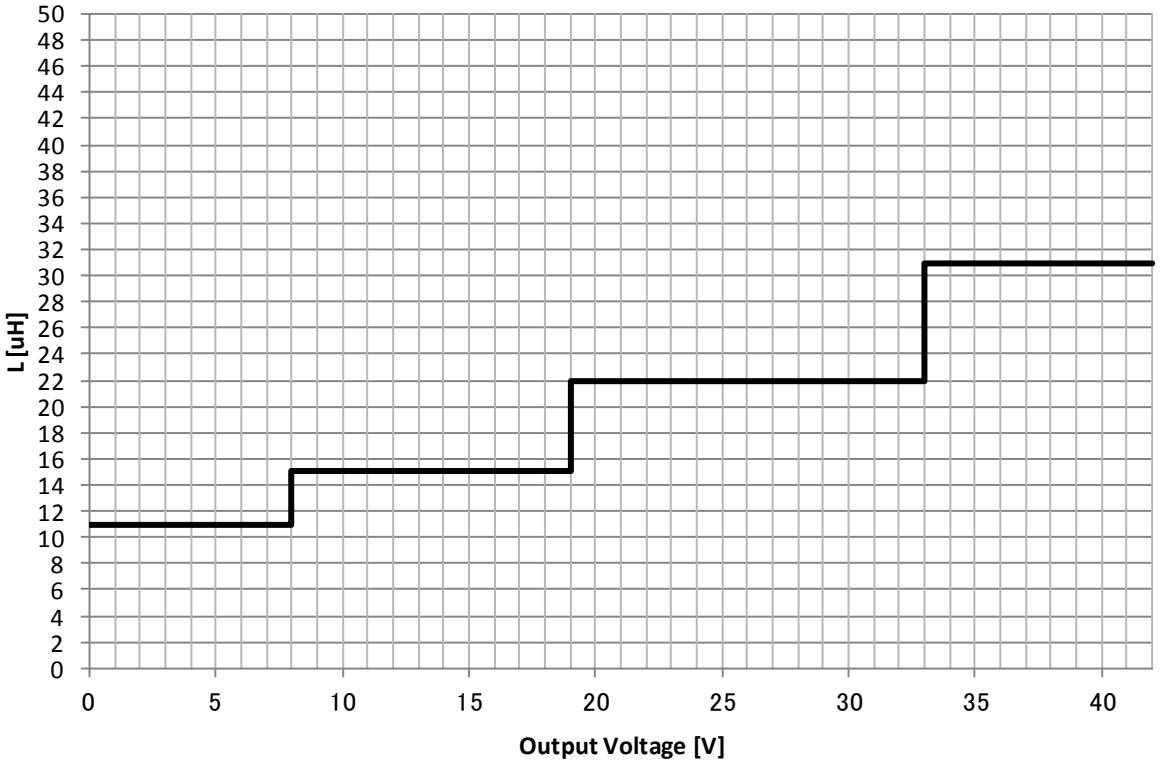

Figure 32. Output Voltage vs inductance (min)

When current that exceeds the inductor rating flows in to the inductor, the inductor causes a magnetic saturation which in turn causes a decline in efficiency and output oscillation. Please choose a inductor with a sufficient margin so that peak current does not exceed rating current of the inductor.

© 2017 ROHM Co., Ltd. All rights reserved.

Application Components Selecting Method - Continued

(2) Input Capacitor

This IC needs an input decoupling capacitor. It is recommended a low ESR ceramic capacitor over 2.2μF.
The capacitance is selected considering temperature characteristics and bias voltage effect.
The input ripple voltage is determined by input capacitance (CIN). Because the IC input voltage is decreased, consider input voltage range including ripple voltage. The input ripple voltage is estimated by the following.

$$\Delta Vin = \frac{IOUT_{(max)} \times VOUT}{CIN \times f \times VCC} + (IOUT_{(max)} \times RESR_{(max)}) \quad [V_{p\text{-}p}] \quad (3)$$

Please notice that frequency is 1/8 times in maxduty mode when the difference between input voltage and output voltage is small. Please refer to Detailed Description for the condition of maxduty mode.
The input capacitance has a sufficient value that keep input voltage in the recommended range.

Please confirm the characteristic of RMS ripple current – temperature.
RMS ripple current (I_{RMS}) is following.

$$I_{RMS} \approx IOUT \times \sqrt{\frac{VOUT}{VIN} \times \left(1 - \frac{VOUT}{VIN}\right)} \quad [A_{RMS}] \quad (4)$$

I_{RMS} has a maximum value when VIN = 2 x VOUT

$$I_{RMS} \approx \frac{IOUT}{2} \quad [A_{RMS}] \quad (5)$$

Choose an input capacitor that have enough temperature margin at the I_{RMS}.

(3) Output Capacitor

In order to reduce output ripple, a ceramic capacitor of low ESR is recommended.
Also, for capacitor rating, take into consideration the DC bias characteristics. Use a capacitor with maximum rating of sufficient margin with respect to the output voltage.
Output ripple voltage is obtained through the following formula.

$$Vpp = \Delta IL \times \frac{1}{2\pi \times f \times COUT} + \Delta IL \times R_{ESR} \quad [V] \quad (6)$$

Please set the value within allowable ripple voltage.

Confirm rush current(I_{rush}) of the start up because the output capacitance has an effect of I_{rush}.
I_{rush} is estimated in the following.

$$I_{rush} > \frac{COUT \times VOUT \times f_{osc_ex}}{T_{softstart} \times f_{osc}} + \Delta IL + IOUT_{start} \quad [A] \quad (7)$$

Where:
$T_{softstart}$ is soft start time f_{osc} is inner frequency 300kHz
f_{osc_ex} is SYNC frequency (If the SYNC function is not used, f_{osc_ex} equals to f_{osc})
$IOUT_{start}$ is output current when IC is start up.
At least, It is required that I_{rush} is less than 2A that is minimum value of OCP threshold.
The rush current is added the current caused by ERROR AMP delay actually.
Please confirm that start up rush current is lower than 2A.

© 2017 ROHM Co., Ltd. All rights reserved.

Application Components Selecting Method - Continued

(4) Output Voltage Setting
The ERROR AMP internal reference voltage is 0.8V. Output voltage is determined by next formula.

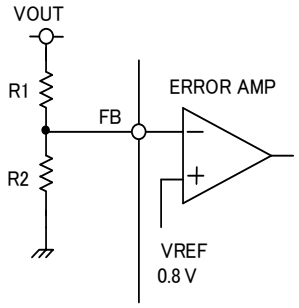

$$VOUT = \frac{(R1 + R2)}{R2} \times 0.8\ [V] \quad (8)$$

Figure 33. Voltage Feedback Resistance Setting Method

(5) Bootstrap Capacitor
Please connect a 0.1µF (Ceramic Capacitor) between BST and LX pin.
Because the absolute rating between BST-LX becomes 7V, 10V or more are recommended.

(6) About the adjustment of DC / DC Converter Frequency Characteristics

Role of phase compensation element C1, C2, R3

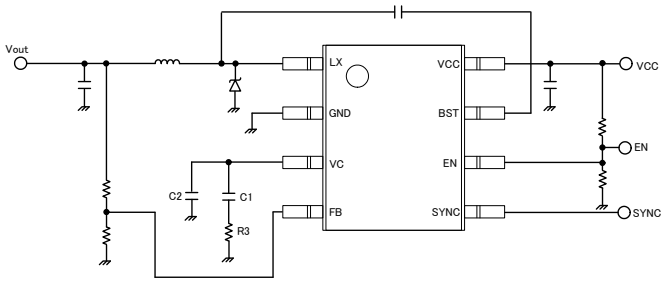

Figure 34. Phase Compensation Element

Stability and responsiveness of the loop are controlled through the VC terminal.
The combination of zero and pole that determines the stability and responsiveness is adjusted through the combination of resistor and capacitor connected in series to the VC terminal.

The DC Gain of the Voltage Feedback Loop can be calculated using the following formula.

$$Adc = RI \times G_{CS} \times A_{EA} \times \frac{V_{FB}}{Vout}$$

Here, V_{FB} is the Feedback Voltage (0.8V). A_{EA} is the Voltage Gain of Error amplifier (Typ: 80dB),
G_{CS} is the Trans-conductance of Current Detect (Typ: 10A / V), and RI is the Output Load Resistance value.

There are 2 poles in the control loop of this DC / DC.
The first occurs in the output resistance of phase compensation capacitor (C1) and error amplifier, the other one occurs in the output capacitor and load resistor.
These poles appear in the frequency written below.

$$fp1 = \frac{G_{EA}}{2\pi \times C1 \times A_{EA}}$$

$$fp2 = \frac{1}{2\pi \times COUT \times RI}$$

G_{EA} is the trans-conductance of Error amplifier (Typ: 220µA / V).

© 2017 ROHM Co., Ltd. All rights reserved.

Application Components Selecting Method - Continued

This control loop has one zero. With the zero which occurs because of phase compensation capacitor C1 and phase compensation resistor R3, the frequency as shown below appears.

$$fz1 = \frac{1}{2\pi \times C1 \times R3}$$

Also, if in this control loop the output capacitor is large, and that the ESR (RESR) is also large, has additional zero. This ESR zero that occurs due to ESR of output capacitor and its capacitance can be calculated as follows.

$$f_{ZESR} = \frac{1}{2\pi \times COUT \times RESR}$$

(f_{ZESR} : Zero frequency of ESR)

In this case, the 3rd pole is determined with the 2nd phase compensation capacitor (C2) and phase correction resistor (R3) is used in order to correct the ESR zero results in the loop gain.
This pole exists in the frequency shown below.

$$fp3 = \frac{1}{2\pi \times C2 \times R3}$$

(fp3 : Pole frequency that corrects f_{ZESR})

The target of phase compensation design is to acquire necessary band and phase margin.

It set that cross-over frequency (bandwidth):fc at which loop gain of the return loop becomes “0” .
When the cross-over frequency becomes low, power supply fluctuation response, load response, etc worsens.
when cross-over frequency becomes high, loop of phase margin becomes decrease.
In order to ensure the phase margin, cross-over frequency needs to set 1/20 or below of the switching frequency.

Selection method of Phase Compensation constant is shown below.

1. Phase compensation resistor (R3) is selected in order to set the desired cross-over frequency.
   Calculation of R3 is done using the formula below.

$$R3 = \frac{2\pi \times COUT \times fc}{G_{EA} \times G_{CS}} \times \frac{Vout}{V_{FB}}$$

2. Select phase compensation capacitor (C1).
   By matching the zero of compensation to 1/4 and below of the cross-over frequency, sufficient phase margin can be acquired. C1 can be calculated using the following formula.

$$C1 > \frac{4}{2\pi \times R3 \times fc}$$

3. Examination whether the second phase compensation capacitor C2 is necessary or not is done.
   If the ESR zero of the output capacitor is smaller than half of the switching frequency, a second phase compensation capacitor is necessary. In other words, it is the case wherein the condition below happens:

$$\frac{1}{2\pi \times COUT \times RESR} < \frac{fs}{2}$$

   In this case, add a second phase compensation capacitor C2, and match the frequency of the third pole fp3 to the frequency of ESR zero.
   C2 can be acquired using the following formula.

$$C2 = \frac{COUT \times RESR}{R3}$$

© 2017 ROHM Co., Ltd. All rights reserved.

Power Dissipation Estimate

The following formulas show how to estimate the device power dissipation under continuous mode operations. They should not be used if the device is working in the discontinuous conduction mode. IC internal loss is shown below.

1) Conduction loss：Pcon= $IOUT^2$ x RonH x VOUT / VCC
2) Switching loss：Psw= 19×10^{-9} x VCC x IOUT x fsw
3) Gate charge loss：Pgc= 9.0×10^{-9} x fsw
4) Quiescent current loss：Pq= ICC x VCC

IOUT is the output current , RonH is the on-resistance of the high-side NchFET, VOUT is the output voltage.
VCC is the input voltage, fsw is the switching frequency.

Power dissipation of IC is the sum of above dissipation, and shown below.
Pd= Pcon + Psw + Pgc + Pq
Tj is shown below.
Tj= Ta + θja x Pd

The junction temperature is not more than Tjmax =150°C, so temperature design is needed sufficient margin.

© 2017 ROHM Co., Ltd. All rights reserved.

PCB Layout

Layout is a critical portion of a good power supply design. Here are several signals paths that conduct fast changing currents or voltages that can interact with stray inductance or parasitic capacitance to generate noise or degrade the power supply's performance. To help eliminate these problems, the VCC terminal should be bypassed to ground with a low ESR ceramic bypass capacitor. Care should be taken to minimize the loop area formed by the bypass capacitor, VCC terminal, and anode of the catch diode.

The thermal pad should be connected to any internal PCB ground plane using multiple VIAs directly under the IC. The LX pin should be routed to the cathode of the catch diode and to the output inductor. Since the LX connection is the switching node, the catch diode and output inductor should be located close to the LX pin, and the area of the PCB conductor is minimized to prevent excessive capacitive coupling.

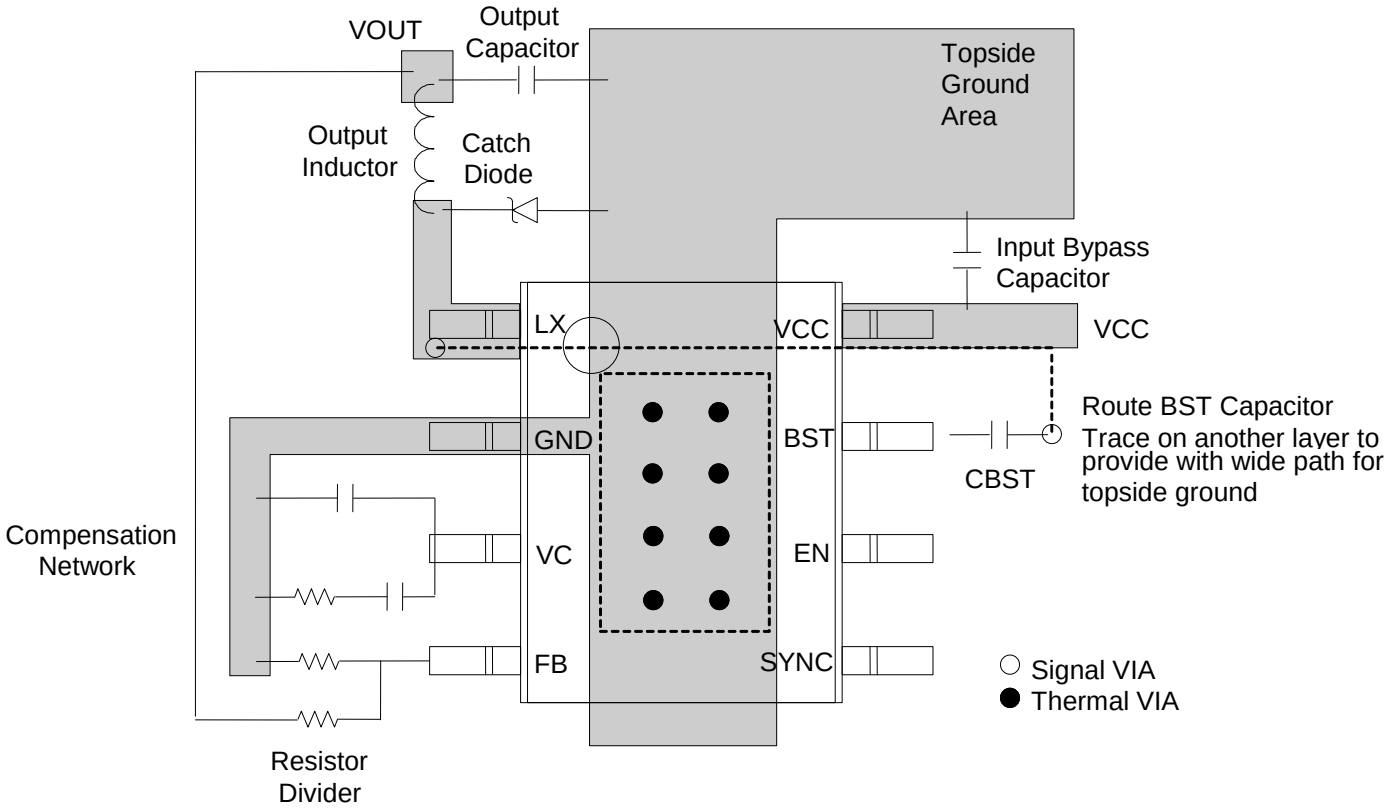

Figure 35. Reference Evaluation Board Pattern

© 2017 ROHM Co., Ltd. All rights reserved.

I/O Equivalent Schematic

Pin. No	Pin. Name	Pin Equivalent Schematic
1 2 7 8	LX GND BST VCC	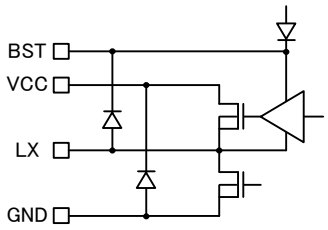
3	VC	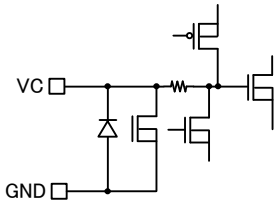
4	FB	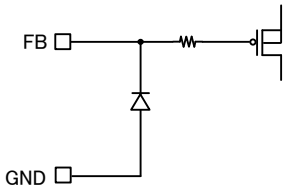

Pin. No	Pin. Name	Pin Equivalent Schematic
5	SYNC	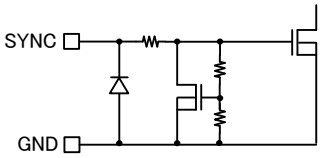
6	EN	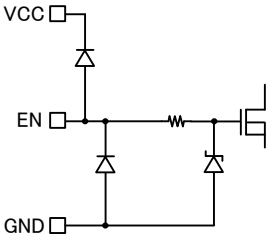

© 2017 ROHM Co., Ltd. All rights reserved.

Operational Notes

1. **Reverse Connection of Power Supply**
   Connecting the power supply in reverse polarity can damage the IC. Take precautions against reverse polarity when connecting the power supply, such as mounting an external diode between the power supply and the IC's power supply pins.

2. **Power Supply Lines**
   Design the PCB layout pattern to provide low impedance supply lines. Furthermore, connect a capacitor to ground at all power supply pins. Consider the effect of temperature and aging on the capacitance value when using electrolytic capacitors.

3. **Ground Voltage**
   Ensure that no pins are at a voltage below that of the ground pin at any time, even during transient condition.
   In addition, including transition phenomenon, it prevents all pin except GND pin from not becoming lower than GND pin voltage.

4. **Ground Wiring Pattern**
   When using both small-signal and large-current ground traces, the two ground traces should be routed separately but connected to a single ground at the reference point of the application board to avoid fluctuations in the small-signal ground caused by large currents. Also ensure that the ground traces of external components do not cause variations on the ground voltage. The ground lines must be as short and thick as possible to reduce line impedance.

5. **Thermal Consideration**
   Should by any chance the maximum junction temperature rating be exceeded the rise in temperature of the chip may result in deterioration of the properties of the chip. In case of exceeding this absolute maximum rating, increase the board size and copper area to prevent exceeding the maximum junction temperature rating.

6. **Recommended Operating Conditions**
   These conditions represent a range within which the expected characteristics of the IC can be approximately obtained. The electrical characteristics are guaranteed under the conditions of each parameter.

7. **Inrush Current**
   When power is first supplied to the IC, it is possible that the internal logic may be unstable and inrush current may flow instantaneously due to the internal powering sequence and delays, especially if the IC has more than one power supply. Therefore, give special consideration to power coupling capacitance, power wiring, width of ground wiring, and routing of connections.

8. **Operation Under Strong Electromagnetic Field**
   Operating the IC in the presence of a strong electromagnetic field may cause the IC to malfunction.

9. **Testing on Application Boards**
   When testing the IC on an application board, connecting a capacitor directly to a low-impedance output pin may subject the IC to stress. Always discharge capacitors completely after each process or step. The IC's power supply should always be turned off completely before connecting or removing it from the test setup during the inspection process. To prevent damage from static discharge, ground the IC during assembly and use similar precautions during transport and storage.

© 2017 ROHM Co., Ltd. All rights reserved.

Operational Notes – Continued

10. Inter-Pin Short and Mounting Errors

Ensure that the direction and position are correct when mounting the IC on the PCB. Incorrect mounting may result in damaging the IC. Avoid nearby pins being shorted to each other especially to ground, power supply and output pin. Inter-pin shorts could be due to many reasons such as metal particles, water droplets (in very humid environment) and unintentional solder bridge deposited in between pins during assembly to name a few.

11. Unused Input Pins

Input pins of an IC are often connected to the gate of a MOS transistor. The gate has extremely high impedance and extremely low capacitance. If left unconnected, the electric field from the outside can easily charge it. The small charge acquired in this way is enough to produce a significant effect on the conduction through the transistor and cause unexpected operation of the IC. So unless otherwise specified, unused input pins should be connected to the power supply or ground line.

12. Regarding the Input Pin of the IC

This monolithic IC contains P+ isolation and P substrate layers between adjacent elements in order to keep them isolated. P-N junctions are formed at the intersection of the P layers with the N layers of other elements, creating a parasitic diode or transistor. For example (refer to figure below):

When GND > Pin A and GND > Pin B, the P-N junction operates as a parasitic diode.
When GND > Pin B, the P-N junction operates as a parasitic transistor.

Parasitic diodes inevitably occur in the structure of the IC. The operation of parasitic diodes can result in mutual interference among circuits, operational faults, or physical damage. Therefore, conditions that cause these diodes to operate, such as applying a voltage lower than the GND voltage to an input pin (and thus to the P substrate) should be avoided.

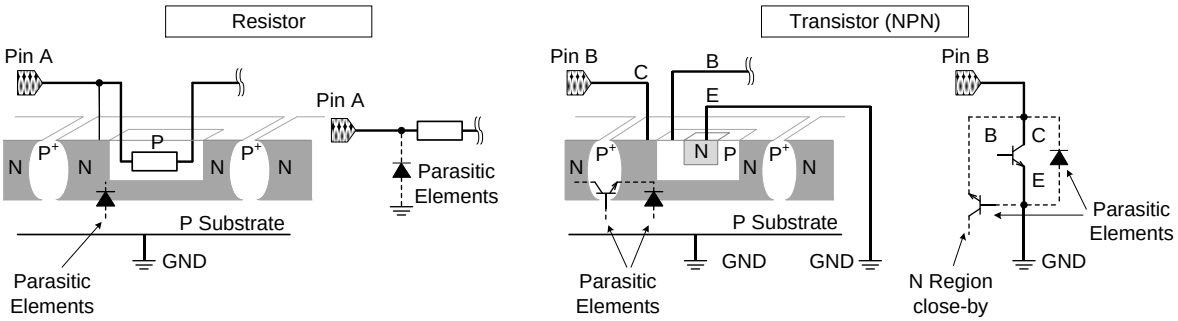

Figure 36. Example of Monolithic IC Structure

13. Ceramic Capacitor

When using a ceramic capacitor, determine the dielectric constant considering the change of capacitance with temperature and the decrease in nominal capacitance due to DC bias and others.

14. Area of Safe Operation (ASO)

Operate the IC such that the output voltage, output current, and the maximum junction temperature rating are all within the Area of Safe Operation (ASO).

15. Thermal Shutdown Circuit(TSD)

This IC has a built-in thermal shutdown circuit that prevents heat damage to the IC. Normal operation should always be within the IC's maximum junction temperature rating. If however the rating is exceeded for a continued period, the junction temperature (Tj) will rise which will activate the TSD circuit that will turn OFF all output pins. When the Tj falls below the TSD threshold, the circuits are automatically restored to normal operation.
Note that the TSD circuit operates in a situation that exceeds the absolute maximum ratings and therefore, under no circumstances, should the TSD circuit be used in a set design or for any purpose other than protecting the IC from heat damage.

16. Over Current Protection Circuit (OCP)

This IC incorporates an integrated overcurrent protection circuit that is activated when the load is shorted. This protection circuit is effective in preventing damage due to sudden and unexpected incidents. However, the IC should not be used in applications characterized by continuous operation or transitioning of the protection circuit.

© 2017 ROHM Co., Ltd. All rights reserved.

Ordering Part Information

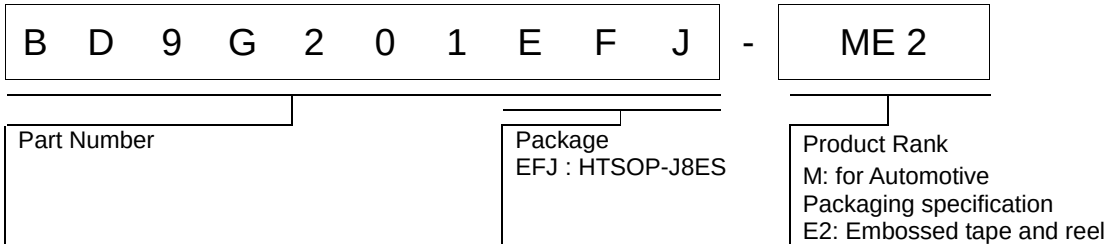

Marking Diagram

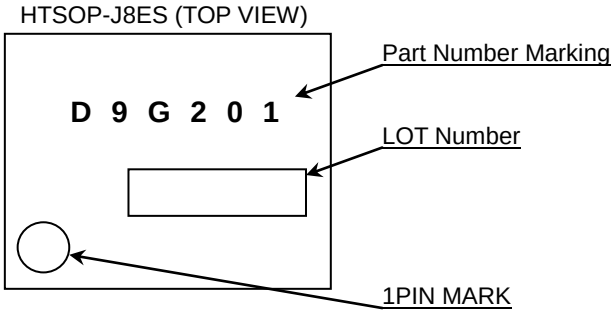

© 2017 ROHM Co., Ltd. All rights reserved.

Physical Dimension, Tape and Reel Information

Package Name	HTSOP-J8ES

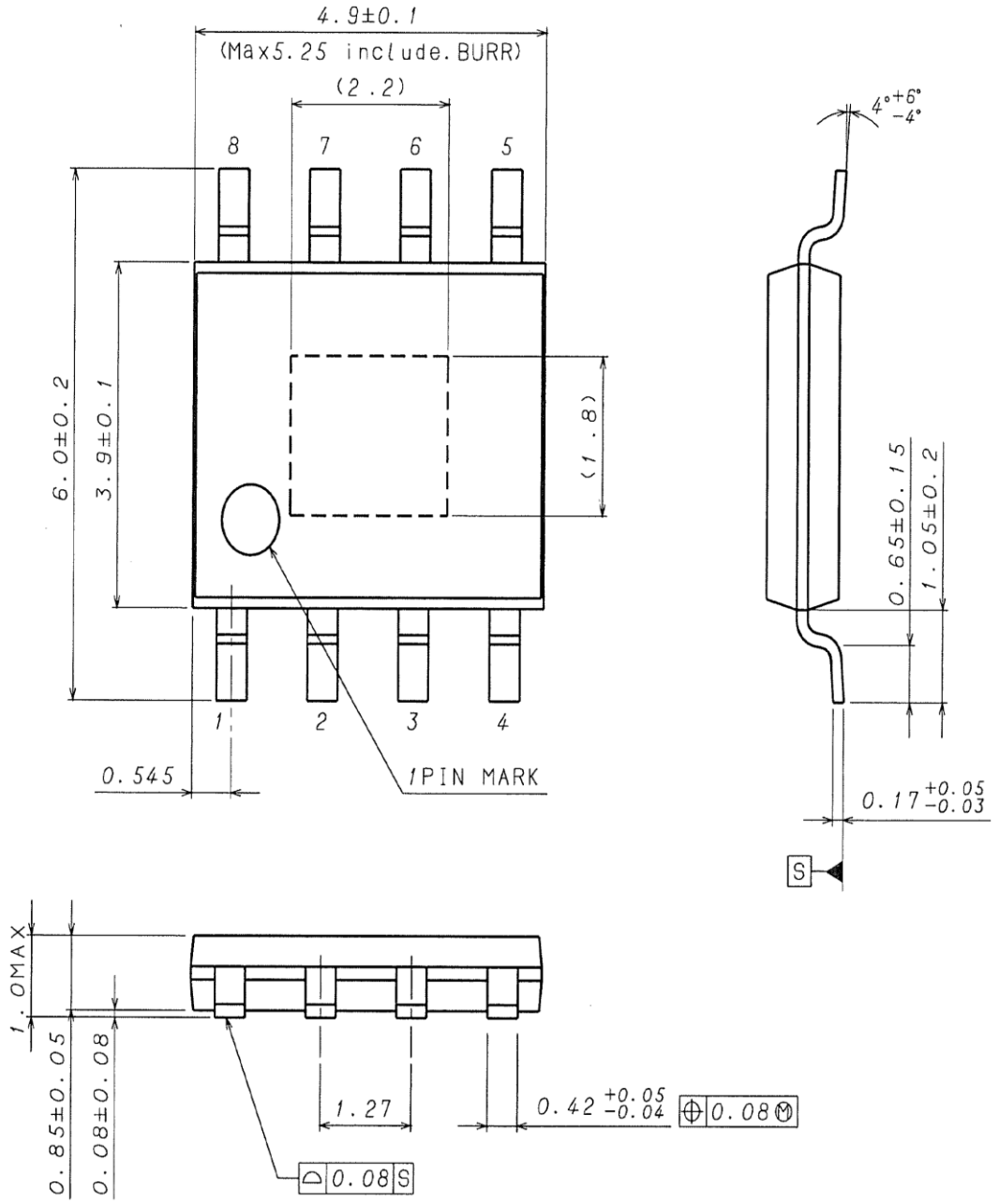

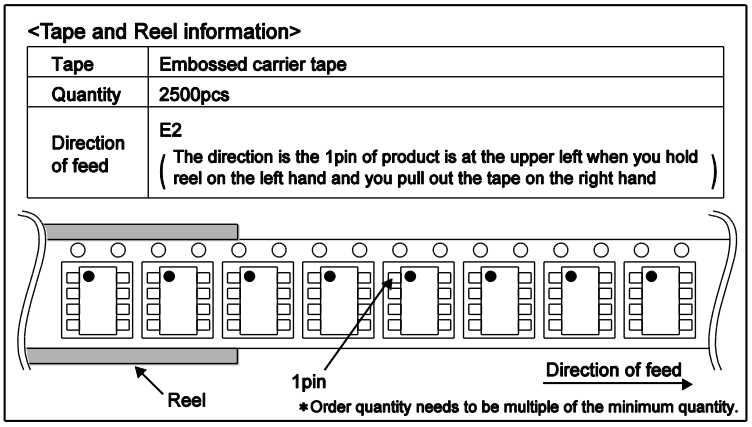

<Tape and Reel information>

Tape	Embossed carrier tape
Quantity	2500pcs
Direction of feed	E2 (The direction is the 1pin of product is at the upper left when you hold reel on the left hand and you pull out the tape on the right hand)

∗Order quantity needs to be multiple of the minimum quantity.

© 2017 ROHM Co., Ltd. All rights reserved.

Revision History

Date	Revision	Changes
10.May.2017	001	Create new Rev.001

© 2017 ROHM Co., Ltd. All rights reserved.

Notice

Precaution on using ROHM Products

1. If you intend to use our Products in devices requiring extremely high reliability (such as medical equipment (Note 1), aircraft/spacecraft, nuclear power controllers, etc.) and whose malfunction or failure may cause loss of human life, bodily injury or serious damage to property ("Specific Applications"), please consult with the ROHM sales representative in advance. Unless otherwise agreed in writing by ROHM in advance, ROHM shall not be in any way responsible or liable for any damages, expenses or losses incurred by you or third parties arising from the use of any ROHM's Products for Specific Applications.

(Note1) Medical Equipment Classification of the Specific Applications

JAPAN	USA	EU	CHINA
CLASSⅢ	CLASSⅢ	CLASSⅡb	CLASSⅢ
CLASSⅣ		CLASSⅢ	

2. ROHM designs and manufactures its Products subject to strict quality control system. However, semiconductor products can fail or malfunction at a certain rate. Please be sure to implement, at your own responsibilities, adequate safety measures including but not limited to fail-safe design against the physical injury, damage to any property, which a failure or malfunction of our Products may cause. The following are examples of safety measures:
   [a] Installation of protection circuits or other protective devices to improve system safety
   [b] Installation of redundant circuits to reduce the impact of single or multiple circuit failure

3. Our Products are not designed under any special or extraordinary environments or conditions, as exemplified below. Accordingly, ROHM shall not be in any way responsible or liable for any damages, expenses or losses arising from the use of any ROHM's Products under any special or extraordinary environments or conditions. If you intend to use our Products under any special or extraordinary environments or conditions (as exemplified below), your independent verification and confirmation of product performance, reliability, etc, prior to use, must be necessary:
   [a] Use of our Products in any types of liquid, including water, oils, chemicals, and organic solvents
   [b] Use of our Products outdoors or in places where the Products are exposed to direct sunlight or dust
   [c] Use of our Products in places where the Products are exposed to sea wind or corrosive gases, including Cl_2, H_2S, NH_3, SO_2, and NO_2
   [d] Use of our Products in places where the Products are exposed to static electricity or electromagnetic waves
   [e] Use of our Products in proximity to heat-producing components, plastic cords, or other flammable items
   [f] Sealing or coating our Products with resin or other coating materials
   [g] Use of our Products without cleaning residue of flux (even if you use no-clean type fluxes, cleaning residue of flux is recommended); or Washing our Products by using water or water-soluble cleaning agents for cleaning residue after soldering
   [h] Use of the Products in places subject to dew condensation

4. The Products are not subject to radiation-proof design.

5. Please verify and confirm characteristics of the final or mounted products in using the Products.

6. In particular, if a transient load (a large amount of load applied in a short period of time, such as pulse. is applied, confirmation of performance characteristics after on-board mounting is strongly recommended. Avoid applying power exceeding normal rated power; exceeding the power rating under steady-state loading condition may negatively affect product performance and reliability.

7. De-rate Power Dissipation depending on ambient temperature. When used in sealed area, confirm that it is the use in the range that does not exceed the maximum junction temperature.

8. Confirm that operation temperature is within the specified range described in the product specification.

9. ROHM shall not be in any way responsible or liable for failure induced under deviant condition from what is defined in this document.

Precaution for Mounting / Circuit board design

1. When a highly active halogenous (chlorine, bromine, etc.) flux is used, the residue of flux may negatively affect product performance and reliability.

2. In principle, the reflow soldering method must be used on a surface-mount products, the flow soldering method must be used on a through hole mount products. If the flow soldering method is preferred on a surface-mount products, please consult with the ROHM representative in advance.

For details, please refer to ROHM Mounting specification

© 2015 ROHM Co., Ltd. All rights reserved.

Precautions Regarding Application Examples and External Circuits

1. If change is made to the constant of an external circuit, please allow a sufficient margin considering variations of the characteristics of the Products and external components, including transient characteristics, as well as static characteristics.

2. You agree that application notes, reference designs, and associated data and information contained in this document are presented only as guidance for Products use. Therefore, in case you use such information, you are solely responsible for it and you must exercise your own independent verification and judgment in the use of such information contained in this document. ROHM shall not be in any way responsible or liable for any damages, expenses or losses incurred by you or third parties arising from the use of such information.

Precaution for Electrostatic

This Product is electrostatic sensitive product, which may be damaged due to electrostatic discharge. Please take proper caution in your manufacturing process and storage so that voltage exceeding the Products maximum rating will not be applied to Products. Please take special care under dry condition (e.g. Grounding of human body / equipment / solder iron, isolation from charged objects, setting of Ionizer, friction prevention and temperature / humidity control).

Precaution for Storage / Transportation

1. Product performance and soldered connections may deteriorate if the Products are stored in the places where:
   [a] the Products are exposed to sea winds or corrosive gases, including Cl2, H2S, NH3, SO2, and NO2
   [b] the temperature or humidity exceeds those recommended by ROHM
   [c] the Products are exposed to direct sunshine or condensation
   [d] the Products are exposed to high Electrostatic

2. Even under ROHM recommended storage condition, solderability of products out of recommended storage time period may be degraded. It is strongly recommended to confirm solderability before using Products of which storage time is exceeding the recommended storage time period.

3. Store / transport cartons in the correct direction, which is indicated on a carton with a symbol. Otherwise bent leads may occur due to excessive stress applied when dropping of a carton.

4. Use Products within the specified time after opening a humidity barrier bag. Baking is required before using Products of which storage time is exceeding the recommended storage time period.

Precaution for Product Label

A two-dimensional barcode printed on ROHM Products label is for ROHM's internal use only.

Precaution for Disposition

When disposing Products please dispose them properly using an authorized industry waste company.

Precaution for Foreign Exchange and Foreign Trade act

Since concerned goods might be fallen under listed items of export control prescribed by Foreign exchange and Foreign trade act, please consult with ROHM in case of export.

Precaution Regarding Intellectual Property Rights

1. All information and data including but not limited to application example contained in this document is for reference only. ROHM does not warrant that foregoing information or data will not infringe any intellectual property rights or any other rights of any third party regarding such information or data.

2. ROHM shall not have any obligations where the claims, actions or demands arising from the combination of the Products with other articles such as components, circuits, systems or external equipment (including software).

3. No license, expressly or implied, is granted hereby under any intellectual property rights or other rights of ROHM or any third parties with respect to the Products or the information contained in this document. Provided, however, that ROHM will not assert its intellectual property rights or other rights against you or your customers to the extent necessary to manufacture or sell products containing the Products, subject to the terms and conditions herein.

Other Precaution

1. This document may not be reprinted or reproduced, in whole or in part, without prior written consent of ROHM.

2. The Products may not be disassembled, converted, modified, reproduced or otherwise changed without prior written consent of ROHM.

3. In no event shall you use in any way whatsoever the Products and the related technical information contained in the Products or this document for any military purposes, including but not limited to, the development of mass-destruction weapons.

4. The proper names of companies or products described in this document are trademarks or registered trademarks of ROHM, its affiliated companies or third parties.

© 2015 ROHM Co., Ltd. All rights reserved.

General Precaution

1. Before you use our Products, you are requested to carefully read this document and fully understand its contents. ROHM shall not be in any way responsible or liable for failure, malfunction or accident arising from the use of any ROHM's Products against warning, caution or note contained in this document.

2. All information contained in this document is current as of the issuing date and subject to change without any prior notice. Before purchasing or using ROHM's Products, please confirm the latest information with a ROHM sales representative.

3. The information contained in this document is provided on an "as is" basis and ROHM does not warrant that all information contained in this document is accurate and/or error-free. ROHM shall not be in any way responsible or liable for any damages, expenses or losses incurred by you or third parties resulting from inaccuracy or errors of or concerning such information.

© 2015 ROHM Co., Ltd. All rights reserved.

Mouser Electronics

Authorized Distributor

Click to View Pricing, Inventory, Delivery & Lifecycle Information:

ROHM Semiconductor:

BD9G201EFJ-ME2