OA172 Series

AC Fan - 115V, 230V
172 x 51mm (6.7"x 2.0")

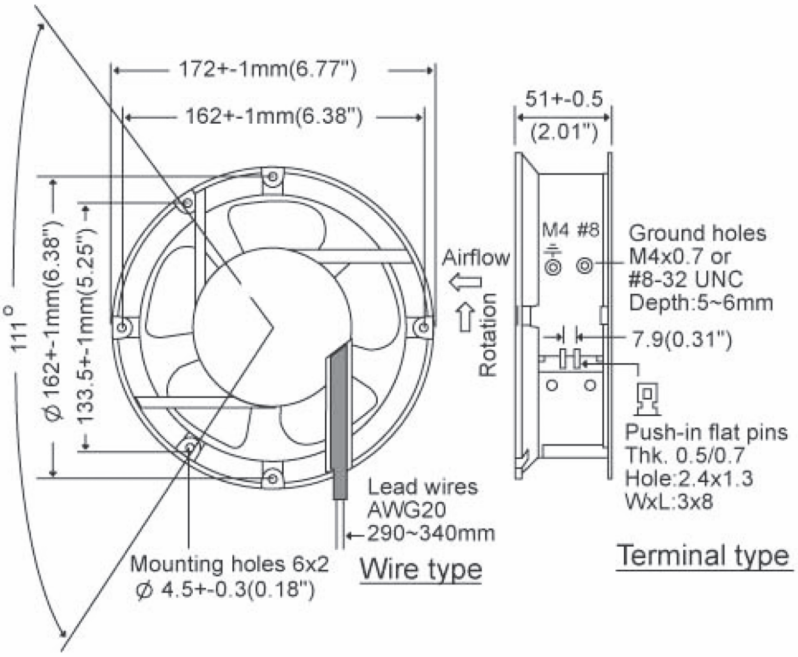

Frame	Diecast Aluminum
Impeller	PBT, UL94V-0 plastic
Connection	2x Lead Wires or Terminals
Motor	Capacitor drive, impedance protected
Bearing System	Dual ball
Insulation Resistance	>100M ohm between lead-wire and frame (500VDC)
Dielectric Strength	1 min at 1500 VAC, 50/60Hz

Operating Temperature
Ball Bearing
-40C ~ +70C
Storage Temp
-40C ~ +80C

Life Expectancy
Ball Bearing
60,000 hours (L10 at 40C)

Weight: ~ 2.7 lbs.

m0

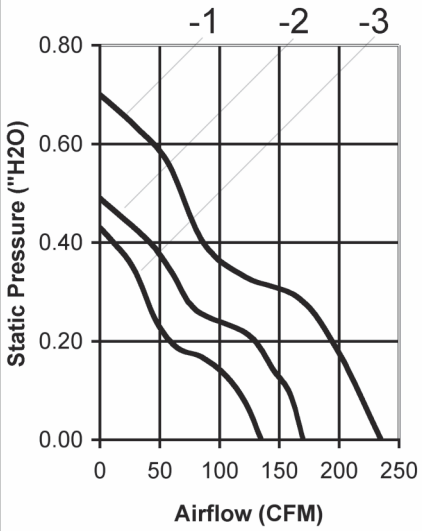

Model Number	Speed (RPM)	Airflow (CFM)	Noise (dB)	Volts AC	Voltage Range	Watts	Max. Static Pressure ("H_2O)
OA172AP-11-1 *	3200	235	52	115	80~130	35	0.70
OA172AP-11-2 *	2400	170	42	115	80~130	20	0.49
OA172AP-11-3 *	1800	135	33	115	80~130	16	0.43
OA172AP-22-1 *	3200	235	52	230	160~260	35	0.70
OA172AP-22-2 *	2400	170	42	230	160~260	20	0.49
OA172AP-22-3 *	1800	135	33	230	160~260	16	0.43

* Indicate "TB" for Terminal type or "WB" for Wire Leads

Knight Electronics, Inc.
10557 Metric Drive
Dallas, Texas 75243
214-340-0265

RoHS Compliant

Orion Fans
Information and data is subject to change without prior notification.

Mouser Electronics

Authorized Distributor

Click to View Pricing, Inventory, Delivery & Lifecycle Information:

Orion Fans:

OA172AN-11-3TB OA172AN-22-1WB OA172AN-11-1WB OA172AN-11-1TB OA172AN-22-1TB OA172AN-11-2TB