OMRON

Insulation Resistance Monitoring Device
K7GE-MG

Reliable, Safe and Accurate Automatic Insulation Resistance Measurements

- Measures insulation resistance automatically when a trigger signal is input
- Identifies the trend in insulation deterioration from the measurement data collected via communications
- Conducts measurements safely with a Megger voltage of 50 VDC
- Able to measure up to eight points simultaneously
- Constantly monitors the voltage applied to the device targeted for measurement, and automatically stops measurement if the target device power is turned ON after measurement has started

NEW

Refer to your OMRON website for the most recent information on applicable safety standards.

Overview

The K7GE-MG is a device that automatically measures the insulation resistance of a load and supports trend monitoring.
Periodic inspections by manpower may cause a unexpected machine stoppage due to a decrease in insulation resistance of equipment before the next inspection. The K7GE-MG provides automatic monitoring of the insulation resistance of each load and allows planned maintenance.

The K7GE-MG measures the insulation resistance by the same detection principle (Megger method) as a Megohmmeter.
To measure the insulation resistance using the K7GE-MG, it is necessary to combine one Main Unit with at least one Probe Unit.

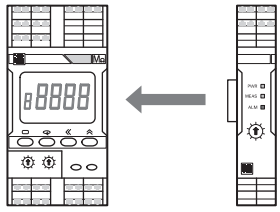

Main Unit (K7GE-MGM) Probe Unit (K7GE-MG1)

The functions of the Main Unit and Probe Unit are shown in the figure on the right.
The Main Unit correspond to a Megohmmeter, and the Probe Unit correspond to a measurement probe with internal contacts. The Main Unit turns ON these contacts in sequence and measure multiple loads individually.
Up to eight Probe Units can be connected to one Main Unit.

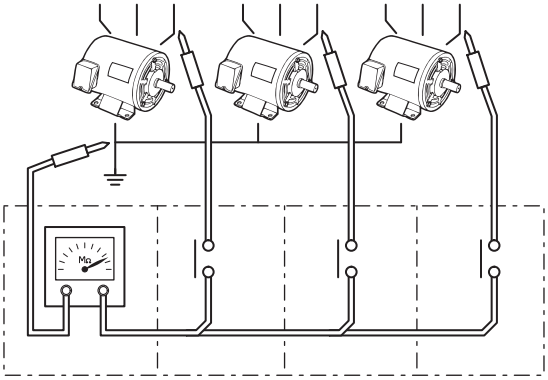

System Configuration

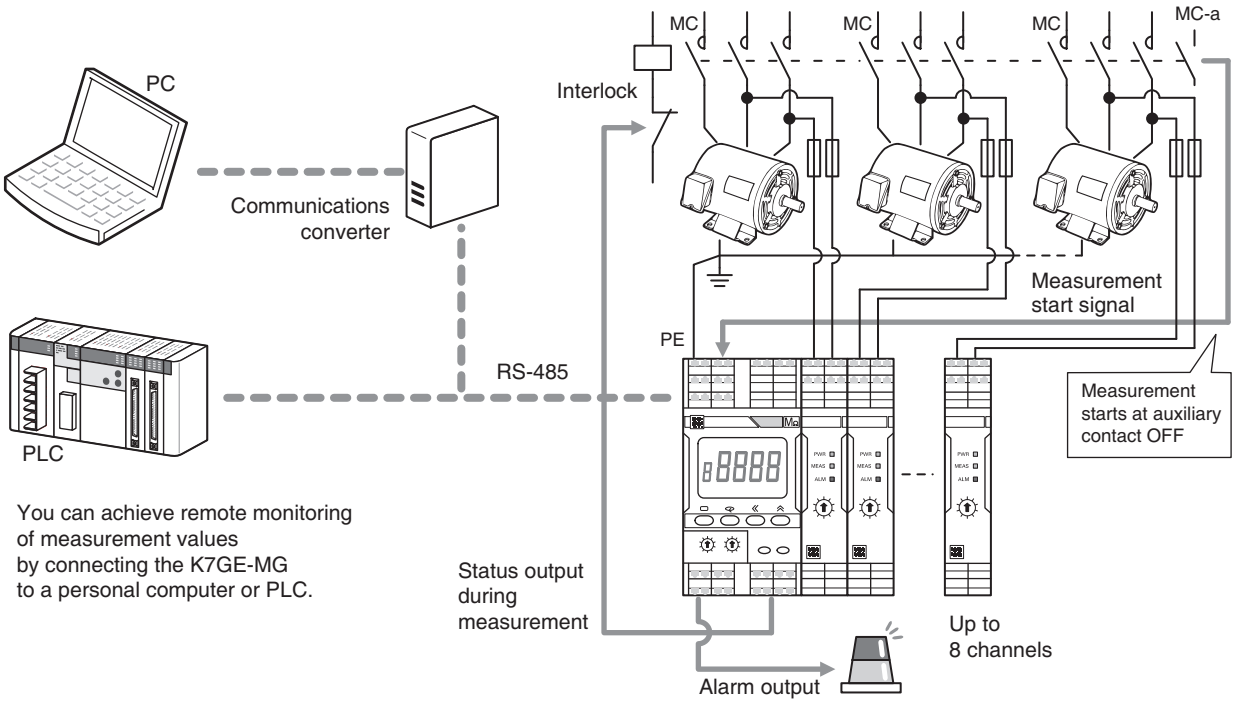

You can achieve remote monitoring of measurement values by connecting the K7GE-MG to a personal computer or PLC.

Ordering Information

Unit	Power supply voltage	Model
Main Unit	100 to 240 VAC	**K7GE-MGMA**
	24 VAC/VDC	**K7GE-MGMD**
Probe Unit	---	**K7GE-MG1**

Accessories (Order Separately)

DIN Tracks	Model
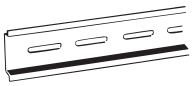	**PFP-100N**
	PFP-50N

End Plate	Model
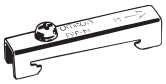	**PFP-M**

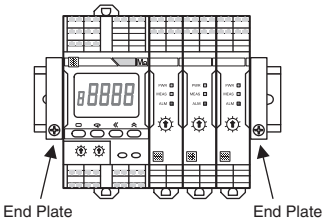

End Plates must be mounted at both ends to prevent contact failure between the Units due to vibration and shock.

Ratings and Specifications

Item		Specifications
Power supply voltage and frequency		K7GE-MGMA: 100 to 240 VAC, 50/60 Hz K7GE-MGMD: 24 VAC, 50/60 Hz, 24 VDC
Operating voltage range		85% to 110% of the rated voltage
Operating frequency range		45 to 65 Hz
Power consumption		Maximum Unit configuration: one Main Unit and eight Probe Units 12.9 VA max. (100 to 240 VAC)/7.8 VA max. (24 VAC)/4.7 W max. (24 VDC) Minimum Unit configuration: one Main Unit and one Probe Unit 8.4 VA max. (100 to 240 VAC)/4.6 VA max. (24 VAC)/2.5 W max. (24 VDC)
Ambient operating temperature		-10 to 55°C (with no condensation or icing)
Ambient operating humidity		25% to 85% (with no condensation)
Storage temperature		-20 to 65°C
Altitude		2,000 m max.
Recommended fuse		T2A, time delay, high-breaking capacity (for Main Unit operating power supply) Tripping current: 7 A max., fast-blow (for Probe Unit voltage input)
Insulation resistance		20 MΩ min. Between all external terminals and the case, between all power supply terminals and all other terminals, between PE terminal, and trigger input terminal, all communications terminals and all transistor output terminals 1,000 MΩ min. Between Probe Unit voltage monitoring terminal and PE terminal
Dielectric strength		2,000 VAC for 1 minute Between all external terminals and the case, between all power supply terminals and all other terminals, between PE terminal, and trigger input terminal, all communications terminals and all transistor output terminals 1,000 VDC for 1 minute Between Probe Unit voltage monitoring terminal and PE terminal
Vibration resistance		Frequency: 10 to 55 Hz, 0.35-mm single amplitude, acceleration 50 m/s^2, 10 sweeps of 5 min each in X, Y, and Z directions
Shock resistance		100 m/s^2, 3 times each in X, Y, and Z axes, 6 directions
Degree of protection		IP20
Terminal block type		Push-In Plus
Exterior color		Black (Munsell N 1.5)
Mounting		DIN Track mounting
Weight		Main Unit: Approx. 156 g Probe Unit: Approx. 63 g
Installation environment		Operation power supply: EN/IEC 61010-1 Over-voltage category II Pollution degree 2 Measurement circuit: EN/IEC 61010-2-030 Pollution degree 2 For details about the measurement category, refer to *Conformance to Safety Standards* on page 14.
Electromagnetic environment		EN/IEC 61326-1 Industrial electromagnetic environment
Safety standards		UL 61010-1, CAN/CSA-C22.2 No.61010-1 Korean Radio Waves Act (KN 61000-6-2 and KN 11) RCM
Wiring material	Wire type	Solid wire or stranded wire
	Wiring material	Copper
	Recommended wire	0.25 to 1.5 mm^2 AWG 24 to AWG 16
	Stripping length Without ferrules	8 mm

Measurement Specifications

Item	Specifications
Measurement range	0.1 to 99.9 MΩ (0.0 MΩ for less than 0.1 MΩ)
Measuring accuracy	±5% rdg. ±1 digit (at ambient temperature -10 to 55°C and ambient humidity 25% to 65%)
Megger voltage	50 VDC
Measurement operation	Perform one measurement operation for each trigger. One-shot trigger.
Average count	Disabled (1 time)/Enabled (8 times)
Measurement target	Single-phase/3-phase AC induction motors An inverter-driven motor requires a contactor on the secondary coil of the inverter. Similarly, a servo motor requires a contactor on the secondary coil of the Servo Drive. A motor with a star delta starter requires a delta connection or a star connection for measurement. Also able to measure DC motors.

Input Specifications of Trigger Input Terminals

Item	Specifications
Input type	No-voltage contact and open collector are possible.
Residual voltage at short circuit	1.5 V max.
Open leakage current	0.1 mA max.
ON current at short circuit	Approx. 7 mA
Minimum detection time	Received as a valid continuous input for at least 50 ms for both ON and OFF.

Output Specifications of Transistor Output Terminals

Item	Specifications
Contact form	NPN open collector
Rated voltage	24 VDC (maximum voltage: 26.4 VDC)
Maximum current	50 mA
Leakage current when power turning OFF	0.1 mA max.
Residual voltage	1.5 V max.

Input Specifications of Voltage Input Terminals

Item	Specifications
System voltage (All are specified as line voltage)	AC waveform: <Single-phase, 2-wire, N-phase ground> Sine waveform: 100 to 600 VAC, -15% to 10%, 50/60±5 Hz Thyristor waveform: 100 to 600 VAC, -15% to 10%, 50/60±5 Hz (0° to 150° dia.) Inverter waveform: 100 to 600 VAC, -15% to 10%, 20 to 85 Hz <3-phase, 3-wire, S-phase ground> Sine waveform: 100 to 480 VAC, -15% to 10%, 50/60±5 Hz Thyristor waveform: 100 to 480 VAC, -15% to 10%, 50/60±5 Hz (0° to 150° dia.) Inverter waveform: 100 to 480 VAC, -15% to 10%, 20 to 85 Hz <3-phase, 4-wire, N-phase ground> Sine waveform: 100 to 600 VAC, -15% to 10%, 50/60±5 Hz Thyristor waveform: 100 to 600 VAC, -15% to 10%, 50/60±5 Hz (0° to 150° dia.) Inverter waveform: 100 to 600 VAC, -15% to 10%, 20 to 85 Hz DC waveform: 24 to 480 VDC, -15% to 10%

Communications Specifications

Item	Specifications
Physical layer	RS-485
Transmission path connection method	RS-485: Multidrop
Communications method	RS-485 (2-wire, half duplex)
Synchronization method	Asynchronous
Connection configurations	Master and Slave configurations are 1:1 or 1:N connections.
Maximum number of Units	32 (including one host system)
Cable length	Total 500 m max. (twisted-pair cable)
Baud rate	9.6, 19.2, 38.4 or 57.6 kbps
Data length	7/8 bits
Stop bits	1/2 bits
Error detection	Vertical parity (none/even/odd) BCC (with CompoWay/F selected), CRC-16 (with Modbus RTU selected)
Flow control	None
Retry function	None
Buffer	97 bytes
Send wait time	0 to 99 ms
Protocol	CompoWay/F and Modbus RTU

Nomenclature

Front Section

Main Unit K7GE-MGM

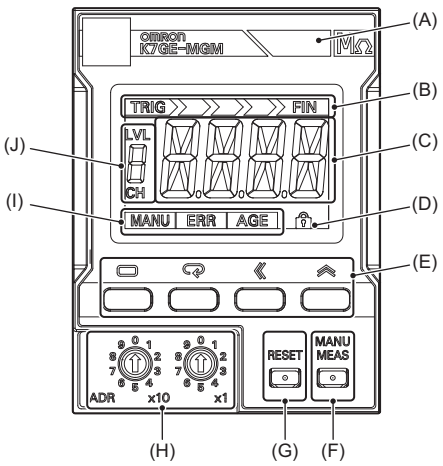

Probe Unit K7GE-MG1

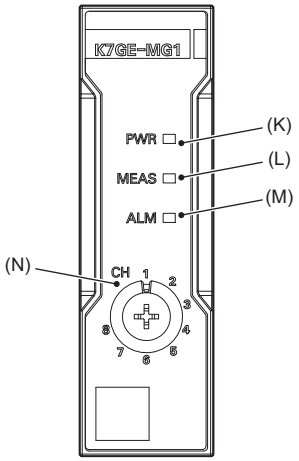

Symbol	Name	Operation
(A)	Alarm output indicator	Displays the alarm judgment results of automatic measurement in three colors. Green: Normal, Yellow: Warning (Alarm 1 occurrence), Red: Critical (Alarm 2 occurrence) If the status is different across multiple channels, the display color is decided in the priority order of red (critical) > yellow (warning) > green (normal).
(B)	Measurement step indicator	The automatic measurement operation consists of several steps. This indicator shows the progress of the step from the start to the end of the measurement.
(C)	Main display	The following contents are displayed in the operating status of the Main Unit. Measuring operation: The remaining seconds until the measurement completes are counted down After measurement completed: The insulation resistance measurement value, or characters indicating measurement failure Setting level: The setting parameter name, or setting value Error occurs: The characters indicating the error status
(D)	Protect indicator	Indicates that the protect function of the setting parameter is set.
(E)	Operation keys	Level Key (▭): Selects the setting level. Mode Key (↻): Selects the setting parameter of the Initial Setting Level and Communications Setting Level. Displays the measurement value of each channel at the Operation Level. Also used to select between enabling/disabling of measurement value display automatic scroll. Shift Key (≪): Sets the parameter value to a changeable state. Used for digit shift in the changeable state. Up Key (⌃): Increments the value when the parameter is in a changeable state.
(F)	Manual Measurement Key	Selects to start or end manual measurement. Manual measurement is used to check the operation when the system is started up. Automatic measurement requires a trigger signal to start measurement, but manual measurement does not require a trigger signal. You can use manual measurement in the same way as a Megohmmeter.
(G)	Reset Key	Selects to return to the power reset status. Even if the measuring operation is in progress, priority is given to the Reset Key, and measurement stops to return to the power reset status. The Reset Key is enabled only in the Operation Level.
(H)	Unit Number Setting Switch	Sets the unit number during communications.
(I)	Status display	MANU: Indicates the manual measurement state. ERR: Indicates that a system error occurred. AGE: Indicates that it is time to replace the Main Unit (guideline).
(J)	LVL/CH display	Displays the level, or the value of the channel number. LVL: Indicates that the value displayed in the LVL/CH display is the "Level". CH: Indicates that the value displayed in the LVL/CH display is the "Channel".
(K)	PWR indicator (green)	Indicates that the Probe Unit power is ON.
(L)	MEAS indicator (green)	Indicates that measurement is in progress for the load connected to the Probe Unit.
(M)	ALM indicator (red)	Indicates that an alarm occurred in the load connected to the Probe Unit.
(N)	Channel Number Setting Switch	Sets a unique channel number for each Unit when multiple Probe Units are added.

Terminal Section

Main Unit K7GE-MGM

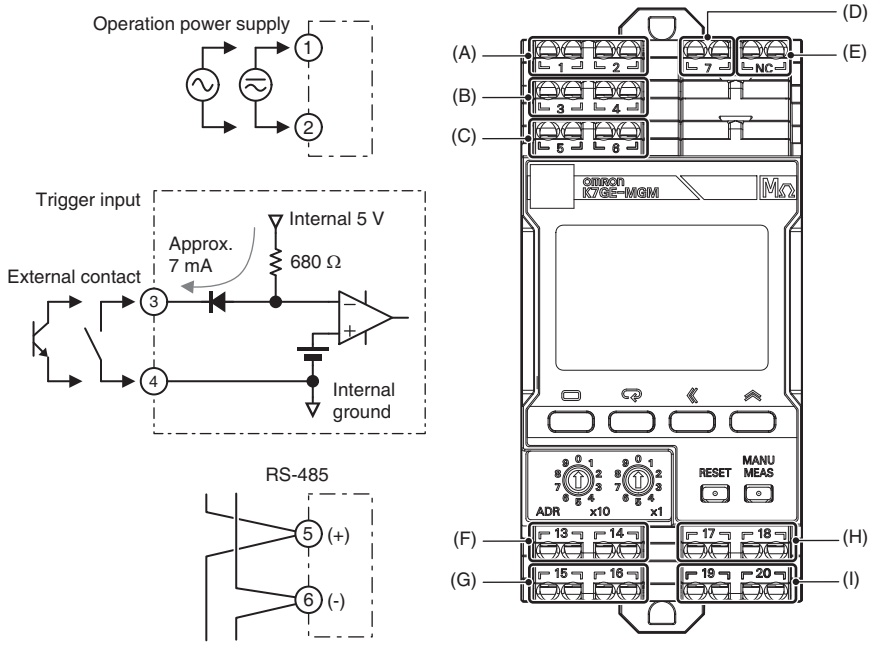

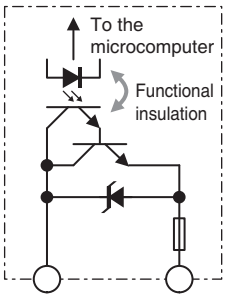

13	14	ALM 1 output
15	16	ALM 2 output
17	18	Status output during measurement
19	20	Self-diagnosis error output

Symbol	Terminal Number	Name	Operation
(A)	1 and 2	Operation power supply	Connect the operation power supply to the Main Unit.
(B)	3 and 4	Trigger input	Input terminals of the external contact from where a trigger signal is applied. No. 3: Collector of the NPN transistor, No. 4: Emitter of the NPN transistor
(C)	5 and 6	RS-485	Connect the RS-485 communications line. No. 5: +, No. 6: -
(D)	7	PE	A protective earthing terminal.
(E)	NC	NC	Do not connect anything to this terminal.
(F)	13 and 14	ALM 1 output	Compares the measurement value and alarm value 1, and outputs an alarm. No. 13: Collector of the NPN transistor, No. 14: Emitter of the NPN transistor
(G)	15 and 16	ALM 2 output	Compares the measurement value and alarm value 2, and outputs an alarm. No. 15: Collector of the NPN transistor, No. 16: Emitter of the NPN transistor
(H)	17 and 18	Status output during measurement	Provides notification that measurement is in progress. The output is normally open (OFF). You can use this output to design an interlock circuit to prevent accidental restart of the load during measurement operation. No. 17: Collector of the NPN transistor, No. 18: Emitter of the NPN transistor
(I)	19 and 20	Self-diagnosis error output	Provides notification about system error in the Main Unit. The output is normally closed (ON). No. 19: Collector of the NPN transistor, No. 20: Emitter of the NPN transistor

Terminal Section

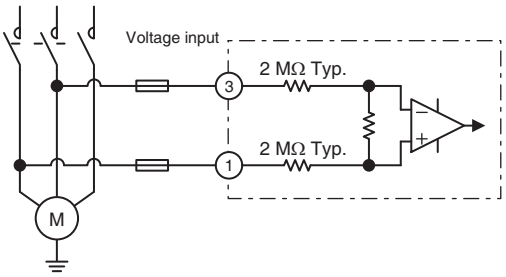

Probe Unit K7GE-MG1

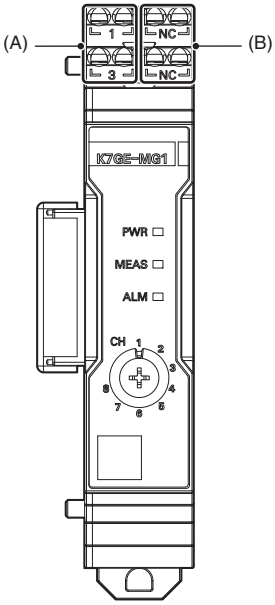

Symbol	Terminal Number	Name	Operation
(A)	1 and 3	Voltage input	Connect the load terminals. No. 1: Connect the R-phase in a 3-phase system, and the L-phase in a single-phase system No. 3: Connect the S-phase in a 3-phase system, and the N-phase in a single-phase system Use the No. 1 terminal to discharge the electric charge and apply the Megger voltage.
(B)	NC	NC	Do not connect anything to this terminal.

Connection Diagram

When the Load Is a Single-Phase/3-Phase Induction Motor (Direct Connection to Commercial Power Supply)

Install a contactor between the power line and the motor.

> Do not connect any other device such as a transformer or a filter between the contactor and the motor. Doing so may cause incorrect measurement.

Connect the voltage input of the Probe Unit of the K7GE-MG to the secondary output terminal (motor side) of the contactor.

> Make sure that it is not connected to the primary side (power supply side). It cannot be measured correctly and may cause a hazardous condition.

The figure shows a simplified view of the wiring for status output during measurement, and ALM 1 and ALM 2 outputs. Use an appropriate relay for relaying in consideration of the switching capacity of the output transistor. The specifications of the output transistor for the K7GE-MG are 24 VDC (+10%), 50 mA max.

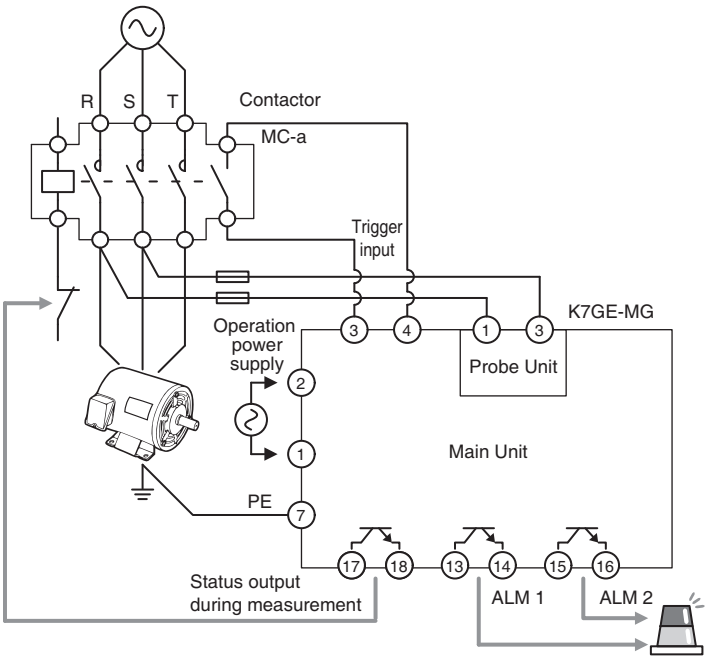

When the Load Is an Inverter-Driven Motor

Install a contactor between the inverter output and the motor. If a noise filter is to be inserted at the output side of the inverter, insert it between the inverter output and the primary output terminal of the contactor.

> Do not connect any other device such as a transformer or a filter between the contactor and the motor. Doing so may cause incorrect measurement.

Connect the voltage input of the Probe Unit of the K7GE-MG to the secondary output terminal (motor side) of the contactor.

> Make sure that it is not connected to the primary side (power supply side). It cannot be measured correctly and may cause a hazardous condition.

The figure shows a simplified view of the wiring for status output during measurement, and ALM 1 and ALM 2 outputs. Use an appropriate relay for relaying in consideration of the switching capacity of the output transistor. The specifications of the output transistor for the K7GE-MG are 24 VDC (+10%), 50 mA max.

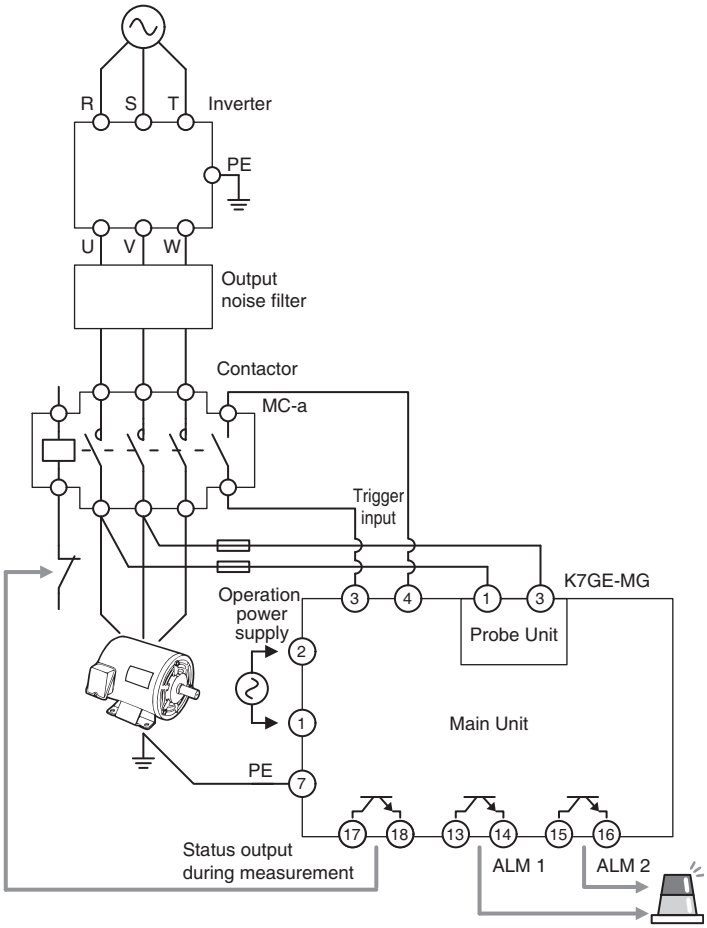

When the Load Is a Servo Motor

Install a contactor between the Servo Drive output and the motor.

The contactor is required only in the power line. Relays the motor power cables other than the power line to the terminal blocks and connect it to the Servo Drive directly.

Do not connect any other device such as a transformer or a filter between the contactor and the motor. Doing so may cause incorrect measurement.

Connect the voltage input of the Probe Unit of the K7GE-MG to the secondary output terminal (motor side) of the contactor.

Make sure that it is not connected to the primary side (power supply side). It cannot be measured correctly and may cause a hazardous condition.

Turn the contactor ON and OFF when the Servo Drive power is OFF.

If the contactor is turned OFF while the Servo Drive is turned ON, the rotating shaft of the motor will be in a free. If the contactor is turned on after that, the motor may perform unintended operation and can be dangerous.

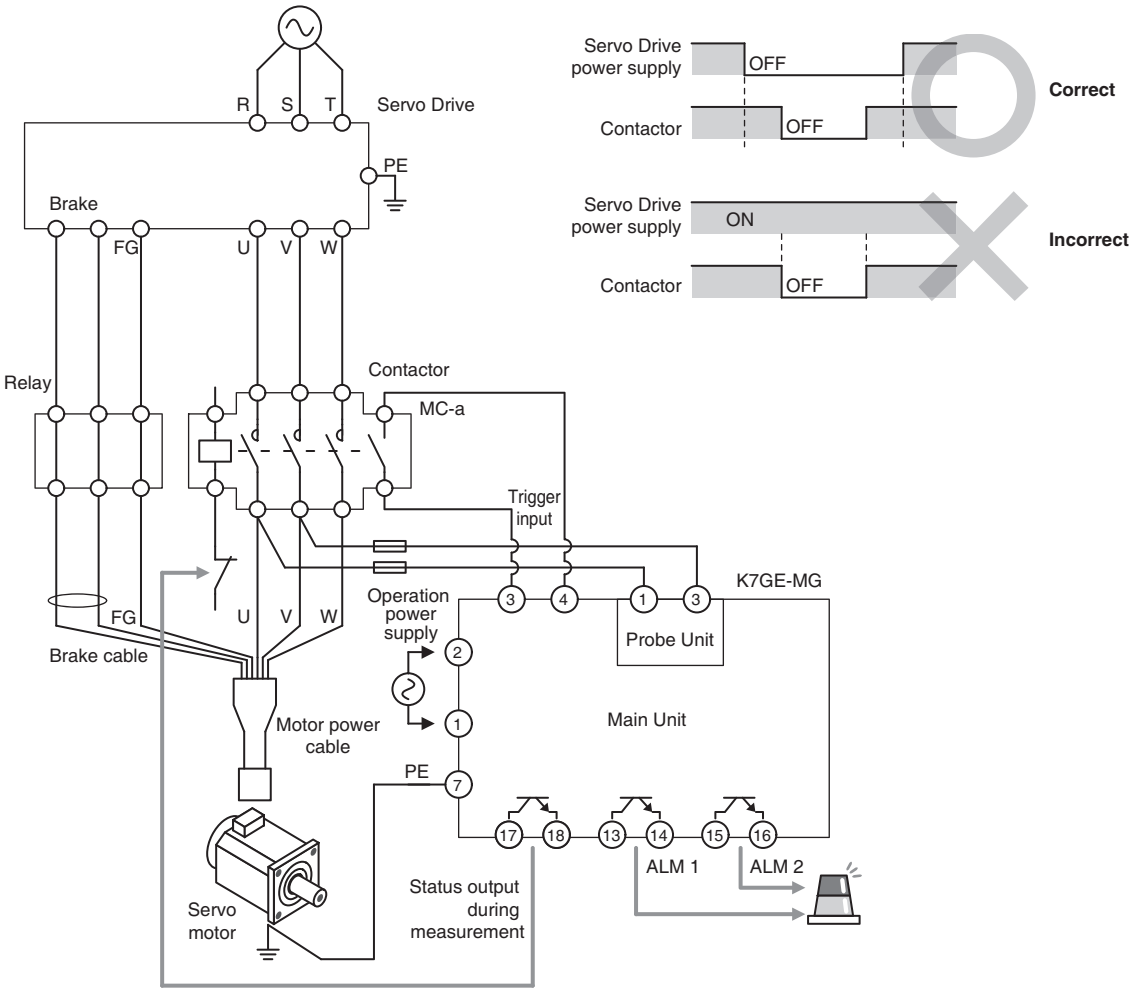

The figure shows a simplified view of the wiring for status output during measurement, and ALM 1 and ALM 2 outputs.
Use an appropriate relay for relaying in consideration of the switching capacity of the output transistor.
The specifications of the output transistor for the K7GE-MG are 24 VDC (+10%), 50 mA max.

Dimensions

(Unit: mm)

Main Unit

K7GE-MGM

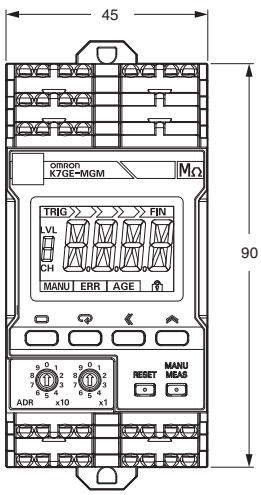

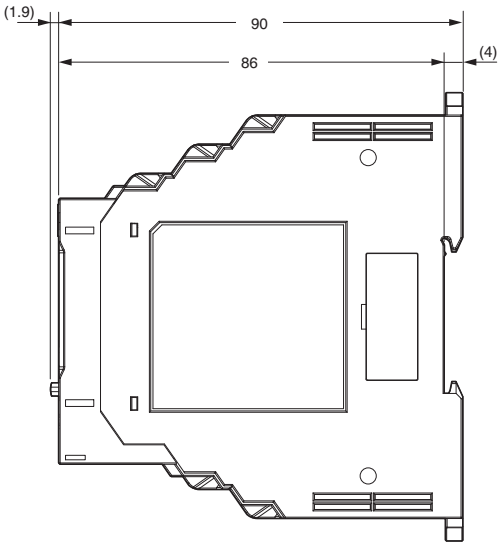

Probe Unit

K7GE-MG1

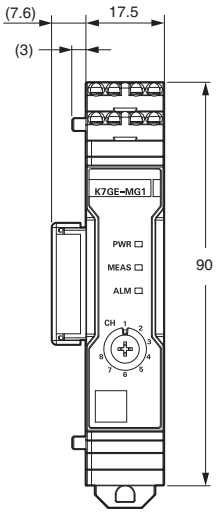

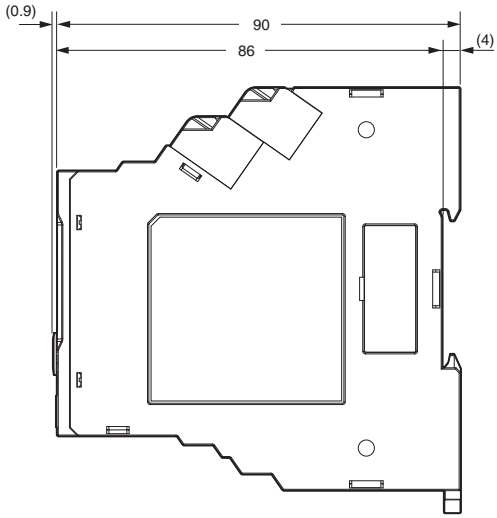

Optional Products for DIN Track Mounting

DIN Tracks

PFP-100N
PFP-50N

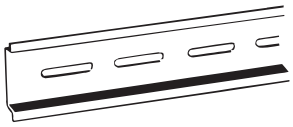

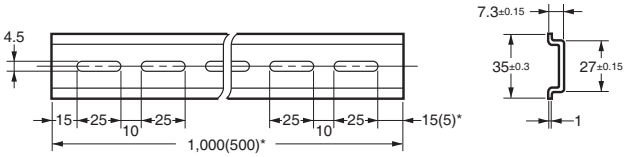

* Dimensions in parentheses are for the PFP-50N.

End Plate

PFP-M

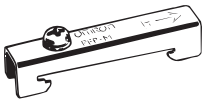

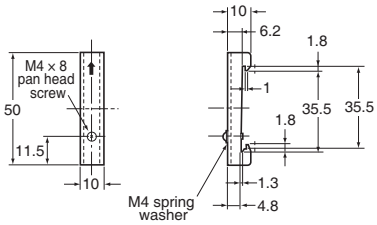

Setting Parameter Flow

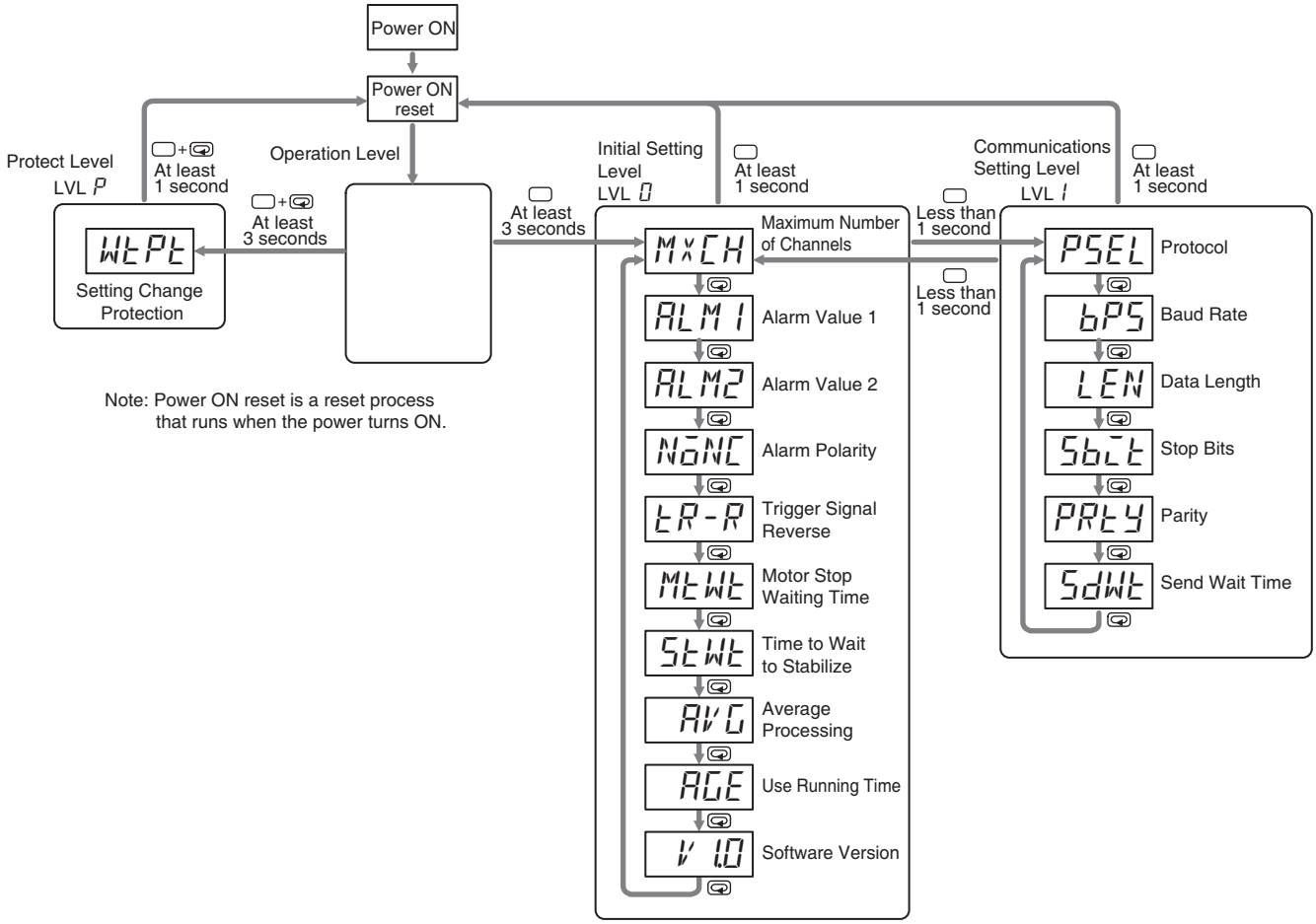

Level	Parameter name	Characters	Setting range	Description
Protect	Setting Change Protection	WtPt	**OFF**/ON	Use key operations to change the setting value, **Enabled**/Disabled
Initial Setting	Maximum Number of Channels	MxCH	**1** to 8	Total number of channels, default value: **1**
	Alarm Value 1	ALM1	0.0 to 99.9 MΩ	Alarm threshold value (warning), default value: **20.0**
	Alarm Value 2	ALM2	0.0 to 99.9 MΩ	Alarm threshold value (critical), default value: **1.0**
	Alarm Polarity	NoNC	n-o/**n-c**	Alarm output polarity, Normally open/**Normally close**
	Trigger Signal Reverse	tR-R	**OFF**/ON	**Start measurement when trigger contact input is OFF**/ Start measurement when trigger contact input is ON
	Motor Stop Waiting Time	MtWt	0 to 299 s	Time from trigger input to load stopping, default value: **10**
	Time to Wait to Stabilize	StWt	0 to 99 s	Time for the measurement value to stabilize after the Megger voltage is applied, default value: **60**
	Average Processing	AvG	**OFF**/ON	Average processing of measurement values, **None**/Yes
	Use Running Time	AGE	**OFF**/ON	Running time estimation function, **Not used**/Used
	Software Version	V 1.0	-	Displays the software version of the K7GE-MG. ✻ The version number depends on the current software version.
Communications Setting	Protocol	PSEL	**CWF**/MOD	Protocol selection, **CompoWay/F** / Modbus RTU
	Baud Rate	bPS	**9.6**/19.2/38.4/57.6 kbps	Baud rate, default value: **9.6**
	Data Length	LEN	**7**/8 bits	Data length, default value: **7**
	Stop Bits	StbT	1/**2** bits	Stop bits, default value: **2**
	Parity	PRtY	NONE/**EVEN**/ODD	Parity, default value: **EVEN**
	Send Wait Time	SdWt	0 to 99 ms	Response wait time from the host, default value: **20**

Note: Bold text values indicate default settings.

K7GE-MG Logging Tool

The K7GE-MG Logging Tool (this tool) makes it easy to perform remote monitoring.

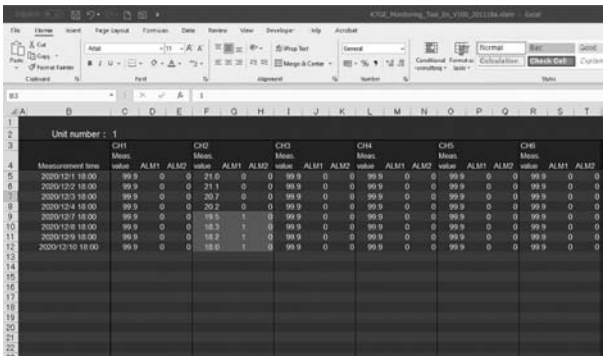

The main specifications of the tool are as follows:

- Data for up to five sets of the monitoring device can be logged.
- A maximum of eight Probe Units can be included in one set.
- The measurement values and alarm status data for each set can be logged. Up to 1,000 values of data can be logged.
- The setting parameters can be read and written.

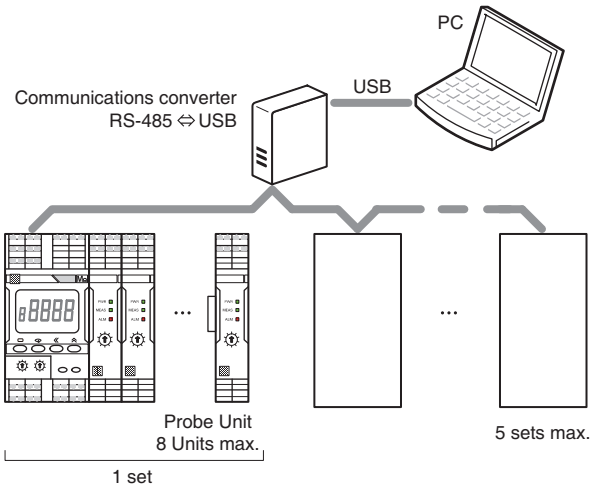

The system requirements are as follows.

Supported OS	Windows 10 64-bit edition, English or Japanese
PC specifications	1 GHz or faster CPU, 1 GB or more of RAM, and 16 GB or more of reserved disk area
Excel	Excel 2019 32-bit or 64-bit edition, English or Japanese ✻ For Excel 2013/2016 32-bit edition, OMRON performed a connection test only on the Japanese version in combination with the Japanese version of Windows 10.
RS485-USB communications converter	Use a commercially available product. ✻ OMRON performed an evaluation test on the SI-35USB-2 manufactured by LINE EYE. (The driver version is V2.12.18.)

Refer to Help in this tool for details on using this tool.

You can download the latest version of this tool from the following OMRON website.
https://www.ia.omron.com/k7ge_tool

In the interest of product improvement, the K7GE-MG Logging Tool specifications are subject to change without notice.

Conformance to Safety Standards

- For wiring from the Probe Unit to the load, use a Class CC, Class J, or Class T fuse with a rated current of 7 A or less.
- The protection provided by the device may be impaired if the device is used in a manner that is not specified by the manufacturer.
- To use the Product, install it as an embedded device within a control panel.
- The table below shows the nominal voltage and measurement circuit connections available for each measurement category in the Main Power Supply System Configurations. Do not use the device under conditions that exceed this category and conditions.

	Main Power Supply System Configurations				
	3-phase, 4-wire type (neutral point grounding) TT 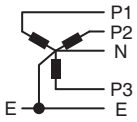 TN-C-S 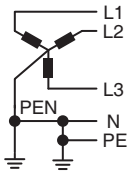	3-phase, 3-wire type (no grounding) 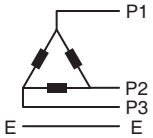	3-phase, 3-wire type (single-phase grounding) 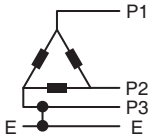	Single-phase, 2-wire type AC or DC 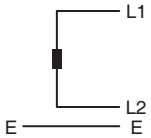	Single-phase (split phase), 2-wire type AC or DC 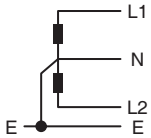
CAT III	Phase voltage/line voltage 277 V/480 V	Line voltage 300 V	Line voltage 300 V	Line voltage 240 V	Phase voltage/ line voltage 240 V/480 V
CAT II	347 V/600 V in addition to the above	480 V in addition to the above	480 V in addition to the above	480 V in addition to the above	Same as above

Connection to measurement circuit	TT: Connect E in the diagram above to the No. 7 terminal (PE) of the K7GE-MGM. Connect P1 and P2 to the No. 1 and No. 3 terminals of the K7GE-MG1. TN-C-S: Connect PE in the diagram above to the No. 7 terminal (PE) of the K7GE-MGM. Connect L1 and L2 to the No. 1 and No. 3 terminals of the K7GE-MG1.	Connect E in the diagram above to the No. 7 terminal (PE) of the K7GE-MGM. Connect P1 and P2 to the No. 1 and No. 3 terminals of the K7GE-MG1.	Connect E in the diagram above to the No. 7 terminal (PE) of the K7GE-MGM. Connect L1 and L2 to the No. 1 and No. 3 terminals of the K7GE-MG1.

Measurement Category

The measurement category classifies the places and equipment entry wire which you can connect to the measurement terminals, as prescribed in EN/IEC 61010-2-030.
Each category is as follows.

CAT I:	Equipment to connect to circuits where measures are taken to limit transient overvoltages to low levels
CAT II:	Energy-consuming equipment with an energy supply from fixed wiring equipment (such as a power outlet)
CAT III:	Equipment in fixed wiring equipment that particularly demands equipment reliability and effectiveness
CAT IV:	Equipment to use at the electrical service entry

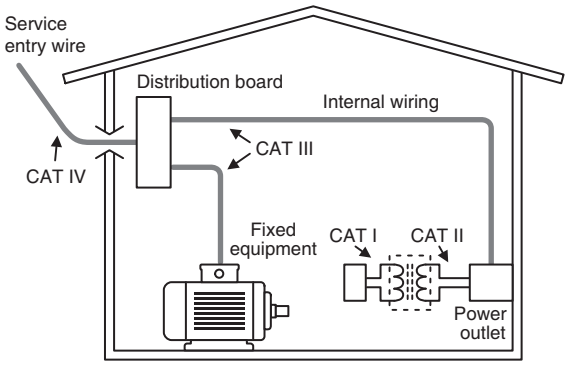

Microsoft, Windows is either registered trademarks or trademarks of Microsoft Corporation in the United States and other countries.
Megger is a registered trademark or trademark of Megger Group Limited.
Modbus is a registered trademark or trademark of Schneider Electric USA, Inc. in Japan, the United States or other countries.
Other company names and product names in this document are the trademarks or registered trademarks of their respective companies.

OMRON AUTOMATION AMERICAS HEADQUARTERS • Chicago, IL USA • 847.843.7900 • 800.556.6766 • automation.omron.com

OMRON CANADA, INC. • HEAD OFFICE
Toronto, ON, Canada • 416.286.6465 • 866.986.6766 • automation.omron.com

OMRON ELECTRONICS DE MEXICO • HEAD OFFICE
Ciudad de México • 52.55.5901.4300 • 01.800.386.6766 • mela@omron.com

OMRON ELECTRONICS DE MEXICO • SALES OFFICE
San Pedro Garza García, N.L. • 81.12.53.7392 • 01.800.386.6766 • mela@omron.com

OMRON ELECTRONICS DE MEXICO • SALES OFFICE
Eugenio Garza Sada,León, Gto • 01.800.386.6766 • mela@omron.com

OMRON ELETRÔNICA DO BRASIL LTDA • HEAD OFFICE
São Paulo, SP, Brasil • 55 11 5171-8920 • automation.omron.com

OMRON ARGENTINA • SALES OFFICE
Buenos Aires, Argentina • +54.11.4521.8630 • +54.11.4523.8483
mela@omron.com

OTHER OMRON LATIN AMERICA SALES
+54.11.4521.8630 • +54.11.4523.8483 • mela@omron.com

Authorized Distributor:

Controllers & I/O
• Machine Automation Controllers (MAC) • Motion Controllers
• Programmable Logic Controllers (PLC) • Temperature Controllers • Remote I/O

Robotics
• Industrial Robots • Mobile Robots

Operator Interfaces
• Human Machine Interface (HMI)

Motion & Drives
• Machine Automation Controllers (MAC) • Motion Controllers • Servo Systems
• Frequency Inverters

Vision, Measurement & Identification
• Vision Sensors & Systems • Measurement Sensors • Auto Identification Systems

Sensing
• Photoelectric Sensors • Fiber-Optic Sensors • Proximity Sensors
• Rotary Encoders • Ultrasonic Sensors

Safety
• Safety Light Curtains • Safety Laser Scanners • Programmable Safety Systems
• Safety Mats and Edges • Safety Door Switches • Emergency Stop Devices
• Safety Switches & Operator Controls • Safety Monitoring/Force-guided Relays

Control Components
• Power Supplies • Timers • Counters • Programmable Relays
• Digital Panel Meters • Monitoring Products

Switches & Relays
• Limit Switches • Pushbutton Switches • Electromechanical Relays
• Solid State Relays

Software
• Programming & Configuration • Runtime

N225I-E3-02 Note: Specifications are subject to change. © 2021 Omron. All Rights Reserved. Printed in U.S.A.

Printed on recycled paper.

Mouser Electronics

Authorized Distributor

Click to View Pricing, Inventory, Delivery & Lifecycle Information:

Omron:

K7GE-MG1 K7GE-MGMA K7GE-MGMD