DATA SHEET

80C31/80C32

80C51 8-bit microcontroller family

128/256 byte RAM ROMless low voltage (2.7 V–5.5 V), low power, high speed (33 MHz)

Product specification
IC28 Data Handbook

2000 Aug 07

Philips
Semiconductors

PHILIPS

DESCRIPTION

The Philips 80C31/32 is a high-performance static 80C51 design fabricated with Philips high-density CMOS technology with operation from 2.7 V to 5.5 V.

The 80C31/32 ROMless devices contain a 128 × 8 RAM/256 × 8 RAM, 32 I/O lines, three 16-bit counter/timers, a six-source, four-priority level nested interrupt structure, a serial I/O port for either multi-processor communications, I/O expansion or full duplex UART, and on-chip oscillator and clock circuits.

In addition, the device is a low power static design which offers a wide range of operating frequencies down to zero. Two software selectable modes of power reduction—idle mode and power-down mode are available. The idle mode freezes the CPU while allowing the RAM, timers, serial port, and interrupt system to continue functioning. The power-down mode saves the RAM contents but freezes the oscillator, causing all other chip functions to be inoperative. Since the design is static, the clock can be stopped without loss of user data and then the execution resumed from the point the clock was stopped.

SELECTION TABLE

For applications requiring more ROM and RAM, see the 8XC54/58 and 8XC51RA+/RB+/RC+/80C51RA+ data sheet.

ROM/EPROM Memory Size (X by 8)	RAM Size (X by 8)	Programmable Timer Counter (PCA)	Hardware Watch Dog Timer
80C31/8XC51			
0K/4K	128	No	No
80C32/8XC52/54/58			
0K/8K/16K/32K	256	No	No
80C51RA+/8XC51RA+/RB+/RC+			
0K/8K/16K/32K	512	Yes	Yes
8XC51RD+			
64K	1024	Yes	Yes

FEATURES

- 8051 Central Processing Unit
  - 128 × 8 RAM (80C31)
  - 256 × 8 RAM (80C32)
  - Three 16-bit counter/timers
  - Boolean processor
  - Full static operation
  - Low voltage (2.7 V to 5.5 V@ 16 MHz) operation
- Memory addressing capability
  - 64k ROM and 64k RAM
- Power control modes:
  - Clock can be stopped and resumed
  - Idle mode
  - Power-down mode
- CMOS and TTL compatible
- TWO speed ranges at V_{CC} = 5 V
  - 0 to 16 MHz
  - 0 to 33 MHz
- Three package styles
- Extended temperature ranges
- Dual Data Pointers
- 4 level priority interrupt
- 6 interrupt sources
- Four 8-bit I/O ports
- Full–duplex enhanced UART
  - Framing error detection
  - Automatic address recognition
- Programmable clock out
- Asynchronous port reset
- Low EMI (inhibit ALE)
- Wake-up from Power Down by an external interrupt

80C51/87C51 AND 80C31 ORDERING INFORMATION

ROMless	TEMPERATURE RANGE °C AND PACKAGE	VOLTAGE RANGE	FREQ. (MHz)	DRAWING NUMBER
P80C31SBPN	0 to +70, Plastic Dual In-line Package	2.7 V to 5.5 V	0 to 16	SOT129-1
P80C31SBAA	0 to +70, Plastic Leaded Chip Carrier	2.7 V to 5.5 V	0 to 16	SOT187-2
P80C31SBBB	0 to +70, Plastic Quad Flat Pack	2.7 V to 5.5 V	0 to 16	SOT307-2
P80C31SFPN	–40 to +85, Plastic Dual In-line Package	2.7 V to 5.5 V	0 to 16	SOT129-1
P80C31SFAA	–40 to +85, Plastic Leaded Chip Carrier	2.7 V to 5.5 V	0 to 16	SOT187-2
P80C31SFBB	–40 to +85, Plastic Quad Flat Pack	2.7 V to 5.5 V	0 to 16	SOT307-2

PART NUMBER DERIVATION

DEVICE NUMBER	OPERATING FREQUENCY, MAX (S)	TEMPERATURE RANGE (B)	PACKAGE (AA)
P80C31	S = 16 MHz	B = 0° to +70°C	AA = PLCC
P80C32	U = 33 MHz	F = –40°C to +85°C	BB = PQFP
			PN = PDIP

80C32 ORDERING INFORMATION

ROMless	TEMPERATURE RANGE °C AND PACKAGE	FREQ MHz	DRAWING NUMBER
P80C32SBP N	0 to +70, Plastic Dual In-line Package	16	SOT129-1
P80C32SBA A	0 to +70, Plastic Leaded Chip Carrier	16	SOT187-2
P80C32SBB B	0 to +70, Plastic Quad Flat Pack	16	SOT307-2
P80C32SFP N	–40 to +85, Plastic Dual In-line Package	16	SOT129-1
P80C32SFA A	–40 to +85, Plastic Leaded Chip Carrier	16	SOT187-2
P80C32SFB B	–40 to +85, Plastic Quad Flat Pack	16	SOT307-2
P80C32UBA A	0 to +70, Plastic Leaded Chip Carrier	33	SOT187-2
P80C32UBP N	0 to +70, Plastic Dual In-line Package	33	SOT129-1
P80C32UBB B	0 to +70, Plastic Quad Flat Pack	33	SOT307-2
P80C32UFA A	–40 to +85, Plastic Leaded Chip Carrier	33	SOT187-2
P80C32UFP N	–40 to +85, Plastic Dual In-line Package	33	SOT129-1
P80C32UFB B	–40 to +85, Plastic Quad Flat Pack	33	SOT307-2

BLOCK DIAGRAM

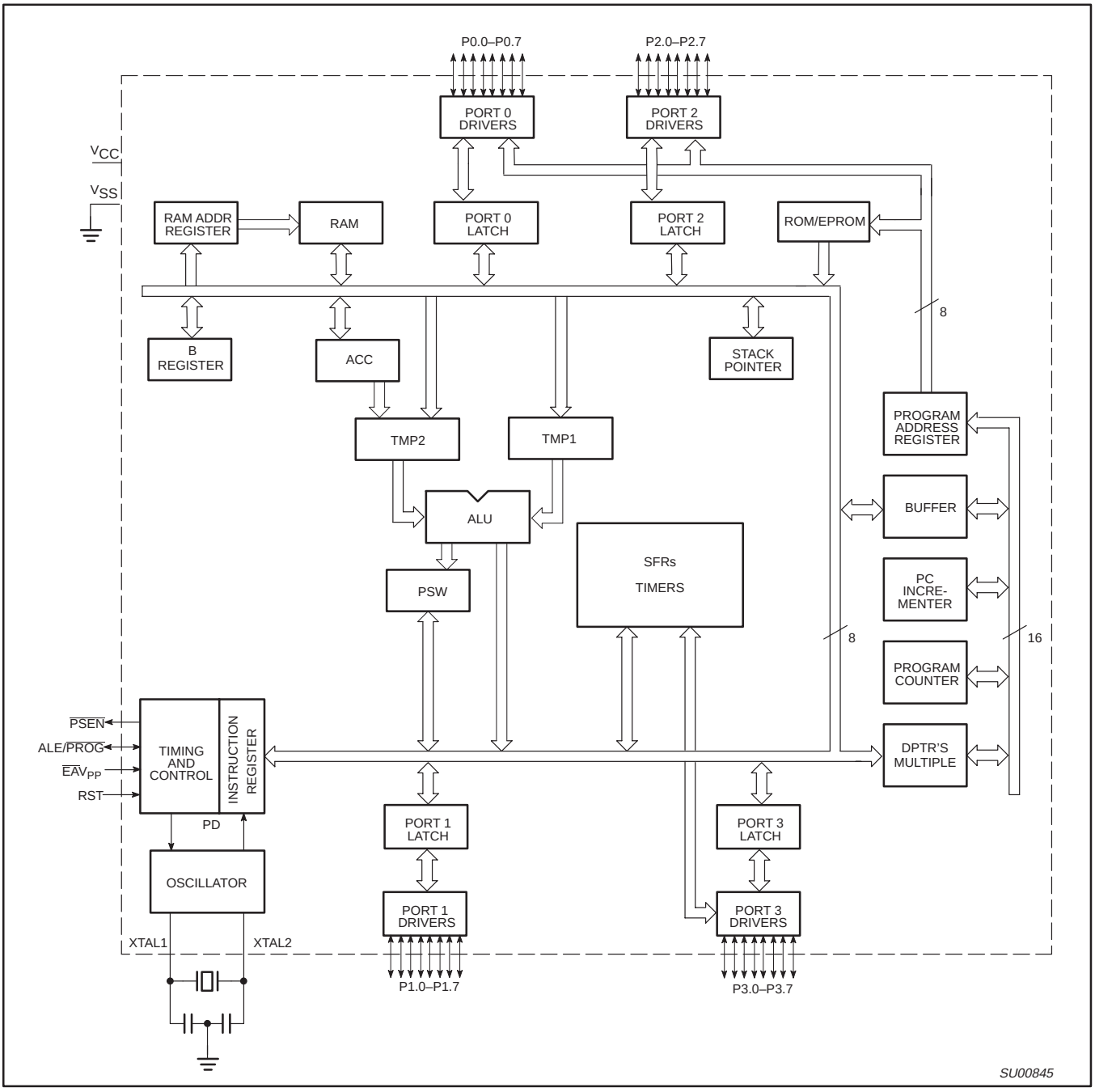

LOGIC SYMBOL

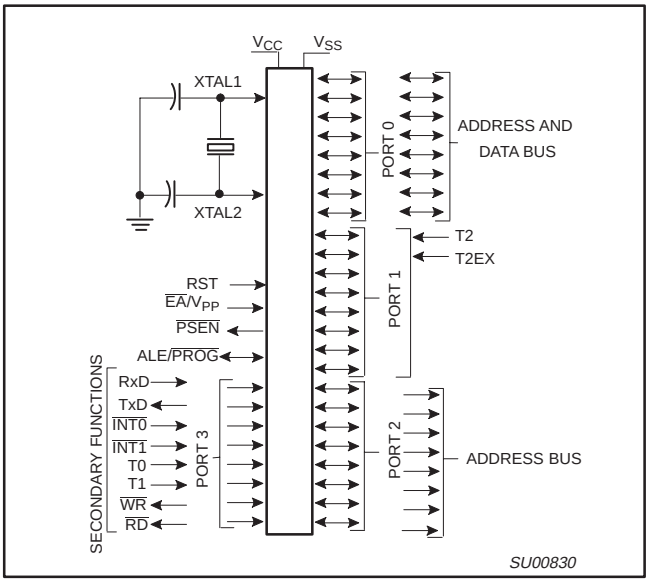

PIN CONFIGURATIONS

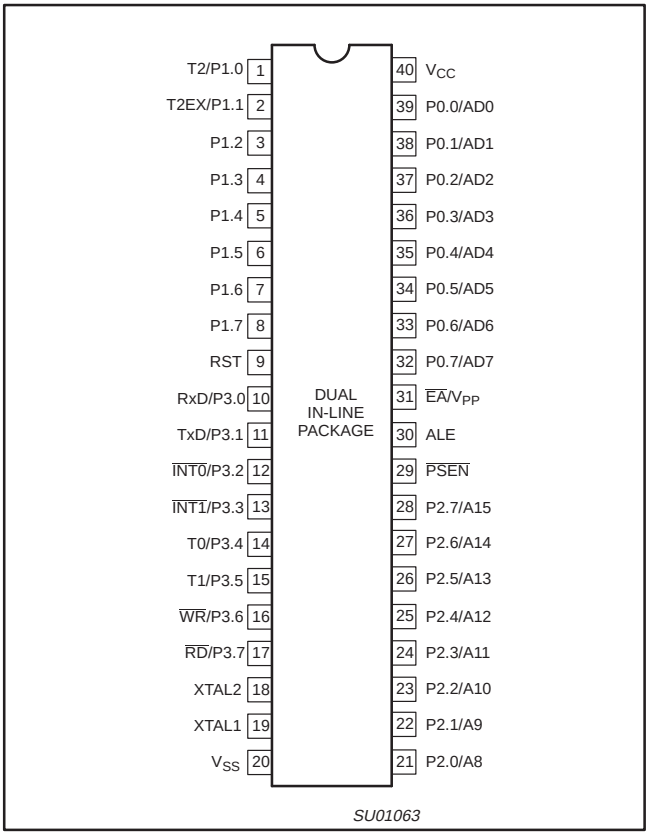

PLASTIC LEADED CHIP CARRIER PIN FUNCTIONS

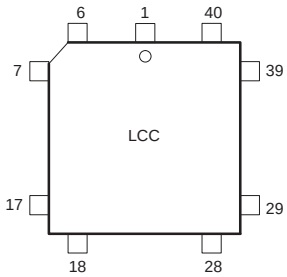

Pin	Function	Pin	Function	Pin	Function
1	NIC*	16	P3.4/T0	31	P2.7/A15
2	P1.0/T2	17	P3.5/T1	32	PSEN
3	P1.1/T2EX	18	P3.6/WR	33	ALE
4	P1.2	19	P3.7/RD	34	NIC*
5	P1.3	20	XTAL2	35	EA/VPP
6	P1.4	21	XTAL1	36	P0.7/AD7
7	P1.5	22	VSS	37	P0.6/AD6
8	P1.6	23	NIC*	38	P0.5/AD5
9	P1.7	24	P2.0/A8	39	P0.4/AD4
10	RST	25	P2.1/A9	40	P0.3/AD3
11	P3.0/RxD	26	P2.2/A10	41	P0.2/AD2
12	NIC*	27	P2.3/A11	42	P0.1/AD1
13	P3.1/TxD	28	P2.4/A12	43	P0.0/AD0
14	P3.2/INT0	29	P2.5/A13	44	VCC
15	P3.3/INT1	30	P2.6/A14		

* NO INTERNAL CONNECTION

SU01062

PLASTIC QUAD FLAT PACK PIN FUNCTIONS

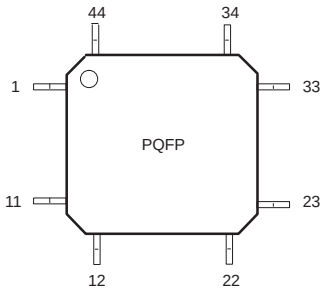

Pin	Function	Pin	Function	Pin	Function
1	P1.5	16	VSS	31	P0.6/AD6
2	P1.6	17	NIC*	32	P0.5/AD5
3	P1.7	18	P2.0/A8	33	P0.4/AD4
4	RST	19	P2.1/A9	34	P0.3/AD3
5	P3.0/RxD	20	P2.2/A10	35	P0.2/AD2
6	NIC*	21	P2.3/A11	36	P0.1/AD1
7	P3.1/TxD	22	P2.4/A12	37	P0.0/AD0
8	P3.2/INT0	23	P2.5/A13	38	VCC
9	P3.3/INT1	24	P2.6/A14	39	NIC*
10	P3.4/T0	25	P2.7/A15	40	P1.0/T2
11	P3.5/T1	26	PSEN	41	P1.1/T2EX
12	P3.6/WR	27	ALE	42	P1.2
13	P3.7/RD	28	NIC*	43	P1.3
14	XTAL2	29	EA/VPP	44	P1.4
15	XTAL1	30	P0.7/AD7		

* NO INTERNAL CONNECTION

SU01064

PIN DESCRIPTIONS

MNEMONIC	PIN NUMBER DIP	LCC	QFP	TYPE	NAME AND FUNCTION
V_{SS}	20	22	16	I	**Ground:** 0 V reference.
V_{CC}	40	44	38	I	**Power Supply:** This is the power supply voltage for normal, idle, and power-down operation.
P0.0–0.7	39–32	43–36	37–30	I/O	**Port 0:** Port 0 is an open-drain, bidirectional I/O port with Schmitt trigger inputs. Port 0 pins that have 1s written to them float and can be used as high-impedance inputs. Port 0 is also the multiplexed low-order address and data bus during accesses to external program and data memory. In this application, it uses strong internal pull-ups when emitting 1s.
P1.0–P1.7	1–8	2–9	40–44, 1–3	I/O	**Port 1:** Port 1 is an 8-bit bidirectional I/O port with internal pull-ups and Schmitt trigger inputs. Port 1 pins that have 1s written to them are pulled high by the internal pull-ups and can be used as inputs. As inputs, port 1 pins that are externally pulled low will source current because of the internal pull-ups. (See DC Electrical Characteristics: I_{IL}). Alternate functions for Port 1 include:
	1	2	40	I/O	**T2 (P1.0):** Timer/Counter 2 external count input/clockout (see Programmable Clock-Out)
	2	3	41	I	**T2EX (P1.1):** Timer/Counter 2 Reload/Capture/Direction control
P2.0–P2.7	21–28	24–31	18–25	I/O	**Port 2:** Port 2 is an 8-bit bidirectional I/O port with internal pull-ups and Schmitt trigger inputs. Port 2 pins that have 1s written to them are pulled high by the internal pull-ups and can be used as inputs. As inputs, port 2 pins that are externally being pulled low will source current because of the internal pull-ups. (See DC Electrical Characteristics: I_{IL}). Port 2 emits the high-order address byte during fetches from external program memory and during accesses to external data memory that use 16-bit addresses (MOVX @DPTR). In this application, it uses strong internal pull-ups when emitting 1s. During accesses to external data memory that use 8-bit addresses (MOV @Ri), port 2 emits the contents of the P2 special function register.
P3.0–P3.7	10–17	11, 13–19	5, 7–13	I/O	**Port 3:** Port 3 is an 8-bit bidirectional I/O port with internal pull-ups and Schmitt trigger inputs. Port 3 pins that have 1s written to them are pulled high by the internal pull-ups and can be used as inputs. As inputs, port 3 pins that are externally being pulled low will source current because of the pull-ups. (See DC Electrical Characteristics: I_{IL}). Port 3 also serves the special features of the 80C51 family, as listed below:
	10	11	5	I	**RxD (P3.0):** Serial input port
	11	13	7	O	**TxD (P3.1):** Serial output port
	12	14	8	I	**$\overline{INT0}$ (P3.2):** External interrupt
	13	15	9	I	**$\overline{INT1}$ (P3.3):** External interrupt
	14	16	10	I	**T0 (P3.4):** Timer 0 external input
	15	17	11	I	**T1 (P3.5):** Timer 1 external input
	16	18	12	O	**$\overline{WR}$ (P3.6):** External data memory write strobe
	17	19	13	O	**$\overline{RD}$ (P3.7):** External data memory read strobe
RST	9	10	4	I	**Reset:** A high on this pin for two machine cycles while the oscillator is running, resets the device. An internal diffused resistor to V_{SS} permits a power-on reset using only an external capacitor to V_{CC}.
ALE	30	33	27	O	**Address Latch Enable:** Output pulse for latching the low byte of the address during an access to external memory. In normal operation, ALE is emitted at a constant rate of 1/6 the oscillator frequency, and can be used for external timing or clocking. Note that one ALE pulse is skipped during each access to external data memory. ALE can be disabled by setting SFR auxiliary.0. With this bit set, ALE will be active only during a MOVX instruction.
$\overline{PSEN}$	29	32	26	O	**Program Store Enable:** The read strobe to external program memory. When the 80C31/32 is executing code from the external program memory, $\overline{PSEN}$ is activated twice each machine cycle, except that two $\overline{PSEN}$ activations are skipped during each access to external data memory. $\overline{PSEN}$ is not activated during fetches from internal program memory.
$\overline{EA}/V_{PP}$	31	35	29	I	**External Access Enable/Programming Supply Voltage:** $\overline{EA}$ must be externally held low to enable the device to fetch code from external program memory locations 0000H to 0FFFH.
XTAL1	19	21	15	I	**Crystal 1:** Input to the inverting oscillator amplifier and input to the internal clock generator circuits.
XTAL2	18	20	14	O	**Crystal 2:** Output from the inverting oscillator amplifier.

NOTE:
To avoid “latch-up” effect at power-on, the voltage on any pin at any time must not be higher than V_{CC} + 0.5 V or V_{SS} – 0.5 V, respectively.

Table 1. 8XC51/80C31 Special Function Registers

SYMBOL	DESCRIPTION	DIRECT ADDRESS	BIT ADDRESS, SYMBOL, OR ALTERNATIVE PORT FUNCTION MSB							LSB	RESET VALUE
ACC*	Accumulator	E0H	E7	E6	E5	E4	E3	E2	E1	E0	00H
AUXR#	Auxiliary	8EH	–	–	–	–	–	–	–	AO	xxxxxxx0B
AUXR1#	Auxiliary 1	A2H	–	–	–	–	WUPD[2]	0	–	DPS	xxx000x0B
B*	B register	F0H	F7	F6	F5	F4	F3	F2	F1	F0	00H
DPTR:	Data Pointer (2 bytes)										
DPH	Data Pointer High	83H									00H
DPL	Data Pointer Low	82H									00H
			AF	AE	AD	AC	AB	AA	A9	A8	
IE*	Interrupt Enable	A8H	EA	–	ET2	ES	ET1	EX1	ET0	EX0	0x000000B
			BF	BE	BD	BC	BB	BA	B9	B8	
IP*	Interrupt Priority	B8H	–	–	PT2	PS	PT1	PX1	PT0	PX0	xx000000B
			B7	B6	B5	B4	B3	B2	B1	B0	
IPH#	Interrupt Priority High	B7H	–	–	PT2H	PSH	PT1H	PX1H	PT0H	PX0H	xx000000B
			87	86	85	84	83	82	81	80	
P0*	Port 0	80H	AD7	AD6	AD5	AD4	AD3	AD2	AD1	AD0	FFH
			97	96	95	94	93	92	91	90	
P1*	Port 1	90H	–	–	–	–	–	–	T2EX	T2	FFH
			A7	A6	A5	A4	A3	A2	A1	A0	
P2*	Port 2	A0H	AD15	AD14	AD13	AD12	AD11	AD10	AD9	AD8	FFH
			B7	B6	B5	B4	B3	B2	B1	B0	
P3*	Port 3	B0H	$\overline{RD}$	$\overline{WR}$	T1	T0	$\overline{INT1}$	$\overline{INT0}$	TxD	RxD	FFH
PCON#[1]	Power Control	87H	SMOD1	SMOD0	–	POF	GF1	GF0	PD	IDL	00xx0000B
			D7	D6	D5	D4	D3	D2	D1	D0	
PSW*	Program Status Word	D0H	CY	AC	F0	RS1	RS0	OV	–	P	000000x0B
RACAP2H#	Timer 2 Capture High	CBH									00H
RACAP2L#	Timer 2 Capture Low	CAH									00H
SADDR#	Slave Address	A9H									00H
SADEN#	Slave Address Mask	B9H									00H
SBUF	Serial Data Buffer	99H									xxxxxxxxB
			9F	9E	9D	9C	9B	9A	99	98	
SCON*	Serial Control	98H	SM0/FE	SM1	SM2	REN	TB8	RB8	TI	RI	00H
SP	Stack Pointer	81H									07H
			8F	8E	8D	8C	8B	8A	89	88	
TCON*	Timer Control	88H	TF1	TR1	TF0	TR0	IE1	IT1	IE0	IT0	00H
			CF	CE	CD	CC	CB	CA	C9	C8	
T2CON*	Timer 2 Control	C8H	TF2	EXF2	RCLK	TCLK	EXEN2	TR2	C/$\overline{T2}$	CP/$\overline{RL2}$	00H
T2MOD#	Timer 2 Mode Control	C9H	–	–	–	–	–	–	T2OE	DCEN	xxxxxx00B
TH0	Timer High 0	8CH									00H
TH1	Timer High 1	8DH									00H
TH2#	Timer High 2	CDH									00H
TL0	Timer Low 0	8AH									00H
TL1	Timer Low 1	8BH									00H
TL2#	Timer Low 2	CCH									00H
TMOD	Timer Mode	89H	GATE	C/$\overline{T}$	M1	M0	GATE	C/$\overline{T}$	M1	M0	00H

NOTE:
Unused register bits that are not defined should not be set by the user's program. If violated, the device could function incorrectly.
* SFRs are bit addressable.
\# SFRs are modified from or added to the 80C51 SFRs.
– Reserved bits.
1. Reset value depends on reset source.
2. Not available on 80C31.

OSCILLATOR CHARACTERISTICS

XTAL1 and XTAL2 are the input and output, respectively, of an inverting amplifier. The pins can be configured for use as an on-chip oscillator, as shown in the logic symbol.

To drive the device from an external clock source, XTAL1 should be driven while XTAL2 is left unconnected. There are no requirements on the duty cycle of the external clock signal, because the input to the internal clock circuitry is through a divide-by-two flip-flop. However, minimum and maximum high and low times specified in the data sheet must be observed.

Reset

A reset is accomplished by holding the RST pin high for at least two machine cycles (24 oscillator periods), while the oscillator is running. To insure a good power-up reset, the RST pin must be high long enough to allow the oscillator time to start up (normally a few milliseconds) plus two machine cycles.

Stop Clock Mode

The static design enables the clock speed to be reduced down to 0 MHz (stopped). When the oscillator is stopped, the RAM and Special Function Registers retain their values. This mode allows step-by-step utilization and permits reduced system power consumption by lowering the clock frequency down to any value. For lowest power consumption the Power Down mode is suggested.

Idle Mode

In idle mode (see Table 2), the CPU puts itself to sleep while all of the on-chip peripherals stay active. The instruction to invoke the idle mode is the last instruction executed in the normal operating mode before the idle mode is activated. The CPU contents, the on-chip RAM, and all of the special function registers remain intact during this mode. The idle mode can be terminated either by any enabled interrupt (at which time the process is picked up at the interrupt service routine and continued), or by a hardware reset which starts the processor in the same manner as a power-on reset.

Power-Down Mode

To save even more power, a Power Down mode (see Table 2) can be invoked by software. In this mode, the oscillator is stopped and the instruction that invoked Power Down is the last instruction executed. The on-chip RAM and Special Function Registers retain their values down to 2.0 V and care must be taken to return V_{CC} to the minimum specified operating voltages before the Power Down Mode is terminated.

For the 80C31 or 80C32, either a hardware reset or external interrupt can be used to exit from Power Down. Reset redefines all the SFRs but does not change the on-chip RAM. An external interrupt allows both the SFRs and the on-chip RAM to retain their values. WUPD (AUXR1.3–Wakeup from Power Down) enables or disables the wakeup from power down with external interrupt. Where:

WUPD = 0 Disable
WUPD = 1 Enable

To properly terminate Power Down the reset or external interrupt should not be executed before V_{CC} is restored to its normal operating level and must be held active long enough for the oscillator to restart and stabilize (normally less than 10 ms).

With an external interrupt, INT0 or INT1 must be enabled and configured as level-sensitive. Holding the pin low restarts the oscillator but bringing the pin back high completes the exit. Once the interrupt is serviced, the next instruction to be executed after RETI will be the one following the instruction that put the device into Power Down.

For the 80C31, wakeup from power down is always enabled.

Design Consideration

- When the idle mode is terminated by a hardware reset, the device normally resumes program execution, from where it left off, up to two machine cycles before the internal reset algorithm takes control. On-chip hardware inhibits access to internal RAM in this event, but access to the port pins is not inhibited. To eliminate the possibility of an unexpected write when Idle is terminated by reset, the instruction following the one that invokes Idle should not be one that writes to a port pin or to external memory.

ONCE™ Mode

The ONCE ("On-Circuit Emulation") Mode facilitates testing and debugging of systems without the device having to be removed from the circuit. The ONCE Mode is invoked by:

1. Pull ALE low while the device is in reset and $\overline{PSEN}$ is high;
2. Hold ALE low as RST is deactivated.

While the device is in ONCE Mode, the Port 0 pins go into a float state, and the other port pins and ALE and $\overline{PSEN}$ are weakly pulled high. The oscillator circuit remains active. While the 80C31/32 is in this mode, an emulator or test CPU can be used to drive the circuit. Normal operation is restored when a normal reset is applied.

Table 2. External Pin Status During Idle and Power-Down Modes

MODE	PROGRAM MEMORY	ALE	$\overline{PSEN}$	PORT 0	PORT 1	PORT 2	PORT 3
Idle	Internal	1	1	Data	Data	Data	Data
Idle	External	1	1	Float	Data	Address	Data
Power-down	Internal	0	0	Data	Data	Data	Data
Power-down	External	0	0	Float	Data	Data	Data

Programmable Clock-Out

A 50% duty cycle clock can be programmed to come out on P1.0. This pin, besides being a regular I/O pin, has two alternate functions. It can be programmed:

1. to input the external clock for Timer/Counter 2, or
2. to output a 50% duty cycle clock ranging from 61 Hz to 4 MHz at a 16 MHz operating frequency.

To configure the Timer/Counter 2 as a clock generator, bit C/T2 (in T2CON) must be cleared and bit T20E in T2MOD must be set. Bit TR2 (T2CON.2) also must be set to start the timer.

The Clock-Out frequency depends on the oscillator frequency and the reload value of Timer 2 capture registers (RCAP2H, RCAP2L) as shown in this equation:

$$\frac{\text{Oscillator Frequency}}{4 \times (65536 - \text{RCAP2H, RCAP2L})}$$

Where:

(RCAP2H,RCAP2L) = the content of RCAP2H and RCAP2L taken as a 16-bit unsigned integer.

In the Clock-Out mode Timer 2 roll-overs will not generate an interrupt. This is similar to when it is used as a baud-rate generator. It is possible to use Timer 2 as a baud-rate generator and a clock generator simultaneously. Note, however, that the baud-rate and the Clock-Out frequency will be the same.

TIMER 2 OPERATION

Timer 2

Timer 2 is a 16-bit Timer/Counter which can operate as either an event timer or an event counter, as selected by C/$\overline{T}$2* in the special function register T2CON (see Figure 1). Timer 2 has three operating modes:Capture, Auto-reload (up or down counting) ,and Baud Rate Generator, which are selected by bits in the T2CON as shown in Table 3.

Capture Mode

In the capture mode there are two options which are selected by bit EXEN2 in T2CON. If EXEN2=0, then timer 2 is a 16-bit timer or counter (as selected by C/T2* in T2CON) which, upon overflowing sets bit TF2, the timer 2 overflow bit. This bit can be used to generate an interrupt (by enabling the Timer 2 interrupt bit in the IE register). If EXEN2= 1, Timer 2 operates as described above, but with the added feature that a 1- to -0 transition at external input T2EX causes the current value in the Timer 2 registers, TL2 and TH2, to be captured into registers RCAP2L and RCAP2H, respectively. In addition, the transition at T2EX causes bit EXF2 in T2CON to be set, and EXF2 like TF2 can generate an interrupt (which vectors to the same location as Timer 2 overflow interrupt. The Timer 2 interrupt service routine can interrogate TF2 and EXF2 to determine which event caused the interrupt). The capture mode is illustrated in Figure 2 (There is no reload value for TL2 and TH2 in this mode. Even when a capture event occurs from T2EX, the counter keeps on counting T2EX pin transitions or osc/12 pulses.).

Auto-Reload Mode (Up or Down Counter)

In the 16-bit auto-reload mode, Timer 2 can be configured (as either a timer or counter (C/T2* in T2CON)) then programmed to count up or down. The counting direction is determined by bit DCEN (Down Counter Enable) which is located in the T2MOD register (see Figure 3). When reset is applied the DCEN=0 which means Timer 2 will default to counting up. If DCEN bit is set, Timer 2 can count up or down depending on the value of the T2EX pin.

Figure 4 shows Timer 2 which will count up automatically since DCEN=0. In this mode there are two options selected by bit EXEN2 in T2CON register. If EXEN2=0, then Timer 2 counts up to 0FFFFH and sets the TF2 (Overflow Flag) bit upon overflow. This causes the Timer 2 registers to be reloaded with the 16-bit value in RCAP2L and RCAP2H. The values in RCAP2L and RCAP2H are preset by software means.

If EXEN2=1, then a 16-bit reload can be triggered either by an overflow or by a 1-to-0 transition at input T2EX. This transition also sets the EXF2 bit. The Timer 2 interrupt, if enabled, can be generated when either TF2 or EXF2 are 1.

In Figure 5 DCEN=1 which enables Timer 2 to count up or down. This mode allows pin T2EX to control the direction of count. When a logic 1 is applied at pin T2EX Timer 2 will count up. Timer 2 will overflow at 0FFFFH and set the TF2 flag, which can then generate an interrupt, if the interrupt is enabled. This timer overflow also causes the 16–bit value in RCAP2L and RCAP2H to be reloaded into the timer registers TL2 and TH2.

When a logic 0 is applied at pin T2EX this causes Timer 2 to count down. The timer will underflow when TL2 and TH2 become equal to the value stored in RCAP2L and RCAP2H. Timer 2 underflow sets the TF2 flag and causes 0FFFFH to be reloaded into the timer registers TL2 and TH2.

The external flag EXF2 toggles when Timer 2 underflows or overflows. This EXF2 bit can be used as a 17th bit of resolution if needed. The EXF2 flag does not generate an interrupt in this mode of operation.

Table 3. Timer 2 Operating Modes

RCLK + TCLK	CP/$\overline{RL2}$	TR2	MODE
0	0	1	16-bit Auto-reload
0	1	1	16-bit Capture
1	X	1	Baud rate generator
X	X	0	(off)

(MSB)							(LSB)
TF2	EXF2	RCLK	TCLK	EXEN2	TR2	C/$\overline{T2}$	CP/$\overline{RL2}$

Symbol	Position	Name and Significance
TF2	T2CON.7	Timer 2 overflow flag set by a Timer 2 overflow and must be cleared by software. TF2 will not be set when either RCLK or TCLK = 1.
EXF2	T2CON.6	Timer 2 external flag set when either a capture or reload is caused by a negative transition on T2EX and EXEN2 = 1. When Timer 2 interrupt is enabled, EXF2 = 1 will cause the CPU to vector to the Timer 2 interrupt routine. EXF2 must be cleared by software. EXF2 does not cause an interrupt in up/down counter mode (DCEN = 1).
RCLK	T2CON.5	Receive clock flag. When set, causes the serial port to use Timer 2 overflow pulses for its receive clock in modes 1 and 3. RCLK = 0 causes Timer 1 overflow to be used for the receive clock.
TCLK	T2CON.4	Transmit clock flag. When set, causes the serial port to use Timer 2 overflow pulses for its transmit clock in modes 1 and 3. TCLK = 0 causes Timer 1 overflows to be used for the transmit clock.
EXEN2	T2CON.3	Timer 2 external enable flag. When set, allows a capture or reload to occur as a result of a negative transition on T2EX if Timer 2 is not being used to clock the serial port. EXEN2 = 0 causes Timer 2 to ignore events at T2EX.
TR2	T2CON.2	Start/stop control for Timer 2. A logic 1 starts the timer.
C/$\overline{T2}$	T2CON.1	Timer or counter select. (Timer 2) 0 = Internal timer (OSC/12) 1 = External event counter (falling edge triggered).
CP/$\overline{RL2}$	T2CON.0	Capture/Reload flag. When set, captures will occur on negative transitions at T2EX if EXEN2 = 1. When cleared, auto-reloads will occur either with Timer 2 overflows or negative transitions at T2EX when EXEN2 = 1. When either RCLK = 1 or TCLK = 1, this bit is ignored and the timer is forced to auto-reload on Timer 2 overflow.

SU00728

Figure 1. Timer/Counter 2 (T2CON) Control Register

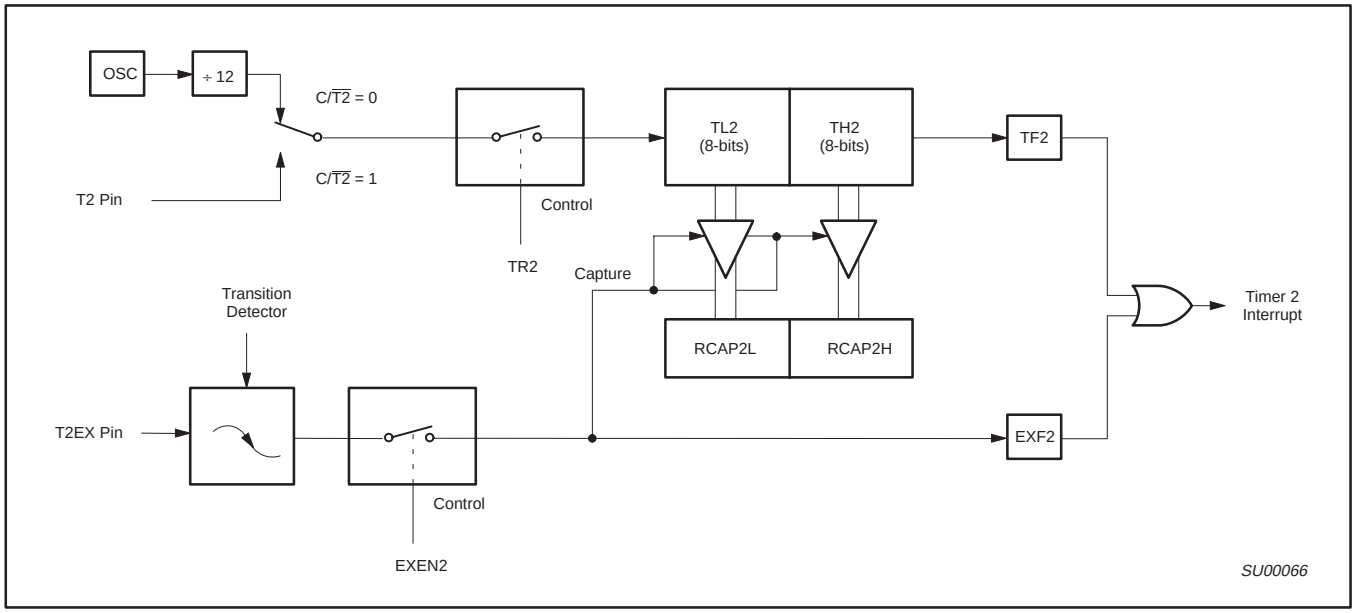

Figure 2. Timer 2 in Capture Mode

T2MOD Address = 0C9H Reset Value = XXXX XX00B

Not Bit Addressable

—	—	—	—	—	—	T2OE	DCEN
7	6	5	4	3	2	1	0

Bit

Symbol	Function
—	Not implemented, reserved for future use.*
T2OE	Timer 2 Output Enable bit.
DCEN	Down Count Enable bit. When set, this allows Timer 2 to be configured as an up/down counter.

* User software should not write 1s to reserved bits. These bits may be used in future 8051 family products to invoke new features. In that case, the reset or inactive value of the new bit will be 0, and its active value will be 1. The value read from a reserved bit is indeterminate.

SU00729

Figure 3. Timer 2 Mode (T2MOD) Control Register

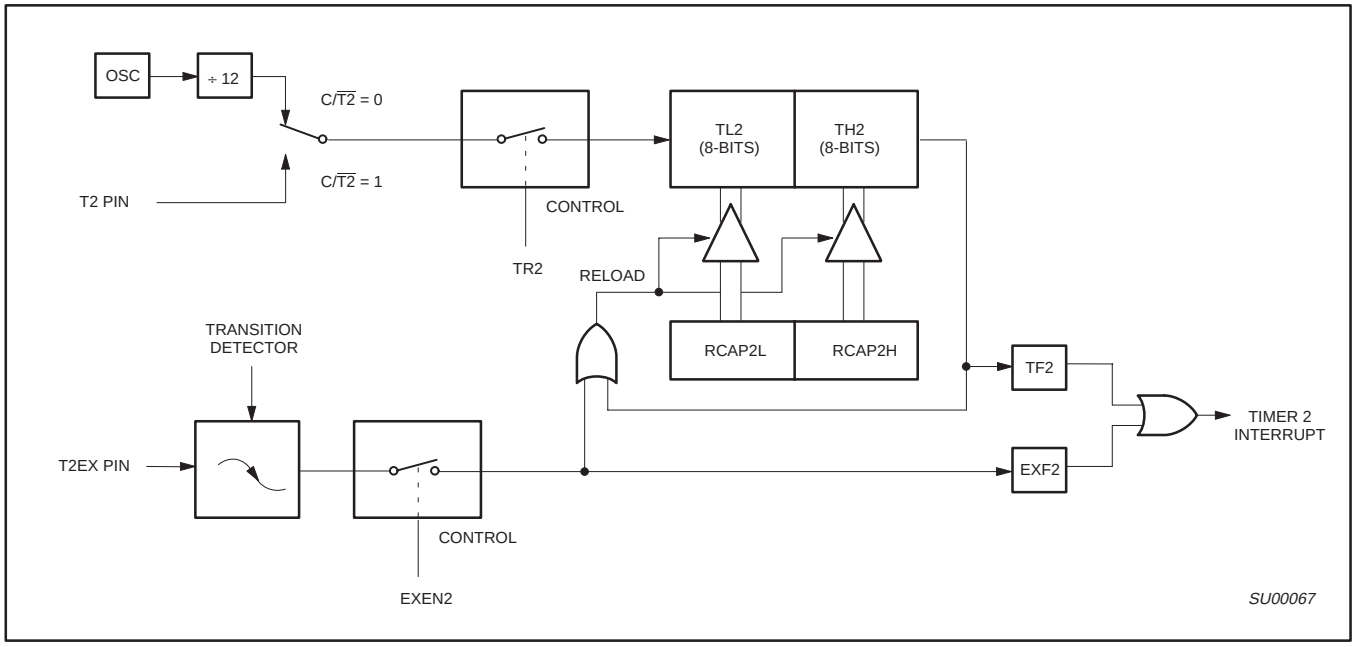

Figure 4. Timer 2 in Auto-Reload Mode (DCEN = 0)

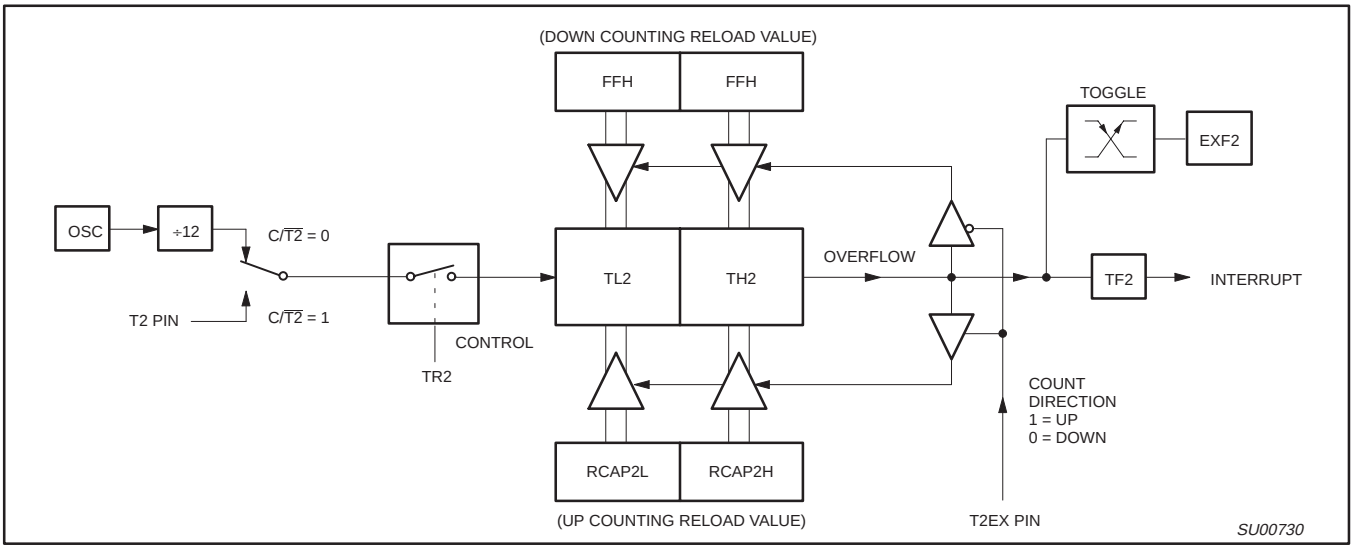

Figure 5. Timer 2 Auto Reload Mode (DCEN = 1)

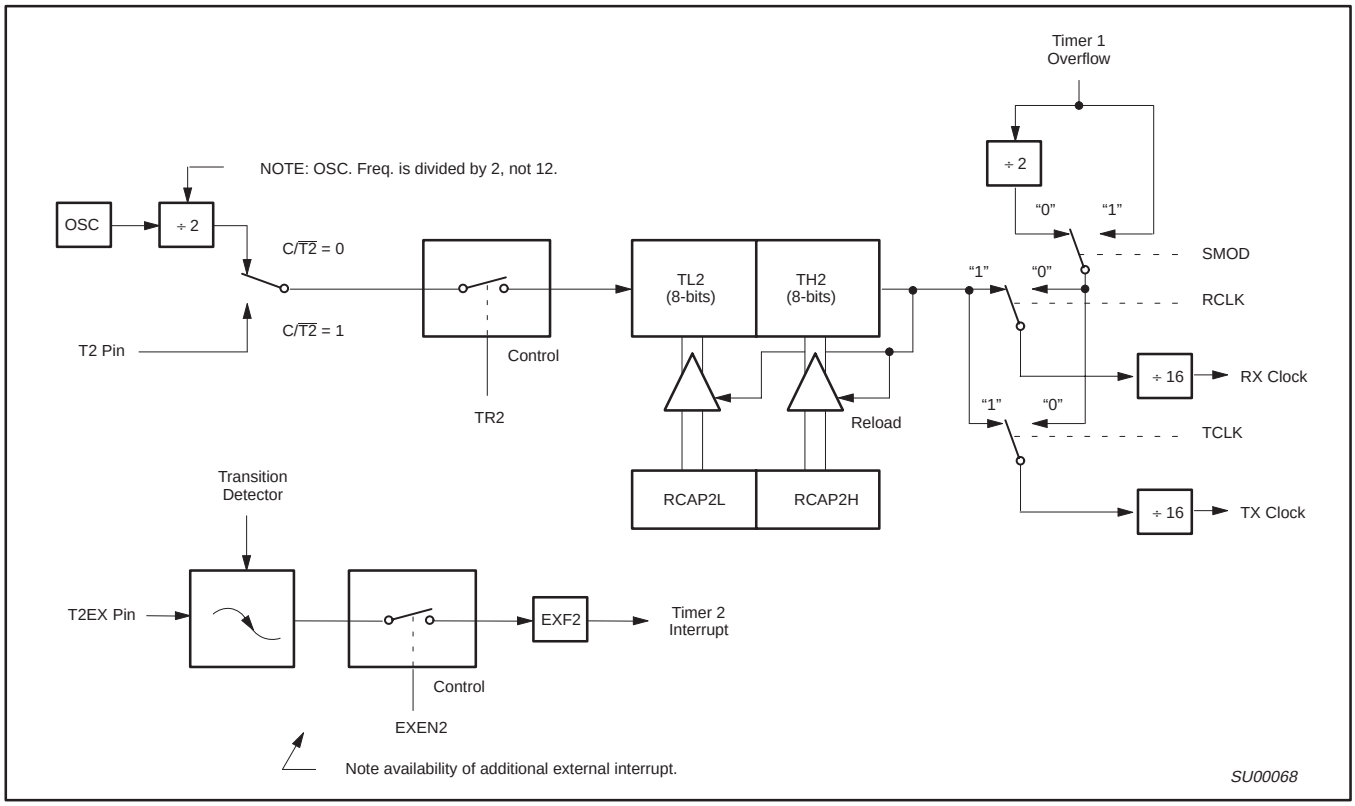

Figure 6. Timer 2 in Baud Rate Generator Mode

Baud Rate Generator Mode

Bits TCLK and/or RCLK in T2CON (Table 3) allow the serial port transmit and receive baud rates to be derived from either Timer 1 or Timer 2. When TCLK= 0, Timer 1 is used as the serial port transmit baud rate generator. When TCLK= 1, Timer 2 is used as the serial port transmit baud rate generator. RCLK has the same effect for the serial port receive baud rate. With these two bits, the serial port can have different receive and transmit baud rates – one generated by Timer 1, the other by Timer 2.

Figure 6 shows the Timer 2 in baud rate generation mode. The baud rate generation mode is like the auto-reload mode, in that a rollover in TH2 causes the Timer 2 registers to be reloaded with the 16-bit value in registers RCAP2H and RCAP2L, which are preset by software.

The baud rates in modes 1 and 3 are determined by Timer 2's overflow rate given below:

$$\text{Modes 1 and 3 Baud Rates} = \frac{\text{Timer 2 Overflow Rate}}{16}$$

The timer can be configured for either "timer" or "counter" operation. In many applications, it is configured for "timer" operation ($C/\overline{T}2^*=0$). Timer operation is different for Timer 2 when it is being used as a baud rate generator.

Usually, as a timer it would increment every machine cycle (i.e., 1/12 the oscillator frequency). As a baud rate generator, it increments every state time (i.e., 1/2 the oscillator frequency). Thus the baud rate formula is as follows:

$$\text{Modes 1 and 3 Baud Rates} = \frac{\text{Oscillator Frequency}}{[32 \times [65536 - (\text{RCAP2H}, \text{RCAP2L})]]}$$

Where: (RCAP2H, RCAP2L)= The content of RCAP2H and RCAP2L taken as a 16-bit unsigned integer.

The Timer 2 as a baud rate generator mode shown in Figure 6, is valid only if RCLK and/or TCLK = 1 in T2CON register. Note that a rollover in TH2 does not set TF2, and will not generate an interrupt. Thus, the Timer 2 interrupt does not have to be disabled when Timer 2 is in the baud rate generator mode. Also if the EXEN2 (T2 external enable flag) is set, a 1-to-0 transition in T2EX (Timer/counter 2 trigger input) will set EXF2 (T2 external flag) but will not cause a reload from (RCAP2H, RCAP2L) to (TH2,TL2). Therefore when Timer 2 is in use as a baud rate generator, T2EX can be used as an additional external interrupt, if needed.

When Timer 2 is in the baud rate generator mode, one should not try to read or write TH2 and TL2. As a baud rate generator, Timer 2 is incremented every state time (osc/2) or asynchronously from pin T2; under these conditions, a read or write of TH2 or TL2 may not be accurate. The RCAP2 registers may be read, but should not be written to, because a write might overlap a reload and cause write and/or reload errors. The timer should be turned off (clear TR2) before accessing the Timer 2 or RCAP2 registers.

Table 4 shows commonly used baud rates and how they can be obtained from Timer 2.

Table 4. Timer 2 Generated Commonly Used Baud Rates

Baud Rate	Osc Freq	Timer 2	
		RCAP2H	RCAP2L
375 K	12 MHz	FF	FF
9.6 K	12 MHz	FF	D9
2.8 K	12 MHz	FF	B2
2.4 K	12 MHz	FF	64
1.2 K	12 MHz	FE	C8
300	12 MHz	FB	1E
110	12 MHz	F2	AF
300	6 MHz	FD	8F
110	6 MHz	F9	57

Summary Of Baud Rate Equations

Timer 2 is in baud rate generating mode. If Timer 2 is being clocked through pin T2(P1.0) the baud rate is:

$$\text{Baud Rate} = \frac{\text{Timer 2 Overflow Rate}}{16}$$

If Timer 2 is being clocked internally, the baud rate is:

$$\text{Baud Rate} = \frac{f_{OSC}}{[32 \times [65536 - (\text{RCAP2H}, \text{RCAP2L})]]}$$

Where f_{OSC}= Oscillator Frequency

To obtain the reload value for RCAP2H and RCAP2L, the above equation can be rewritten as:

$$\text{RCAP2H}, \text{RCAP2L} = 65536 - \left(\frac{f_{OSC}}{32 \times \text{Baud Rate}}\right)$$

Timer/Counter 2 Set-up

Except for the baud rate generator mode, the values given for T2CON do not include the setting of the TR2 bit. Therefore, bit TR2 must be set, separately, to turn the timer on. See Table 5 for set-up of Timer 2 as a timer. Also see Table 6 for set-up of Timer 2 as a counter.

Table 5. Timer 2 as a Timer

MODE	T2CON	
	INTERNAL CONTROL (Note 1)	EXTERNAL CONTROL (Note 2)
16-bit Auto-Reload	00H	08H
16-bit Capture	01H	09H
Baud rate generator receive and transmit same baud rate	34H	36H
Receive only	24H	26H
Transmit only	14H	16H

Table 6. Timer 2 as a Counter

MODE	TMOD	
	INTERNAL CONTROL (Note 1)	EXTERNAL CONTROL (Note 2)
16-bit	02H	0AH
Auto-Reload	03H	0BH

NOTES:
1. Capture/reload occurs only on timer/counter overflow.
2. Capture/reload occurs on timer/counter overflow and a 1-to-0 transition on T2EX (P1.1) pin except when Timer 2 is used in the baud rate generator mode.

Enhanced UART

The UART operates in all of the usual modes that are described in the first section of *Data Handbook IC20, 80C51-Based 8-Bit Microcontrollers*. In addition the UART can perform framing error detect by looking for missing stop bits, and automatic address recognition. The 80C31/32 UART also fully supports multiprocessor communication.

When used for framing error detect the UART looks for missing stop bits in the communication. A missing bit will set the FE bit in the SCON register. The FE bit shares the SCON.7 bit with SM0 and the function of SCON.7 is determined by PCON.6 (SMOD0) (see Figure 7). If SMOD0 is set then SCON.7 functions as FE. SCON.7 functions as SM0 when SMOD0 is cleared. When used as FE SCON.7 can only be cleared by software. Refer to Figure 8.

Automatic Address Recognition

Automatic Address Recognition is a feature which allows the UART to recognize certain addresses in the serial bit stream by using hardware to make the comparisons. This feature saves a great deal of software overhead by eliminating the need for the software to examine every serial address which passes by the serial port. This feature is enabled by setting the SM2 bit in SCON. In the 9 bit UART modes, mode 2 and mode 3, the Receive Interrupt flag (RI) will be automatically set when the received byte contains either the “Given” address or the “Broadcast” address. The 9 bit mode requires that the 9th information bit is a 1 to indicate that the received information is an address and not data. Automatic address recognition is shown in Figure 9.

The 8 bit mode is called Mode 1. In this mode the RI flag will be set if SM2 is enabled and the information received has a valid stop bit following the 8 address bits and the information is either a Given or Broadcast address.

Mode 0 is the Shift Register mode and SM2 is ignored.

Using the Automatic Address Recognition feature allows a master to selectively communicate with one or more slaves by invoking the Given slave address or addresses. All of the slaves may be contacted by using the Broadcast address. Two special Function Registers are used to define the slave’s address, SADDR, and the address mask, SADEN. SADEN is used to define which bits in the SADDR are to b used and which bits are “don’t care”. The SADEN mask can be logically ANDed with the SADDR to create the “Given” address which the master will use for addressing each of the slaves. Use of the Given address allows multiple slaves to be recognized while excluding others. The following examples will help to show the versatility of this scheme:

Slave 0	SADDR	=	1100 0000
	SADEN	=	1111 1101
	Given	=	1100 00X0
Slave 1	SADDR	=	1100 0000
	SADEN	=	1111 1110
	Given	=	1100 000X

In the above example SADDR is the same and the SADEN data is used to differentiate between the two slaves. Slave 0 requires a 0 in bit 0 and it ignores bit 1. Slave 1 requires a 0 in bit 1 and bit 0 is ignored. A unique address for Slave 0 would be 1100 0010 since slave 1 requires a 0 in bit 1. A unique address for slave 1 would be 1100 0001 since a 1 in bit 0 will exclude slave 0. Both slaves can be selected at the same time by an address which has bit 0 = 0 (for slave 0) and bit 1 = 0 (for slave 1). Thus, both could be addressed with 1100 0000.

In a more complex system the following could be used to select slaves 1 and 2 while excluding slave 0:

Slave 0	SADDR	=	1100 0000
	SADEN	=	1111 1001
	Given	=	1100 0XX0
Slave 1	SADDR	=	1110 0000
	SADEN	=	1111 1010
	Given	=	1110 0X0X
Slave 2	SADDR	=	1110 0000
	SADEN	=	1111 1100
	Given	=	1110 00XX

In the above example the differentiation among the 3 slaves is in the lower 3 address bits. Slave 0 requires that bit 0 = 0 and it can be uniquely addressed by 1110 0110. Slave 1 requires that bit 1 = 0 and it can be uniquely addressed by 1110 and 0101. Slave 2 requires that bit 2 = 0 and its unique address is 1110 0011. To select Slaves 0

and 1 and exclude Slave 2 use address 1110 0100, since it is necessary to make bit 2 = 1 to exclude slave 2.

The Broadcast Address for each slave is created by taking the logical OR of SADDR and SADEN. Zeros in this result are trended as don't-cares. In most cases, interpreting the don't-cares as ones, the broadcast address will be FF hexadecimal.

Upon reset SADDR (SFR address 0A9H) and SADEN (SFR address 0B9H) are leaded with 0s. This produces a given address of all "don't cares" as well as a Broadcast address of all "don't cares". This effectively disables the Automatic Addressing mode and allows the microcontroller to use standard 80C51 type UART drivers which do not make use of this feature.

SCON Address = 98H — Reset Value = 0000 0000B

Bit Addressable

	SM0/FE	SM1	SM2	REN	TB8	RB8	TI	RI
Bit:	7	6	5	4	3	2	1	0
	(SMOD0 = 0/1)*							

Symbol	Function
FE	Framing Error bit. This bit is set by the receiver when an invalid stop bit is detected. The FE bit is not cleared by valid frames but should be cleared by software. The SMOD0 bit must be set to enable access to the FE bit.
SM0	Serial Port Mode Bit 0, (SMOD0 must = 0 to access bit SM0)
SM1	Serial Port Mode Bit 1

SM0	SM1	Mode	Description	Baud Rate**
0	0	0	shift register	$f_{OSC}/12$
0	1	1	8-bit UART	variable
1	0	2	9-bit UART	$f_{OSC}/64$ or $f_{OSC}/32$
1	1	3	9-bit UART	variable

SM2	Enables the Automatic Address Recognition feature in Modes 2 or 3. If SM2 = 1 then RI will not be set unless the received 9th data bit (RB8) is 1, indicating an address, and the received byte is a Given or Broadcast Address. In Mode 1, if SM2 = 1 then RI will not be activated unless a valid stop bit was received, and the received byte is a Given or Broadcast Address. In Mode 0, SM2 should be 0.
REN	Enables serial reception. Set by software to enable reception. Clear by software to disable reception.
TB8	The 9th data bit that will be transmitted in Modes 2 and 3. Set or clear by software as desired.
RB8	In modes 2 and 3, the 9th data bit that was received. In Mode 1, if SM2 = 0, RB8 is the stop bit that was received. In Mode 0, RB8 is not used.
TI	Transmit interrupt flag. Set by hardware at the end of the 8th bit time in Mode 0, or at the beginning of the stop bit in the other modes, in any serial transmission. Must be cleared by software.
RI	Receive interrupt flag. Set by hardware at the end of the 8th bit time in Mode 0, or halfway through the stop bit time in the other modes, in any serial reception (except see SM2). Must be cleared by software.

NOTE:
*SMOD0 is located at PCON6.
**f_{OSC} = oscillator frequency

SU00043

Figure 7. SCON: Serial Port Control Register

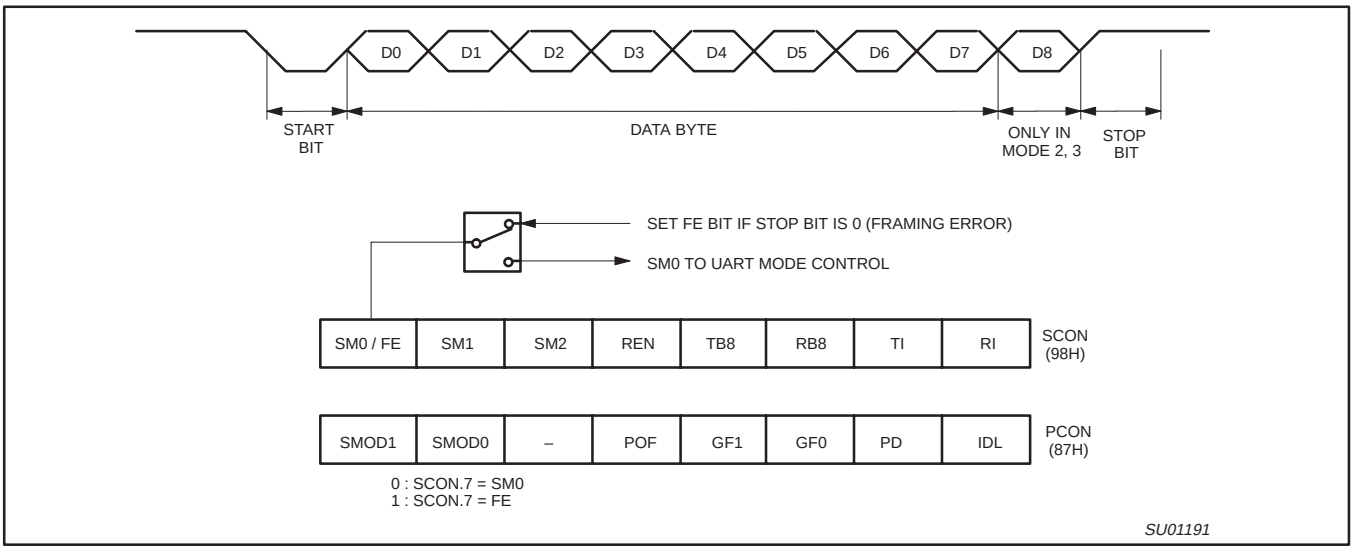

Figure 8. UART Framing Error Detection

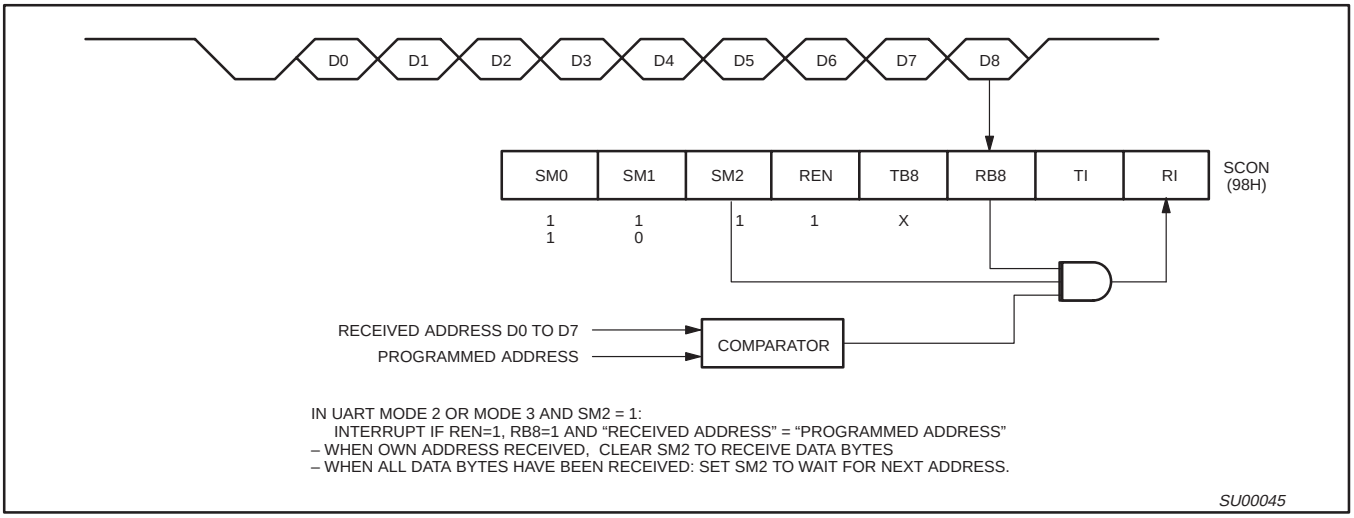

Figure 9. UART Multiprocessor Communication, Automatic Address Recognition

Interrupt Priority Structure

The 80C31 and 80C32 have a 6-source four-level interrupt structure. They are the IE, IP and IPH. (See Figures 10, 11, and 12.) The IPH (Interrupt Priority High) register that makes the four-level interrupt structure possible. The IPH is located at SFR address B7H. The structure of the IPH register and a description of its bits is shown in Figure 12.

The function of the IPH SFR is simple and when combined with the IP SFR determines the priority of each interrupt. The priority of each interrupt is determined as shown in the following table:

PRIORITY BITS		INTERRUPT PRIORITY LEVEL
IPH.x	IP.x	
0	0	Level 0 (lowest priority)
0	1	Level 1
1	0	Level 2
1	1	Level 3 (highest priority)

An interrupt will be serviced as long as an interrupt of equal or higher priority is not already being serviced. If an interrupt of equal or higher level priority is being serviced, the new interrupt will wait until it is finished before being serviced. If a lower priority level interrupt is being serviced, it will be stopped and the new interrupt serviced. When the new interrupt is finished, the lower priority level interrupt that was stopped will be completed.

Table 7. Interrupt Table

SOURCE	POLLING PRIORITY	REQUEST BITS	HARDWARE CLEAR?	VECTOR ADDRESS
X0	1	IE0	N (L)[1] Y (T)[2]	03H
T0	2	TP0	Y	0BH
X1	3	IE1	N (L) Y (T)	13H
T1	4	TF1	Y	1BH
SP	5	RI, TI	N	23H
T2	6	TF2, EXF2	N	2BH

NOTES:
1. L = Level activated
2. T = Transition activated

	7	6	5	4	3	2	1	0
IE (0A8H)	EA	—	ET2	ES	ET1	EX1	ET0	EX0

Enable Bit = 1 enables the interrupt.
Enable Bit = 0 disables it.

BIT	SYMBOL	FUNCTION
IE.7	EA	Global disable bit. If EA = 0, all interrupts are disabled. If EA = 1, each interrupt can be individually enabled or disabled by setting or clearing its enable bit.
IE.6	—	Not implemented. Reserved for future use.
IE.5	ET2	Timer 2 interrupt enable bit.
IE.4	ES	Serial Port interrupt enable bit.
IE.3	ET1	Timer 1 interrupt enable bit.
IE.2	EX1	External interrupt 1 enable bit.
IE.1	ET0	Timer 0 interrupt enable bit.
IE.0	EX0	External interrupt 0 enable bit.

SU00571

Figure 10. IE Registers

	7	6	5	4	3	2	1	0
IP (0B8H)	—	—	PT2	PS	PT1	PX1	PT0	PX0

Priority Bit = 1 assigns higher priority
Priority Bit = 0 assigns lower priority

BIT	SYMBOL	FUNCTION
IP.7	—	Not implemented, reserved for future use.
IP.6	—	Not implemented, reserved for future use.
IP.5	PT2	Timer 2 interrupt priority bit.
IP.4	PS	Serial Port interrupt priority bit.
IP.3	PT1	Timer 1 interrupt priority bit.
IP.2	PX1	External interrupt 1 priority bit.
IP.1	PT0	Timer 0 interrupt priority bit.
IP.0	PX0	External interrupt 0 priority bit.

SU00572

Figure 11. IP Registers

	7	6	5	4	3	2	1	0
IPH (B7H)	—	—	PT2H	PSH	PT1H	PX1H	PT0H	PX0H

Priority Bit = 1 assigns higher priority
Priority Bit = 0 assigns lower priority

BIT	SYMBOL	FUNCTION
IPH.7	—	Not implemented, reserved for future use.
IPH.6	—	Not implemented, reserved for future use.
IPH.5	PT2H	Timer 2 interrupt priority bit high.
IPH.4	PSH	Serial Port interrupt priority bit high.
IPH.3	PT1H	Timer 1 interrupt priority bit high.
IPH.2	PX1H	External interrupt 1 priority bit high.
IPH.1	PT0H	Timer 0 interrupt priority bit high.
IPH.0	PX0H	External interrupt 0 priority bit high.

SU01058

Figure 12. IPH Registers

Reduced EMI Mode

The AO bit (AUXR.0) in the AUXR register when set disables the ALE output.

Reduced EMI Mode

AUXR (8EH)

7	6	5	4	3	2	1	0
–	–	–	–	–	–	–	AO

AUXR.0 AO Turns off ALE output.

Dual DPTR

The dual DPTR structure (see Figure 13) enables a way to specify the address of an external data memory location. There are two 16-bit DPTR registers that address the external memory, and a single bit called DPS = AUXR1/bit0 that allows the program code to switch between them.

- New Register Name: AUXR1#
- SFR Address: A2H
- Reset Value: xxx000x0B

AUXR1 (A2H)

7	6	5	4	3	2	1	0
–	–	–	–	WUPD	0	–	DPS

Where:
DPS = AUXR1/bit0 = Switches between DPTR0 and DPTR1.

Select Reg	DPS
DPTR0	0
DPTR1	1

The DPS bit status should be saved by software when switching between DPTR0 and DPTR1.

Note that bit 2 is not writable and is always read as a zero. This allows the DPS bit to be quickly toggled simply by executing an INC DPTR instruction without affecting the WOPD or LPEP bits.

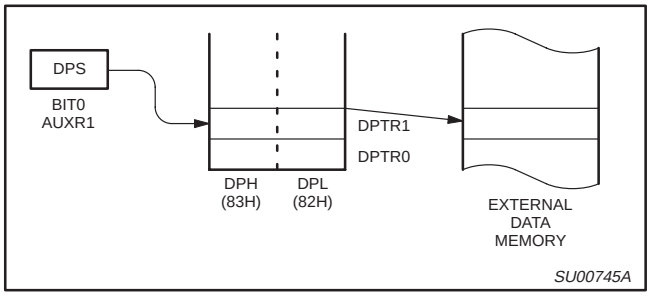

Figure 13.

DPTR Instructions

The instructions that refer to DPTR refer to the data pointer that is currently selected using the AUXR1/bit 0 register. The six instructions that use the DPTR are as follows:

INC DPTR	Increments the data pointer by 1
MOV DPTR, #data16	Loads the DPTR with a 16-bit constant
MOV A, @ A+DPTR	Move code byte relative to DPTR to ACC
MOVX A, @ DPTR	Move external RAM (16-bit address) to ACC
MOVX @ DPTR , A	Move ACC to external RAM (16-bit address)
JMP @ A + DPTR	Jump indirect relative to DPTR

The data pointer can be accessed on a byte-by-byte basis by specifying the low or high byte in an instruction which accesses the SFRs. See application note AN458 for more details.

ABSOLUTE MAXIMUM RATINGS[1, 2, 3]

PARAMETER	RATING	UNIT
Operating temperature under bias	0 to +70 or –40 to +85	°C
Storage temperature range	–65 to +150	°C
Voltage on $\overline{EA}$ pin to V_{SS}	0 to +13.0	V
Voltage on any other pin to V_{SS}	–0.5 to +6.5	V
Maximum I_{OL} per I/O pin	15	mA
Power dissipation (based on package heat transfer limitations, not device power consumption)	1.5	W

NOTES:
1. Stresses above those listed under Absolute Maximum Ratings may cause permanent damage to the device. This is a stress rating only and functional operation of the device at these or any conditions other than those described in the AC and DC Electrical Characteristics section of this specification is not implied.
2. This product includes circuitry specifically designed for the protection of its internal devices from the damaging effects of excessive static charge. Nonetheless, it is suggested that conventional precautions be taken to avoid applying greater than the rated maximum.
3. Parameters are valid over operating temperature range unless otherwise specified. All voltages are with respect to V_{SS} unless otherwise noted.

AC ELECTRICAL CHARACTERISTICS

T_{amb} = 0°C to +70°C or –40°C to +85°C

SYMBOL	FIGURE	PARAMETER	CLOCK FREQUENCY RANGE –f		UNIT
			MIN	MAX	
$1/t_{CLCL}$	29	Oscillator frequency			
		Speed versions : S (16 MHz)	0	16	MHz
		U (33 MHz)	0	33	MHz

DC ELECTRICAL CHARACTERISTICS

T_{amb} = 0°C to +70°C or –40°C to +85°C, V_{CC} = 2.7 V to 5.5 V, V_{SS} = 0 V (16 MHz devices)

SYMBOL	PARAMETER	TEST CONDITIONS	LIMITS			UNIT
			MIN	TYP[1]	MAX	
V_{IL}	Input low voltage	4.0 V < V_{CC} < 5.5 V	–0.5		0.2 V_{CC}–0.1	V
		2.7 V<V_{CC}< 4.0 V	–0.5		0.7	V
V_{IH}	Input high voltage (ports 0, 1, 2, 3, $\overline{EA}$)		0.2 V_{CC}+0.9		V_{CC}+0.5	V
V_{IH1}	Input high voltage, XTAL1, RST		0.7 V_{CC}		V_{CC}+0.5	V
V_{OL}	Output low voltage, ports 1, 2, [8]	V_{CC} = 2.7 V I_{OL} = 1.6 mA[2]			0.4	V
V_{OL1}	Output low voltage, port 0, ALE, $\overline{PSEN}$[8, 7]	V_{CC} = 2.7 V I_{OL} = 3.2 mA[2]			0.4	V
V_{OH}	Output high voltage, ports 1, 2, 3 [3]	V_{CC} = 2.7 V I_{OH} = –20 µA	V_{CC} – 0.7			V
		V_{CC} = 4.5 V I_{OH} = –30 µA	V_{CC} – 0.7			V
V_{OH1}	Output high voltage (port 0 in external bus mode), ALE[9], $\overline{PSEN}$[3]	V_{CC} = 2.7 V I_{OH} = –3.2 mA	V_{CC} – 0.7			V
I_{IL}	Logical 0 input current, ports 1, 2, 3	V_{IN} = 0.4 V	–1		–50	µA
I_{TL}	Logical 1-to-0 transition current, ports 1, 2, 3[6]	V_{IN} = 2.0 V See note 4			–650	µA
I_{LI}	Input leakage current, port 0	0.45 < V_{IN} < V_{CC} – 0.3			±10	µA
I_{CC}	Power supply current (see Figure 21): Active mode @ 16 MHz Idle mode @ 16 MHz Power-down mode or clock stopped (see Figure 25 for conditions)	See note 5 T_{amb} = 0°C to 70°C T_{amb} = –40°C to +85°C		 3	 50 75	 µA µA µA µA
R_{RST}	Internal reset pull-down resistor		40		225	kΩ
C_{IO}	Pin capacitance[10] (except $\overline{EA}$)				15	pF

NOTES:

1. Typical ratings are not guaranteed. The values listed are at room temperature, 5 V.
2. Capacitive loading on ports 0 and 2 may cause spurious noise to be superimposed on the V_{OL}s of ALE and ports 1 and 3. The noise is due to external bus capacitance discharging into the port 0 and port 2 pins when these pins make 1-to-0 transitions during bus operations. In the worst cases (capacitive loading > 100 pF), the noise pulse on the ALE pin may exceed 0.8 V. In such cases, it may be desirable to qualify ALE with a Schmitt Trigger, or use an address latch with a Schmitt Trigger STROBE input. I_{OL} can exceed these conditions provided that no single output sinks more than 5 mA and no more than two outputs exceed the test conditions.
3. Capacitive loading on ports 0 and 2 may cause the V_{OH} on ALE and $\overline{PSEN}$ to momentarily fall below the V_{CC}–0.7 specification when the address bits are stabilizing.
4. Pins of ports 1, 2 and 3 source a transition current when they are being externally driven from 1 to 0. The transition current reaches its maximum value when V_{IN} is approximately 2 V.
5. See Figures 22 through 25 for I_{CC} test conditions.
   Active mode: I_{CC} = 0.9 × FREQ. + 1.1 mA
   Idle mode: I_{CC} = 0.18 × FREQ. +1.01 mA; See Figure 21.
6. This value applies to T_{amb} = 0°C to +70°C. For T_{amb} = –40°C to +85°C, I_{TL} = –750 µA.
7. Load capacitance for port 0, ALE, and $\overline{PSEN}$ = 100 pF, load capacitance for all other outputs = 80 pF.
8. Under steady state (non-transient) conditions, I_{OL} must be externally limited as follows:
   Maximum I_{OL} per port pin: 15 mA (*NOTE: This is 85°C specification.)
   Maximum I_{OL} per 8-bit port: 26 mA
   Maximum total I_{OL} for all outputs: 71 mA
   If I_{OL} exceeds the test condition, V_{OL} may exceed the related specification. Pins are not guaranteed to sink current greater than the listed test conditions.
9. ALE is tested to V_{OH1}, except when ALE is off then V_{OH} is the voltage specification.
10. Pin capacitance is characterized but not tested. Pin capacitance is less than 25 pF.

DC ELECTRICAL CHARACTERISTICS

T_{amb} = 0°C to +70°C or –40°C to +85°C, 33 MHz devices; 5 V ±10%; V_{SS} = 0 V

SYMBOL	PARAMETER	TEST CONDITIONS	LIMITS			UNIT
			MIN	TYP[1]	MAX	
V_{IL}	Input low voltage	4.5 V < V_{CC} < 5.5 V	–0.5		0.2 V_{CC}–0.1	V
V_{IH}	Input high voltage (ports 0, 1, 2, 3, $\overline{EA}$)		0.2 V_{CC}+0.9		V_{CC}+0.5	V
V_{IH1}	Input high voltage, XTAL1, RST		0.7 V_{CC}		V_{CC}+0.5	V
V_{OL}	Output low voltage, ports 1, 2, 3 [8]	V_{CC} = 4.5 V I_{OL} = 1.6mA[2]			0.4	V
V_{OL1}	Output low voltage, port 0, ALE, $\overline{PSEN}$ [7, 8]	V_{CC} = 4.5 V I_{OL} = 3.2mA[2]			0.4	V
V_{OH}	Output high voltage, ports 1, 2, 3 [3]	V_{CC} = 4.5 V I_{OH} = –30µA	V_{CC} – 0.7			V
V_{OH1}	Output high voltage (port 0 in external bus mode), ALE[9], $\overline{PSEN}$[3]	V_{CC} = 4.5 V I_{OH} = –3.2mA	V_{CC} – 0.7			V
I_{IL}	Logical 0 input current, ports 1, 2, 3	V_{IN} = 0.4 V	–1		–50	µA
I_{TL}	Logical 1-to-0 transition current, ports 1, 2, 3[6]	V_{IN} = 2.0 V See note 4			–650	µA
I_{LI}	Input leakage current, port 0	0.45 < V_{IN} < V_{CC} – 0.3			±10	µA
I_{CC}	Power supply current (see Figure 21): Active mode (see Note 5) Idle mode (see Note 5) Power-down mode or clock stopped (see Figure 25 for conditions)	See note 5 T_{amb} = 0°C to 70°C T_{amb} = –40°C to +85°C		 3	 50 75	 µA µA
R_{RST}	Internal reset pull-down resistor		40		225	kΩ
C_{IO}	Pin capacitance[10] (except $\overline{EA}$)				15	pF

NOTES:

1. Typical ratings are not guaranteed. The values listed are at room temperature, 5 V.
2. Capacitive loading on ports 0 and 2 may cause spurious noise to be superimposed on the V_{OL}s of ALE and ports 1 and 3. The noise is due to external bus capacitance discharging into the port 0 and port 2 pins when these pins make 1-to-0 transitions during bus operations. In the worst cases (capacitive loading > 100 pF), the noise pulse on the ALE pin may exceed 0.8 V. In such cases, it may be desirable to qualify ALE with a Schmitt Trigger, or use an address latch with a Schmitt Trigger STROBE input. I_{OL} can exceed these conditions provided that no single output sinks more than 5mA and no more than two outputs exceed the test conditions.
3. Capacitive loading on ports 0 and 2 may cause the V_{OH} on ALE and $\overline{PSEN}$ to momentarily fall below the V_{CC}–0.7 specification when the address bits are stabilizing.
4. Pins of ports 1, 2 and 3 source a transition current when they are being externally driven from 1 to 0. The transition current reaches its maximum value when V_{IN} is approximately 2 V.
5. See Figures 22 through 25 for I_{CC} test conditions.
   Active mode: $I_{CC(MAX)}$ = 0.9 × FREQ. + 1.1 mA
   Idle mode: $I_{CC(MAX)}$ = 0.18 × FREQ. +1.0 mA; See Figure 21.
6. This value applies to T_{amb} = 0°C to +70°C. For T_{amb} = –40°C to +85°C, I_{TL} = –750 µA.
7. Load capacitance for port 0, ALE, and $\overline{PSEN}$ = 100 pF, load capacitance for all other outputs = 80 pF.
8. Under steady state (non-transient) conditions, I_{OL} must be externally limited as follows:
   Maximum I_{OL} per port pin: 15 mA (*NOTE: This is 85°C specification.)
   Maximum I_{OL} per 8-bit port: 26 mA
   Maximum total I_{OL} for all outputs: 71 mA
   If I_{OL} exceeds the test condition, V_{OL} may exceed the related specification. Pins are not guaranteed to sink current greater than the listed test conditions.
9. ALE is tested to V_{OH1}, except when ALE is off then V_{OH} is the voltage specification.
10. Pin capacitance is characterized but not tested. Pin capacitance is less than 25 pF. Pin capacitance of ceramic package is less than 15 pF (except $\overline{EA}$ is 25 pF).

AC ELECTRICAL CHARACTERISTICS

T_{amb} = 0°C to +70°C or –40°C to +85°C, V_{CC} = +2.7 V to +5.5 V, V_{SS} = 0 V[1, 2, 3]

SYMBOL	FIGURE	PARAMETER	16 MHz CLOCK		VARIABLE CLOCK		UNIT
			MIN	MAX	MIN	MAX	
$1/t_{CLCL}$	14	Oscillator frequency[5] Speed versions :S			3.5	16	MHz
t_{LHLL}	14	ALE pulse width	85		$2t_{CLCL}$–40		ns
t_{AVLL}	14	Address valid to ALE low	22		t_{CLCL}–40		ns
t_{LLAX}	14	Address hold after ALE low	32		t_{CLCL}–30		ns
t_{LLIV}	14	ALE low to valid instruction in		150		$4t_{CLCL}$–100	ns
t_{LLPL}	14	ALE low to $\overline{PSEN}$ low	32		t_{CLCL}–30		ns
t_{PLPH}	14	$\overline{PSEN}$ pulse width	142		$3t_{CLCL}$–45		ns
t_{PLIV}	14	$\overline{PSEN}$ low to valid instruction in		82		$3t_{CLCL}$–105	ns
t_{PXIX}	14	Input instruction hold after $\overline{PSEN}$	0		0		ns
t_{PXIZ}	14	Input instruction float after $\overline{PSEN}$		37		t_{CLCL}–25	ns
t_{AVIV} [4]	14	Address to valid instruction in		207		$5t_{CLCL}$–105	ns
t_{PLAZ}	14	$\overline{PSEN}$ low to address float		10		10	ns
Data Memory							
t_{RLRH}	15, 16	$\overline{RD}$ pulse width	275		$6t_{CLCL}$–100		ns
t_{WLWH}	15, 16	$\overline{WR}$ pulse width	275		$6t_{CLCL}$–100		ns
t_{RLDV}	15, 16	$\overline{RD}$ low to valid data in		147		$5t_{CLCL}$–165	ns
t_{RHDX}	15, 16	Data hold after $\overline{RD}$	0		0		ns
t_{RHDZ}	15, 16	Data float after $\overline{RD}$		65		$2t_{CLCL}$–60	ns
t_{LLDV}	15, 16	ALE low to valid data in		350		$8t_{CLCL}$–150	ns
t_{AVDV}	15, 16	Address to valid data in		397		$9t_{CLCL}$–165	ns
t_{LLWL}	15, 16	ALE low to $\overline{RD}$ or $\overline{WR}$ low	137	239	$3t_{CLCL}$–50	$3t_{CLCL}$+50	ns
t_{AVWL}	15, 16	Address valid to $\overline{WR}$ low or $\overline{RD}$ low	122		$4t_{CLCL}$–130		ns
t_{QVWX}	15, 16	Data valid to $\overline{WR}$ transition	13		t_{CLCL}–50		ns
t_{WHQX}	15, 16	Data hold after $\overline{WR}$	13		t_{CLCL}–50		ns
t_{QVWH}	16	Data valid to $\overline{WR}$ high	287		$7t_{CLCL}$–150		ns
t_{RLAZ}	15, 16	$\overline{RD}$ low to address float		0		0	ns
t_{WHLH}	15, 16	$\overline{RD}$ or $\overline{WR}$ high to ALE high	23	103	t_{CLCL}–40	t_{CLCL}+40	ns
External Clock							
t_{CHCX}	18	High time	20		20	t_{CLCL}–t_{CLCX}	ns
t_{CLCX}	18	Low time	20		20	t_{CLCL}–t_{CHCX}	ns
t_{CLCH}	18	Rise time		20		20	ns
t_{CHCL}	18	Fall time		20		20	ns
Shift Register							
t_{XLXL}	17	Serial port clock cycle time	750		$12t_{CLCL}$		ns
t_{QVXH}	17	Output data setup to clock rising edge	492		$10t_{CLCL}$–133		ns
t_{XHQX}	17	Output data hold after clock rising edge	8		$2t_{CLCL}$–117		ns
t_{XHDX}	17	Input data hold after clock rising edge	0		0		ns
t_{XHDV}	17	Clock rising edge to input data valid		492		$10t_{CLCL}$–133	ns

NOTES:
1. Parameters are valid over operating temperature range unless otherwise specified.
2. Load capacitance for port 0, ALE, and $\overline{PSEN}$ = 100 pF, load capacitance for all other outputs = 80 pF.
3. Interfacing the 80C31 and 80C32 to devices with float times up to 45ns is permitted. This limited bus contention will not cause damage to Port 0 drivers.
4. See application note AN457 for external memory interface.
5. Parts are guaranteed to operate down to 0 Hz. When an external clock source is used, the RST pin should be held high for a minimum of 20 µs for power-on or wakeup from power down.

AC ELECTRICAL CHARACTERISTICS

T_{amb} = 0°C to +70°C or –40°C to +85°C, V_{CC} = 5 V ±10%, V_{SS} = 0 V[1, 2, 3]

SYMBOL	FIGURE	PARAMETER	VARIABLE CLOCK[4] 16 MHz to f_{max}		33 MHz CLOCK		UNIT
			MIN	MAX	MIN	MAX	
t_{LHLL}	14	ALE pulse width	$2t_{CLCL}$–40		21		ns
t_{AVLL}	14	Address valid to ALE low	t_{CLCL}–25		5		ns
t_{LLAX}	14	Address hold after ALE low	t_{CLCL}–25				ns
t_{LLIV}	14	ALE low to valid instruction in		$4t_{CLCL}$–65		55	ns
t_{LLPL}	14	ALE low to $\overline{PSEN}$ low	t_{CLCL}–25		5		ns
t_{PLPH}	14	$\overline{PSEN}$ pulse width	$3t_{CLCL}$–45		45		ns
t_{PLIV}	14	$\overline{PSEN}$ low to valid instruction in		$3t_{CLCL}$–60		30	ns
t_{PXIX}	14	Input instruction hold after $\overline{PSEN}$	0		0		ns
t_{PXIZ}	14	Input instruction float after $\overline{PSEN}$		t_{CLCL}–25		5	ns
t_{AVIV}	14	Address to valid instruction in		$5t_{CLCL}$–80		70	ns
t_{PLAZ}	14	$\overline{PSEN}$ low to address float		10		10	ns
Data Memory							
t_{RLRH}	15, 16	$\overline{RD}$ pulse width	$6t_{CLCL}$–100		82		ns
t_{WLWH}	15, 16	$\overline{WR}$ pulse width	$6t_{CLCL}$–100		82		ns
t_{RLDV}	15, 16	$\overline{RD}$ low to valid data in		$5t_{CLCL}$–90		60	ns
t_{RHDX}	15, 16	Data hold after $\overline{RD}$	0		0		ns
t_{RHDZ}	15, 16	Data float after $\overline{RD}$		$2t_{CLCL}$–28		32	ns
t_{LLDV}	15, 16	ALE low to valid data in		$8t_{CLCL}$–150		90	ns
t_{AVDV}	15, 16	Address to valid data in		$9t_{CLCL}$–165		105	ns
t_{LLWL}	15, 16	ALE low to $\overline{RD}$ or $\overline{WR}$ low	$3t_{CLCL}$–50	$3t_{CLCL}$+50	40	140	ns
t_{AVWL}	15, 16	Address valid to $\overline{WR}$ low or $\overline{RD}$ low	$4t_{CLCL}$–75		45		ns
t_{QVWX}	15, 16	Data valid to $\overline{WR}$ transition	t_{CLCL}–30		0		ns
t_{WHQX}	15, 16	Data hold after $\overline{WR}$	t_{CLCL}–25		5		ns
t_{QVWH}	16	Data valid to $\overline{WR}$ high	$7t_{CLCL}$–130		80		ns
t_{RLAZ}	15, 16	$\overline{RD}$ low to address float		0		0	ns
t_{WHLH}	15, 16	$\overline{RD}$ or $\overline{WR}$ high to ALE high	t_{CLCL}–25	t_{CLCL}+25	5	55	ns
External Clock							
t_{CHCX}	18	High time	$0.38t_{CLCL}$	t_{CLCL}–t_{CLCX}			ns
t_{CLCX}	18	Low time	$0.38t_{CLCL}$	t_{CLCL}–t_{CHCX}			ns
t_{CLCH}	18	Rise time		5			ns
t_{CHCL}	18	Fall time		5			ns
Shift Register							
t_{XLXL}	17	Serial port clock cycle time	$12t_{CLCL}$		360		ns
t_{QVXH}	17	Output data setup to clock rising edge	$10t_{CLCL}$–133		167		ns
t_{XHQX}	17	Output data hold after clock rising edge	$2t_{CLCL}$–80				ns
t_{XHDX}	17	Input data hold after clock rising edge	0		0		ns
t_{XHDV}	17	Clock rising edge to input data valid		$10t_{CLCL}$–133		167	ns

NOTES:
1. Parameters are valid over operating temperature range unless otherwise specified.
2. Load capacitance for port 0, ALE, and $\overline{PSEN}$ = 100 pF, load capacitance for all other outputs = 80 pF.
3. Interfacing the 80C31 and 80C32 to devices with float times up to 45ns is permitted. This limited bus contention will not cause damage to Port 0 drivers.
4. Variable clock is specified for oscillator frequencies greater than 16 MHz to 33 MHz. For frequencies equal or less than 16 MHz, see 16 MHz "AC Electrical Characteristics", page 23.
5. Parts are guaranteed to operate down to 0 Hz. When an external clock source is used, the RST pin should be held high for a minimum of 20 µs for power-on or wakeup from power down.

EXPLANATION OF THE AC SYMBOLS

Each timing symbol has five characters. The first character is always 't' (= time). The other characters, depending on their positions, indicate the name of a signal or the logical status of that signal. The designations are:

A – Address
C – Clock
D – Input data
H – Logic level high
I – Instruction (program memory contents)
L – Logic level low, or ALE
P – $\overline{PSEN}$
Q – Output data
R – $\overline{RD}$ signal
t – Time
V – Valid
W – $\overline{WR}$ signal
X – No longer a valid logic level
Z – Float

Examples: t_{AVLL} = Time for address valid to ALE low.
t_{LLPL} =Time for ALE low to $\overline{PSEN}$ low.

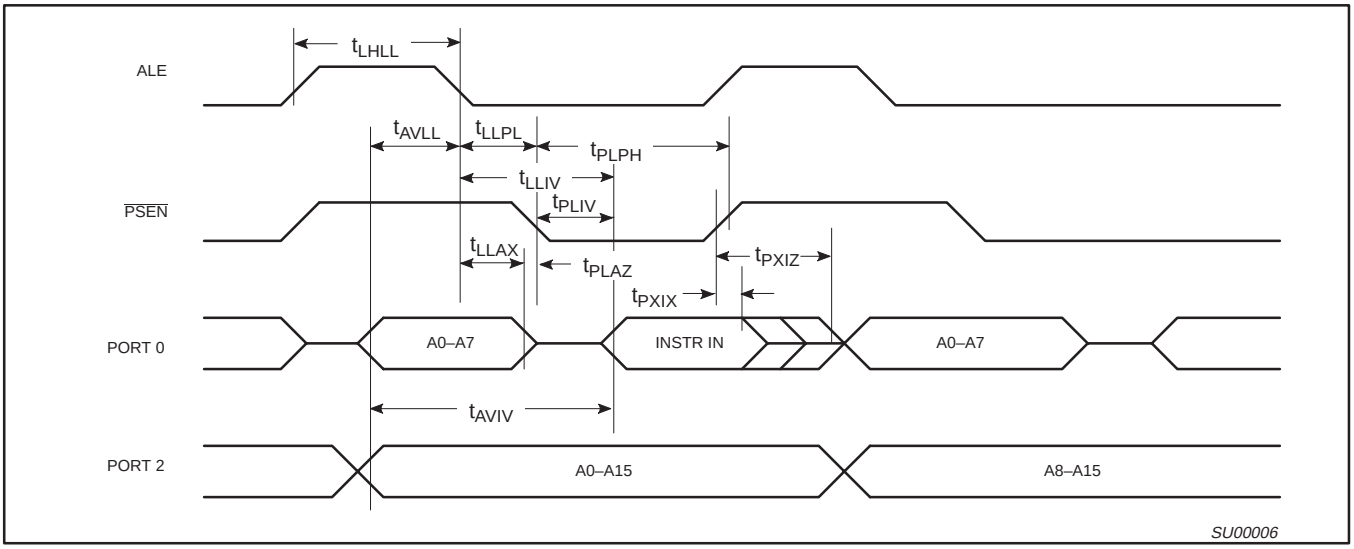

Figure 14. External Program Memory Read Cycle

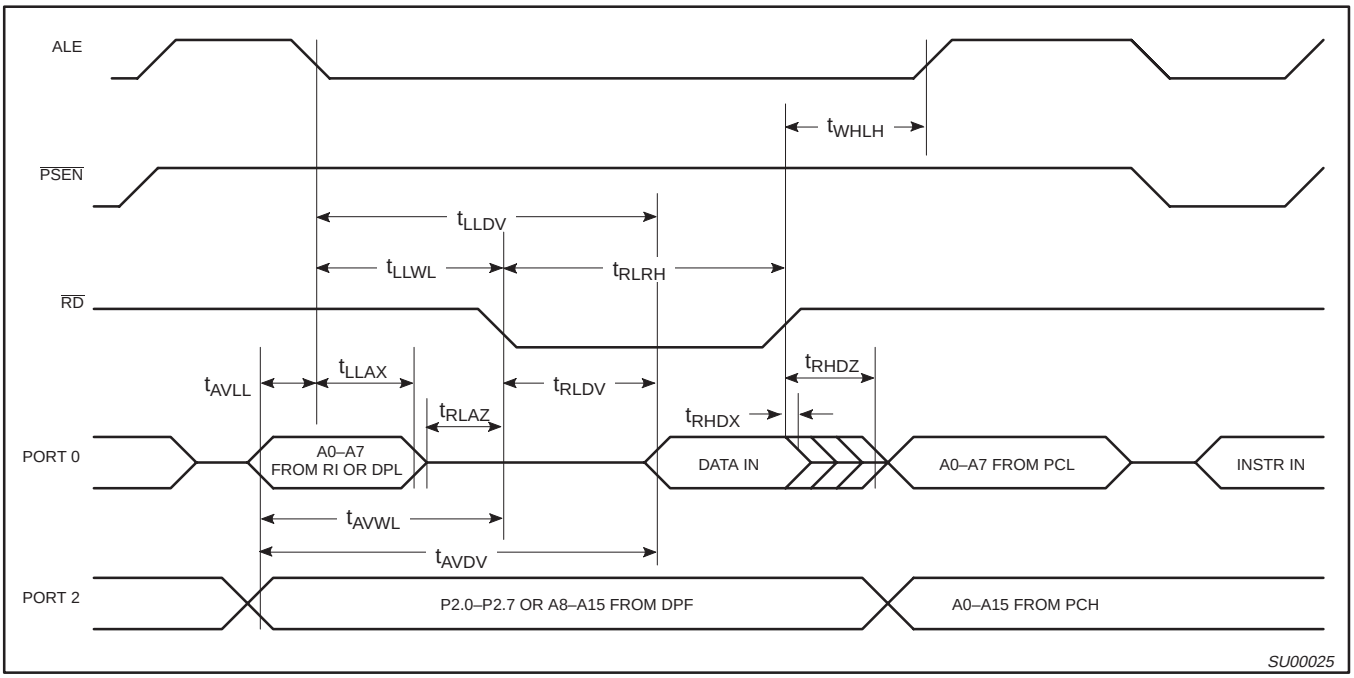

Figure 15. External Data Memory Read Cycle

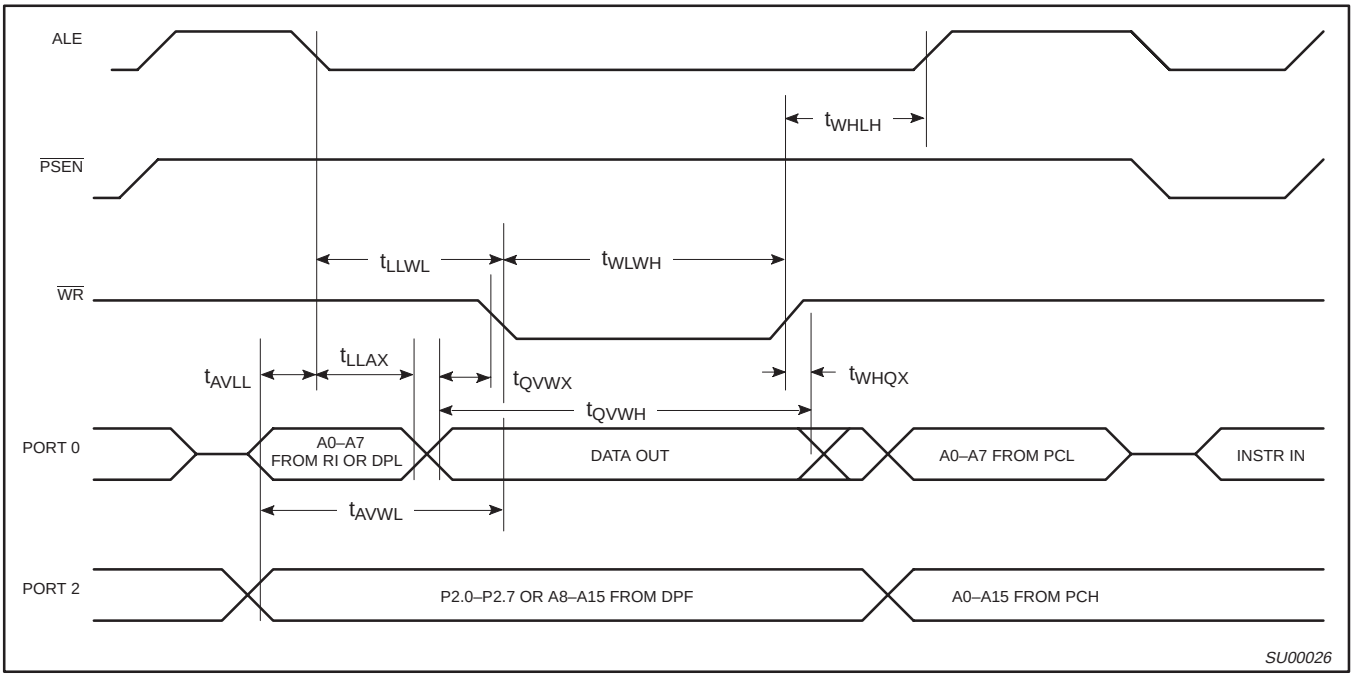

Figure 16. External Data Memory Write Cycle

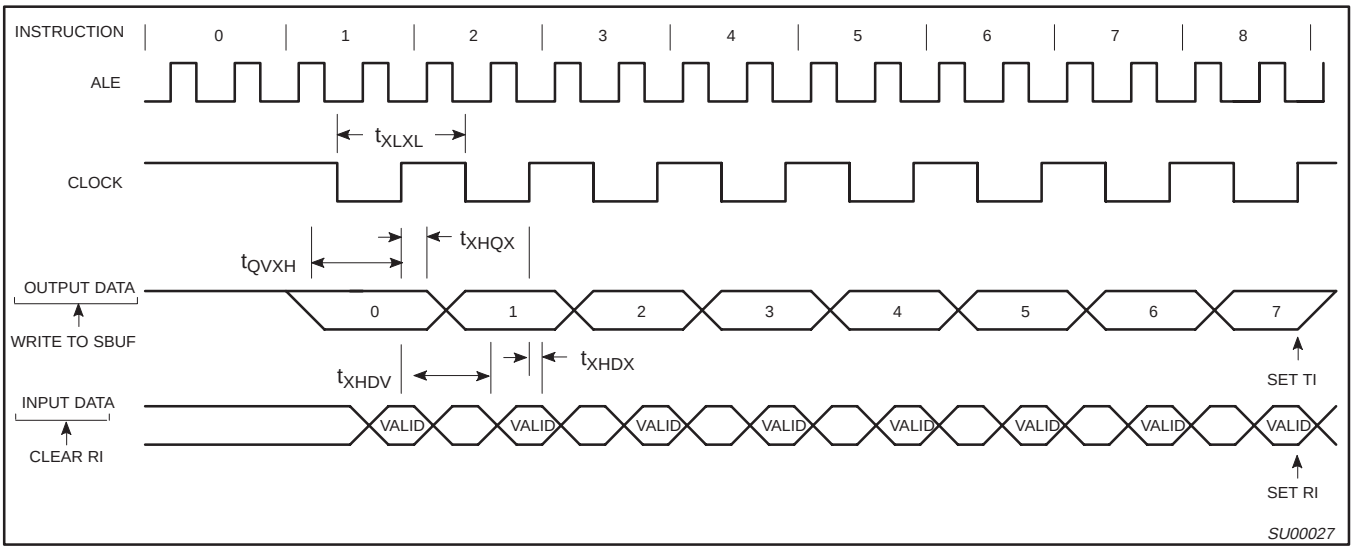

Figure 17. Shift Register Mode Timing

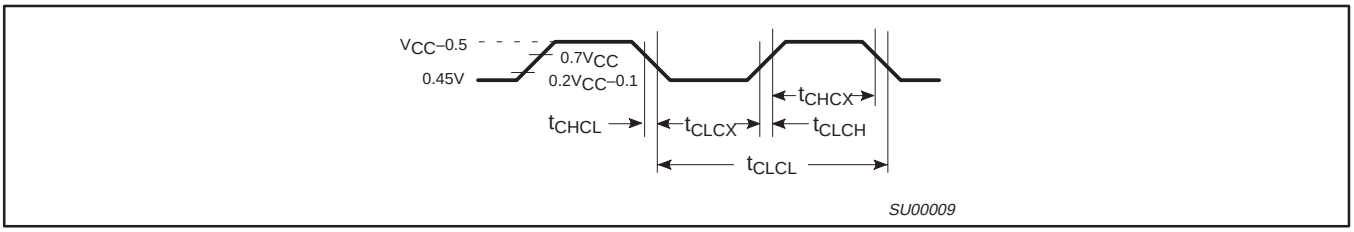

Figure 18. External Clock Drive

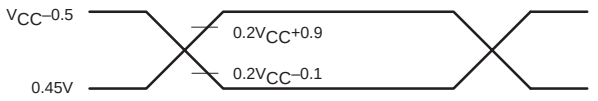

NOTE:
AC inputs during testing are driven at V_{CC} –0.5 for a logic '1' and 0.45V for a logic '0'. Timing measurements are made at V_{IH} min for a logic '1' and V_{IL} max for a logic '0'.

SU00717

Figure 19. AC Testing Input/Output

NOTE:
For timing purposes, a port is no longer floating when a 100mV change from load voltage occurs, and begins to float when a 100mV change from the loaded V_{OH}/V_{OL} level occurs. $I_{OH}/I_{OL} \geq \pm 20$mA.

SU00718

Figure 20. Float Waveform

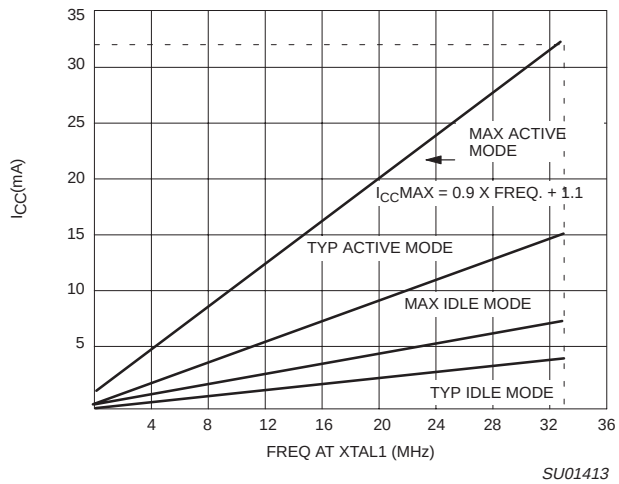

SU01413

Figure 21. I_{CC} vs. FREQ
Valid only within frequency specifications of the device under test

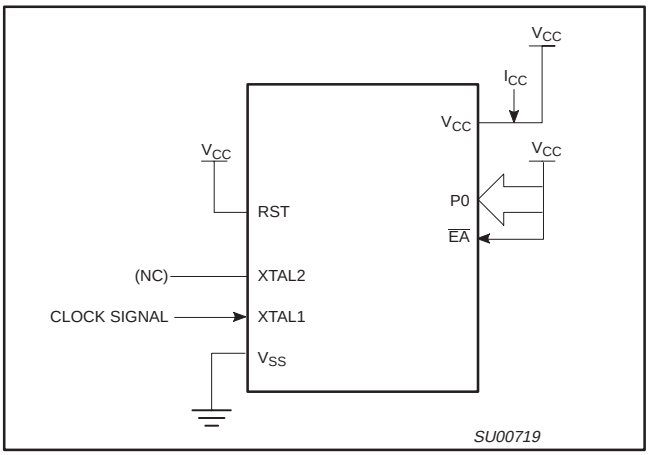

Figure 22. I_{CC} Test Condition, Active Mode
All other pins are disconnected

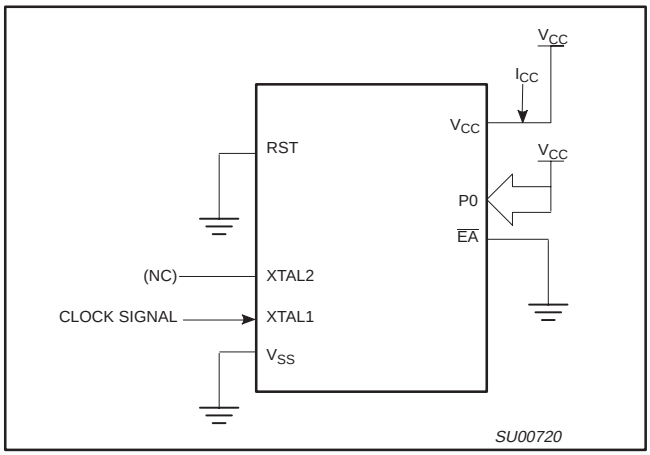

Figure 23. I_{CC} Test Condition, Idle Mode
All other pins are disconnected

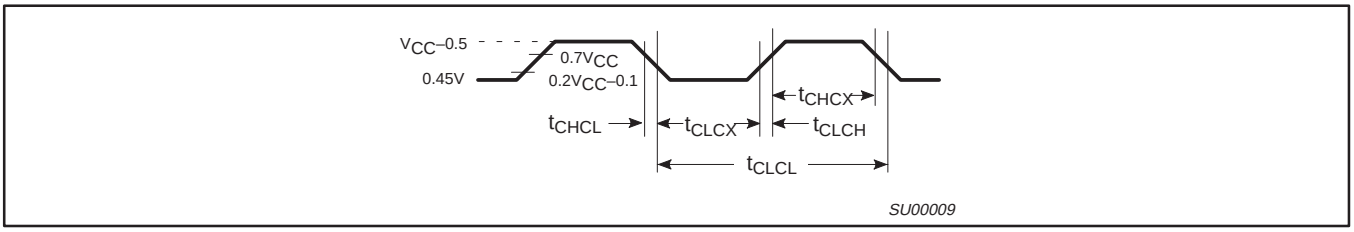

Figure 24. Clock Signal Waveform for I_{CC} Tests in Active and Idle Modes
$t_{CLCH} = t_{CHCL} = 5ns$

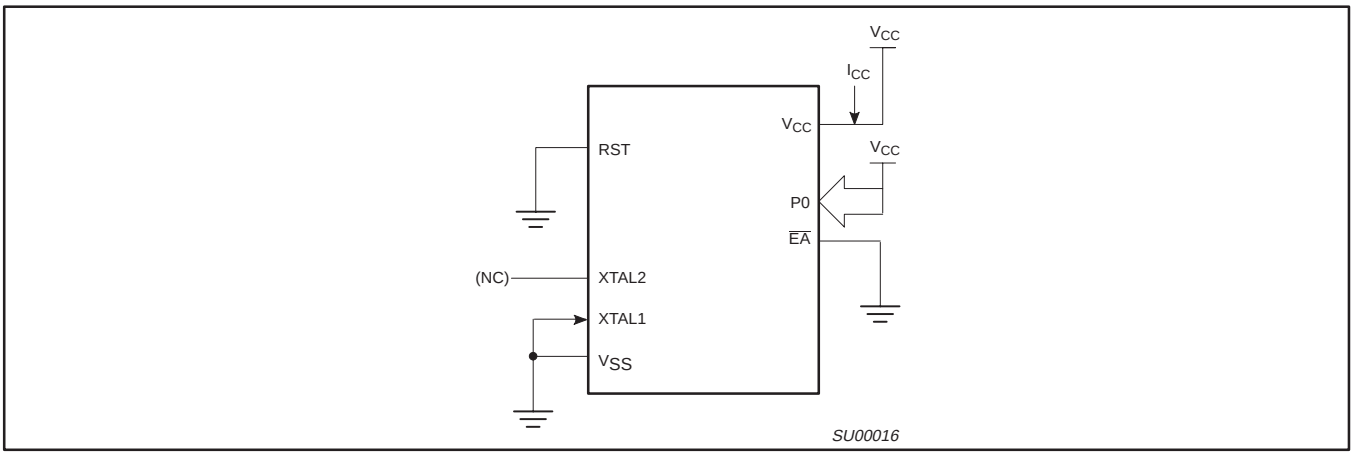

Figure 25. I_{CC} Test Condition, Power Down Mode
All other pins are disconnected. V_{CC} = 2 V to 5.5 V

DIP40: plastic dual in-line package; 40 leads (600 mil) SOT129-1

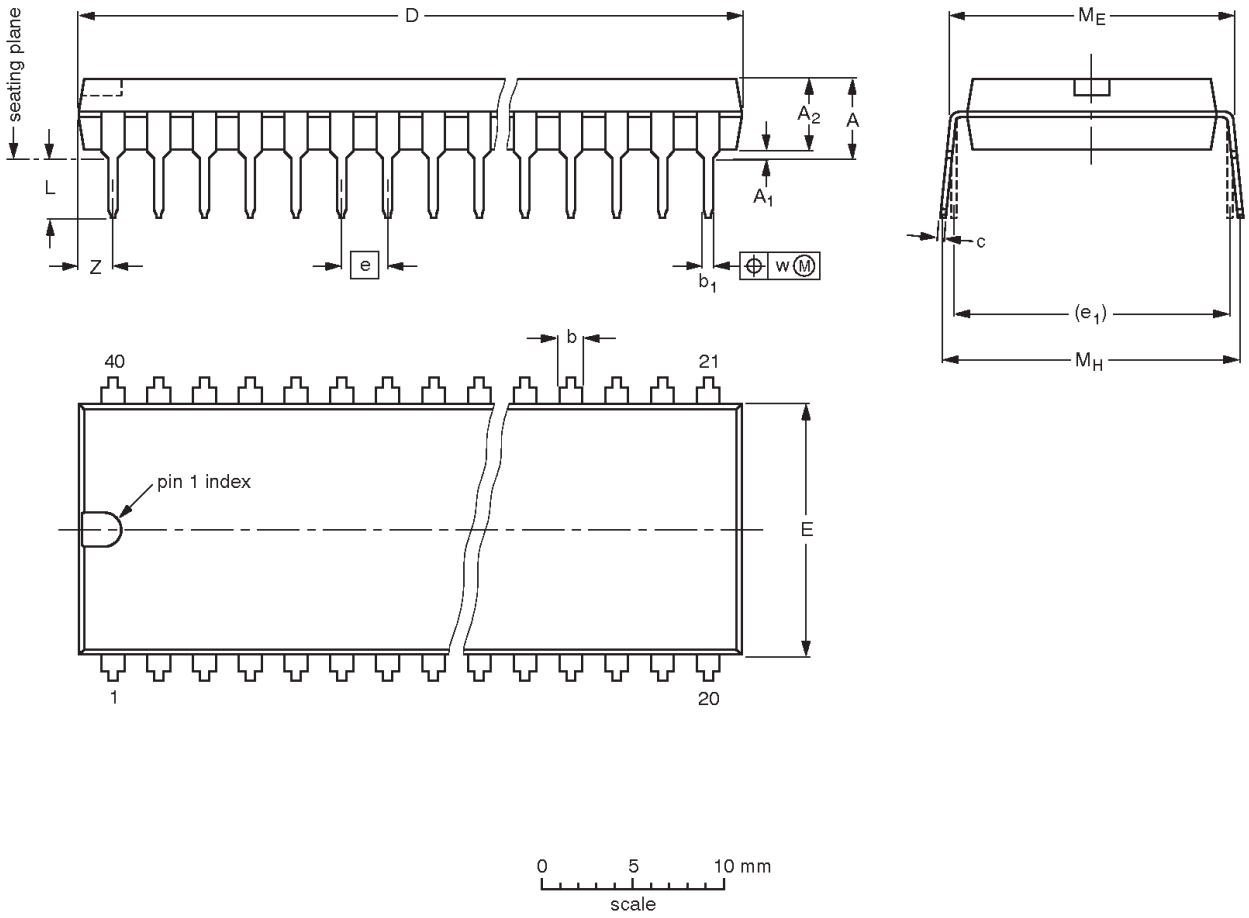

DIMENSIONS (inch dimensions are derived from the original mm dimensions)

UNIT	A max.	A_1 min.	A_2 max.	b	b_1	c	D (1)	E (1)	e	e_1	L	M_E	M_H	w	Z (1) max.
mm	4.7	0.51	4.0	1.70 1.14	0.53 0.38	0.36 0.23	52.50 51.50	14.1 13.7	2.54	15.24	3.60 3.05	15.80 15.24	17.42 15.90	0.254	2.25
inches	0.19	0.020	0.16	0.067 0.045	0.021 0.015	0.014 0.009	2.067 2.028	0.56 0.54	0.10	0.60	0.14 0.12	0.62 0.60	0.69 0.63	0.01	0.089

Note

1. Plastic or metal protrusions of 0.25 mm maximum per side are not included.

OUTLINE VERSION	REFERENCES				EUROPEAN PROJECTION	ISSUE DATE
	IEC	JEDEC	EIAJ			
SOT129-1	051G08	MO-015	SC-511-40			~~95-01-14~~ 99-12-27

PLCC44: plastic leaded chip carrier; 44 leads SOT187-2

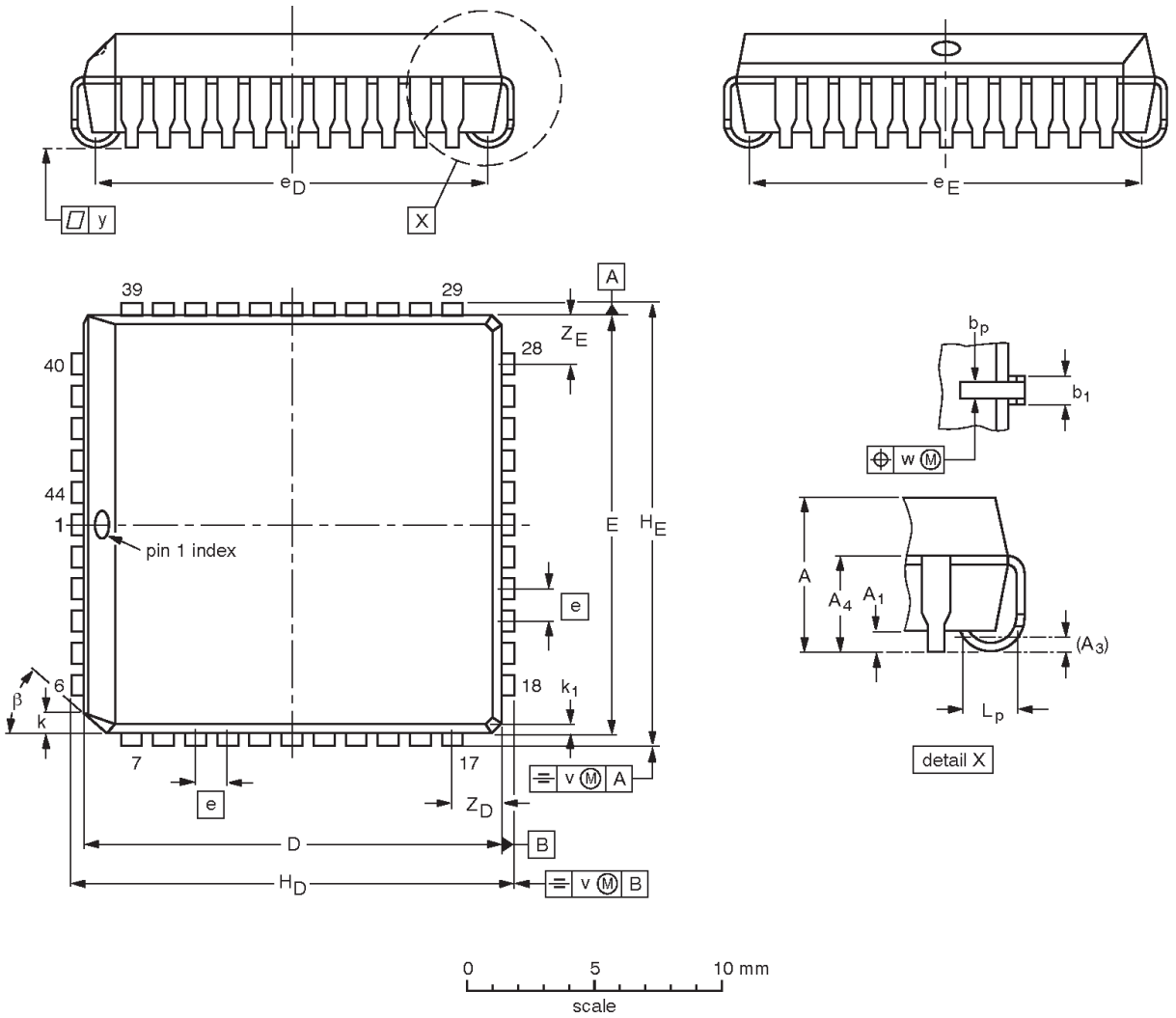

DIMENSIONS (millimetre dimensions are derived from the original inch dimensions)

UNIT	A	A_1 min.	A_3	A_4 max.	b_p	b_1	D(1)	E(1)	e	e_D	e_E	H_D	H_E	k	k_1 max.	L_p	v	w	y	Z_D(1) max.	Z_E(1) max.	β
mm	4.57 4.19	0.51	0.25	3.05	0.53 0.33	0.81 0.66	16.66 16.51	16.66 16.51	1.27	16.00 14.99	16.00 14.99	17.65 17.40	17.65 17.40	1.22 1.07	0.51	1.44 1.02	0.18	0.18	0.10	2.16	2.16	45°
inches	0.180 0.165	0.020	0.01	0.12	0.021 0.013	0.032 0.026	0.656 0.650	0.656 0.650	0.05	0.630 0.590	0.630 0.590	0.695 0.685	0.695 0.685	0.048 0.042	0.020	0.057 0.040	0.007	0.007	0.004	0.085	0.085	

Note

1. Plastic or metal protrusions of 0.01 inches maximum per side are not included.

OUTLINE VERSION	REFERENCES				EUROPEAN PROJECTION	ISSUE DATE
	IEC	JEDEC	EIAJ			
SOT187-2	112E10	MO-047				~~97-12-16~~ 99-12-27

QFP44: plastic quad flat package; 44 leads (lead length 1.3 mm); body 10 x 10 x 1.75 mm SOT307-2

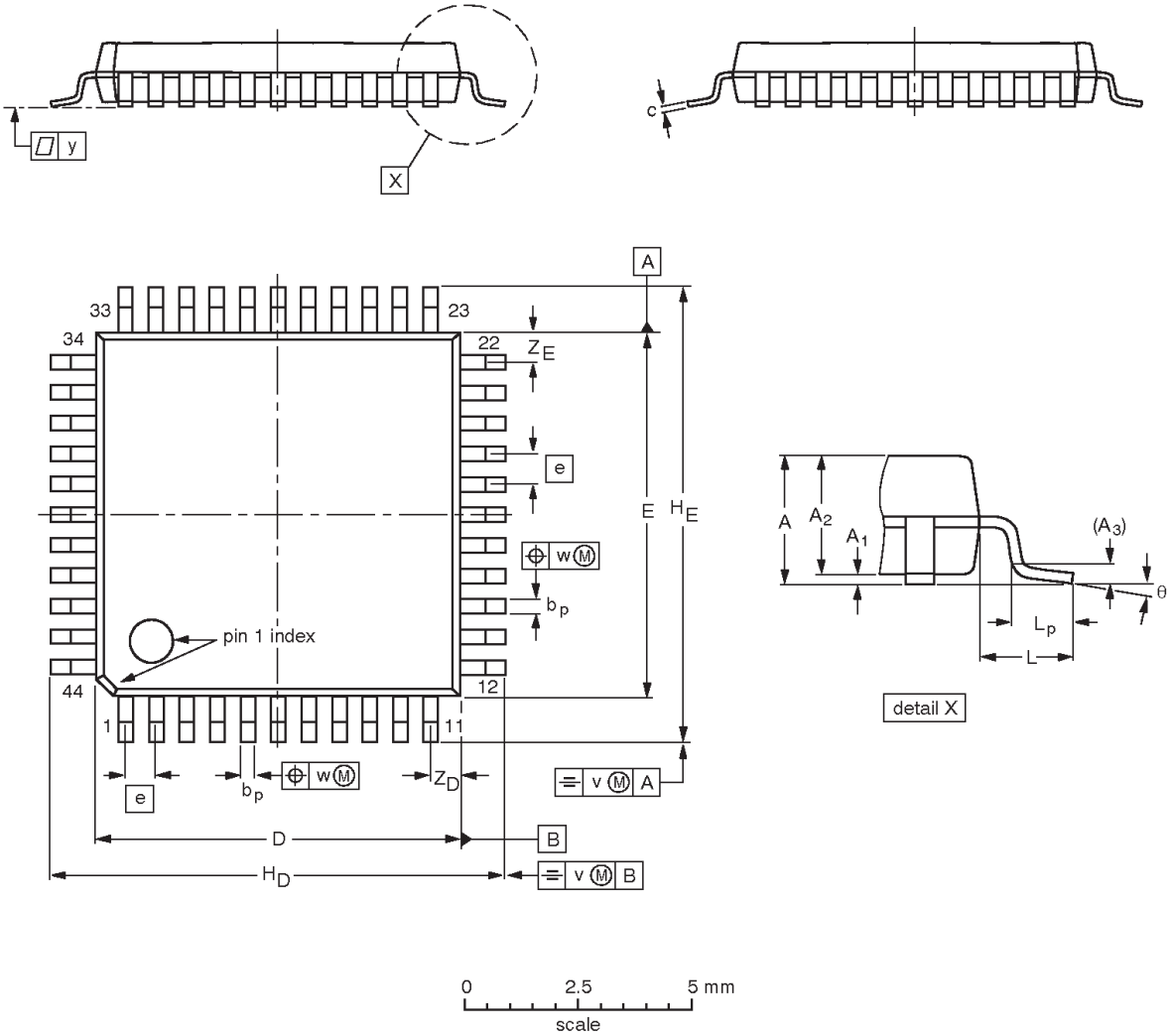

DIMENSIONS (mm are the original dimensions)

UNIT	A max.	A_1	A_2	A_3	b_p	c	D(1)	E(1)	e	H_D	H_E	L	L_p	v	w	y	Z_D(1)	Z_E(1)	θ
mm	2.10	0.25 0.05	1.85 1.65	0.25	0.40 0.20	0.25 0.14	10.1 9.9	10.1 9.9	0.8	12.9 12.3	12.9 12.3	1.3	0.95 0.55	0.15	0.15	0.1	1.2 0.8	1.2 0.8	10° 0°

Note

1. Plastic or metal protrusions of 0.25 mm maximum per side are not included.

OUTLINE VERSION	REFERENCES				EUROPEAN PROJECTION	ISSUE DATE
	IEC	JEDEC	EIAJ			
SOT307-2						~~95-02-04~~ 97-08-01

Data sheet status

Data sheet status	Product status	Definition [1]
Objective specification	Development	This data sheet contains the design target or goal specifications for product development. Specification may change in any manner without notice.
Preliminary specification	Qualification	This data sheet contains preliminary data, and supplementary data will be published at a later date. Philips Semiconductors reserves the right to make changes at any time without notice in order to improve design and supply the best possible product.
Product specification	Production	This data sheet contains final specifications. Philips Semiconductors reserves the right to make changes at any time without notice in order to improve design and supply the best possible product.

[1] Please consult the most recently issued datasheet before initiating or completing a design.

Definitions

Short-form specification — The data in a short-form specification is extracted from a full data sheet with the same type number and title. For detailed information see the relevant data sheet or data handbook.

Limiting values definition — Limiting values given are in accordance with the Absolute Maximum Rating System (IEC 134). Stress above one or more of the limiting values may cause permanent damage to the device. These are stress ratings only and operation of the device at these or at any other conditions above those given in the Characteristics sections of the specification is not implied. Exposure to limiting values for extended periods may affect device reliability.

Application information — Applications that are described herein for any of these products are for illustrative purposes only. Philips Semiconductors make no representation or warranty that such applications will be suitable for the specified use without further testing or modification.

Disclaimers

Life support — These products are not designed for use in life support appliances, devices or systems where malfunction of these products can reasonably be expected to result in personal injury. Philips Semiconductors customers using or selling these products for use in such applications do so at their own risk and agree to fully indemnify Philips Semiconductors for any damages resulting from such application.

Right to make changes — Philips Semiconductors reserves the right to make changes, without notice, in the products, including circuits, standard cells, and/or software, described or contained herein in order to improve design and/or performance. Philips Semiconductors assumes no responsibility or liability for the use of any of these products, conveys no license or title under any patent, copyright, or mask work right to these products, and makes no representations or warranties that these products are free from patent, copyright, or mask work right infringement, unless otherwise specified.

Philips Semiconductors
811 East Arques Avenue
P.O. Box 3409
Sunnyvale, California 94088–3409
Telephone 800-234-7381

© Copyright Philips Electronics North America Corporation 2000
All rights reserved. Printed in U.S.A.

Date of release: 08-00

Document order number: 9397 750 07403

Let's make things better.

Philips Semiconductors

PHILIPS

Mouser Electronics

Authorized Distributor

Click to View Pricing, Inventory, Delivery & Lifecycle Information:

NXP:
P80C32UBPN