DESCRIPTION: M12 5 POSITION BRASS MALE PIGTAIL

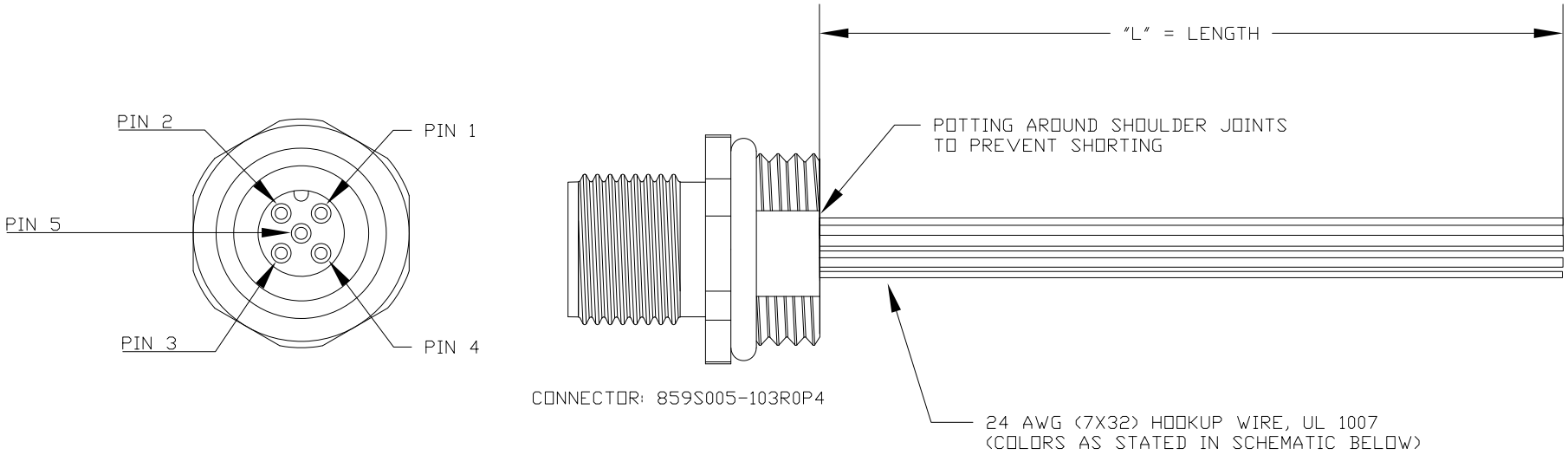

**SEE PAGE 2 FOR DETAILS

WIRING SCHEMATIC

1	2
PIN	PIN
1 = BROWN	1 = RED
2 = WHITE	2 = GREEN
3 = BLUE	3 = BLACK
4 = BLACK	4 = WHITE
5 = GREY	5 = GREY

MPM12A05IYYAF0Y

INCHES

LENGTH
EX: 06 = 6 INCHES
12 = 12 INCHES

01 = WIRING SCHEMATIC 1
02 = WIRING SCHEMATIC 2

NOTE: PACKAGED 10 PER BAG

RoHS COMPLIANT

UNITS IN INCHES [MM] DO NOT SCALE FROM DRAWING

THESE DRAWINGS AND SPECIFICATIONS ARE THE PROPERTY OF NorComp AND SHALL NOT BE REPRODUCED, COPIED OR USED AS THE BASIS FOR THE MANUFACTURE OR SALE OF APPARATUS WITHOUT WRITTEN PERMISSION.

DRAWN: G. BROWN	NorComp	SCALE: NTS	SHEET 1 OF 2	REV 2
DATE: 01/23/2019		DWG NO. MPM12A05IYYAF0Y		

DESCRIPTION: M12 5 POSITION BRASS MALE PIGTAIL

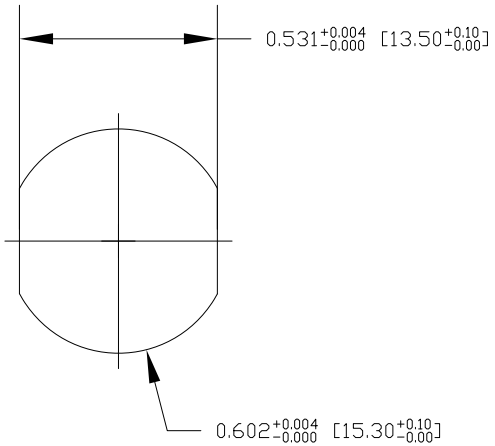

RECOMMENDED PANEL CUT-OUT

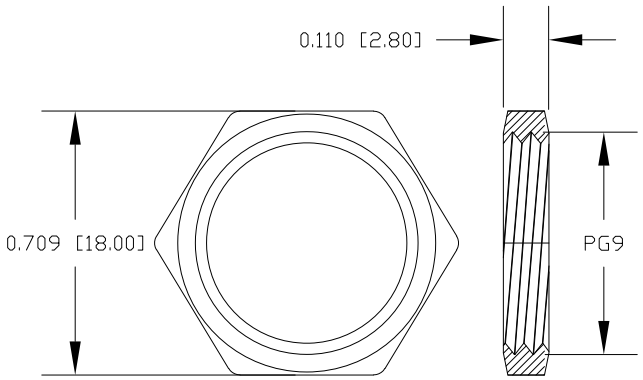

NUT

NOTE:

MATERIAL	
HOUSING:	PBT UL94V-0, BLACK
CONTACT:	BRASS
NUT:	BRASS
SHELL:	BRASS
O-RING:	EPDM, BLACK
FINISH	
CONTACT:	GOLD PLATED, 10μ" Min.
UNDER PLATE:	NICKEL
NUT:	NICKEL PLATED
SHELL:	NICKEL PLATED
ELECTRICAL	
RATED CURRENT:	4A
RATED VOLTAGE:	60V
INSULATION RESISTANCE:	100MΩ MIN
CONTACT RESISTANCE:	10mΩ MAX
WATER PROOF:	IP67/68
ENVIRONMENT	
OPERATION TEMPERATURE:	-40°C ~ +85°C

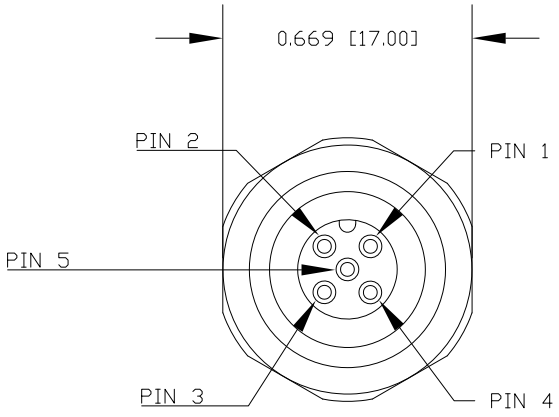

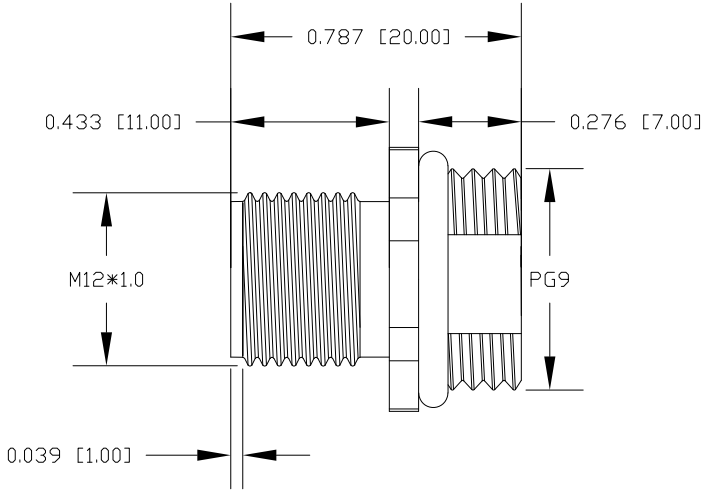

RoHS COMPLIANT

UNITS IN INCHES [MM] DO NOT SCALE FROM DRAWING

THESE DRAWINGS AND SPECIFICATIONS ARE THE PROPERTY OF NorComp AND SHALL NOT BE REPRODUCED, COPIED OR USED AS THE BASIS FOR THE MANUFACTURE OR SALE OF APPARATUS WITHOUT WRITTEN PERMISSION.

DRAWN: G. BROWN	NorComp	SCALE: NTS	SHEET 2 OF 2	REV 2
DATE: 01/23/2019		DWG NO. MPM12A05IYYAF0Y	

Mouser Electronics

Authorized Distributor

Click to View Pricing, Inventory, Delivery & Lifecycle Information:

NorComp:

MPM12A05I06AF01 MPM12A05I06AF02 MPM12A05I12AF01 MPM12A05I12AF02