DESCRIPTION: DSUB IP67 FLANGE // MALE // COMBO // VERTICAL PIN PCB MOUNT

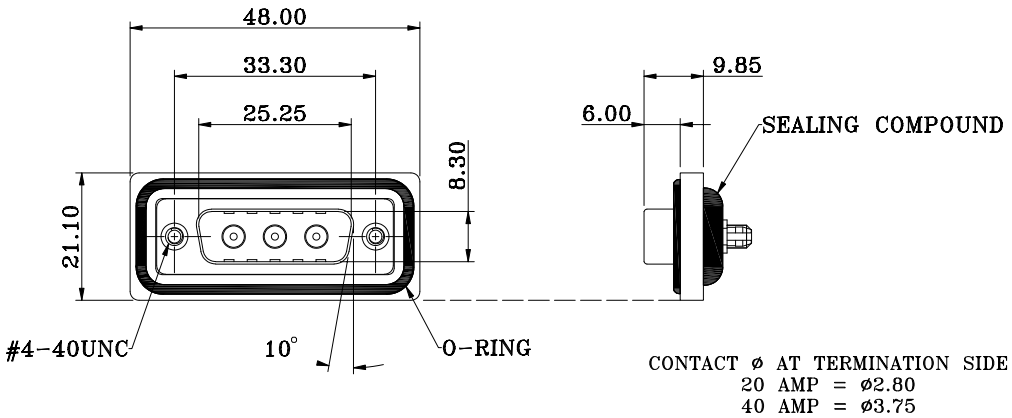

NOTE:

MATERIAL	
HOUSING	PBT UL94V-0, BLACK
FLANGE	PBT UL94V-0, BLACK
CONTACT	BRASS, PLATING P/N KEY BELOW
SHELL	STEEL, NICKEL
O-RING	SILICONE
SEALING COMPOUND	EPOXY
HARDWARE	BRASS; NICKEL PLATED
ELECTRICAL	
POWER CONTACT RATED CURRENT	P/N KEY BELOW
VOLTAGE	1000 VAC 1 MIN
INSULATOR RESISTANCE	5 GOhms MIN.
POWER CONTACT RESISTANCE	2.0 mOhms MAX.
WATER PROOF	IP67
ENVIRONMENT	
OPERATION TEMPERATURE	-25°C TO +85°C

HARDWARE OPTIONS

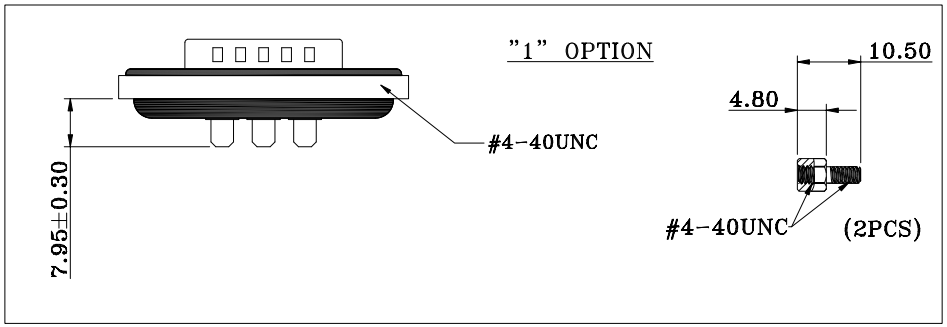

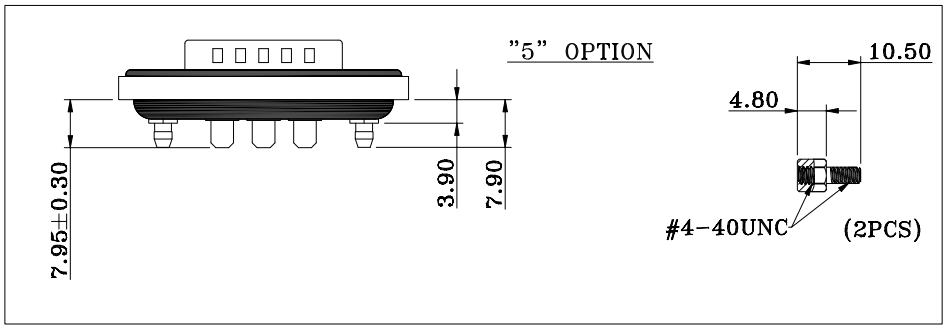

CDFV3W3113LYYY

SERIES
- CDF = COMBO DSUB FLANGE

CONTACT TYPE
- V = VERTICAL PCB MOUNT

POSITION
- 3W3

GENDER
- 1 = MALE

POWER CONTACT AMPERAGE
- 2 = 20 AMPS
- 4 = 40 AMPS

HARDWARE OPTIONS
- 1 = 4-40 THREADED INSERTS/4-40 JACKSCREWS
- 5 = 4-40 THREADED BOARD LOCKS & 4-40 JACKSCREWS

CONTACT PLATING OPTIONS
- 1 = GOLD FLASH
- 2 = 30u" GOLD PLATING

RoHS COMPLIANT

UNITS = mm

DO NOT SCALE FROM DRAWING

THESE DRAWINGS AND SPECIFICATIONS ARE THE PROPERTY OF NorComp AND SHALL NOT BE REPRODUCED, COPIED OR USED AS THE BASIS FOR THE MANUFACTURE OR SALE OF APPARATUS WITHOUT WRITTEN PERMISSION.

DRAWN: J. KADEL

DATE: 04/07/2020

TOLERANCES
X. ±0.40
.X ±0.30
.XX ±0.20
.XXX ±0.10

NorComp

SCALE: NTS

SHEET 1 OF 2

REV 1

DWG NO. CDFV3W3113LYYY

DESCRIPTION: DSUB IP67 FLANGE // MALE // COMBO // VERTICAL PIN PCB MOUNT

**ø3.20MM HOLES NOT NEEDED FOR "1" HARDWARE OPTION

20 AMP CONFIGURATION

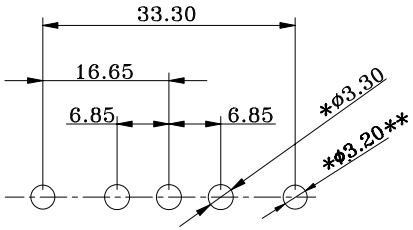

40 AMP CONFIGURATION

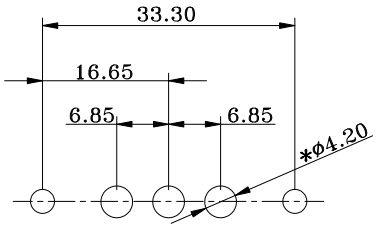

RECOMMENDED PCB LAYOUT
*TYPICAL // HOLE SIZE MAY NOT BE SUITABLE FOR YOUR SPECIFIC APPLICATION

RoHS COMPLIANT

UNITS = mm

DO NOT SCALE FROM DRAWING

THESE DRAWINGS AND SPECIFICATIONS ARE THE PROPERTY OF NorComp AND SHALL NOT BE REPRODUCED, COPIED OR USED AS THE BASIS FOR THE MANUFACTURE OR SALE OF APPARATUS WITHOUT WRITTEN PERMISSION.

DRAWN: J. KADEL

DATE: 04/07/2020

TOLERANCES
X. ±0.40
.X ±0.30
.XX ±0.20
.XXX ±0.10

NorComp

SCALE: NTS

SHEET 2 OF 2

REV 1

DWG NO. CDFV3W3113LYYY

Mouser Electronics

Authorized Distributor

Click to View Pricing, Inventory, Delivery & Lifecycle Information:

NorComp:

CDFV3W3213L412 CDFV3W3113L212 CDFV3W3113L412 CDFV3W3113L411 CDFV3W3213L211 CDFV3W3113L251 CDFV3W3213L452 CDFV3W3113L252 CDFV3W3113L452 CDFV3W3113L451 CDFV3W3213L411 CDFV3W3213L212 CDFV3W3213L251 CDFV3W3213L252 CDFV3W3113L211 CDFV3W3213L451