MODEL NUMBER
55BRCX-520-J5A

REVISIONS					
REV	ECO	DESCRIPTION	DATE	BY	CHECKED
-	-	NEW DRAWING	9/2/2011	TSM	MCP
000	100077	SEE ECO	4/16/2012	TSM	MCP

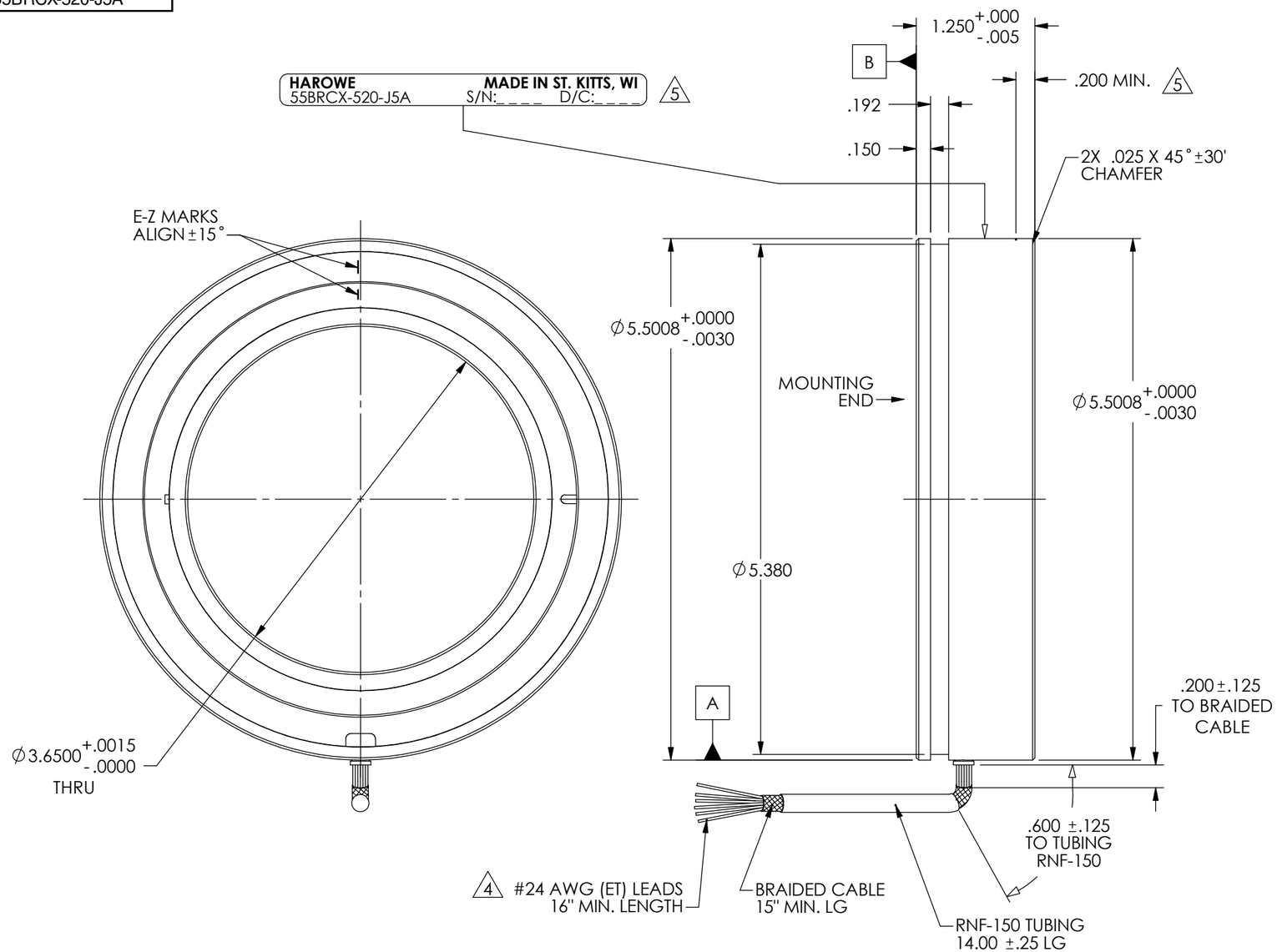

NOTES:

1. MATCHED SET - DO NOT ISSUE SEPARATELY.
2. ROTOR AND STATOR TO BE ALIGNED WITH DATUM 'B' ±.015
3. CUSTOMER MUST MAINTAIN SHAFT RUNOUT WITH RESPECT TO DATUM 'A' WITHIN .003 T.I.R.

4 LEADS TO BE TWISTED PAIRS COVERED WITH A SINGLE TIN PLATED TUBULAR BRAID AND HEAT SHRINKABLE RNF-150 TUBING.

5 NAMEPLATE MUST NOT BE WITHIN MINIMUM DIMENSION SHOWN

ELECTRICAL & MECHANICAL DATA AT 25°C		
VALUES ARE REFERENCE UNLESS OTHERWISE TOLERANCED HIPOT TESTING PERFORMED AT 60HZ, 4 SECOND DURATION		
ELEC CYC / MECH CYC	deg/deg	1
EXCITATION FREQUENCY	±1% kHz	7.0
INPUT VOLTAGE	±5% Vrms	4.25
INPUT CURRENT	Max. mArms	55
INPUT POWER	Watts	.15
IMPEDANCE ZRO	Ohms	91
IMPEDANCE ZRS	Ohms	86
IMPEDANCE ZSO	Ohms	468
IMPEDANCE ZSS	Ohms	445
TRANSFORMATION RATIO	±5%	.47
DC RESISTANCE (R1-R2)	±15% Ohms	39
DC RESISTANCE (S1-S3, S2-S4)	±15% Ohms	54
ERROR	Max. arcminutes	±30
PK-PK ERROR	Max. arcminutes	-
PK-PK VELOCITY RIPPLE ERROR	Max. %	-
PHASE SHIFT, OPEN CIRCUIT	±3 degrees	+4
NULL VOLTAGE	Max. mVrms	30
HIPOT, LEADS TO CASE, 500VAC	Max. mArms	2
HIPOT, INTERPHASE, 250VAC	Max. mArms	2
TEMPERATURE RANGE	°C	-55 TO +125
ROTOR MOMENT OF INERTIA	oz-in-sec^2	.26
WEIGHT	lbs	3.3

PHASING EQUATION

INCREASING ANGLE FOR CCW ROTATION AS VIEWED FROM MOUNTING END

$E\ (S1\text{-}S3) = KE\ (R1\text{-}R2)\ \cos\phi$
$E\ (S2\text{-}S4) = -KE\ (R1\text{-}R2)\ \sin\phi$

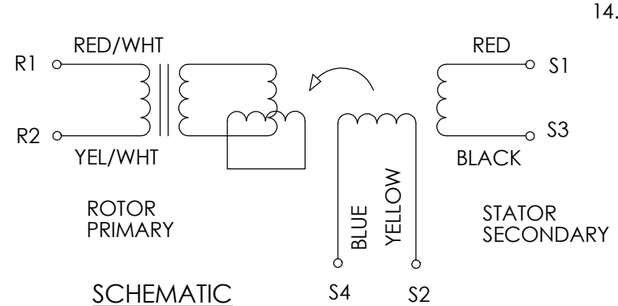

SCHEMATIC

THIRD ANGLE PROJECTION

UNLESS OTHERWISE SPECIFIED:
DIMENSIONS ARE IN INCHES
SHARP EDGES BROKEN .005/.010
INSIDE CORNERS R .015 MAX
TOLERANCES:
DECIMAL .00 ±.01 .000 ±.005
ANGLE ±0.5°
CHAMFER ANGLE ±10°
INTERPRETATION PER ASME Y14.5M-1994

THE INFORMATION CONTAINED IN THIS DRAWING IS THE SOLE PROPERTY OF HAROWE. ANY REPRODUCTION IN PART OR WHOLE WITHOUT THE WRITTEN PERMISSION OF HAROWE IS PROHIBITED.

APPROVALS	DATE
DRAWN TSM	09/02/11
CHECKED MCP	09/02/11
DES ENG TSM	09/02/11

Harowe

OUTLINE & PERFORMANCE SPECIFICATION

RESOLVER BRUSHLESS

SIZE B | DWG. NO. 55BRCX-520-J5A

SCALE .75:1 | SHEET 1 OF 2 | CODE IDENT: 58655

Mouser Electronics

Authorized Distributor

Click to View Pricing, Inventory, Delivery & Lifecycle Information:

API Delevan:
55BRCX-520-J5A