MODEL NUMBER
21BRCX-500-H7A

REVISIONS					
REV	ECO	DESCRIPTION	DATE	BY	CHECKED
A	14549	NEW DRAWING	6/95	-	RKT
B	15113	SEE ECO	1/97	-	RKT
C	16000	SEE ECO	5/99	-	RKT
D	D7023	SEE ECO	8/22/05	DDK	DRW

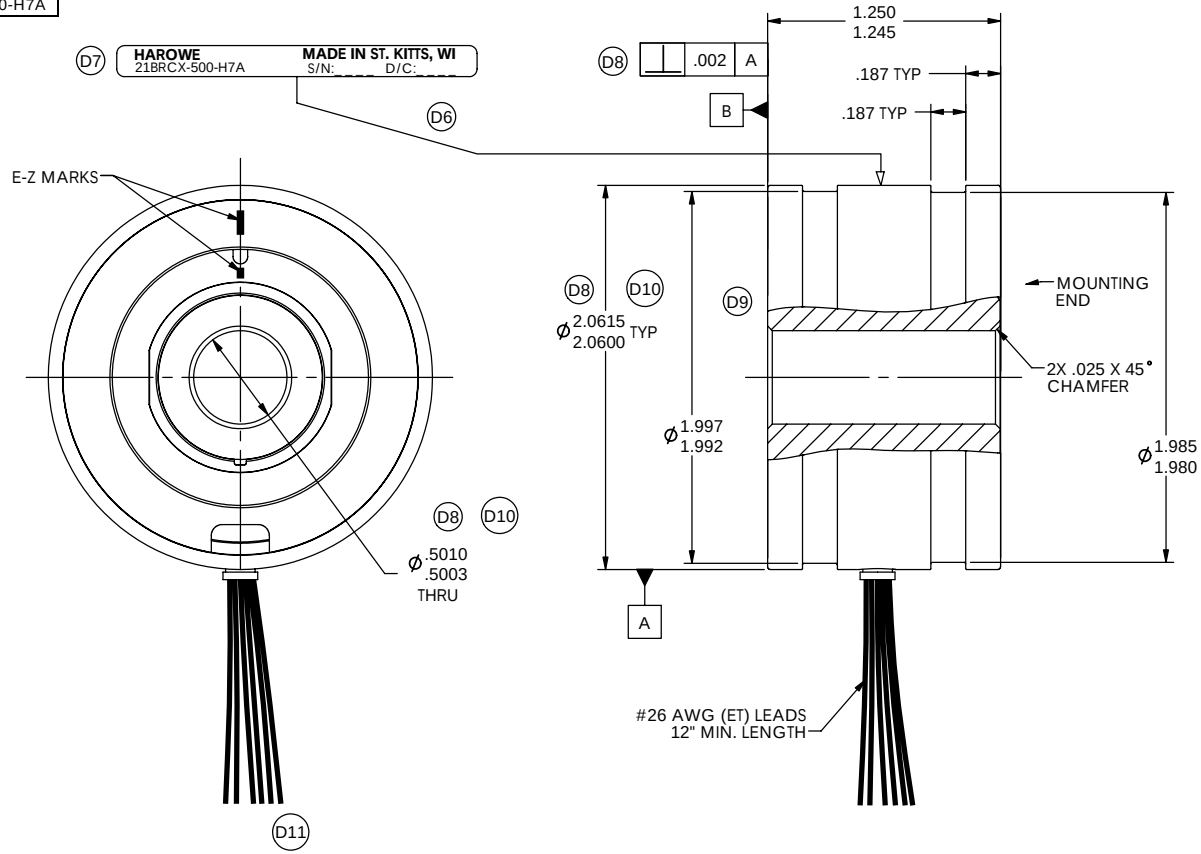

NOTES:

1. MATCHED SET - DO NOT ISSUE SEPARATELY.
2. (D2)
3. (D3) ROTOR AND STATOR TO BE AXIALLY ALIGNED WITH DATUM 'B' ±.025
4. (D4) CUSTOMER MUST MAINTAIN SHAFT RUNOUT WITH RESPECT TO DATUM 'A' WITHIN .003 T.I.R.

(D1)

ELECTRICAL & MECHANICAL DATA AT 25°C		
VALUES ARE REFERENCE UNLESS OTHERWISE TOLERANCED		
HIPOT TESTING PERFORMED AT 60HZ, 4 SECOND DURATION		
ELEC CYC / MECH CYC	deg/deg	1
EXCITATION FREQUENCY	±1% kHz	5
INPUT VOLTAGE	±5% Vrms	4.0
INPUT CURRENT	Max. mArms	25
INPUT POWER	Watts	.04
IMPEDANCE ZRO	Ohms	105 +J180
IMPEDANCE ZRS	Ohms	85 +J155
IMPEDANCE ZSO	Ohms	150 +J280
IMPEDANCE ZSS	Ohms	120 +J245
TRANSFORMATION RATIO	±10%	0.5
DC RESISTANCE (R1-R2)	±15% Ohms	31
DC RESISTANCE (S1-S3, S2-S4)	±15% Ohms	31
POSITION ERROR	Max. arcminutes	±7
PK-PK VELOCITY ERROR	Max. %	-
PHASE SHIFT, OPEN CIRCUIT	degrees	-6.0
NULL VOLTAGE	Max. mVrms	25
HIPOT, LEADS TO CASE, 500VAC	Max. mArms	2
HIPOT, INTERPHASE, 250VAC	Max. mArms	2
TEMPERATURE RANGE	°C	-55 TO 155
WEIGHT	oz	11

PHASING EQUATION

(D5) INCREASING ANGLE FOR CCW ROTATION AS VIEWED FROM MOUNTING END

$E\ (S1\text{-}S3) = KE\ (R1\text{-}R2)\ \cos\phi$
$E\ (S2\text{-}S4) = KE\ (R1\text{-}R2)\ \sin\phi$

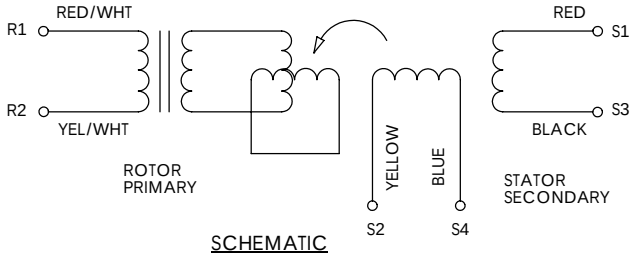

SCHEMATIC

THIRD ANGLE PROJECTION

UNLESS OTHERWISE SPECIFIED: DIMENSIONS ARE IN INCHES SHARP EDGES BROKEN .005/.010 INSIDE CORNERS R .015 MAX TOLERANCES: DECIMAL .00 ±.01 .000 ±.005 ANGLE ±0.5° CHAMFER ANGLE ±10° INTERPRETATION PER ASME Y14.5M-1994

THE INFORMATION CONTAINED IN THIS DRAWING IS THE SOLE PROPERTY OF HAROWE. ANY REPRODUCTION IN PART OR WHOLE WITHOUT THE WRITTEN PERMISSION OF HAROWE IS PROHIBITED.

APPROVALS	DATE
DRAWN DH	6/95
CHECKED DCH	6-26-95
DES ENG RKT	6-26-95

DANAHER INDUSTRIAL CONTROLS

OUTLINE & PERFORMANCE SPECIFICATION

RESOLVER BRUSHLESS FRAMELESS (D12)

SIZE B DWG. NO. 21BRCX-500-H7A

SCALE 1.5 : 1 SHEET 1 OF 2 CODE IDENT: 58655

Mouser Electronics

Authorized Distributor

Click to View Pricing, Inventory, Delivery & Lifecycle Information:

API Delevan:
21BRCX-500-H7A