REVISIONS					
REV	ECO	DESCRIPTION	DATE	BY	CHECKED
-	-	NEW DRAWING	1/11/2013	TSM	MCP
001	100131	SEE ECO	5/21/2013	TSM	MCP
A	100201	SEE ECO	5/9/2014	DRW	MCP
B	100305	SEE ECO	12/17/2015	DRW	DRW
C	100306	SEE ECO	2/9/2016	DRW	MCP

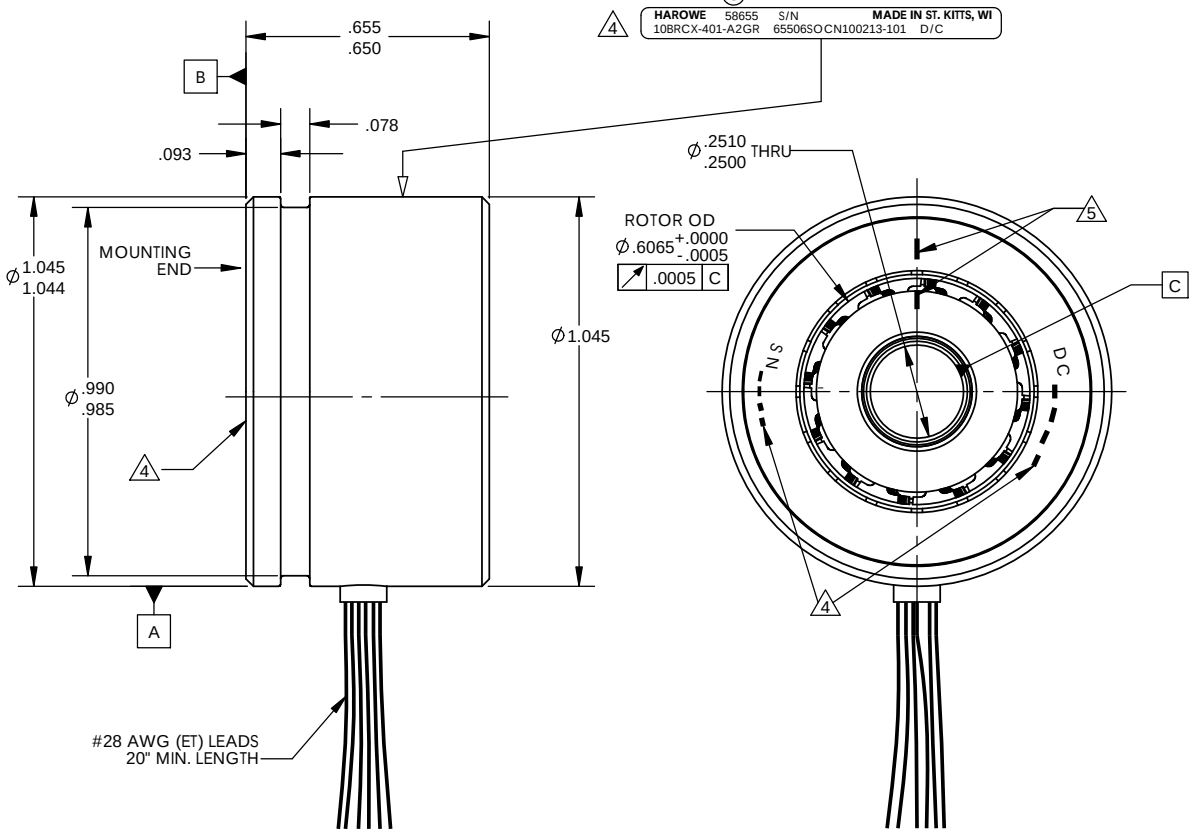

NOTES:

1. ROTOR & STATOR ARE A MATCHED PAIR. DO NOT INTERCHANGE ROTOR OR STATOR BETWEEN RESOLVERS.
2. CUSTOMER MUST MAINTAIN SHAFT RUNOUT WITH RESPECT TO DATUM 'A' WITHIN .003 T.I.R.
3. ROTOR AND STATOR TO BE AXIALLY ALIGNED WITH DATUM 'B' ± .010.

4 S/N AND D/C SHALL BE WRITTEN ON STATOR COVER AND ROTOR SPOOL.

5 ELECTRICAL ZERO TO BE MARKED ON ROTOR AND STATOR AS SHOWN.

ELECTRICAL & MECHANICAL DATA AT 25°C		
VALUES ARE REFERENCE UNLESS OTHERWISE TOLERANCED		
HIPOT TESTING PERFORMED AT 60HZ, 4 SECOND DURATION		
ELEC CYC / MECH CYC	deg/deg	1
EXCITATION FREQUENCY	±1% kHz	10
INPUT VOLTAGE	±5% Vrms	7.0
INPUT CURRENT	Max. mArms	50
INPUT POWER	Watts	0.14
IMPEDANCE ZRO	Ohms	90 +J160
IMPEDANCE ZRS	Ohms	75 +J145
IMPEDANCE ZSO	Ohms	250 +J425
IMPEDANCE ZSS	Ohms	210 +J385
TRANSFORMATION RATIO	±10%	0.50
DC RESISTANCE (R1-R2)	±15% Ohms	34
DC RESISTANCE (S1-S3, S2-S4)	±15% Ohms	74
POSITION ERROR	Max. arcminutes	±20
PK-PK VELOCITY ERROR	Max. %	-
PHASE SHIFT, OPEN CIRCUIT	degrees	-5
NULL VOLTAGE	Max. mVrms	20
HIPOT, LEADS TO CASE, 500VAC	Max. mArms	2
HIPOT, INTERPHASE, 250VAC	Max. mArms	2
TEMPERATURE RANGE	°C	- 55 TO + 155
WEIGHT	oz	1.3
CONTINUOUS SPEED	Max. kRPM	20

PHASING EQUATION

INCREASING ANGLE FOR CCW ROTATION OF ROTOR WHEN VIEWED FROM MOUNTING END

E (S1-S3) = KE (R1-R2) COS∅
E (S2-S4) = KE (R1-R2) SIN∅

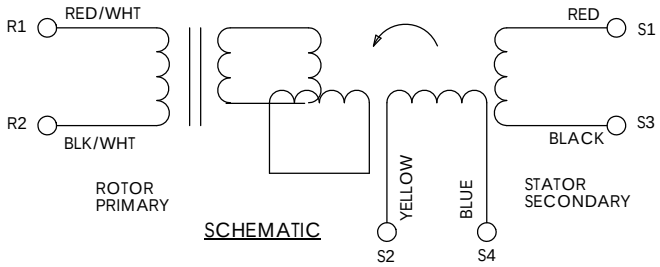

SCHEMATIC

THIRD ANGLE PROJECTION

THE INFORMATION CONTAINED IN THIS DRAWING IS THE SOLE PROPERTY OF HAROWE. ANY REPRODUCTION IN PART OR WHOLE WITHOUT THE WRITTEN PERMISSION OF HAROWE IS PROHIBITED.

UNLESS OTHERWISE SPECIFIED:
DIMENSIONS ARE IN INCHES
SHARP EDGES BROKEN .005/.010
INSIDE CORNERS R .015 MAX

APPROVALS	DATE
DRAWN TSM	01/11/13
CHECKED MCP	01/11/13
DES ENG TSM	01/11/13

INTERPRETATION PER ASME Y14.5M-1994

UNLESS OTHERWISE SPECIFIED:
TOLERANCES:
- DIMENSION .XX ±0.01, .XXX ±0.005
- ANGLE ±0.5°
- CHAMFER ±10°

Harowe

OUTLINE & PERFORMANCE SPECIFICATION

RESOLVER BRUSHLESS FRAMELESS

SIZE B | DWG. NO. 10BRCX-401-A2GR

SCALE 3:1 | SHEET 1 OF 2 | CODE IDENT: 58655

Mouser Electronics

Authorized Distributor

Click to View Pricing, Inventory, Delivery & Lifecycle Information:

API Delevan:

10BRCX-401-A2GR