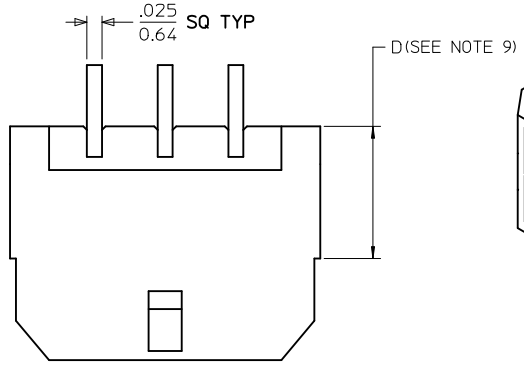

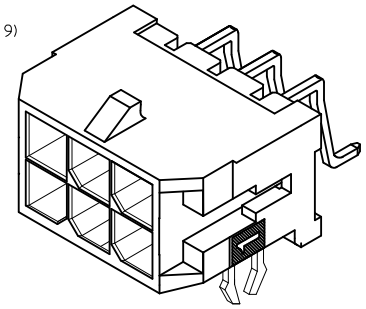

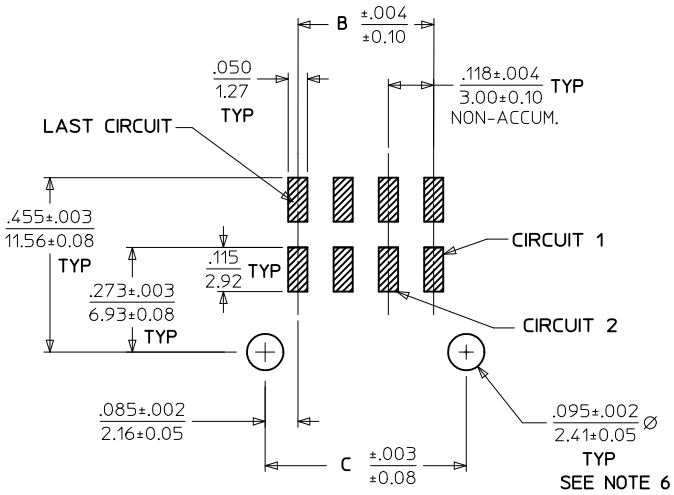

PCB LAYOUT: COMPONENT SIDE
RECOMMEND PCB THICKNESS: .062/1.57

CKTS	A	B	C
02	.262 6.65	NA	.169 4.30
06	.498 12.65	.236 6.00	.405 10.30
08	.616 15.65	.354 9.00	.524 13.30
12	.852 21.65	.591 15.00	.760 19.30
14	.970 24.65	.709 18.00	.878 22.30
20	1.325 33.65	1.063 27.00	1.232 31.30

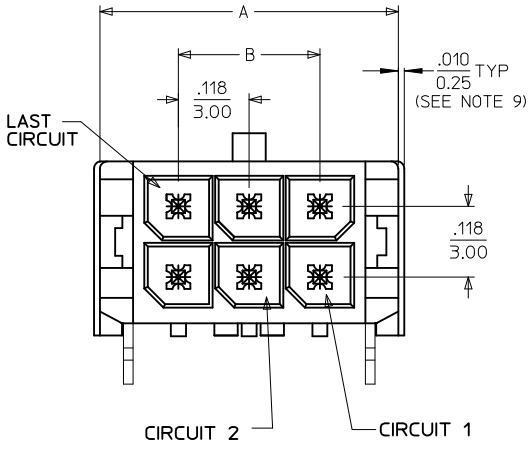

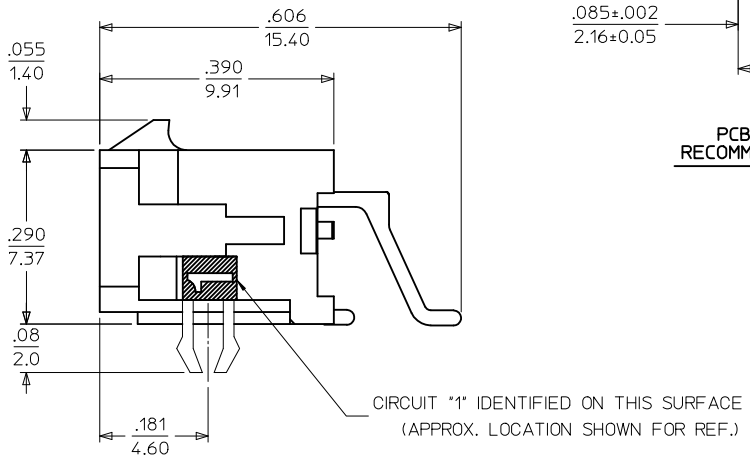

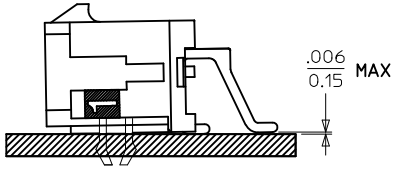

COPLANARITY DETAIL
(SEE NOTE #7)

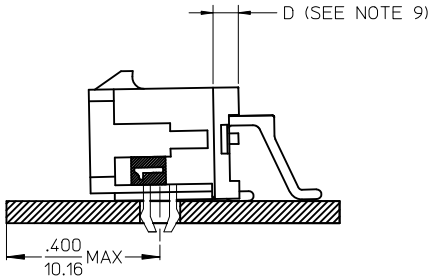

LOCATION DETAIL
(SEE NOTE #10)

NOTES:

1. HOUSING MATERIAL: GLASS FILLED LIQUID CRYSTAL POLYMER, UL94V-0, COLOR: BLACK
   TERMINAL MATERIAL: BRASS ALLOY
2. FINISH: A = .000100/(0.00254) MIN. TIN OVER
   .000050/(0.00127) MIN. NICKEL PLATE.
   B = .000015/(0.00038) MIN. SELECT GOLD IN CONTACT AREA;
   .000100/(0.00254) MIN. SELECT MATTE TIN ON SOLDER TAILS;
   BOTH OVER .000050/(0.00127) MIN. NICKEL PLATE.
   C = .000030/(0.00076) MIN. SELECT GOLD IN CONTACT AREA;
   .000100/(0.00254) MIN. SELECT MATTE TIN ON SOLDER TAILS;
   BOTH OVER .000050/(0.00127) MIN. NICKEL PLATE.
3. PRODUCT SPECIFICATION: PS-43045
4. TAPE AND REEL PACK: SEE MOLEX DRAWING PK-70873-05**
5. MATES WITH MICRO FIT (3.0) RECEPTACLE SERIES 43025
6. TO MINIMZE INSERTION FORCE OF MOUNTING CLIPS DURING ROBOTIC PLACEMENT THE HOLE DIAMETER SHOULD BE INCREASED TO .108±.002 / 2.74±0.05 AND THEN EVALUATED PER PLACEMENT EQUIPMENT.
7. THE COPLANARITY DIMENSION IS ESTABLISHED BY PLACING THE ASSEMBLY ON A FLAT SURFACE. THE DISTANCE FROM THAT SURFACE TO THE BOTTOM OF ANY TERMINAL MUST NOT EXCEED .006/0.15
8. THE PRIMARY SHIPPING CARTON WILL BE LABELED, "COMPLIANT TO RoHS DIRECTIVE 2002/95/EC AND ELV ANNEX II OF DIRECTIVE 2000/53/EC." ASSEMBLIES WILL BE COMPLIANT TO THE RoHS AND ELV (LEAD-FREE) DIRECTIVES.
9. CIRCUIT SIZES 2-6: "D" IS .265/6.74 FOR .010/0.25 STEP
   CIRCUIT SIZES 8-24: "D" IS .063/1.60 FOR .010/0.25 STEP.
10. TO AVOID INTERFERENCE BETWEEN RECEPTACLE AND PCB, HEADER MUST BE PLACED WITHIN .400/(10.16) MAX. FROM EDGE OF PCB, AS SHOWN IN LOCATION DETAIL.
11. THIS PART CONFORMS TO CLASS B REQUIREMENTS OF COSMETIC SPECIFICATION PS-45499-002.

	FINISH A		FINISH B		FINISH C
CKTS	MATERIAL NO:	CKTS	MATERIAL NO:	CKTS	MATERIAL NO:
06	43045-5606	02	43045-5207	08	43045-5808
12	43045-6206			12	43045-6208
14	43045-6406			20	43045-7008

ADD "D" DIM
EC NO: UCP2011-0508
DRWN:GMARANANI 2010/08/26
CHKD:SSOUSEK 2010/08/26
APPR:FSMITH 2010/12/23
DESCRIPTION
REV
C

QUALITY SYMBOLS
AQL =0
AQL =0
AQL =0

GENERAL TOLERANCES (UNLESS SPECIFIED)

	mm	INCH
4 PLACES	± ---	± ---
3 PLACES	± ---	± .010
2 PLACES	± 0.25	± .014
1 PLACE	± 0.36	± ---
ANGULAR ±1/2°		

DRAFT WHERE APPLICABLE MUST REMAIN WITHIN DIMENSIONS

DIMENSION STYLE: IN/MM
SCALE: ---
DESIGN UNITS: METRIC
THIRD ANGLE PROJECTION

DRAWN BY: RHOLTS DATE: 2004/07/15
CHECKED BY: LSCHMIDT DATE: 2004/07/15
APPROVED BY: FSMITH DATE: 2004/07/15

TITLE: MICRO FIT (3.0) DUAL ROW RIGHT ANGLE SMT HEADER W/CLIPS ASSY, LEAD-FREE

molex MOLEX INCORPORATED

MATERIAL NO.: SEE CHART
DOCUMENT NO.: SD-43045-018
SHEET NO.: 1 OF 1
SIZE: C

THIS DRAWING CONTAINS INFORMATION THAT IS PROPRIETARY TO MOLEX INCORPORATED AND SHOULD NOT BE USED WITHOUT WRITTEN PERMISSION

Mouser Electronics

Authorized Distributor

Click to View Pricing, Inventory, Delivery & Lifecycle Information:

Molex:
43045-5207