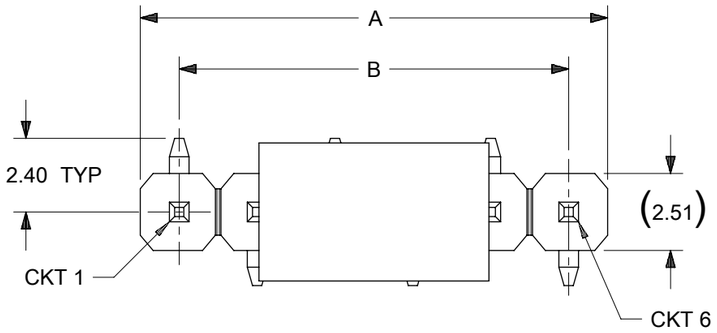

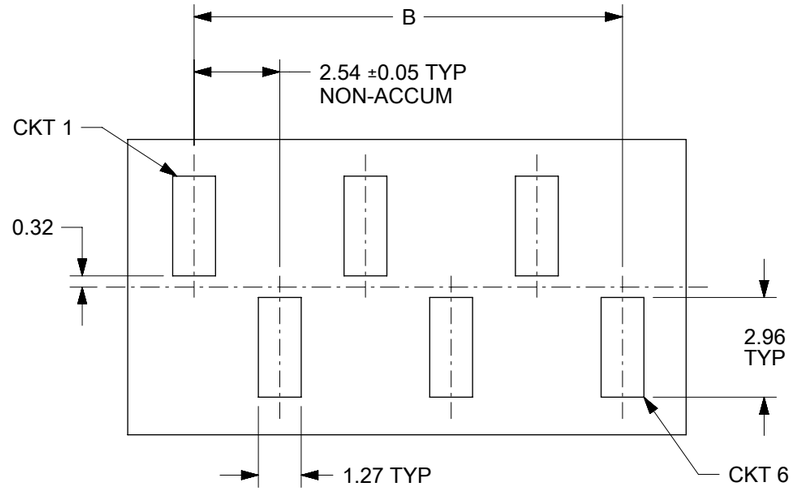

RECOMMENDED PCB LAYOUT: COMPONENT SIDE

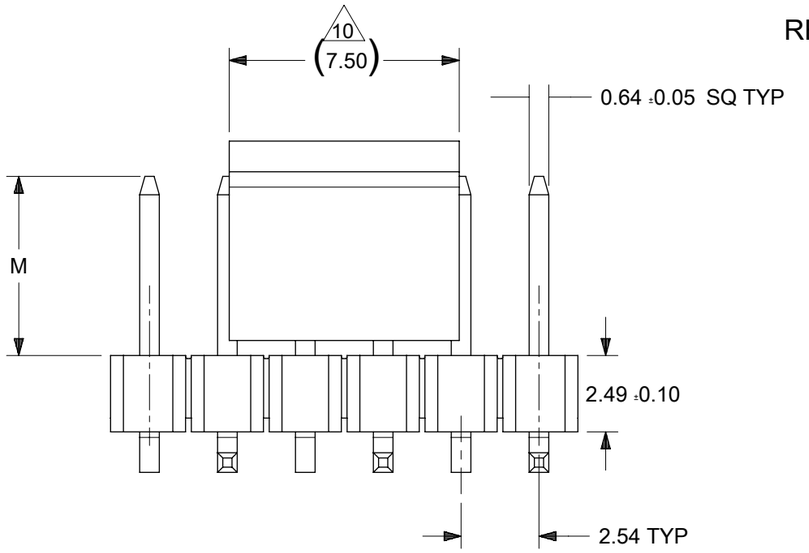

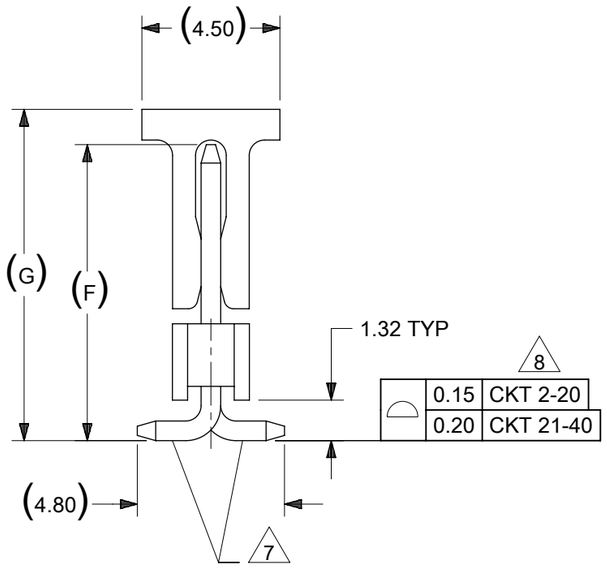

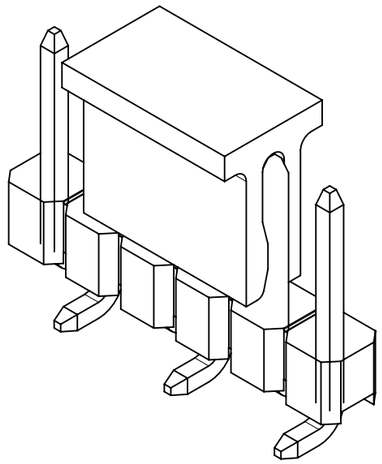

NOTES:

1. MATERIAL:
   HSG: NYLON, GLASS-FILLED, UL94V-0, COLOR: BLACK
   CAP: NYLON, GLASS-FILLED, UL94V-0, COLOR: BLACK
   PIN: 0.64MM SQ, COPPER ALLOY
2. PLATING TYPE:
   (1) GOLD FLASH OVER
   1.25µm MIN. NICKEL OVERALL.
   (2) GOLD FLASH ON CONTACT AND
   2.50µm MIN. TIN ON SOLDERTAIL OVER
   1.25µm MIN. NICKEL OVERALL.
   (4) 0.38µm MIN. GOLD PLATE ON CONTACT AND
   2.00µm MIN. TIN ON SOLDERTAIL OVER
   1.25µm MIN. NICKEL OVERALL.
   (5) 0.75µm MIN. GOLD PLATE ON CONTACT AND
   2.00µm MIN. TIN ON SOLDERTAIL OVER
   1.25µm MIN. NICKEL OVERALL.
   (6) 2.50µm MIN. TIN OVERALL
   1.25µm MIN. NICKEL OVERALL
3. PRODUCT SPECIFICATION: PS-87920-019
4. PACKAGING TYPE: SEE TABLE
5. PACKAGING SPEC:
   TUBE WITH CAP VERSION: PK-89990-558
   TUBE W/O CAP VERSION: PK-89990-545
   TRAY W/O CAP: PK-89990-489
   EMBOSS TAPE WITH CAP: PK-89990-486 AND PK-87898-400
6. WAFER TO BE FLAT WITHIN 0.003 mm/mm
7. BEND DEPRESSION IS ACCEPTED SO LONG AS IT DOES NOT AFFECT THE OVERALL COPLANARITY OF TAIL
8. COPLANARITY IS TO BE MEASURED BY RESTING THE SOLDER TAIL ON A FLAT SURFACE
9. IRREGULAR CIRCUIT CUTOFF WITHIN BREAKAWAY SECTION IS PERMISSIBLE.CUTTING OR CHIPPING OF THE MAIN BODY IS NOT ACCEPTABLE
10. CAP LOCATION IS CENTERED ALONG THE MATING ENDS AS SHOWN. TOP SURFACE OF CAP TO BE FLAT FOR THE PURPOSE OF PICK & PLACE BY VACUUM SUCTION NOZZLE
11. RECOMMENDED PCB THICKNESS IS 1.60mm±0.10
12. THE ABOVE CKT 6 IS FOR ILLUSTRATION PURPOSE ONLY
13. TUBE LENGTH AS PER STANDARD 560mm

THIS DRAWING CONTAINS INFORMATION THAT IS PROPRIETARY TO MOLEX ELECTRONIC TECHNOLOGIES, LLC AND SHOULD NOT BE USED WITHOUT WRITTEN PERMISSION

DIMENSION UNITS	SCALE
mm	NTS

GENERAL TOLERANCES (UNLESS SPECIFIED)

	MM	INCH
4 PLACES	±	±
3 PLACES	±	±
2 PLACES	± 0.2	±
1 PLACE	±	±
0 PLACES	±	±
ANGULAR TOL	± 3.0 °	

DRAFT WHERE APPLICABLE MUST REMAIN WITHIN DIMENSIONS

CURRENT REV DESC: BRIGHT TIN PHASE OUT

EC NO: 679909
DRWN: AKUMAR19 2021/06/29
CHK'D: MRAMAKRISHNA 2021/10/11
APPR: MRAMAKRISHNA 2021/10/11

INITIAL REVISION:
DRWN: GGUNAGI 2016/11/09
APPR: ISHWARG 2016/12/06

THIRD ANGLE PROJECTION | DRAWING: A3-SIZE | SERIES: 87898

molex

CUSTOM HEADER
2.54MM PITCH SINGLE ROW SINGLE WAFER SMT HEADER

PRODUCT CUSTOMER DRAWING

DOCUMENT NUMBER	DOC TYPE	DOC PART	REVISION
SD-87898-001	PSD	000	B24

MATERIAL NUMBER	CUSTOMER	SHEET NUMBER
SEE TABLE	GENERAL MARKET	1 OF 21

DOCUMENT STATUS	P1	RELEASE DATE	2021/10/11 11:53:29

FORMAT: Met-lega-master-tb-prod-A3
REVISION: E
DATE: 2020/01/14

PACKAGING OPTION PART NO.						CKT SIZE	VOID POSITION	PLATING TYPE	DIMENSION				
TRAY WITHOUT CAP	TRAY WITH CAP	TUBE WITHOUT CAP	TUBE WITH CAP	TAPE & REEL WITHOUT CAP	TAPE & REEL WITH CAP				A	B	G	F	M
87898-0301	------	------	------	------	------	3	-----	1	7.62	5.08	10.81	9.65	5.84
87898-0302	------		------	------	------	3	-----	2	7.62	5.08	10.81	9.65	5.84
87898-0304	------	------	------	------	87898-0314	3	-----	4	7.62	5.08	10.81	9.65	5.84
87898-0305	------	------	------	------	87898-0315	3	-----	5	7.62	5.08	10.81	9.65	5.84
87898-0306	------	------	------	------	87898-0316	3	-----	6	7.62	5.08	10.81	9.65	5.84
87898-0307	------	------	------	------	87898-0320	3	-----	6	7.62	5.08	10.81	9.65	5.84
------	------	------	------	------	87898-0317	3	-------	6	7.62	5.08	10.81	9.65	5.84
------	------	------	------	------	87898-0321	3	-------	6	7.62	5.08	10.81	9.65	5.84
------	------	-----	-----	------	87898-0318	3	-----	5	7.62	5.08	10.81	9.65	5.84
-----	-----	-----	-----	-----	87898-0310	3	------	6	7.62	5.08	14.91	13.91	10.10
-----	-----	-----	-----	-----	87898-0309	3	------	6	7.62	5.08	14.81	13.81	10.00
------	------	87898-0370	------	------	------	3	------	6	7.62	5.08	----	13.91	10.10

REFER TO LAST SHEET FOR 2CKT SIZE

B24

THIS DRAWING CONTAINS INFORMATION THAT IS PROPRIETARY TO MOLEX ELECTRONIC TECHNOLOGIES, LLC AND SHOULD NOT BE USED WITHOUT WRITTEN PERMISSION

DIMENSION UNITS	SCALE
mm	NTS

GENERAL TOLERANCES (UNLESS SPECIFIED)

	MM	INCH
4 PLACES	±	±
3 PLACES	±	±
2 PLACES	± 0.2	±
1 PLACE	±	±
0 PLACES	±	±
ANGULAR TOL	± 3.0 °	

DRAFT WHERE APPLICABLE MUST REMAIN WITHIN DIMENSIONS

CURRENT REV DESC: BRIGHT TIN PHASE OUT

EC NO: 679909
DRWN: AKUMAR19 2021/06/29
CHK'D: MRAMAKRISHNA 2021/10/11
APPR: MRAMAKRISHNA 2021/10/11

INITIAL REVISION:
DRWN: GGUNAGI 2016/11/09
APPR: ISHWARG 2016/12/06

molex

CUSTOM HEADER
2.54MM PITCH SINGLE ROW SINGLE WAFER SMT HEADER

PRODUCT CUSTOMER DRAWING

DOCUMENT NUMBER	DOC TYPE	DOC PART	REVISION
SD-87898-001	PSD	000	B24

THIRD ANGLE PROJECTION	DRAWING	SERIES	MATERIAL NUMBER	CUSTOMER	SHEET NUMBER
	A3-SIZE	87898	SEE TABLE	GENERAL MARKET	2 OF 21

DOCUMENT STATUS	P1	RELEASE DATE	2021/10/11 11:53:29

FORMAT: Met-lega-master-tb-prod-A3
REVISION: E
DATE: 2020/01/14

PACKAGING OPTION PART NO.						CKT SIZE	VOID POSITION	PLATING TYPE	MODIFIED MATING CKT	MODIFIED MATING LENGTH	DIMENSION					
TRAY WITHOUT CAP	TRAY WITH CAP	TUBE WITHOUT CAP	TUBE WITH CAP	TAPE & REEL WITHOUT CAP	TAPE & REEL WITH CAP						A	B	G	F	M	
------	------	87898-0421	87898-0431	------	87898-0451	4	-----	1	-----	-----	10.16	7.62	10.81	9.65	5.84	
------	------	87898-0422	87898-0432	------	87898-0452	4	-----	2	-----	-----	10.16	7.62	10.81	9.65	5.84	
------	------	87898-0424	87898-0434	------	87898-0454	4	-----	4	-----	-----	10.16	7.62	10.81	9.65	5.84	
------	------	87898-0425	87898-0435	------	87898-0455	4	-----	5	-----	-----	10.16	7.62	10.81	9.65	5.84	
------	------	87898-0426	87898-0436	------	87898-0456	4	-----	6	-----	-----	10.16	7.62	10.81	9.65	5.84	
------	------	87898-0428	87898-0437	------	87898-0460	4	-----	6	-----	-----	10.16	7.62	10.81	9.65	5.84	B24
------	------	-----	------	------	87898-0457	4	-----	6	-----	-----	10.16	7.62	10.81	9.65	5.84	
------	------	-----	-----	------	87898-0458	4	-----	5	-----	-----	10.16	7.62	10.81	9.65	5.84	
-----	-----	-----	-----	-----	87898 - 0480	4	CKT# 4	5	-----	-----	10.16	7.62	14.70	13.65	9.84	
-----	-----	-----	-----	-----	87898 - 0481	4	-----	5	CKT # 1, 2 & 3	1.00	10.16	7.62	17.70	16.65	12.84	
87898 - 0482	-----	-----	-----	-----	-----	4	-----	---	CKT # 1, 2 & 3	1.00	10.16	7.62	---	16.65	12.84	
-----	-----	-----	-----	-----	87898 - 0483	4	-----	---	CKT # 1, 2 & 3	1.00	10.16	7.62	14.70	13.65	9.84	
-----	-----	87898-0427	-----	-----	-----	4	-----	---	-----	-----	10.16	7.62	---	11.87	8.06	
------	------	87898-0521	87898-0531	------	87898-0551	5	-----	1	-----	-----	12.70	10.16	10.81	9.65	5.84	
------	------	87898-0522	87898-0532	------	87898-0552	5	-----	2	-----	-----	12.70	10.16	10.81	9.65	5.84	
------	------	87898-0524	87898-0534	------	87898-0554	5	-----	4	-----	-----	12.70	10.16	10.81	9.65	5.84	
------	------	87898-0525	87898-0535	------	87898-0555	5	-----	5	-----	-----	12.70	10.16	10.81	9.65	5.84	
------	------	87898-0526	87898-0536	87898-0583 B23	87898-0556	5	-----	6	-----	-----	12.70	10.16	10.81	9.65	5.84	
------	------	87898-0528	87898-0538	87898-0584	87898-0558	5	-----	6	-----	-----	12.70	10.16	10.81	9.65	5.84	B24
87898-0581	-----	-----	-----	-----	-----	5	-----	4	-----	-----	12.70	10.16	---	24.18	20.25	
------	------	------	------	------	87898-0576	5	------	5	-----	-----	12.70	10.16	14.35	13.31	9.50	
------	------	87898-0621	87898-0631	------	87898-0651	6	-----	1	-----	-----	15.24	12.70	10.81	9.65	5.84	
------	------	87898-0622	87898-0632	------	87898-0652	6	-----	2	-----	-----	15.24	12.70	10.81	9.65	5.84	
------	------	87898-0624	87898-0634	------	87898-0654	6	-----	4	-----	-----	15.24	12.70	10.81	9.65	5.84	
------	------	87898-0625	87898-0635	------	87898-0655	6	-----	5	-----	-----	15.24	12.70	10.81	9.65	5.84	
------	------	87898-0626	87898-0636	------	87898-0656	6	-----	6	-----	-----	15.24	12.70	10.81	9.65	5.84	
------	------	87898-0628	87898-0638	------	87898-0658	6	-----	6	-----	-----	15.24	12.70	10.81	9.65	5.84	B24
87898-0607	------	------	------	------	87898-0657	6	-----	6	-----	-----	15.24	12.70	16.47	15.31	11.50	
-----	-----	-----	-----	-----	87898-0605	6	-----	5	-----	-----	15.24	12.70	12.98	11.94	8.13	
------	------	87898-0604	------	------	------	6	----	5	-----	-----	15.24	12.70	---	13.31	9.50	

THIS DRAWING CONTAINS INFORMATION THAT IS PROPRIETARY TO MOLEX ELECTRONIC TECHNOLOGIES, LLC AND SHOULD NOT BE USED WITHOUT WRITTEN PERMISSION

DIMENSION UNITS	SCALE
mm	NTS

GENERAL TOLERANCES (UNLESS SPECIFIED)

	MM	INCH
4 PLACES	±	±
3 PLACES	±	±
2 PLACES	± 0.2	±
1 PLACE	±	±
0 PLACES	±	±
ANGULAR TOL	± 3.0 °	

DRAFT WHERE APPLICABLE MUST REMAIN WITHIN DIMENSIONS

CURRENT REV DESC: BRIGHT TIN PHASE OUT

EC NO: 679909
DRWN: AKUMAR19 2021/06/29
CHK'D: MRAMAKRISHNA 2021/10/11
APPR: MRAMAKRISHNA 2021/10/11

INITIAL REVISION:
DRWN: GGUNAGI 2016/11/09
APPR: ISHWARG 2016/12/06

molex

CUSTOM HEADER
2.54MM PITCH SINGLE ROW SINGLE WAFER SMT HEADER

PRODUCT CUSTOMER DRAWING

DOCUMENT NUMBER	DOC TYPE	DOC PART	REVISION
SD-87898-001	PSD	000	B24

THIRD ANGLE PROJECTION	DRAWING	SERIES	MATERIAL NUMBER	CUSTOMER	SHEET NUMBER
	A3-SIZE	87898	SEE TABLE	GENERAL MARKET	3 OF 21

DOCUMENT STATUS	P1	RELEASE DATE	2021/10/11 11:53:29

FORMAT: Met-lega-master-tb-prod-A3
REVISION: E
DATE: 2020/01/14

PACKAGING OPTION PART NO.						CKT SIZE	VOID POSITION	PLATING TYPE	DIMENSION					
TRAY WITHOUT CAP	TRAY WITH CAP	TUBE WITHOUT CAP	TUBE WITH CAP	TAPE & REEL WITHOUT CAP	TAPE & REEL WITH CAP				A	B	G	F	M	
------	------	87898-0721	87898-0731	------	87898-0751	7	-----	1	17.78	15.24	10.81	9.65	5.84	
------	------	87898-0722	87898-0732	------	87898-0752	7	-----	2	17.78	15.24	10.81	9.65	5.84	
------	------	87898-0724	87898-0734	------	87898-0754	7	-----	4	17.78	15.24	10.81	9.65	5.84	
------	------	87898-0725	87898-0735	------	87898-0755	7	-----	5	17.78	15.24	10.81	9.65	5.84	
------	------	87898-0726	87898-0736	------	87898-0756	7	-----	6	17.78	15.24	10.81	9.65	5.84	
------	------	87898-0727	87898-0737	------	87898-0758	7	-----	6	17.78	15.24	10.81	9.65	5.84	B24
------	------	------	------	B22 87898-0757	------	7	------	6	17.78	15.24	---	9.65	5.84	
------	------	------	------	87898-0759	------	7	------	6	17.78	15.24	---	9.65	5.84	B24
-----	-----	87898-0720	-----	-----	-----	7	-----	5	17.78	15.24	---	9.81	6.00	
-----	-----	87898-0767	-----	-----	-----	7	-----	5	17.78	15.24	---	13.81	10.00	
------	------	87898-0821	87898-0831	------	87898-0851	8	-----	1	20.32	17.78	10.81	9.65	5.84	
------	------	87898-0822	87898-0832	------	87898-0852	8	-----	2	20.32	17.78	10.81	9.65	5.84	
------	------	87898-0824	87898-0834	------	87898-0854	8	-----	4	20.32	17.78	10.81	9.65	5.84	
------	------	87898-0825	87898-0835	------	87898-0855	8	-----	5	20.32	17.78	10.81	9.65	5.84	
------	------	87898-0826	87898-0836	------	87898-0856	8	-----	6	20.32	17.78	10.81	9.65	5.84	
------	------	87898-0827	87898-0837	------	87898-0857	8	-----	6	20.32	17.78	10.81	9.65	5.84	B24
87898-0881	-----	-----	-----	-----	-----	8	----	4	20.32	17.78	---	21.84	17.91	
------	------	87898-0921	87898-0931	------	87898-0951	9	-----	1	22.86	20.32	10.81	9.65	5.84	
------	------	87898-0922	87898-0932	------	87898-0952	9	-----	2	22.86	20.32	10.81	9.65	5.84	
------	------	87898-0924	87898-0934	------	87898-0954	9	-----	4	22.86	20.32	10.81	9.65	5.84	
------	------	87898-0925	87898-0935	------	87898-0955	9	-----	5	22.86	20.32	10.81	9.65	5.84	
------	------	87898-0926	87898-0936	------	87898-0956	9	-----	6	22.86	20.32	10.81	9.65	5.84	

THIS DRAWING CONTAINS INFORMATION THAT IS PROPRIETARY TO MOLEX ELECTRONIC TECHNOLOGIES, LLC AND SHOULD NOT BE USED WITHOUT WRITTEN PERMISSION

DIMENSION UNITS	SCALE
mm	NTS

GENERAL TOLERANCES (UNLESS SPECIFIED)

	MM	INCH
4 PLACES	±	±
3 PLACES	±	±
2 PLACES	± 0.2	±
1 PLACE	±	±
0 PLACES	±	±
ANGULAR TOL	± 3.0 °	

DRAFT WHERE APPLICABLE MUST REMAIN WITHIN DIMENSIONS

CURRENT REV DESC: BRIGHT TIN PHASE OUT

EC NO: 679909
DRWN: AKUMAR19 2021/06/29
CHK'D: MRAMAKRISHNA 2021/10/11
APPR: MRAMAKRISHNA 2021/10/11

INITIAL REVISION:
DRWN: GGUNAGI 2016/11/09
APPR: ISHWARG 2016/12/06

THIRD ANGLE PROJECTION | DRAWING: A3-SIZE | SERIES: 87898

molex

CUSTOM HEADER
2.54MM PITCH SINGLE ROW SINGLE WAFER SMT HEADER

PRODUCT CUSTOMER DRAWING

DOCUMENT NUMBER	DOC TYPE	DOC PART	REVISION
SD-87898-001	PSD	000	B24

MATERIAL NUMBER	CUSTOMER	SHEET NUMBER
SEE TABLE	GENERAL MARKET	4 OF 21

DOCUMENT STATUS	P1	RELEASE DATE	2021/10/11 11:53:29

FORMAT: Met-lega-master-tb-prod-A3
REVISION: E
DATE: 2020/01/14

PACKAGING OPTION PART NO.						CKT SIZE	VOID POSITION	PLATING TYPE	DIMENSION				
TRAY WITHOUT CAP	TRAY WITH CAP	TUBE WITHOUT CAP	TUBE WITH CAP	TAPE & REEL WITHOUT CAP	TAPE & REEL WITH CAP				A	B	G	F	M
------	------	87898-1021	87898-1031	------	87898-1051	10	-----	1	25.40	22.86	10.81	9.65	5.84
------	------	87898-1022	87898-1032	------	87898-1052	10	-----	2	25.40	22.86	10.81	9.65	5.84
------	------	87898-1024	87898-1034	------	87898-1054	10	-----	4	25.40	22.86	10.81	9.65	5.84
------	------	87898-1025	87898-1035	------	87898-1055	10	-----	5	25.40	22.86	10.81	9.65	5.84
------	------	87898-1026	87898-1036	------	87898-1056	10	-----	6	25.40	22.86	10.81	9.65	5.84
------	------	87898-1027	87898-1037	------	87898-1057	10	-----	6	25.40	22.86	10.81	9.65	5.84
------	-----	87898-1003	-----	-----	-----	10	-----	5	25.40	22.86	---	9.81	6.00
------	------	87898-1121	87898-1131	------	87898-1151	11	-----	1	27.94	25.40	10.81	9.65	5.84
------	------	87898-1122	87898-1132	------	87898-1152	11	-----	2	27.94	25.40	10.81	9.65	5.84
------	------	87898-1124	87898-1134	------	87898-1154	11	-----	4	27.94	25.40	10.81	9.65	5.84
------	------	87898-1125	87898-1135	------	87898-1155	11	-----	5	27.94	25.40	10.81	9.65	5.84
------	------	87898-1126	87898-1136	------	87898-1156	11	-----	6	27.94	25.40	10.81	9.65	5.84
------	------	87898-1221	87898-1231	------	87898-1251	12	-----	1	30.48	27.94	10.81	9.65	5.84
------	------	87898-1222	87898-1232	------	87898-1252	12	-----	2	30.48	27.94	10.81	9.65	5.84
------	------	87898-1224	87898-1234	------	87898-1254	12	-----	4	30.48	27.94	10.81	9.65	5.84
------	------	87898-1225	87898-1235	------	87898-1255	12	-----	5	30.48	27.94	10.81	9.65	5.84
------	------	87898-1226	87898-1236	------	87898-1256	12	-----	6	30.48	27.94	10.81	9.65	5.84

B24

THIS DRAWING CONTAINS INFORMATION THAT IS PROPRIETARY TO MOLEX ELECTRONIC TECHNOLOGIES, LLC AND SHOULD NOT BE USED WITHOUT WRITTEN PERMISSION

DIMENSION UNITS	SCALE
mm	NTS

GENERAL TOLERANCES (UNLESS SPECIFIED)

	MM	INCH
4 PLACES	±	±
3 PLACES	±	±
2 PLACES	± 0.2	±
1 PLACE	±	±
0 PLACES	±	±
ANGULAR TOL	± 3.0 °	

DRAFT WHERE APPLICABLE MUST REMAIN WITHIN DIMENSIONS

CURRENT REV DESC: BRIGHT TIN PHASE OUT

EC NO: 679909
DRWN: AKUMAR19 2021/06/29
CHK'D: MRAMAKRISHNA 2021/10/11
APPR: MRAMAKRISHNA 2021/10/11

INITIAL REVISION:
DRWN: GGUNAGI 2016/11/09
APPR: ISHWARG 2016/12/06

molex

CUSTOM HEADER
2.54MM PITCH SINGLE ROW SINGLE WAFER SMT HEADER

PRODUCT CUSTOMER DRAWING

DOCUMENT NUMBER	DOC TYPE	DOC PART	REVISION
SD-87898-001	PSD	000	B24

THIRD ANGLE PROJECTION	DRAWING	SERIES	MATERIAL NUMBER	CUSTOMER	SHEET NUMBER
	A3-SIZE	87898	SEE TABLE	GENERAL MARKET	5 OF 21

DOCUMENT STATUS	P1	RELEASE DATE	2021/10/11 11:53:29

FORMAT: Met-lega-master-tb-prod-A3
REVISION: E
DATE: 2020/01/14

PACKAGING OPTION PART NO.						CKT SIZE	VOID POSITION	PLATING TYPE	DIMENSION				
TRAY WITHOUT CAP	TRAY WITH CAP	TUBE WITHOUT CAP	TUBE WITH CAP	TAPE & REEL WITHOUT CAP	TAPE & REEL WITH CAP				A	B	G	F	M
------	------	87898-1321	87898-1331	------	87898-1351	13	-----	1	33.02	30.48	10.81	9.65	5.84
------	------	87898-1322	87898-1332	------	87898-1352	13	-----	2	33.02	30.48	10.81	9.65	5.84
------	------	87898-1324	87898-1334	------	87898-1354	13	-----	4	33.02	30.48	10.81	9.65	5.84
------	------	87898-1325	87898-1335	------	87898-1355	13	-----	5	33.02	30.48	10.81	9.65	5.84
------	------	87898-1326	87898-1336	------	87898-1356	13	-----	6	33.02	30.48	10.81	9.65	5.84
------	------	87898-1421	87898-1431	------	87898-1451	14	-----	1	35.56	33.02	10.81	9.65	5.84
------	------	87898-1422	87898-1432	------	87898-1452	14	-----	2	35.56	33.02	10.81	9.65	5.84
------	------	87898-1424	87898-1434	------	87898-1454	14	-----	4	35.56	33.02	10.81	9.65	5.84
------	------	87898-1425	87898-1435	------	87898-1455	14	-----	5	35.56	33.02	10.81	9.65	5.84
------	------	87898-1426	87898-1436	------	87898-1456	14	-----	6	35.56	33.02	10.81	9.65	5.84
------	------	87898-1427	87898-1437	------	87898-1457	14	-----	6	35.56	33.02	10.81	9.65	5.84
------	------	87898-1521	87898-1531	------	87898-1551	15	-----	1	38.10	35.56	10.81	9.65	5.84
------	------	87898-1522	87898-1532	------	87898-1552	15	-----	2	38.10	35.56	10.81	9.65	5.84
------	------	87898-1524	87898-1534	------	87898-1554	15	-----	4	38.10	35.56	10.81	9.65	5.84
------	------	87898-1525	87898-1535	------	87898-1555	15	-----	5	38.10	35.56	10.81	9.65	5.84
------	------	87898-1526	87898-1536	------	87898-1556	15	-----	6	38.10	35.56	10.81	9.65	5.84

B24

THIS DRAWING CONTAINS INFORMATION THAT IS PROPRIETARY TO MOLEX ELECTRONIC TECHNOLOGIES, LLC AND SHOULD NOT BE USED WITHOUT WRITTEN PERMISSION

DIMENSION UNITS	SCALE
mm	NTS

GENERAL TOLERANCES (UNLESS SPECIFIED)

	MM	INCH
4 PLACES	±	±
3 PLACES	±	±
2 PLACES	± 0.2	±
1 PLACE	±	±
0 PLACES	±	±
ANGULAR TOL	± 3.0 °	

DRAFT WHERE APPLICABLE MUST REMAIN WITHIN DIMENSIONS

CURRENT REV DESC: BRIGHT TIN PHASE OUT

EC NO: 679909
DRWN: AKUMAR19 2021/06/29
CHK'D: MRAMAKRISHNA 2021/10/11
APPR: MRAMAKRISHNA 2021/10/11

INITIAL REVISION:
DRWN: GGUNAGI 2016/11/09
APPR: ISHWARG 2016/12/06

molex

CUSTOM HEADER
2.54MM PITCH SINGLE ROW SINGLE WAFER SMT HEADER

PRODUCT CUSTOMER DRAWING

DOCUMENT NUMBER	DOC TYPE	DOC PART	REVISION
SD-87898-001	PSD	000	B24

THIRD ANGLE PROJECTION	DRAWING	SERIES	MATERIAL NUMBER	CUSTOMER	SHEET NUMBER
	A3-SIZE	87898	SEE TABLE	GENERAL MARKET	6 OF 21

DOCUMENT STATUS	P1	RELEASE DATE	2021/10/11 11:53:29

FORMAT: Met-lega-master-tb-prod-A3
REVISION: E
DATE: 2020/01/14

PACKAGING OPTION PART NO.						CKT SIZE	VOID POSITION	PLATING TYPE	DIMENSION					
TRAY WITHOUT CAP	TRAY WITH CAP	TUBE WITHOUT CAP	TUBE WITH CAP	TAPE & REEL WITHOUT CAP	TAPE & REEL WITH CAP				A	B	G	F	M	
------	------	87898-1621	87898-1631	------	87898-1651	16	-----	1	40.64	38.10	10.81	9.65	5.84	
------	------	87898-1622	87898-1632	------	87898-1652	16	-----	2	40.64	38.10	10.81	9.65	5.84	
------	------	87898-1624	87898-1634	------	87898-1654	16	-----	4	40.64	38.10	10.81	9.65	5.84	
------	------	87898-1625	87898-1635	------	87898-1655	16	-----	5	40.64	38.10	10.81	9.65	5.84	
------	------	87898-1626	87898-1636	------	87898-1656	16	-----	6	40.64	38.10	10.81	9.65	5.84	
------	------	87898-1627	87898-1637	------	87898-1657	16	-----	6	40.64	38.10	10.81	9.65	5.84	B24
------	------	87898-1721	87898-1731	------	87898-1751	17	-----	1	43.18	40.64	10.81	9.65	5.84	
------	------	87898-1722	87898-1732	------	87898-1752	17	-----	2	43.18	40.64	10.81	9.65	5.84	
------	------	87898-1724	87898-1734	------	87898-1754	17	-----	4	43.18	40.64	10.81	9.65	5.84	
------	------	87898-1725	87898-1735	------	87898-1755	17	-----	5	43.18	40.64	10.81	9.65	5.84	
------	------	87898-1726	87898-1736	------	87898-1756	17	-----	6	43.18	40.64	10.81	9.65	5.84	
------	------	87898-1821	87898-1831	------	87898-1851	18	-----	1	45.72	43.18	10.81	9.65	5.84	
------	------	87898-1822	87898-1832	------	87898-1852	18	-----	2	45.72	43.18	10.81	9.65	5.84	
------	------	87898-1824	87898-1834	------	87898-1854	18	-----	4	45.72	43.18	10.81	9.65	5.84	
------	------	87898-1825	87898-1835	------	87898-1855	18	-----	5	45.72	43.18	10.81	9.65	5.84	
------	------	87898-1826	87898-1836	------	87898-1856	18	-----	6	45.72	43.18	10.81	9.65	5.84	
------	------	87898-1827	87898-1837	------	87898-1857	18	-----	6	45.72	43.18	10.81	9.65	5.84	B24

THIS DRAWING CONTAINS INFORMATION THAT IS PROPRIETARY TO MOLEX ELECTRONIC TECHNOLOGIES, LLC AND SHOULD NOT BE USED WITHOUT WRITTEN PERMISSION

DIMENSION UNITS	SCALE
mm	NTS

GENERAL TOLERANCES (UNLESS SPECIFIED)

	MM	INCH
4 PLACES	±	±
3 PLACES	±	±
2 PLACES	± 0.2	±
1 PLACE	±	±
0 PLACES	±	±
ANGULAR TOL	± 3.0 °	

DRAFT WHERE APPLICABLE MUST REMAIN WITHIN DIMENSIONS

CURRENT REV DESC: BRIGHT TIN PHASE OUT

EC NO: 679909
DRWN: AKUMAR19 2021/06/29
CHK'D: MRAMAKRISHNA 2021/10/11
APPR: MRAMAKRISHNA 2021/10/11

INITIAL REVISION:
DRWN: GGUNAGI 2016/11/09
APPR: ISHWARG 2016/12/06

THIRD ANGLE PROJECTION | DRAWING: A3-SIZE | SERIES: 87898

molex

CUSTOM HEADER
2.54MM PITCH SINGLE ROW SINGLE WAFER SMT HEADER

PRODUCT CUSTOMER DRAWING

DOCUMENT NUMBER	DOC TYPE	DOC PART	REVISION
SD-87898-001	PSD	000	B24

MATERIAL NUMBER	CUSTOMER	SHEET NUMBER
SEE TABLE	GENERAL MARKET	7 OF 21

DOCUMENT STATUS	P1	RELEASE DATE	2021/10/11 11:53:29

FORMAT: Met-lega-master-tb-prod-A3
REVISION: E
DATE: 2020/01/14

PACKAGING OPTION PART NO.						CKT SIZE	VOID POSITION	PLATING TYPE	DIMENSION				
TRAY WITHOUT CAP	TRAY WITH CAP	TUBE WITHOUT CAP	TUBE WITH CAP	TAPE & REEL WITHOUT CAP	TAPE & REEL WITH CAP				A	B	G	F	M
------	------	87898-1921	87898-1931	------	87898-1951	19	-----	1	48.26	45.72	10.81	9.65	5.84
------	------	87898-1922	87898-1932	------	87898-1952	19	-----	2	48.26	45.72	10.81	9.65	5.84
------	------	87898-1924	87898-1934	------	87898-1954	19	-----	4	48.26	45.72	10.81	9.65	5.84
------	------	87898-1925	87898-1935	------	87898-1955	19	-----	5	48.26	45.72	10.81	9.65	5.84
------	------	87898-1926	87898-1936	------	87898-1956	19	-----	6	48.26	45.72	10.81	9.65	5.84
------	------	87898-2021	87898-2031	------	87898-2051	20	-----	1	50.80	48.26	10.81	9.65	5.84
------	------	87898-2022	87898-2032	------	87898-2052	20	-----	2	50.80	48.26	10.81	9.65	5.84
------	------	87898-2024	87898-2034	------	87898-2054	20	-----	4	50.80	48.26	10.81	9.65	5.84
------	------	87898-2025	87898-2035	------	87898-2055	20	-----	5	50.80	48.26	10.81	9.65	5.84
------	------	87898-2026	87898-2036	------	87898-2056	20	-----	6	50.80	48.26	10.81	9.65	5.84
------	------	87898-2027	87898-2037	------	87898-2057	20	-----	6	50.80	48.26	10.81	9.65	5.84
------	------	87898-2121	87898-2131	------	87898-2151	21	-----	1	53.34	50.80	10.81	9.65	5.84
------	------	87898-2122	87898-2132	------	87898-2152	21	-----	2	53.34	50.80	10.81	9.65	5.84
------	------	87898-2124	87898-2134	------	87898-2154	21	-----	4	53.34	50.80	10.81	9.65	5.84
------	------	87898-2125	87898-2135	------	87898-2155	21	-----	5	53.34	50.80	10.81	9.65	5.84
------	------	87898-2126	87898-2136	------	87898-2156	21	-----	6	53.34	50.80	10.81	9.65	5.84

THIS DRAWING CONTAINS INFORMATION THAT IS PROPRIETARY TO MOLEX ELECTRONIC TECHNOLOGIES, LLC AND SHOULD NOT BE USED WITHOUT WRITTEN PERMISSION

DIMENSION UNITS	SCALE
mm	NTS

GENERAL TOLERANCES (UNLESS SPECIFIED)

	MM	INCH
4 PLACES	±	±
3 PLACES	±	±
2 PLACES	± 0.2	±
1 PLACE	±	±
0 PLACES	±	±
ANGULAR TOL	± 3.0 °	

DRAFT WHERE APPLICABLE MUST REMAIN WITHIN DIMENSIONS

CURRENT REV DESC: BRIGHT TIN PHASE OUT

EC NO: 679909
DRWN: AKUMAR19 2021/06/29
CHK'D: MRAMAKRISHNA 2021/10/11
APPR: MRAMAKRISHNA 2021/10/11

INITIAL REVISION:
DRWN: GGUNAGI 2016/11/09
APPR: ISHWARG 2016/12/06

molex

CUSTOM HEADER
2.54MM PITCH SINGLE ROW SINGLE WAFER SMT HEADER

PRODUCT CUSTOMER DRAWING

DOCUMENT NUMBER	DOC TYPE	DOC PART	REVISION
SD-87898-001	PSD	000	B24

THIRD ANGLE PROJECTION	DRAWING	SERIES	MATERIAL NUMBER	CUSTOMER	SHEET NUMBER
	A3-SIZE	87898	SEE TABLE	GENERAL MARKET	8 OF 21

DOCUMENT STATUS	P1	RELEASE DATE	2021/10/11 11:53:29

FORMAT: Met-lega-master-tb-prod-A3
REVISION: E
DATE: 2020/01/14

PACKAGING OPTION PART NO.						CKT SIZE	VOID POSITION	PLATING TYPE	DIMENSION				
TRAY WITHOUT CAP	TRAY WITH CAP	TUBE WITHOUT CAP	TUBE WITH CAP	TAPE & REEL WITHOUT CAP	TAPE & REEL WITH CAP				A	B	G	F	M
------	------	87898-2221	87898-2231	------	------	22	-----	1	55.88	53.34	10.81	9.65	5.84
------	------	87898-2222	87898-2232	------	------	22	-----	2	55.88	53.34	10.81	9.65	5.84
------	------	87898-2224	87898-2234	------	------	22	-----	4	55.88	53.34	10.81	9.65	5.84
------	------	87898-2225	87898-2235	------	------	22	-----	5	55.88	53.34	10.81	9.65	5.84
------	------	87898-2226	87898-2236	------	------	22	-----	6	55.88	53.34	10.81	9.65	5.84
------	------	87898-2321	87898-2331	------	------	23	-----	1	58.42	55.88	10.81	9.65	5.84
------	------	87898-2322	87898-2332	------	------	23	-----	2	58.42	55.88	10.81	9.65	5.84
------	------	87898-2324	87898-2334	------	------	23	-----	4	58.42	55.88	10.81	9.65	5.84
------	------	87898-2325	87898-2335	------	------	23	-----	5	58.42	55.88	10.81	9.65	5.84
------	------	87898-2326	87898-2336	------	------	23	-----	6	58.42	55.88	10.81	9.65	5.84
------	------	87898-2421	87898-2431	------	------	24	-----	1	60.96	58.42	10.81	9.65	5.84
------	------	87898-2422	87898-2432	------	------	24	-----	2	60.96	58.42	10.81	9.65	5.84
------	------	87898-2424	87898-2434	------	------	24	-----	4	60.96	58.42	10.81	9.65	5.84
------	------	87898-2425	87898-2435	------	------	24	-----	5	60.96	58.42	10.81	9.65	5.84
------	------	87898-2426	87898-2436	------	------	24	-----	6	60.96	58.42	10.81	9.65	5.84
------	------	87898-2427	87898-2437	------	------	24	-----	6	60.96	58.42	10.81	9.65	5.84

B24

THIS DRAWING CONTAINS INFORMATION THAT IS PROPRIETARY TO MOLEX ELECTRONIC TECHNOLOGIES, LLC AND SHOULD NOT BE USED WITHOUT WRITTEN PERMISSION

DIMENSION UNITS	SCALE
mm	NTS

GENERAL TOLERANCES (UNLESS SPECIFIED)

	MM	INCH
4 PLACES	±	±
3 PLACES	±	±
2 PLACES	± 0.2	±
1 PLACE	±	±
0 PLACES	±	±
ANGULAR TOL	± 3.0 °	

DRAFT WHERE APPLICABLE MUST REMAIN WITHIN DIMENSIONS

CURRENT REV DESC: BRIGHT TIN PHASE OUT

EC NO: 679909
DRWN: AKUMAR19 2021/06/29
CHK'D: MRAMAKRISHNA 2021/10/11
APPR: MRAMAKRISHNA 2021/10/11

INITIAL REVISION:
DRWN: GGUNAGI 2016/11/09
APPR: ISHWARG 2016/12/06

molex

CUSTOM HEADER
2.54MM PITCH SINGLE ROW SINGLE WAFER SMT HEADER

PRODUCT CUSTOMER DRAWING

DOCUMENT NUMBER	DOC TYPE	DOC PART	REVISION
SD-87898-001	PSD	000	B24

THIRD ANGLE PROJECTION	DRAWING	SERIES	MATERIAL NUMBER	CUSTOMER	SHEET NUMBER
	A3-SIZE	87898	SEE TABLE	GENERAL MARKET	9 OF 21

DOCUMENT STATUS	P1	RELEASE DATE	2021/10/11 11:53:29

FORMAT: Met-lega-master-tb-prod-A3
REVISION: E
DATE: 2020/01/14

PACKAGING OPTION PART NO.						CKT SIZE	VOID POSITION	PLATING TYPE	DIMENSION				
TRAY WITHOUT CAP	TRAY WITH CAP	TUBE WITHOUT CAP	TUBE WITH CAP	TAPE & REEL WITHOUT CAP	TAPE & REEL WITH CAP				A	B	G	F	M
------	------	87898-2521	87898-2531	------	------	25	-----	1	63.50	60.96	10.81	9.65	5.84
------	------	87898-2522	87898-2532	------	------	25	-----	2	63.50	60.96	10.81	9.65	5.84
------	------	87898-2524	87898-2534	------	------	25	-----	4	63.50	60.96	10.81	9.65	5.84
------	------	87898-2525	87898-2535	------	------	25	-----	5	63.50	60.96	10.81	9.65	5.84
------	------	87898-2526	87898-2536	------	------	25	-----	6	63.50	60.96	10.81	9.65	5.84
------	------	87898-2621	87898-2631	------	------	26	-----	1	66.04	63.50	10.81	9.65	5.84
------	------	87898-2622	87898-2632	------	------	26	-----	2	66.04	63.50	10.81	9.65	5.84
------	------	87898-2624	87898-2634	------	------	26	-----	4	66.04	63.50	10.81	9.65	5.84
------	------	87898-2625	87898-2635	------	------	26	-----	5	66.04	63.50	10.81	9.65	5.84
------	------	87898-2626	87898-2636	------	------	26	-----	6	66.04	63.50	10.81	9.65	5.84
------	------	87898-2627	87898-2637	------	------	26	-----	6	66.04	63.50	10.81	9.65	5.84
------	------	87898-2721	87898-2731	------	------	27	-----	1	68.58	66.04	10.81	9.65	5.84
------	------	87898-2722	87898-2732	------	------	27	-----	2	68.58	66.04	10.81	9.65	5.84
------	------	87898-2724	87898-2734	------	------	27	-----	4	68.58	66.04	10.81	9.65	5.84
------	------	87898-2725	87898-2735	------	------	27	-----	5	68.58	66.04	10.81	9.65	5.84
------	------	87898-2726	87898-2736	------	------	27	-----	6	68.58	66.04	10.81	9.65	5.84

B24

THIS DRAWING CONTAINS INFORMATION THAT IS PROPRIETARY TO MOLEX ELECTRONIC TECHNOLOGIES, LLC AND SHOULD NOT BE USED WITHOUT WRITTEN PERMISSION

DIMENSION UNITS	SCALE
mm	NTS

GENERAL TOLERANCES (UNLESS SPECIFIED)

	MM	INCH
4 PLACES	±	±
3 PLACES	±	±
2 PLACES	± 0.2	±
1 PLACE	±	±
0 PLACES	±	±
ANGULAR TOL	± 3.0 °	

DRAFT WHERE APPLICABLE MUST REMAIN WITHIN DIMENSIONS

CURRENT REV DESC: BRIGHT TIN PHASE OUT

EC NO: 679909
DRWN: AKUMAR19 2021/06/29
CHK'D: MRAMAKRISHNA 2021/10/11
APPR: MRAMAKRISHNA 2021/10/11

INITIAL REVISION:
DRWN: GGUNAGI 2016/11/09
APPR: ISHWARG 2016/12/06

molex

CUSTOM HEADER
2.54MM PITCH SINGLE ROW SINGLE WAFER SMT HEADER

PRODUCT CUSTOMER DRAWING

DOCUMENT NUMBER	DOC TYPE	DOC PART	REVISION
SD-87898-001	PSD	000	B24

THIRD ANGLE PROJECTION	DRAWING	SERIES	MATERIAL NUMBER	CUSTOMER	SHEET NUMBER
	A3-SIZE	87898	SEE TABLE	GENERAL MARKET	10 OF 21

DOCUMENT STATUS	P1	RELEASE DATE	2021/10/11 11:53:29

FORMAT: Met-lega-master-tb-prod-A3
REVISION: E
DATE: 2020/01/14

PACKAGING OPTION PART NO.						CKT SIZE	VOID POSITION	PLATING TYPE	DIMENSION				
TRAY WITHOUT CAP	TRAY WITH CAP	TUBE WITHOUT CAP	TUBE WITH CAP	TAPE & REEL WITHOUT CAP	TAPE & REEL WITH CAP				A	B	G	F	M
------	------	87898-2821	87898-2831	------	------	28	-----	1	71.12	68.58	10.81	9.65	5.84
------	------	87898-2822	87898-2832	------	------	28	-----	2	71.12	68.58	10.81	9.65	5.84
------	------	87898-2824	87898-2834	------	------	28	-----	4	71.12	68.58	10.81	9.65	5.84
------	------	87898-2825	87898-2835	------	------	28	-----	5	71.12	68.58	10.81	9.65	5.84
------	------	87898-2826	87898-2836	------	------	28	-----	6	71.12	68.58	10.81	9.65	5.84
------	------	87898-2921	87898-2931	------	------	29	-----	1	73.66	71.12	10.81	9.65	5.84
------	------	87898-2922	87898-2932	------	------	29	-----	2	73.66	71.12	10.81	9.65	5.84
------	------	87898-2924	87898-2934	------	------	29	-----	4	73.66	71.12	10.81	9.65	5.84
------	------	87898-2925	87898-2935	------	------	29	-----	5	73.66	71.12	10.81	9.65	5.84
------	------	87898-2926	87898-2936	------	------	29	-----	6	73.66	71.12	10.81	9.65	5.84
------	------	87898-3021	87898-3031	------	------	30	-----	1	76.20	73.66	10.81	9.65	5.84
------	------	87898-3022	87898-3032	------	------	30	-----	2	76.20	73.66	10.81	9.65	5.84
------	------	87898-3024	87898-3034	------	------	30	-----	4	76.20	73.66	10.81	9.65	5.84
------	------	87898-3025	87898-3035	------	------	30	-----	5	76.20	73.66	10.81	9.65	5.84
------	------	87898-3026	87898-3036	------	------	30	-----	6	76.20	73.66	10.81	9.65	5.84

THIS DRAWING CONTAINS INFORMATION THAT IS PROPRIETARY TO MOLEX ELECTRONIC TECHNOLOGIES, LLC AND SHOULD NOT BE USED WITHOUT WRITTEN PERMISSION

DIMENSION UNITS	SCALE
mm	NTS

GENERAL TOLERANCES (UNLESS SPECIFIED)

	MM	INCH
4 PLACES	±	±
3 PLACES	±	±
2 PLACES	± 0.2	±
1 PLACE	±	±
0 PLACES	±	±
ANGULAR TOL	± 3.0 °	

DRAFT WHERE APPLICABLE MUST REMAIN WITHIN DIMENSIONS

CURRENT REV DESC: BRIGHT TIN PHASE OUT

EC NO: 679909
DRWN: AKUMAR19 2021/06/29
CHK'D: MRAMAKRISHNA 2021/10/11
APPR: MRAMAKRISHNA 2021/10/11

INITIAL REVISION:
DRWN: GGUNAGI 2016/11/09
APPR: ISHWARG 2016/12/06

molex

CUSTOM HEADER
2.54MM PITCH SINGLE ROW SINGLE WAFER SMT HEADER

PRODUCT CUSTOMER DRAWING

DOCUMENT NUMBER	DOC TYPE	DOC PART	REVISION
SD-87898-001	PSD	000	B24

THIRD ANGLE PROJECTION	DRAWING	SERIES	MATERIAL NUMBER	CUSTOMER	SHEET NUMBER
	A3-SIZE	87898	SEE TABLE	GENERAL MARKET	11 OF 21

DOCUMENT STATUS	P1	RELEASE DATE	2021/10/11 11:53:29

FORMAT: Met-lega-master-tb-prod-A3
REVISION: E
DATE: 2020/01/14

PACKAGING OPTION PART NO.						CKT SIZE	VOID POSITION	PLATING TYPE	DIMENSION				
TRAY WITHOUT CAP	TRAY WITH CAP	TUBE WITHOUT CAP	TUBE WITH CAP	TAPE & REEL WITHOUT CAP	TAPE & REEL WITH CAP				A	B	G	F	M
------	------	87898-3121	87898-3131	------	------	31	-----	1	78.74	76.20	10.81	9.65	5.84
------	------	87898-3122	87898-3132	------	------	31	-----	2	78.74	76.20	10.81	9.65	5.84
------	------	87898-3124	87898-3134	------	------	31	-----	4	78.74	76.20	10.81	9.65	5.84
------	------	87898-3125	87898-3135	------	------	31	-----	5	78.74	76.20	10.81	9.65	5.84
------	------	87898-3126	87898-3136	------	------	31	-----	6	78.74	76.20	10.81	9.65	5.84
------	------	87898-3221	87898-3231	------	------	32	-----	1	81.28	78.74	10.81	9.65	5.84
------	------	87898-3222	87898-3232	------	------	32	-----	2	81.28	78.74	10.81	9.65	5.84
------	------	87898-3224	87898-3234	------	------	32	-----	4	81.28	78.74	10.81	9.65	5.84
------	------	87898-3225	87898-3235	------	------	32	-----	5	81.28	78.74	10.81	9.65	5.84
------	------	87898-3226	87898-3236	------	------	32	-----	6	81.28	78.74	10.81	9.65	5.84
------	------	87898-3227	87898-3237	------	------	32	-----	6	81.28	78.74	10.81	9.65	5.84
------	------	87898-3321	87898-3331	------	------	33	-----	1	83.82	81.28	10.81	9.65	5.84
------	------	87898-3322	87898-3332	------	------	33	-----	2	83.82	81.28	10.81	9.65	5.84
------	------	87898-3324	87898-3334	------	------	33	-----	4	83.82	81.28	10.81	9.65	5.84
------	------	87898-3325	87898-3335	------	------	33	-----	5	83.82	81.28	10.81	9.65	5.84
------	------	87898-3326	87898-3336	------	------	33	-----	6	83.82	81.28	10.81	9.65	5.84

B24

THIS DRAWING CONTAINS INFORMATION THAT IS PROPRIETARY TO MOLEX ELECTRONIC TECHNOLOGIES, LLC AND SHOULD NOT BE USED WITHOUT WRITTEN PERMISSION

DIMENSION UNITS	SCALE
mm	NTS

GENERAL TOLERANCES (UNLESS SPECIFIED)

	MM	INCH
4 PLACES	±	±
3 PLACES	±	±
2 PLACES	± 0.2	±
1 PLACE	±	±
0 PLACES	±	±
ANGULAR TOL	± 3.0 °	

DRAFT WHERE APPLICABLE MUST REMAIN WITHIN DIMENSIONS

CURRENT REV DESC: BRIGHT TIN PHASE OUT

EC NO: 679909
DRWN: AKUMAR19 2021/06/29
CHK'D: MRAMAKRISHNA 2021/10/11
APPR: MRAMAKRISHNA 2021/10/11

INITIAL REVISION:
DRWN: GGUNAGI 2016/11/09
APPR: ISHWARG 2016/12/06

molex

CUSTOM HEADER
2.54MM PITCH SINGLE ROW SINGLE WAFER SMT HEADER

PRODUCT CUSTOMER DRAWING

DOCUMENT NUMBER	DOC TYPE	DOC PART	REVISION
SD-87898-001	PSD	000	B24

THIRD ANGLE PROJECTION	DRAWING	SERIES	MATERIAL NUMBER	CUSTOMER	SHEET NUMBER
	A3-SIZE	87898	SEE TABLE	GENERAL MARKET	12 OF 21

DOCUMENT STATUS	P1	RELEASE DATE	2021/10/11 11:53:29

FORMAT: Met-lega-master-tb-prod-A3
REVISION: E
DATE: 2020/01/14

PACKAGING OPTION PART NO.						CKT SIZE	VOID POSITION	PLATING TYPE	DIMENSION				
TRAY WITHOUT CAP	TRAY WITH CAP	TUBE WITHOUT CAP	TUBE WITH CAP	TAPE & REEL WITHOUT CAP	TAPE & REEL WITH CAP				A	B	G	F	M
------	------	87898-3421	87898-3431	------	------	34	-----	1	86.36	83.82	10.81	9.65	5.84
------	------	87898-3422	87898-3432	------	------	34	-----	2	86.36	83.82	10.81	9.65	5.84
------	------	87898-3424	87898-3434	------	------	34	-----	4	86.36	83.82	10.81	9.65	5.84
------	------	87898-3425	87898-3435	------	------	34	-----	5	86.36	83.82	10.81	9.65	5.84
------	------	87898-3426	87898-3436	------	------	34	-----	6	86.36	83.82	10.81	9.65	5.84
------	------	87898-3521	87898-3531	------	------	35	-----	1	88.90	86.36	10.81	9.65	5.84
------	------	87898-3522	87898-3532	------	------	35	-----	2	88.90	86.36	10.81	9.65	5.84
------	------	87898-3524	87898-3534	------	------	35	-----	4	88.90	86.36	10.81	9.65	5.84
------	------	87898-3525	87898-3535	------	------	35	-----	5	88.90	86.36	10.81	9.65	5.84
------	------	87898-3526	87898-3536	------	------	35	-----	6	88.90	86.36	10.81	9.65	5.84
------	------	87898-3621	87898-3631	------	------	36	-----	1	91.44	88.90	10.81	9.65	5.84
------	------	87898-3622	87898-3632	------	------	36	-----	2	91.44	88.90	10.81	9.65	5.84
------	------	87898-3624	87898-3634	------	------	36	-----	4	91.44	88.90	10.81	9.65	5.84
------	------	87898-3625	87898-3635	------	------	36	-----	5	91.44	88.90	10.81	9.65	5.84
------	------	87898-3626	87898-3636	------	------	36	-----	6	91.44	88.90	10.81	9.65	5.84

THIS DRAWING CONTAINS INFORMATION THAT IS PROPRIETARY TO MOLEX ELECTRONIC TECHNOLOGIES, LLC AND SHOULD NOT BE USED WITHOUT WRITTEN PERMISSION

DIMENSION UNITS	SCALE
mm	NTS

GENERAL TOLERANCES (UNLESS SPECIFIED)

	MM	INCH
4 PLACES	±	±
3 PLACES	±	±
2 PLACES	± 0.2	±
1 PLACE	±	±
0 PLACES	±	±
ANGULAR TOL	± 3.0 °	

DRAFT WHERE APPLICABLE MUST REMAIN WITHIN DIMENSIONS

CURRENT REV DESC: BRIGHT TIN PHASE OUT

EC NO: 679909
DRWN: AKUMAR19 2021/06/29
CHK'D: MRAMAKRISHNA 2021/10/11
APPR: MRAMAKRISHNA 2021/10/11

INITIAL REVISION:
DRWN: GGUNAGI 2016/11/09
APPR: ISHWARG 2016/12/06

molex

CUSTOM HEADER
2.54MM PITCH SINGLE ROW SINGLE WAFER SMT HEADER

PRODUCT CUSTOMER DRAWING

DOCUMENT NUMBER	DOC TYPE	DOC PART	REVISION
SD-87898-001	PSD	000	B24

THIRD ANGLE PROJECTION	DRAWING	SERIES	MATERIAL NUMBER	CUSTOMER	SHEET NUMBER
	A3-SIZE	87898	SEE TABLE	GENERAL MARKET	13 OF 21

DOCUMENT STATUS	P1	RELEASE DATE	2021/10/11 11:53:29

FORMAT: Met-lega-master-tb-prod-A3
REVISION: E
DATE: 2020/01/14

PACKAGING OPTION PART NO.						CKT SIZE	VOID POSITION	PLATING TYPE	DIMENSION				
TRAY WITHOUT CAP	TRAY WITH CAP	TUBE WITHOUT CAP	TUBE WITH CAP	TAPE & REEL WITHOUT CAP	TAPE & REEL WITH CAP				A	B	G	F	M
------	------	87898-3721	87898-3731	------	------	37	-----	1	93.98	91.44	10.81	9.65	5.84
------	------	87898-3722	87898-3732	------	------	37	-----	2	93.98	91.44	10.81	9.65	5.84
------	------	87898-3724	87898-3734	------	------	37	-----	4	93.98	91.44	10.81	9.65	5.84
------	------	87898-3725	87898-3735	------	------	37	-----	5	93.98	91.44	10.81	9.65	5.84
------	------	87898-3726	87898-3736	------	------	37	-----	6	93.98	91.44	10.81	9.65	5.84
------	------	87898-3821	87898-3831	------	------	38	-----	1	96.52	93.98	10.81	9.65	5.84
------	------	87898-3822	87898-3832	------	------	38	-----	2	96.52	93.98	10.81	9.65	5.84
------	------	87898-3824	87898-3834	------	------	38	-----	4	96.52	93.98	10.81	9.65	5.84
------	------	87898-3825	87898-3835	------	------	38	-----	5	96.52	93.98	10.81	9.65	5.84
------	------	87898-3826	87898-3836	------	------	38	-----	6	96.52	93.98	10.81	9.65	5.84
------	------	87898-3921	87898-3931	------	------	39	-----	1	99.06	96.52	10.81	9.65	5.84
------	------	87898-3922	87898-3932	------	------	39	-----	2	99.06	96.52	10.81	9.65	5.84
------	------	87898-3924	87898-3934	------	------	39	-----	4	99.06	96.52	10.81	9.65	5.84
------	------	87898-3925	87898-3935	------	------	39	-----	5	99.06	96.52	10.81	9.65	5.84
------	------	87898-3926	87898-3936	------	------	39	-----	6	99.06	96.52	10.81	9.65	5.84

THIS DRAWING CONTAINS INFORMATION THAT IS PROPRIETARY TO MOLEX ELECTRONIC TECHNOLOGIES, LLC AND SHOULD NOT BE USED WITHOUT WRITTEN PERMISSION

DIMENSION UNITS	SCALE
mm	NTS

GENERAL TOLERANCES (UNLESS SPECIFIED)

	MM	INCH
4 PLACES	±	±
3 PLACES	±	±
2 PLACES	± 0.2	±
1 PLACE	±	±
0 PLACES	±	±
ANGULAR TOL	± 3.0 °	

DRAFT WHERE APPLICABLE MUST REMAIN WITHIN DIMENSIONS

CURRENT REV DESC: BRIGHT TIN PHASE OUT

EC NO: 679909
DRWN: AKUMAR19 2021/06/29
CHK'D: MRAMAKRISHNA 2021/10/11
APPR: MRAMAKRISHNA 2021/10/11

INITIAL REVISION:
DRWN: GGUNAGI 2016/11/09
APPR: ISHWARG 2016/12/06

molex

CUSTOM HEADER
2.54MM PITCH SINGLE ROW SINGLE WAFER SMT HEADER

PRODUCT CUSTOMER DRAWING

DOCUMENT NUMBER	DOC TYPE	DOC PART	REVISION
SD-87898-001	PSD	000	B24

THIRD ANGLE PROJECTION	DRAWING	SERIES	MATERIAL NUMBER	CUSTOMER	SHEET NUMBER
	A3-SIZE	87898	SEE TABLE	GENERAL MARKET	14 OF 21

DOCUMENT STATUS	P1	RELEASE DATE	2021/10/11 11:53:29

FORMAT: Met-lega-master-tb-prod-A3
REVISION: E
DATE: 2020/01/14

PACKAGING OPTION PART NO.						CKT SIZE	VOID POSITION	PLATING TYPE	DIMENSION				
TRAY WITHOUT CAP	TRAY WITH CAP	TUBE WITHOUT CAP	TUBE WITH CAP	TAPE & REEL WITHOUT CAP	TAPE & REEL WITH CAP				A	B	G	F	M
------	------	87898-4021	87898-4031	------	------	40	-----	1	101.60	99.06	10.81	9.65	5.84
------	------	87898-4022	87898-4032	------	------	40	-----	2	101.60	99.06	10.81	9.65	5.84
------	------	87898-4024	87898-4034	------	------	40	-----	4	101.60	99.06	10.81	9.65	5.84
------	------	87898-4025	87898-4035	------	------	40	-----	5	101.60	99.06	10.81	9.65	5.84
------	------	87898-4026	87898-4036	------	------	40	-----	6	101.60	99.06	10.81	9.65	5.84

THIS DRAWING CONTAINS INFORMATION THAT IS PROPRIETARY TO MOLEX ELECTRONIC TECHNOLOGIES, LLC AND SHOULD NOT BE USED WITHOUT WRITTEN PERMISSION

DIMENSION UNITS	SCALE
mm	NTS

GENERAL TOLERANCES (UNLESS SPECIFIED)

	MM	INCH
4 PLACES	±	±
3 PLACES	±	±
2 PLACES	± 0.2	±
1 PLACE	±	±
0 PLACES	±	±
ANGULAR TOL	± 3.0 °	

DRAFT WHERE APPLICABLE MUST REMAIN WITHIN DIMENSIONS

CURRENT REV DESC: BRIGHT TIN PHASE OUT

EC NO: 679909
DRWN: AKUMAR19 2021/06/29
CHK'D: MRAMAKRISHNA 2021/10/11
APPR: MRAMAKRISHNA 2021/10/11

INITIAL REVISION:
DRWN: GGUNAGI 2016/11/09
APPR: ISHWARG 2016/12/06

THIRD ANGLE PROJECTION | DRAWING: A3-SIZE | SERIES: 87898

molex

CUSTOM HEADER
2.54MM PITCH SINGLE ROW SINGLE WAFER SMT HEADER

PRODUCT CUSTOMER DRAWING

DOCUMENT NUMBER	DOC TYPE	DOC PART	REVISION
SD-87898-001	PSD	000	B24

MATERIAL NUMBER	CUSTOMER	SHEET NUMBER
SEE TABLE	GENERAL MARKET	15 OF 21

DOCUMENT STATUS	P1	RELEASE DATE	2021/10/11 11:53:29

FORMAT: Met-lega-master-tb-prod-A3
REVISION: E
DATE: 2020/01/14

CAP ORIENTATION (CAP P/N: 87938-0001)

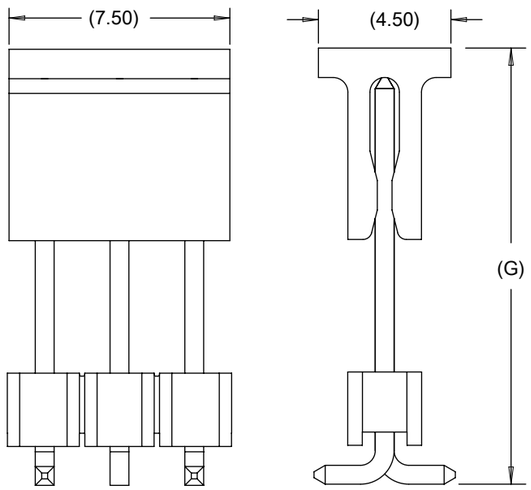

FOR ILLUSTRATION OF EVEN CKT
(6 CKT AS SHOWN)

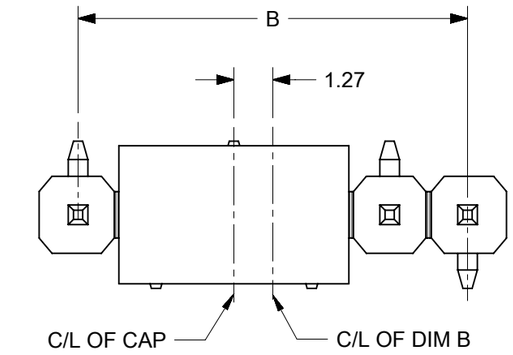

C/L OF DIM B IS OFFSET BY 1.27MM WITH C/L OF CAP
(FOR EVEN CKT)

FOR ILLUSTRATION OF ODD CKT
(7 CKT AS SHOWN)

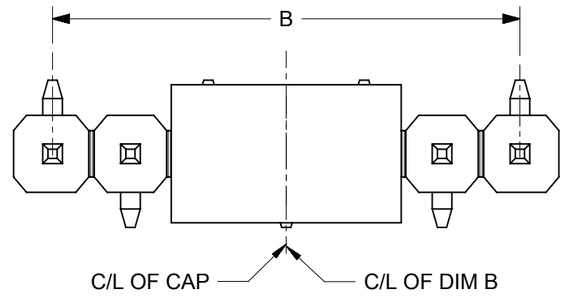

C/L OF DIM B = C/L OF CAP
(FOR ODD CKT)

CAP ORIENTATION (CAP P/N: 87898-1000)

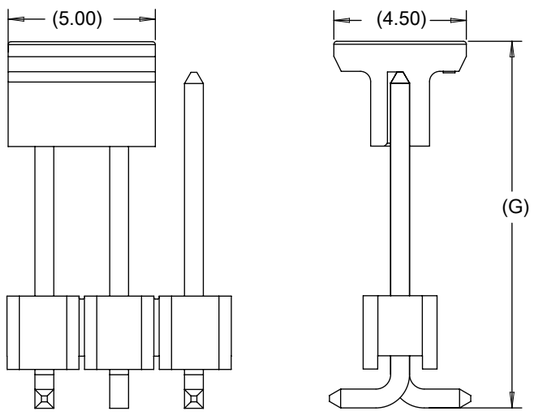

FOR ILLUSTRATION OF ODD CKT
(5CKT AS SHOWN)

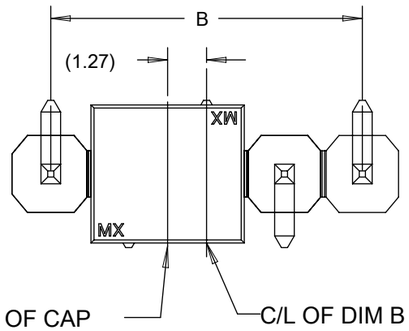

C/L OF DIM B IS OFFSET BY 1.27MM WITH C/L OF CAP
(FOR ODD CKT)

FOR ILLUSTRATION OF EVEN CKT
(4CKT AS SHOWN)

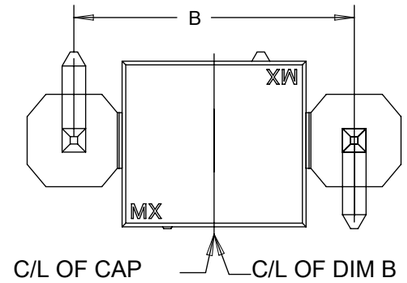

C/L OF DIM B = C/L OF CAP
(FOR EVEN CKT)

PART ORIENTATION IN TUBE

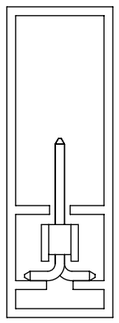

PART WITHOUT CAP

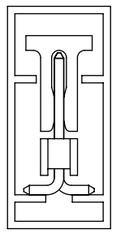

PART WITH CAP

THIS DRAWING CONTAINS INFORMATION THAT IS PROPRIETARY TO MOLEX ELECTRONIC TECHNOLOGIES, LLC AND SHOULD NOT BE USED WITHOUT WRITTEN PERMISSION

DIMENSION UNITS	SCALE
mm	NTS

GENERAL TOLERANCES (UNLESS SPECIFIED)

	MM	INCH
4 PLACES	±	±
3 PLACES	±	±
2 PLACES	± 0.2	±
1 PLACE	±	±
0 PLACES	±	±
ANGULAR TOL	± 3.0 °	

DRAFT WHERE APPLICABLE MUST REMAIN WITHIN DIMENSIONS

CURRENT REV DESC: BRIGHT TIN PHASE OUT

EC NO: 679909
DRWN: AKUMAR19 2021/06/29
CHK'D: MRAMAKRISHNA 2021/10/11
APPR: MRAMAKRISHNA 2021/10/11

INITIAL REVISION:
DRWN: GGUNAGI 2016/11/09
APPR: ISHWARG 2016/12/06

THIRD ANGLE PROJECTION | DRAWING: A3-SIZE | SERIES: 87898

molex

CUSTOM HEADER
2.54MM PITCH SINGLE ROW SINGLE WAFER SMT HEADER

PRODUCT CUSTOMER DRAWING

DOCUMENT NUMBER	DOC TYPE	DOC PART	REVISION
SD-87898-001	PSD	000	B24

MATERIAL NUMBER	CUSTOMER	SHEET NUMBER
SEE TABLE	GENERAL MARKET	16 OF 21

DOCUMENT STATUS	P1	RELEASE DATE	2021/10/11 11:53:29

FORMAT: Met-lega-master-tb-prod-A3
REVISION: E
DATE: 2020/01/14

EMBOSSED CARRIER TYPE 'A'

CKT	DIMENSION				
	Bo	Ao	Ko	F	W
2	8.02	5.20	13.60	11.50	24.00
3	8.02	5.20	13.60	11.50	24.00
4	10.55	5.20	13.60	11.50	24.00

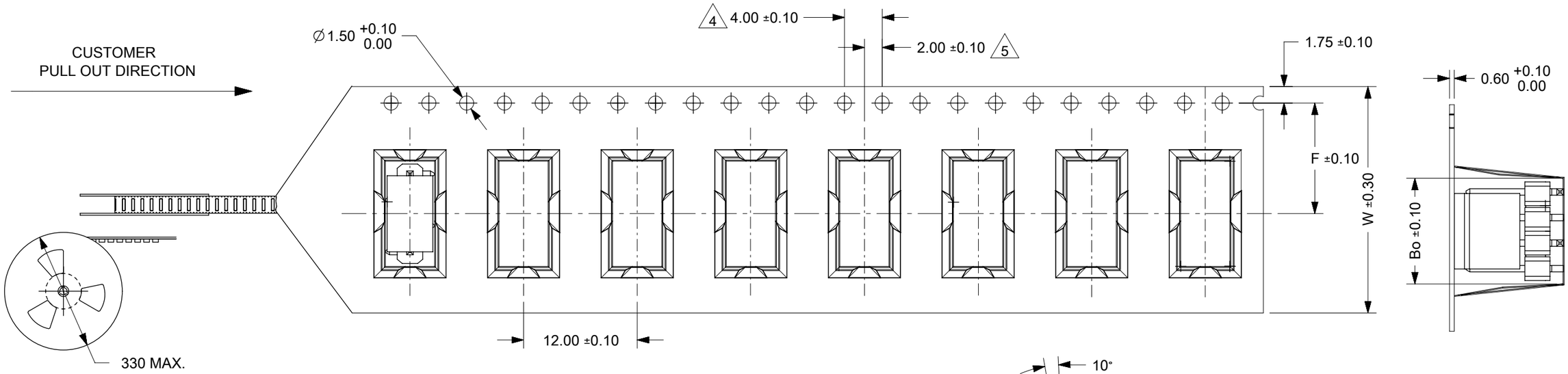

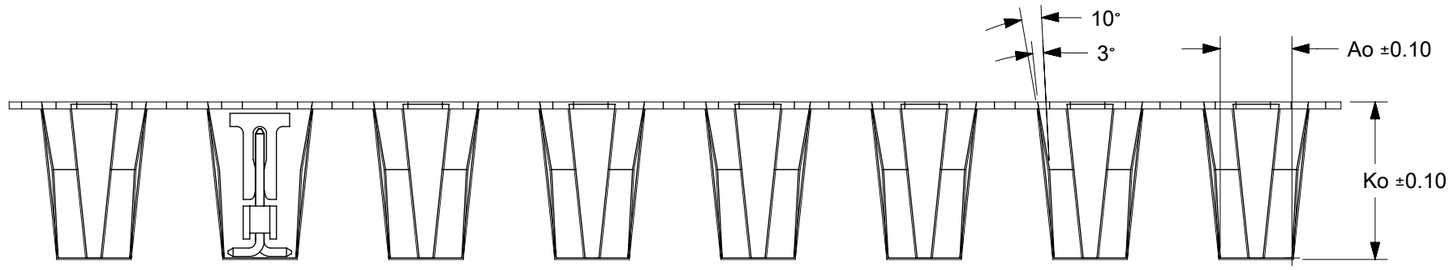

PART PACK
IN E/TAPE
ORIENTATION
(FOR REF USE)

NOTES:

1. LEADER AND TRAILER TAPE

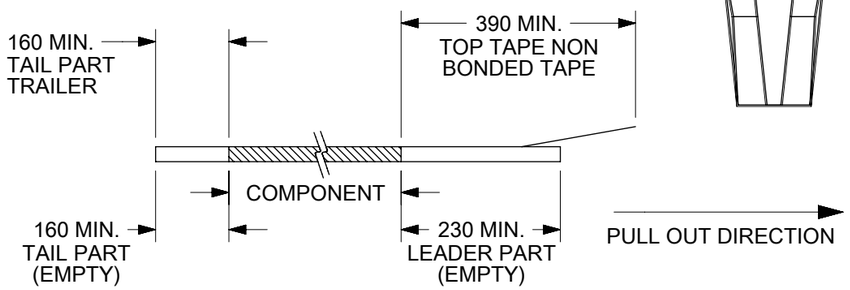

2. PEELING OFF FORCE OF THE TOP TAPE: 20 - 80gf.
   (PEELING DIRECTION AS SHOWN IN FOLLOWING FIGURE)

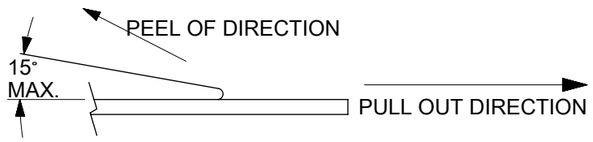

3. MATERIAL: BLACK P.S CONDUCTIVE, BLACK

4 MEASURED FROM CENTRELINE OF SPROCKET HOLE
TO CENTRELINE OF SPOCKET

5 CUMULATIVE TOLERANCE OF 10 SPROCKET HOLE IS ±0.20mm

6. A0 AND B0 ARE MEASURE FROM ABOVE POCKET BASE 0.30mm
7. TAPE AND REEL SPECIFICATION IS AS PER EIA-481.
8. TAPE AND REEL QUANTITY : 440PCS/REEL
9. THE TAPE IS TREATED FOR ANTI-STATIC.
10. ALL RADIUS ARE 0.30MM UNLESS SPECIFY
11. SURFACE RESISTIVITY 10^3 TO 10 OHMS.

THIS DRAWING CONTAINS INFORMATION THAT IS PROPRIETARY TO MOLEX ELECTRONIC TECHNOLOGIES, LLC AND SHOULD NOT BE USED WITHOUT WRITTEN PERMISSION

DIMENSION UNITS	SCALE
mm	NTS

GENERAL TOLERANCES (UNLESS SPECIFIED)

	MM	INCH
4 PLACES	±	±
3 PLACES	±	±
2 PLACES	± 0.2	±
1 PLACE	±	±
0 PLACES	±	±
ANGULAR TOL	± 3.0 °	

DRAFT WHERE APPLICABLE MUST REMAIN WITHIN DIMENSIONS

CURRENT REV DESC: BRIGHT TIN PHASE OUT

EC NO: 679909
DRWN: AKUMAR19 2021/06/29
CHK'D: MRAMAKRISHNA 2021/10/11
APPR: MRAMAKRISHNA 2021/10/11

INITIAL REVISION:
DRWN: GGUNAGI 2016/11/09
APPR: ISHWARG 2016/12/06

THIRD ANGLE PROJECTION | DRAWING: A3-SIZE | SERIES: 87898

molex

CUSTOM HEADER
2.54MM PITCH SINGLE ROW SINGLE WAFER SMT HEADER

PRODUCT CUSTOMER DRAWING

DOCUMENT NUMBER	DOC TYPE	DOC PART	REVISION
SD-87898-001	PSD	000	B24

MATERIAL NUMBER	CUSTOMER	SHEET NUMBER
SEE TABLE	GENERAL MARKET	17 OF 21

DOCUMENT STATUS	P1	RELEASE DATE	2021/10/11 11:53:29

FORMAT: Met-lega-master-lb-prod-A3
REVISION: E
DATE: 2020/01/14

CKT	DIMENSION				
	Bo	Ao	Ko	F	W
5	13.10	5.20	11.30	11.50	24.00

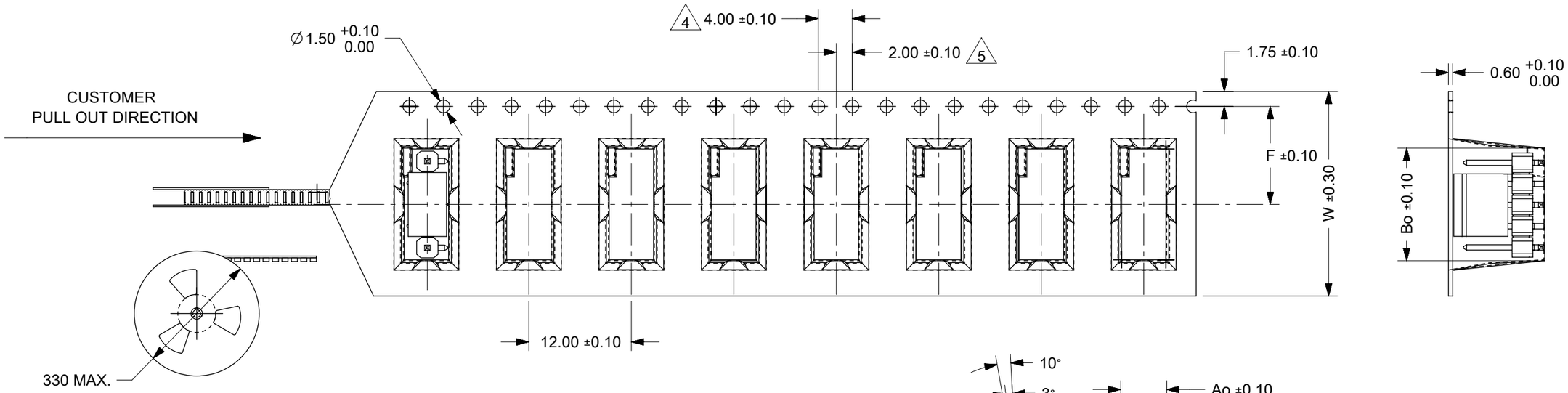

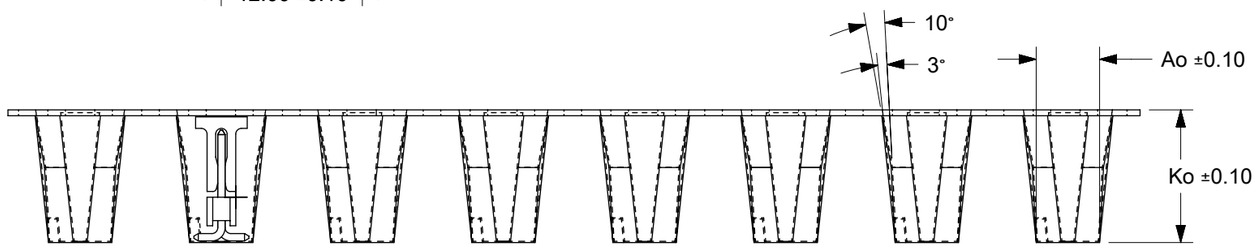

NOTES:

1. LEADER AND TRAILER TAPE

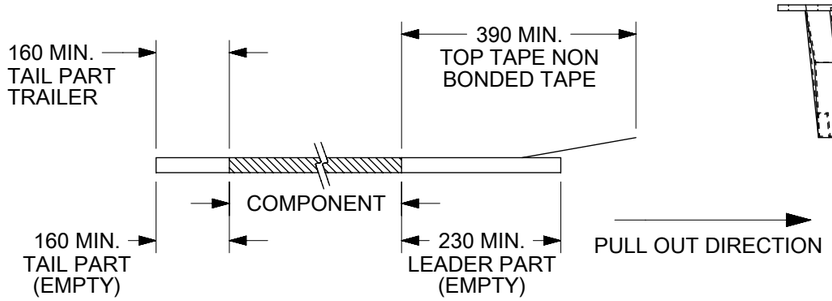

PART PACK
IN E/TAPE
ORIENTATION
(FOR REF USE)

2. PEELING OFF FORCE OF THE TOP TAPE: 20 - 80gf.
   (PEELING DIRECTION AS SHOWN IN FOLLOWING FIGURE)

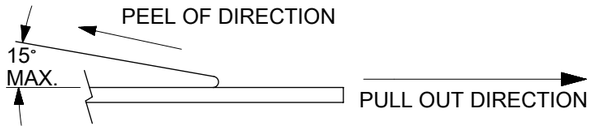

3. MATERIAL: BLACK P.S CONDUCTIVE, BLACK
4. MEASURED FROM CENTRELINE OF SPROCKET HOLE TO CENTRELINE OF SPOCKET
5. CUMULATIVE TOLERANCE OF 10 SPROCKET HOLE IS ±0.20mm
6. A0 AND B0 ARE MEASURE FROM ABOVE POCKET BASE 0.30mm
7. TAPE AND REEL SPECIFICATION IS AS PER EIA-481.
8. TAPE AND REEL QUANTITY : 440PCS/REEL
9. THE TAPE IS TREATED FOR ANTI-STATIC.
10. ALL RADIUS ARE 0.30MM UNLESS SPECIFY
11. SURFACE RESISTIVITY 10^3 TO 10 OHMS.

THIS DRAWING CONTAINS INFORMATION THAT IS PROPRIETARY TO MOLEX ELECTRONIC TECHNOLOGIES, LLC AND SHOULD NOT BE USED WITHOUT WRITTEN PERMISSION

DIMENSION UNITS	SCALE
mm	NTS

GENERAL TOLERANCES (UNLESS SPECIFIED)

	MM	INCH
4 PLACES	±	±
3 PLACES	±	±
2 PLACES	± 0.2	±
1 PLACE	±	±
0 PLACES	±	±
ANGULAR TOL	± 3.0 °	

DRAFT WHERE APPLICABLE MUST REMAIN WITHIN DIMENSIONS

CURRENT REV DESC: BRIGHT TIN PHASE OUT

EC NO: 679909
DRWN: AKUMAR19 2021/06/29
CHK'D: MRAMAKRISHNA 2021/10/11
APPR: MRAMAKRISHNA 2021/10/11

INITIAL REVISION:
DRWN: GGUNAGI 2016/11/09
APPR: ISHWARG 2016/12/06

molex

CUSTOM HEADER
2.54MM PITCH SINGLE ROW SINGLE WAFER SMT HEADER

PRODUCT CUSTOMER DRAWING

DOCUMENT NUMBER	DOC TYPE	DOC PART	REVISION
SD-87898-001	PSD	000	B24

THIRD ANGLE PROJECTION	DRAWING	SERIES	MATERIAL NUMBER	CUSTOMER	SHEET NUMBER
	A3-SIZE	87898	SEE TABLE	GENERAL MARKET	18 OF 21

DOCUMENT STATUS	P1	RELEASE DATE	2021/10/11 11:53:29

FORMAT: Met-lega-master-lb-prod-A3
REVISION: E
DATE: 2020/01/14

CKT	DIMENSION							TYPE	QTY/ REEL
	M	Bo	So	Ao	Ko	F	W		
6	11.50	15.65	28.40	5.20	16.90	14.20	32.00	A	150
6	5.84	15.65	28.40	5.20	11.30	14.20	32.00	B	440
8		20.70	40.40	5.20	11.30	20.20	44.00		
10		25.80	40.40	5.20	11.30	20.20	44.00		
12		30.90	52.40	5.20	11.30	26.20	56.00		
14		35.95	52.40	5.20	11.30	26.20	56.00		
16		41.05	52.40	5.20	11.30	26.20	56.00		
18		46.20	68.40	5.20	11.30	34.20	72.00		
20		51.20	68.40	5.20	11.30	34.20	72.00		

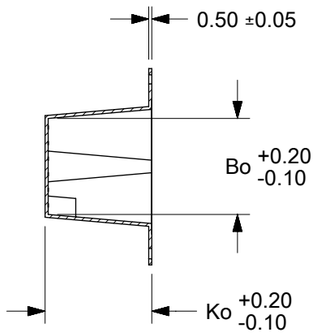

TYPE A

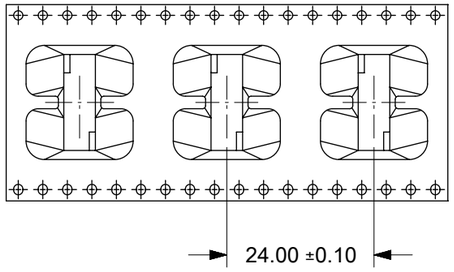

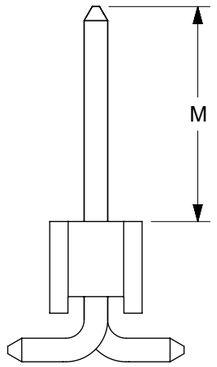

FOR ILLUSTRATION ONLY

TYPE B

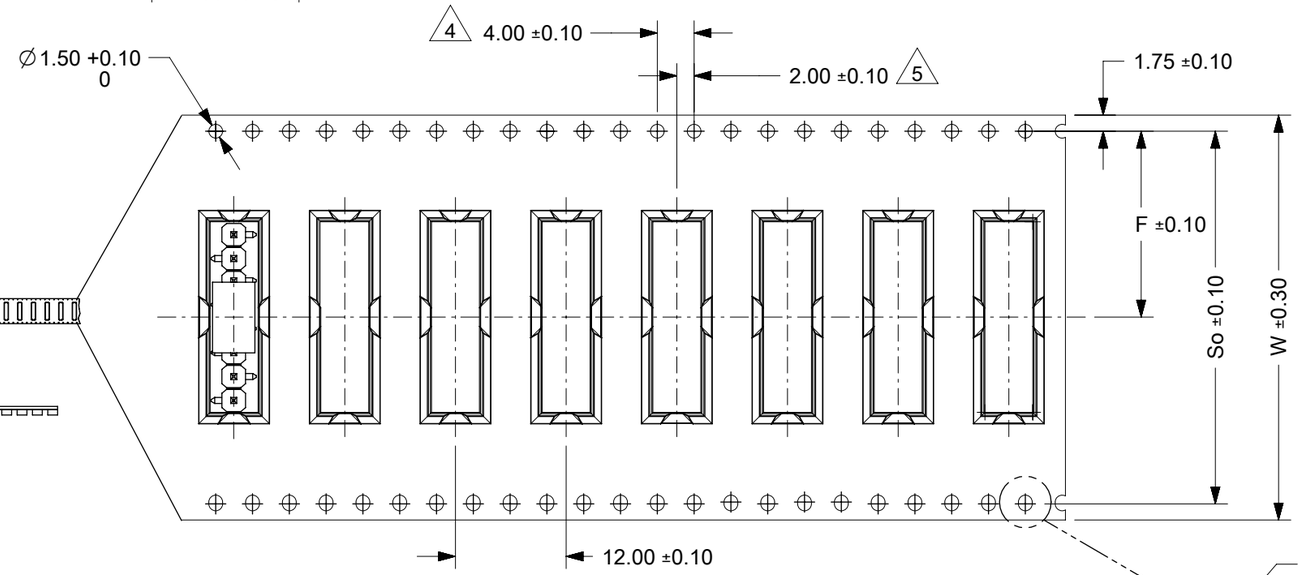

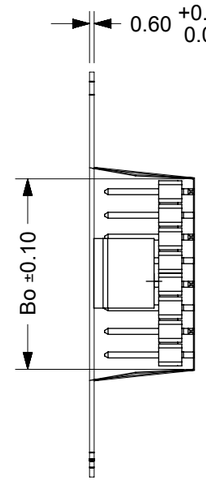

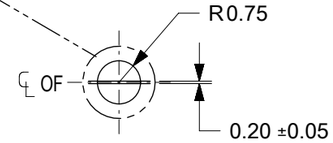

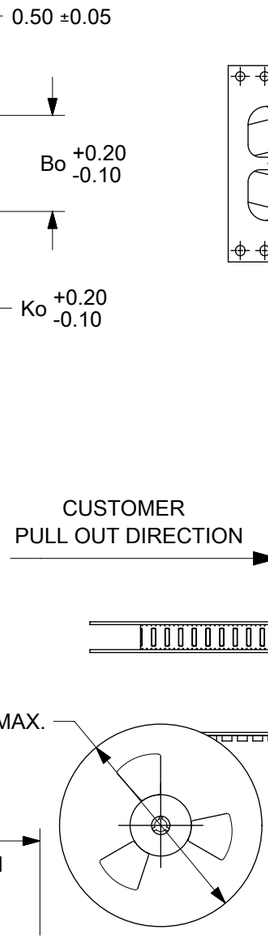

NOTES:

1. LEADER AND TRAILER TAPE

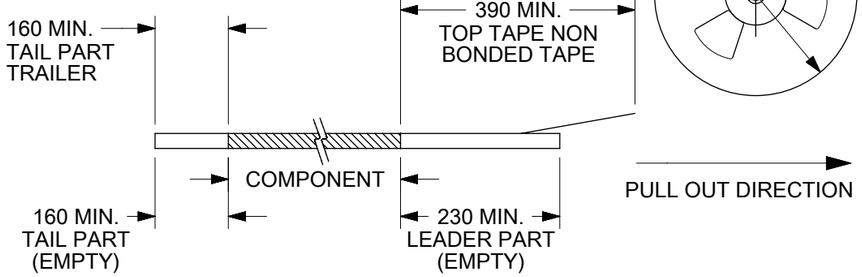

2. PEELING OFF FORCE OF THE TOP TAPE: 20 - 80gf.
   (PEELING DIRECTION AS SHOWN IN FOLLOWING FIGURE)

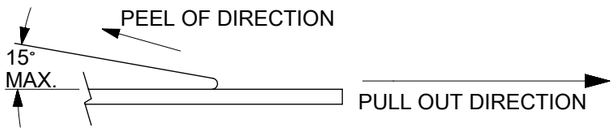

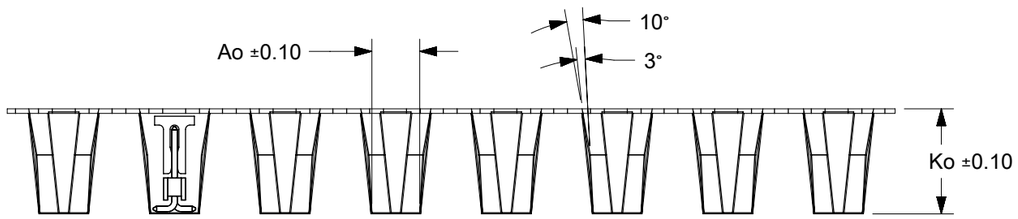

PART PACK IN E/TAPE
ORIENTATION(FOR REF USE)

3. MATERIAL: BLACK P.S CONDUCTIVE, BLACK
4. MEASURED FROM CENTRELINE OF SPROCKET HOLE TO CENTRELINE OF SPOCKET
5. CUMULATIVE TOLERANCE OF 10 SPROCKET HOLE IS ±0.20mm
6. A0 AND B0 ARE MEASURE FROM ABOVE POCKET BASE 0.30mm
7. TAPE AND REEL SPECIFICATION IS AS PER EIA-481.
8. TAPE AND REEL QUANTITY : SEE TABLE
9. THE TAPE IS TREATED FOR ANTI-STATIC.
10. ALL RADIUS ARE 0.30MM UNLESS SPECIFY
11. SURFACE RESISTIVITY 10^3 TO 10 OHMS.

THIS DRAWING CONTAINS INFORMATION THAT IS PROPRIETARY TO MOLEX ELECTRONIC TECHNOLOGIES, LLC AND SHOULD NOT BE USED WITHOUT WRITTEN PERMISSION

DIMENSION UNITS	SCALE
mm	NTS

GENERAL TOLERANCES (UNLESS SPECIFIED)

	MM	INCH
4 PLACES	±	±
3 PLACES	±	±
2 PLACES	± 0.2	±
1 PLACE	±	±
0 PLACES	±	±
ANGULAR TOL	± 3.0 °	

DRAFT WHERE APPLICABLE MUST REMAIN WITHIN DIMENSIONS

CURRENT REV DESC: BRIGHT TIN PHASE OUT

EC NO: 679909
DRWN: AKUMAR19 2021/06/29
CHK'D: MRAMAKRISHNA 2021/10/11
APPR: MRAMAKRISHNA 2021/10/11

INITIAL REVISION:
DRWN: GGUNAGI 2016/11/09
APPR: ISHWARG 2016/12/06

molex

CUSTOM HEADER
2.54MM PITCH SINGLE ROW SINGLE WAFER SMT HEADER

PRODUCT CUSTOMER DRAWING

DOCUMENT NUMBER	DOC TYPE	DOC PART	REVISION
SD-87898-001	PSD	000	B24

THIRD ANGLE PROJECTION	DRAWING	SERIES	MATERIAL NUMBER	CUSTOMER	SHEET NUMBER
	A3-SIZE	87898	SEE TABLE	GENERAL MARKET	19 OF 21

DOCUMENT STATUS	P1	RELEASE DATE	2021/10/11 11:53:29

FORMAT: Met-lega-master-tb-prod-A3
REVISION: E
DATE: 2020/01/14

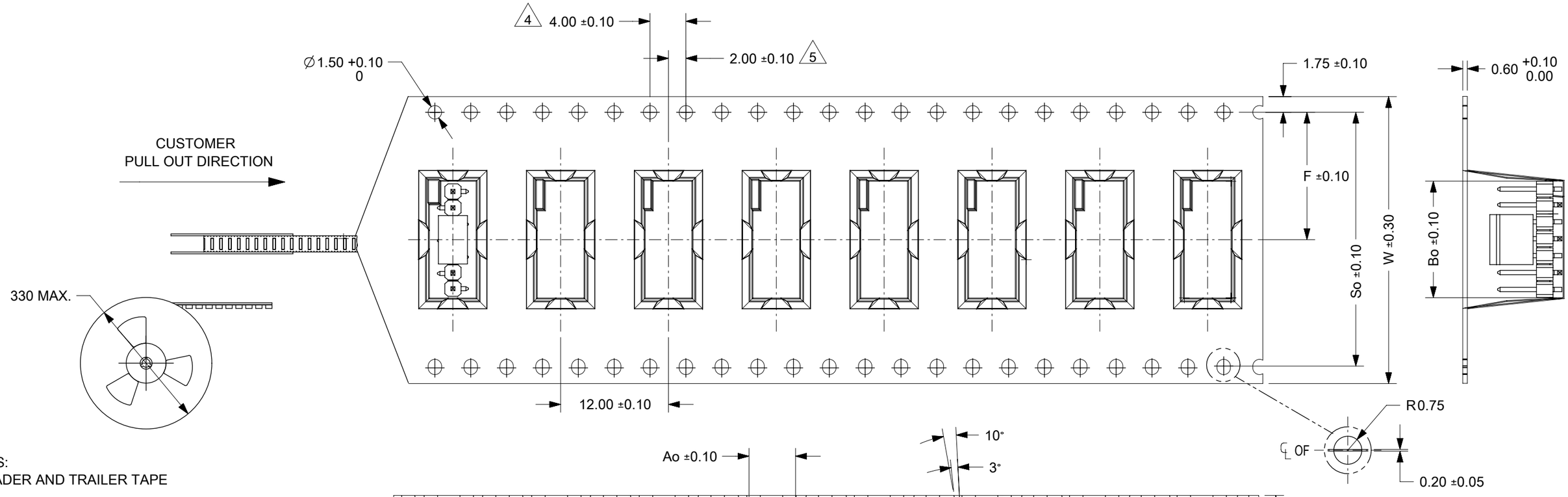

NOTES:

1. LEADER AND TRAILER TAPE

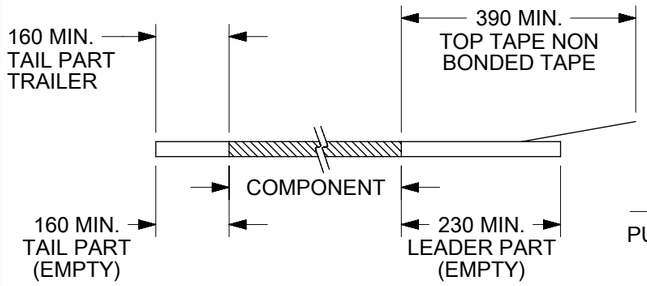

PULL OUT DIRECTION

PART PACK
IN E/TAPE
ORIENTATION
(FOR REF USE)

CKT	DIMENSION					
	Bo	So	Ao	Ko	F	W
7	18.20	40.40	5.20	11.30	20.20	44.00
9	23.25	40.40	5.20	11.30	20.20	44.00
11	28.35	40.40	5.20	11.30	20.20	44.00
13	33.40	52.40	5.20	11.30	26.20	56.00
15	38.50	52.40	5.20	11.30	26.20	56.00
17	43.60	68.40	5.20	11.30	34.20	72.00
19	48.70	68.40	5.20	11.30	34.20	72.00
21	53.80	68.40	5.20	11.30	34.20	72.00

2. PEELING OFF FORCE OF THE TOP TAPE: 20 - 80gf.
   (PEELING DIRECTION AS SHOWN IN FOLLOWING FIGURE)

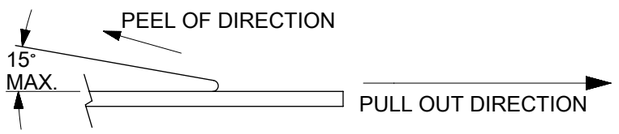

3. MATERIAL: BLACK P.S CONDUCTIVE, BLACK

4 MEASURED FROM CENTRELINE OF SPROCKET HOLE TO CENTRELINE OF SPOCKET

5 CUMULATIVE TOLERANCE OF 10 SPROCKET HOLE IS ±0.20mm

6. A0 AND B0 ARE MEASURE FROM ABOVE POCKET BASE 0.30mm
7. TAPE AND REEL SPECIFICATION IS AS PER EIA-481.
8. TAPE AND REEL QUANTITY : 440PCS/REEL
9. THE TAPE IS TREATED FOR ANTI-STATIC.
10. ALL RADIUS ARE 0.30MM UNLESS SPECIFY
11. SURFACE RESISTIVITY 10^3 TO 10 OHMS.

THIS DRAWING CONTAINS INFORMATION THAT IS PROPRIETARY TO MOLEX ELECTRONIC TECHNOLOGIES, LLC AND SHOULD NOT BE USED WITHOUT WRITTEN PERMISSION

DIMENSION UNITS	SCALE
mm	NTS

GENERAL TOLERANCES (UNLESS SPECIFIED)

	MM	INCH
4 PLACES	±	±
3 PLACES	±	±
2 PLACES	± 0.2	±
1 PLACE	±	±
0 PLACES	±	±
ANGULAR TOL	± 3.0 °	

DRAFT WHERE APPLICABLE MUST REMAIN WITHIN DIMENSIONS

CURRENT REV DESC: BRIGHT TIN PHASE OUT

EC NO: 679909
DRWN: AKUMAR19 2021/06/29
CHK'D: MRAMAKRISHNA 2021/10/11
APPR: MRAMAKRISHNA 2021/10/11

INITIAL REVISION:
DRWN: GGUNAGI 2016/11/09
APPR: ISHWARG 2016/12/06

THIRD ANGLE PROJECTION | DRAWING: A3-SIZE | SERIES: 87898

molex

CUSTOM HEADER
2.54MM PITCH SINGLE ROW SINGLE WAFER SMT HEADER

PRODUCT CUSTOMER DRAWING

DOCUMENT NUMBER	DOC TYPE	DOC PART	REVISION
SD-87898-001	PSD	000	B24

MATERIAL NUMBER	CUSTOMER	SHEET NUMBER
SEE TABLE	GENERAL MARKET	20 OF 21

DOCUMENT STATUS	P1	RELEASE DATE	2021/10/11 11:53:29

FORMAT: Met-lega-master-lb-prod-A3
REVISION: E
DATE: 2020/01/14

PACKAGING OPTION PART NO.						CKT SIZE	PLATING TYPE	DIMENSION		
TRAY WITHOUT CAP	TRAY WITH CAP	TUBE WITHOUT CAP	TUBE WITH CAP	TAPE & REEL WITHOUT CAP	TAPE & REEL WITH CAP			G	F	M
------	------	------	------	------	87898-0218	2	4	10.69	9.65	5.84
------	------	------	------	------	87898-0219	2	6	10.69	9.65	5.84
------	------	------	87898-0220	------	------	2	6	10.64	9.60	5.84
	------	------	------	------	87898-0221	2	6	24.53	23.49	19.73

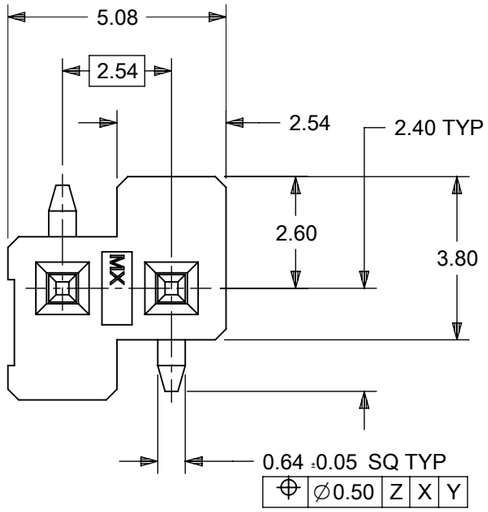

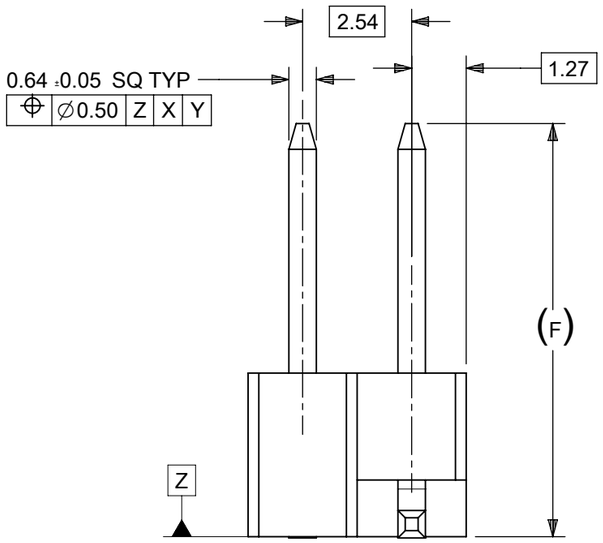

ONLY APPLICABLE TO 2CKT SIZE

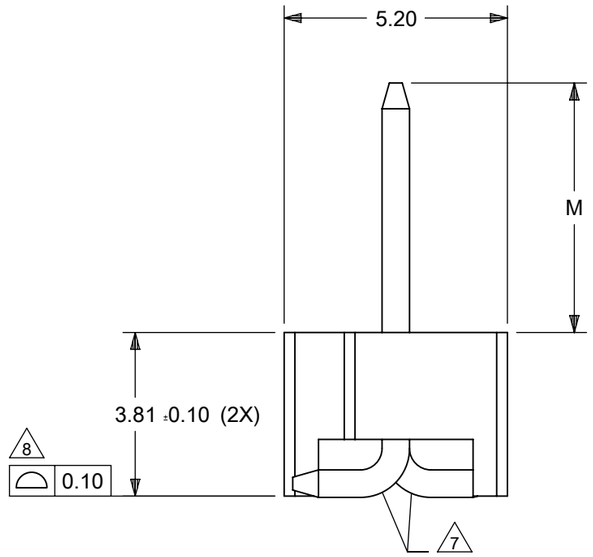

NOTES:

1. MATERIAL:
   HSG: LCP, GLASS-FILLED, UL94V-0, COLOR: BLACK
   CAP: NYLON, GLASS-FILLED, UL94V-0, COLOR: BLACK
   PIN: 0.64MM SQ, COPPER ALLOY
2. PLATING TYPE:
   (1) GOLD FLASH OVER
   1.25µm MIN. NICKEL OVERALL.
   (2) GOLD FLASH ON CONTACT AND
   2.50µm MIN. TIN ON SOLDERTAIL OVER
   1.25µm MIN. NICKEL OVERALL.
   (4) 0.38µm MIN. GOLD PLATE ON CONTACT AND
   2.00µm MIN. TIN ON SOLDERTAIL OVER
   1.25µm MIN. NICKEL OVERALL.
   (5) 0.75µm MIN. GOLD PLATE ON CONTACT AND
   2.00µm MIN. TIN ON SOLDERTAIL OVER
   1.25µm MIN. NICKEL OVERALL.
   (6) 2.50µm MIN. TIN OVERALL
   1.25µm MIN. NICKEL OVERALL
3. PRODUCT SPECIFICATION: PS-87920-019
4. PACKAGING TYPE: SEE TABLE
5. PACKAGING SPEC:
   TUBE WITH CAP VERSION: PK-89990-558
   TUBE W/O CAP VERSION: PK-89990-545
   EMBOSS TAPE WITH CAP: PK-87898-400
6. WAFER TO BE FLAT WITHIN 0.003 mm/mm
7. BEND DEPRESSION IS ACCEPTED SO LONG AS IT DOES NOT AFFECT THE OVERALL COPLANARITY OF TAIL
8. COPLANARITY IS TO BE MEASURED BY RESTING THE SOLDER TAIL ON A FLAT SURFACE
9. CAP LOCATION IS CENTERED ALONG THE MATING ENDS AS SHOWN. TOP SURFACE OF CAP TO BE FLAT FOR THE PURPOSE OF PICK & PLACE BY VACUUM SUCTION NOZZLE
10. RECOMMENDED PCB THICKNESS IS 1.60mm±0.10

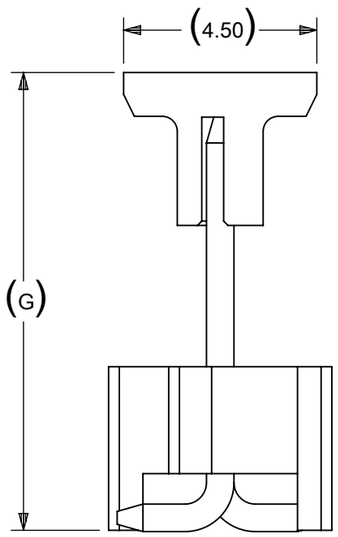

CONN WITH CAP

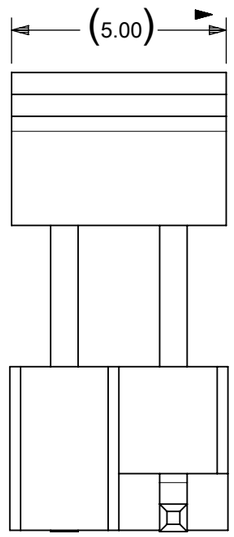

CONN WITH CAP

THIS DRAWING CONTAINS INFORMATION THAT IS PROPRIETARY TO MOLEX ELECTRONIC TECHNOLOGIES, LLC AND SHOULD NOT BE USED WITHOUT WRITTEN PERMISSION

DIMENSION UNITS	SCALE
mm	NTS

GENERAL TOLERANCES (UNLESS SPECIFIED)

	MM	INCH
4 PLACES	±	±
3 PLACES	±	±
2 PLACES	± 0.2	±
1 PLACE	±	±
0 PLACES	±	±
ANGULAR TOL	± 3.0 °	

DRAFT WHERE APPLICABLE MUST REMAIN WITHIN DIMENSIONS

CURRENT REV DESC: BRIGHT TIN PHASE OUT

EC NO: 679909
DRWN: AKUMAR19 2021/06/29
CHK'D: MRAMAKRISHNA 2021/10/11
APPR: MRAMAKRISHNA 2021/10/11

INITIAL REVISION:
DRWN: GGUNAGI 2016/11/09
APPR: ISHWARG 2016/12/06

THIRD ANGLE PROJECTION | DRAWING: A3-SIZE | SERIES: 87898

molex

CUSTOM HEADER
2.54MM PITCH SINGLE ROW SINGLE WAFER SMT HEADER

PRODUCT CUSTOMER DRAWING

DOCUMENT NUMBER	DOC TYPE	DOC PART	REVISION
SD-87898-001	PSD	000	B24

MATERIAL NUMBER	CUSTOMER	SHEET NUMBER
SEE TABLE	GENERAL MARKET	21 OF 21

DOCUMENT STATUS	P1	RELEASE DATE	2021/10/11 11:53:29

FORMAT: Met-lega-master-tb-prod-A3
REVISION: E
DATE: 2020/01/14

Mouser Electronics

Authorized Distributor

Click to View Pricing, Inventory, Delivery & Lifecycle Information:

Molex:

87898-1656 87898-0218 87898-0856 87898-0655 87898-2056 87898-0315