TABLE OF CONTENTS

SHEET NO.	SHEET DESCRIPTION
1	NOTES AND BOM
2	CONFIGURATIONS
3-4	KEY CONFIGURATIONS
5	RECEPTACLE CONNECTOR ASSEMBLY
6	BACKSHELL NOTES
7	BACKSHELL
8	BACKSHELL CONFIGURATIONS

NOTES: VALID UNLESS OTHERWISE SPECIFIED

1. GENERAL:
a. APPLICATION SPECIFICATION SEE: AS-33472-100
-CONTAINS: PRODUCT INTRODUCTION, PRODUCT SUMMARY, CONNECTOR ASSEMBLY, PACKAGING INFORMATION, CONNECTOR MATING, SERVICE INSTRUCTIONS, ELECTRICAL CONTINUITY CHECKING, CRIMPING, AND TROUBLESHOOTING.
-DESIGNED TO MATE WITH DEVICE OR CONNECTOR AS SPECIFIED IN THE MATING INTERFACE/CONNECTOR DRAWINGS CHART.
*DENOTES DRAWINGS THAT CAN BE ACCESSED AT <http://ewcap.uscarteams.org/>.
-ASSEMBLY SHIPPED WITH PLR IN PRE-LOCK POSITION (SEE PLR PRE-LOCK VIEW SHEET 5).
b. PRODUCT SPECIFICATION SEE:
-STANDARD CONFIGURATION: PS-33471-000
-UL V0 CONFIGURATION: PS-160105-0001
CONTAINS: PRODUCT INTRODUCTION, PRODUCT SUMMARY, RATINGS (CURRENT, TEMPERATURE, SEALING, AND FLAMMABILITY), TERMINALS, WIRE DIAMETER RANGE, PRODUCT VALIDATION, AND PRODUCT DEVIATIONS.
c. PACKAGING SPECIFICATION PER MOLEX DRAWING: SEE PACKAGING CHART
d. PARTS MUST BE IN COMPLIANCE TO MOLEX CHEMICAL SUBSTANCES FOR PRODUCTS AND PACKAGING SPECIFICATION: QEHS-699000-301
e. DATA MUST BE SUBMITTED UNDER THE MOLEX PART NUMBER TO IMDS (COMPANY ID#13255)

2. DESIGN - MATERIALS:
a. FOR BILL OF MATERIALS SEE:
-STANDARD CONFIGURATION SD-33471-0002
-UL V0 CONFIGURATION SD-160105-0002

3. DESIGN - GEOMETRY:
a. THE 3-D CAD DATA IS BASIC (WITHOUT TOLERANCE) AND MASTER FOR THIS PART WITH THE EXCEPTION OF UNDERLINED DIMENSIONS. DIMENSIONAL INFORMATION NOT SHOWN ON THIS DRAWING IS DEFINED BY THE DATA FILE AT ITS LATEST REVISION.
b. GEOMETRIC DIMENSIONS AND TOLERANCES PER ASME Y14.5M-2009
c. EDGES AND UNDIMENSIONED DETAILS PER ISO13715
d. CORNERS SHOWN AS SHARP TO BE R 0.2 MAX.
e. LETTERING SHALL BE 0.15 MAX RAISED IN 0.25 MAX RECESS PAD. THIS INCLUDES RECYCLING CODE, CAVITY ID, VENDOR IDENTIFICATION, AND CUSTOMER MATERIAL NUMBER.
f. VISUAL DEFECTS SHALL MEET COSMETIC STANDARD PS-45499-002 (Class B).
g. LASER MARKING:
1. PART NUMBER
2. DAY OF THE YEAR
3. SHIFT
4. YEAR
FOR ADDITIONAL INFORMATION SEE SECTION 5 UNDER PROCEDURES IN ES-34735-008.

PACKAGING

DESCRIPTION	DRAWING NO.
1X2	PK-31300-635
1X6	PK-31300-903

MATING INTERFACE/CONNECTOR DRAWINGS

DESCRIPTION	INTERFACE DEFINITION	MOLEX INLINE
1X2	*150-S-002-1-Z05	SD-33481-0001
1X6	*150-S-006-1-Z03	SD-33481-0001

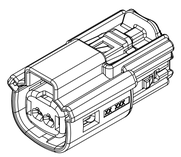

1x2

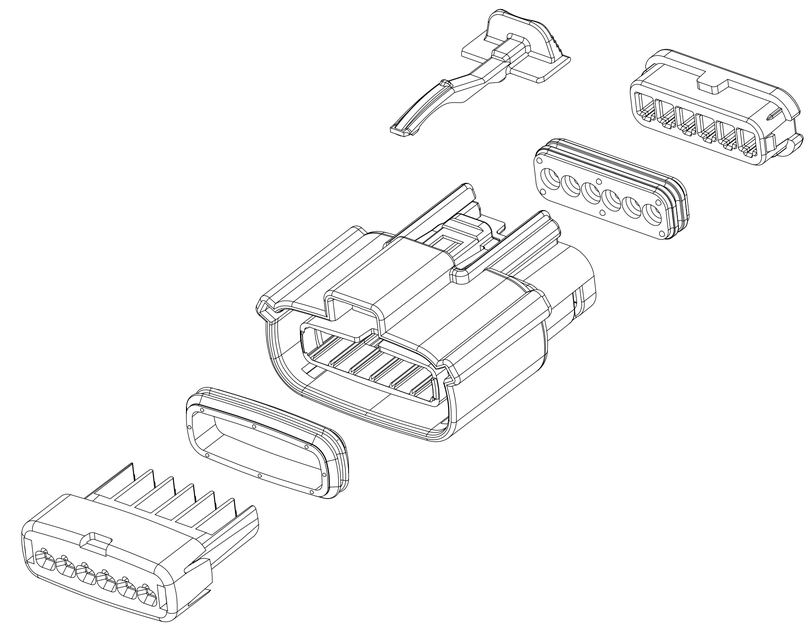

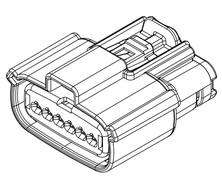

1x6

INSPECTION NUMBER LOG
LAST NUMBER: 11
ADDED: 11
REMOVED:

REV	REV DESCRIPTION
A1	UPDATED THE DRAWING FRAME
A	MINOR GEOMETRY CHANGE FOR UL V0
2	UPDATE VIEWSETS
1	INITIAL RELEASE

THIS DRAWING CONTAINS INFORMATION THAT IS PROPRIETARY TO MOLEX ELECTRONIC TECHNOLOGIES, LLC AND SHOULD NOT BE USED WITHOUT WRITTEN PERMISSION

FUNCTIONAL SYMBOLS: FA = 0, FC = 0, FD = 0
DIVISIONAL SYMBOLS

DIMENSION UNITS	SCALE
mm	1.5:1

GENERAL TOLERANCES (UNLESS SPECIFIED)

ANGULAR TOL	±	1.0 °
4 PLACES	±	
3 PLACES	±	
2 PLACES	±	0.1
1 PLACE	±	0.2
0 PLACES	±	

DRAFT WHERE APPLICABLE MUST REMAIN WITHIN DIMENSIONS

CURRENT REV DESC:

EC NO: 643941
DRWN: XLDONG03 2020/08/21
CHK'D: JDENG02 2020/08/26
APPR: JDENG02 2020/08/26

INITIAL REVISION:
DRWN: APROFFITT 2015/11/04
APPR: KDEKOSHI 2016/06/14

THIRD ANGLE PROJECTION | DRAWING: D-SIZE | SERIES: 33471

molex

MX150 RCPT
SINGLE ROW SEALED ASSY MAT SEAL

PRODUCT CUSTOMER DRAWING

DOCUMENT NUMBER	DOC TYPE	DOC PART	REVISION
SD-33471-0001	PSD	001	A1

MATERIAL NUMBER	CUSTOMER	SHEET NUMBER
SEE NOTE 2a	GENERAL MARKET	1 OF 8

DOCUMENT STATUS	P1	RELEASE DATE	2020/08/26 07:23:52

NUMBER: 33471-0001-001
REVISION: A1
DATE: 2020/08/26

SHEET DESCRIPTION

CONFIGURATIONS

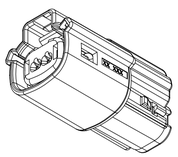

1x2 - STD

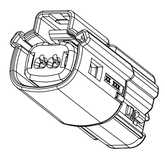

1x2 - UL V0*

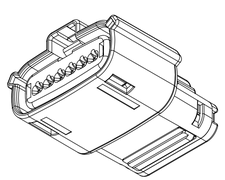

1x6 - STD

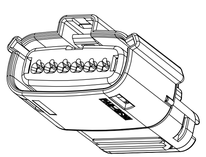

1x6 - UL V0*

*MINOR GEOMETRY DIFFERENCE THAN STANDARD CONFIGUATION
SEE NOTES 1 & 2 FOR MORE INFORMATION

DOCUMENT STATUS	P1	RELEASE DATE	2020/08/26 07:23:52

FUNCTIONAL SYMBOLS: FA = 0, FC = 0, FD = 0

DIVISIONAL SYMBOLS

THIS DRAWING CONTAINS INFORMATION THAT IS PROPRIETARY TO MOLEX ELECTRONIC TECHNOLOGIES, LLC AND SHOULD NOT BE USED WITHOUT WRITTEN PERMISSION

DIMENSION UNITS	SCALE
mm	1.5:1

GENERAL TOLERANCES (UNLESS SPECIFIED)

ANGULAR TOL	±	1.0 °
4 PLACES	±	
3 PLACES	±	
2 PLACES	±	0.1
1 PLACE	±	0.2
0 PLACES	±	

DRAFT WHERE APPLICABLE MUST REMAIN WITHIN DIMENSIONS

CURRENT REV DESC:

EC NO: 643941
DRWN: XLDONG03 2020/08/21
CHK'D: JDENG02 2020/08/26
APPR: JDENG02 2020/08/26

INITIAL REVISION:
DRWN: APROFFITT 2015/11/04
APPR: KDEKOSKI 2016/06/14

molex

MX150 RCPT
SINGLE ROW SEALED ASSY MAT SEAL

PRODUCT CUSTOMER DRAWING

DOCUMENT NUMBER	DOC TYPE	DOC PART	REVISION
SD-33471-0001	PSD	001	A1

THIRD ANGLE PROJECTION	DRAWING	SERIES	MATERIAL NUMBER	CUSTOMER	SHEET NUMBER
	D-SIZE	33471	SEE NOTE 2a	GENERAL MARKET	2 OF 8

SHEET DESCRIPTION

KEY CONFIGURATIONS

1X2

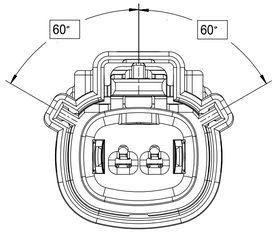

KEY A

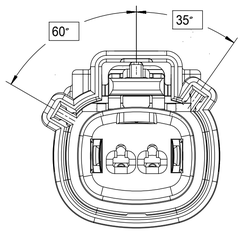

KEY B

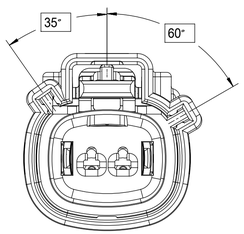

KEY C

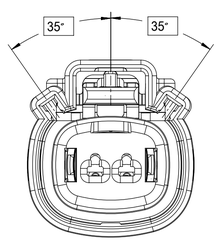

KEY D

DOCUMENT STATUS	P1	RELEASE DATE	2020/08/26 07:23:52

FUNCTIONAL SYMBOLS

FA = 0

FC = 0

FP = 0

DIVISIONAL SYMBOLS

THIS DRAWING CONTAINS INFORMATION THAT IS PROPRIETARY TO MOLEX ELECTRONIC TECHNOLOGIES, LLC AND SHOULD NOT BE USED WITHOUT WRITTEN PERMISSION

DIMENSION UNITS	SCALE
mm	3:1

GENERAL TOLERANCES (UNLESS SPECIFIED)

ANGULAR TOL	±	1.0 °
4 PLACES	±	
3 PLACES	±	
2 PLACES	±	0.1
1 PLACE	±	0.2
0 PLACES	±	

DRAFT WHERE APPLICABLE MUST REMAIN WITHIN DIMENSIONS

CURRENT REV DESC:

EC NO: 643941

DRWN:	XLDONG03	2020/08/21
CHK'D:	JDENG02	2020/08/26
APPR:	JDENG02	2020/08/26

INITIAL REVISION:

DRWN:	APROFFITT	2015/11/04
APPR:	KDEKOSKI	2016/06/14

THIRD ANGLE PROJECTION

DRAWING: D-SIZE

SERIES: 33471

molex

MX150 RCPT
SINGLE ROW SEALED ASSY MAT SEAL

PRODUCT CUSTOMER DRAWING

DOCUMENT NUMBER	DOC TYPE	DOC PART	REVISION
SD-33471-0001	PSD	001	A1

MATERIAL NUMBER	CUSTOMER	SHEET NUMBER
SEE NOTE 2a	GENERAL MARKET	3 OF 8

SHEET DESCRIPTION

KEY CONFIGURATIONS CONT.

1X6

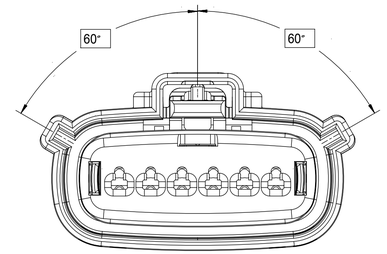

KEY A

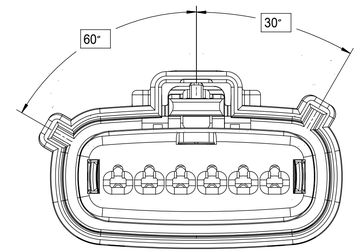

KEY B

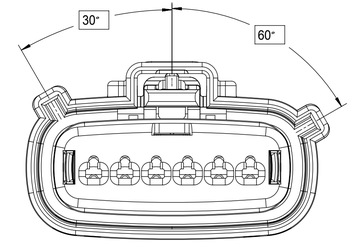

KEY C

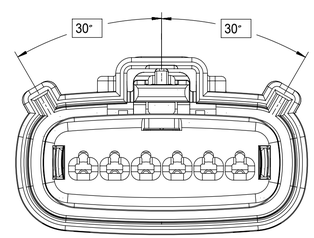

KEY D

FUNCTIONAL SYMBOLS	
FA	= 0
FC	= 0
FP	= 0
DIVISIONAL SYMBOLS	

THIS DRAWING CONTAINS INFORMATION THAT IS PROPRIETARY TO MOLEX ELECTRONIC TECHNOLOGIES, LLC AND SHOULD NOT BE USED WITHOUT WRITTEN PERMISSION

DIMENSION UNITS	SCALE
mm	3:1

GENERAL TOLERANCES (UNLESS SPECIFIED)		
ANGULAR TOL	±	1.0 °
4 PLACES	±	
3 PLACES	±	
2 PLACES	±	0.1
1 PLACE	±	0.2
0 PLACES	±	

DRAFT WHERE APPLICABLE MUST REMAIN WITHIN DIMENSIONS

CURRENT REV DESC:

EC NO: 643941
DRWN: XLDONG03 2020/08/21
CHK'D: JDENG02 2020/08/26
APPR: JDENG02 2020/08/26

INITIAL REVISION:
DRWN: APROFFITT 2015/11/04
APPR: KDEKOSKI 2016/06/14

molex

MX150 RCPT
SINGLE ROW SEALED ASSY MAT SEAL

PRODUCT CUSTOMER DRAWING

DOCUMENT NUMBER	DOC TYPE	DOC PART	REVISION
SD-33471-0001	PSD	001	A1

THIRD ANGLE PROJECTION	DRAWING	SERIES	MATERIAL NUMBER	CUSTOMER	SHEET NUMBER
	D-SIZE	33471	SEE NOTE 2a	GENERAL MARKET	4 OF 8

DOCUMENT STATUS	P1	RELEASE DATE	2020/08/26 07:23:52

FORMAT: model-SI-prod-D
REVISION: J
DATE: 2020/01/14

SHEET DESCRIPTION

RECEPTACLE CONNECTOR ASSEMBLY - STD

CHARTED DIMENSIONS

DESCRIPTION	DIMENSIONS					
	A	B	C	D	E	F
1X2	19.40	1.75	21.73	20.55	37.65	19.64
1X6	32.75	1.75	35.21	19.90	37.65	N/A
1X6 UL V0	N/A	1.75	35.23	19.90	37.65	33.64

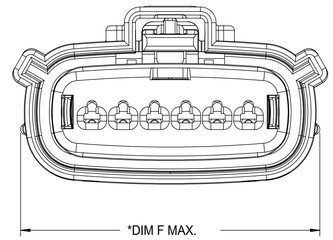

*APPLIE TO UL V0 CONFIGURATIONS ONLY

(11)

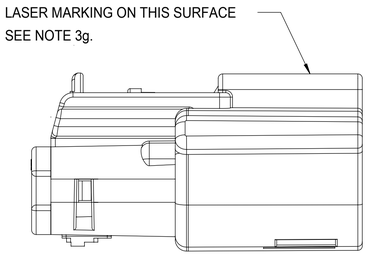

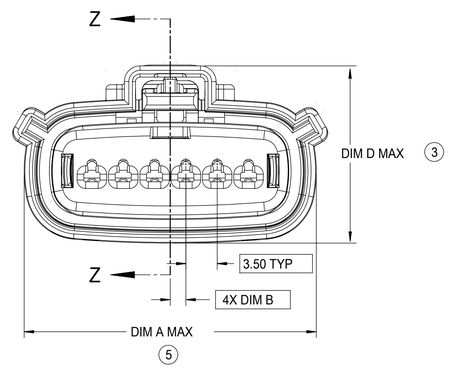

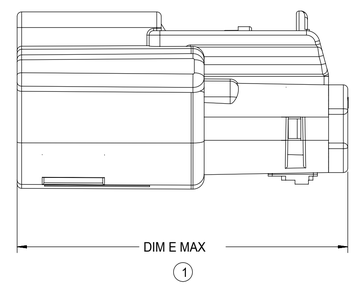

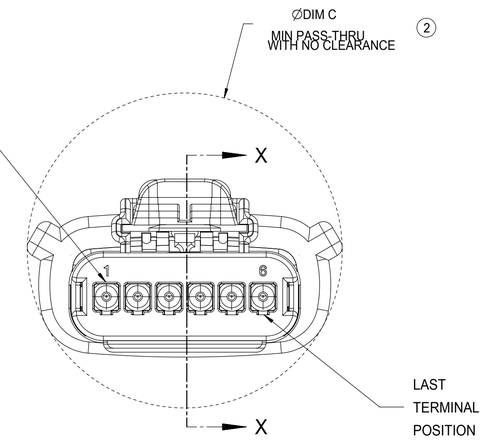

REAR VIEW
(WIRE HARNESS SIDE)

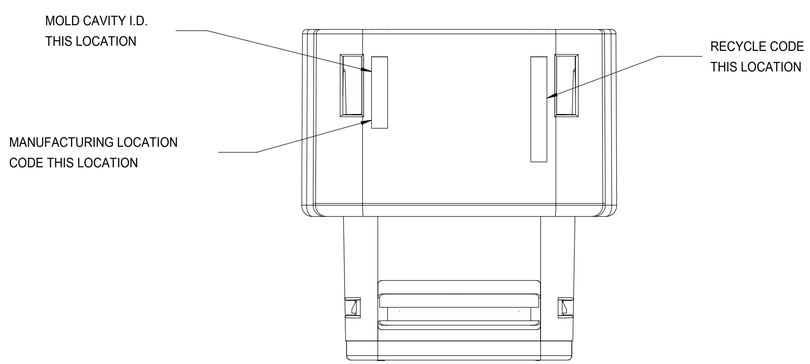

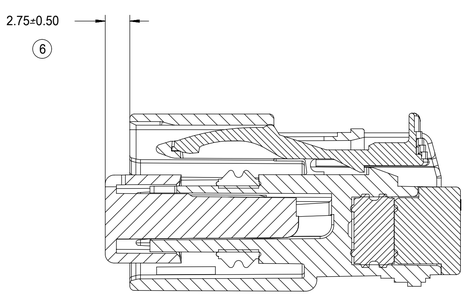

PRIMARY LOCK REINFORCEMENT (PLR) SHOWN
IN PRE-STAGED POSITION

SECTION Z-Z

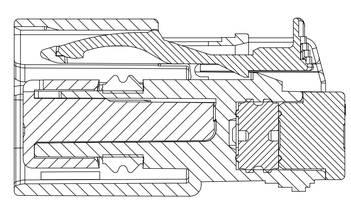

PRIMARY LOCK REINFORCEMENT (PLR) SHOWN
IN FINAL-LOCK POSITION

SECTION X-X

DOCUMENT STATUS	P1	RELEASE DATE	2020/08/26 07:23:52

THIS DRAWING CONTAINS INFORMATION THAT IS PROPRIETARY TO MOLEX ELECTRONIC TECHNOLOGIES, LLC AND SHOULD NOT BE USED WITHOUT WRITTEN PERMISSION

FUNCTIONAL SYMBOLS: FA = 0, FC = 0, FE = 0

DIVISIONAL SYMBOLS

DIMENSION UNITS	SCALE
mm	3:1

GENERAL TOLERANCES (UNLESS SPECIFIED)

ANGULAR TOL	±	1.0 °
4 PLACES	±	
3 PLACES	±	
2 PLACES	±	0.1
1 PLACE	±	0.2
0 PLACES	±	

DRAFT WHERE APPLICABLE MUST REMAIN WITHIN DIMENSIONS

CURRENT REV DESC:

EC NO: 643941
DRWN: XLDONG03 2020/08/21
CHK'D: JDENG02 2020/08/26
APPR: JDENG02 2020/08/26

INITIAL REVISION:
DRWN: APROFFITT 2015/11/04
APPR: KDEKOSKI 2016/06/14

THIRD ANGLE PROJECTION | DRAWING: D-SIZE | SERIES: 33471

molex

MX150 RCPT
SINGLE ROW SEALED ASSY MAT SEAL

PRODUCT CUSTOMER DRAWING

DOCUMENT NUMBER	DOC TYPE	DOC PART	REVISION
SD-33471-0001	PSD	001	A1

MATERIAL NUMBER	CUSTOMER	SHEET NUMBER
SEE NOTE 2a	GENERAL MARKET	5 OF 8

SHEET DESCRIPTION

BACKSHELL NOTES

BACKSHELL NOTES: VALID UNLESS OTHERWISE SPECIFIED

1. GENERAL:

a. APPLICATION SPECIFICATION SEE: AS-34951-001

-DESIGNED TO MATE WITH RECEPTACLE SEALED ASSEMBLY
SPECIFIED IN MOLEX DRAWING SD-33471-0001.
-SYSTEM TO BE USED WITH WIRE WITHIN DIAMETER RANGE OF 1.2mm TO 2.69mm.
-COMPONENTS ARE OPTIONAL AND MUST BE PURCHASED SEPERATELY.
-BACKSHELL DESIGN IS OWNED BY SCHLEMMER.
-FOR ADDITIONAL INFORMATION SEE THE BACKSHELL COMPONENT DRAWING SD-34949-0001.

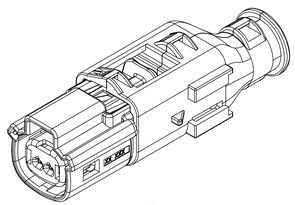

1X2

BACKSHELL CUSTOMER
MODEL NUMBER LEGEND

34949-XXXX

CUSTOMER MODEL COMPONENTS
- 0 - BACKSHELL ONLY
- 1 - BACKSHELL & MX150 HOUSING KEY A ASSEMBLY
- 2 - BACKSHELL & MX150 HOUSING KEY B ASSEMBLY
- 3 - BACKSHELL & MX150 HOUSING KEY C ASSEMBLY
- 4 - BACKSHELL & MX150 HOUSING KEY D ASSEMBLY

BACKSHELL FEATURES
- 1 - WITH RIBS
- 2 - WITHOUT RIBS

MX150 CIRCUIT SIZE 02, 03, 04, 05, 06

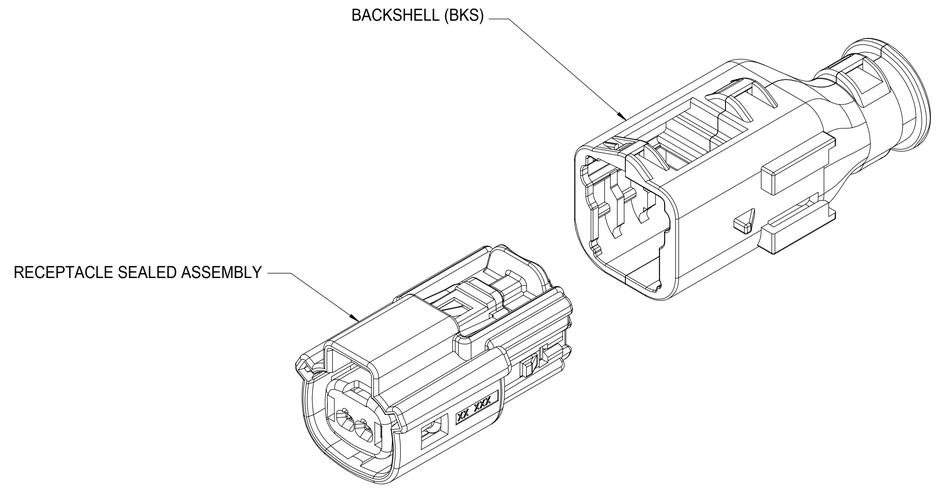

THIS DRAWING CONTAINS INFORMATION THAT IS PROPRIETARY TO MOLEX ELECTRONIC TECHNOLOGIES, LLC AND SHOULD NOT BE USED WITHOUT WRITTEN PERMISSION

FUNCTIONAL SYMBOLS
FA = 0
FC = 0
FP = 0
DIVISIONAL SYMBOLS

DIMENSION UNITS	SCALE
mm	4:1

GENERAL TOLERANCES (UNLESS SPECIFIED)

ANGULAR TOL	±	1.0 °
4 PLACES	±	
3 PLACES	±	
2 PLACES	±	0.1
1 PLACE	±	0.2
0 PLACES	±	

DRAFT WHERE APPLICABLE MUST REMAIN WITHIN DIMENSIONS

CURRENT REV DESC:

EC NO: 643941
DRWN: XLDONG03 2020/08/21
CHK'D: JDENG02 2020/08/26
APPR: JDENG02 2020/08/26

INITIAL REVISION:
DRWN: APROFFITT 2015/11/04
APPR: KDEKOSKI 2016/06/14

molex

MX150 RCPT
SINGLE ROW SEALED ASSY MAT SEAL

PRODUCT CUSTOMER DRAWING

DOCUMENT NUMBER	DOC TYPE	DOC PART	REVISION
SD-33471-0001	PSD	001	A1

THIRD ANGLE PROJECTION	DRAWING	SERIES	MATERIAL NUMBER	CUSTOMER	SHEET NUMBER
	D-SIZE	33471	SEE NOTE 2a	GENERAL MARKET	6 OF 8

DOCUMENT STATUS	P1	RELEASE DATE	2020/08/26 07:23:52

FORMAT: 2_master-tb-prod-01
REVISION: J
DATE: 2020/01/14

SHEET DESCRIPTION

BACKSHELL

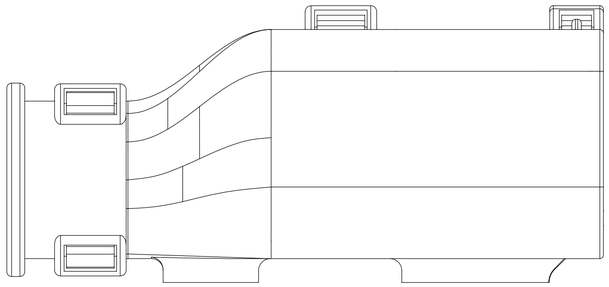

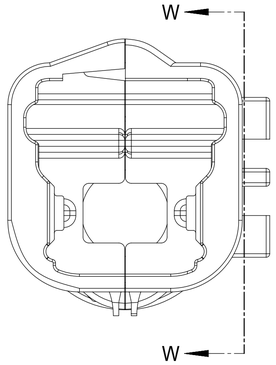

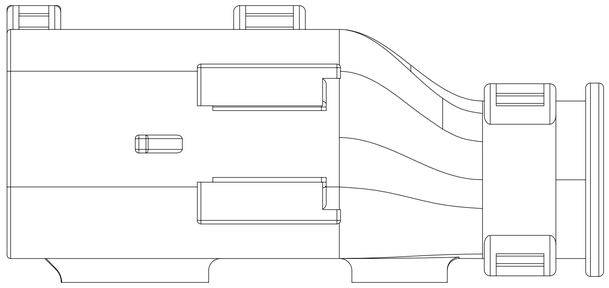

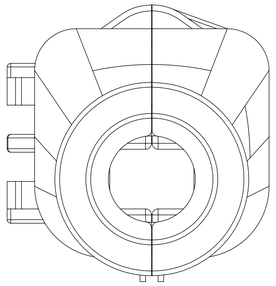

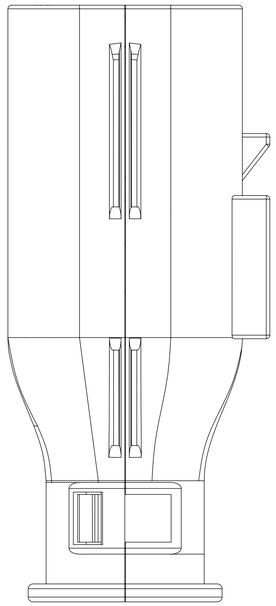

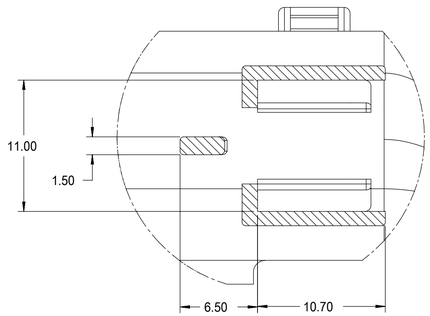

Partial W-W
SCALE 4:1

FUNCTIONAL SYMBOLS			
FA = 0	DIMENSION UNITS: mm	SCALE: 4:1	
FC = 0	GENERAL TOLERANCES (UNLESS SPECIFIED)		
FP = 0	ANGULAR TOL	±	1.0 °
	4 PLACES	±	
DIVISIONAL SYMBOLS	3 PLACES	±	
	2 PLACES	±	0.1
	1 PLACE	±	0.2
	0 PLACES	±	
	DRAFT WHERE APPLICABLE MUST REMAIN WITHIN DIMENSIONS		

THIS DRAWING CONTAINS INFORMATION THAT IS PROPRIETARY TO MOLEX ELECTRONIC TECHNOLOGIES, LLC AND SHOULD NOT BE USED WITHOUT WRITTEN PERMISSION

CURRENT REV DESC:

EC NO: 643941
DRWN: XLDONG03 2020/08/21
CHK'D: JDENG02 2020/08/26
APPR: JDENG02 2020/08/26

INITIAL REVISION:
DRWN: APROFFITT 2015/11/04
APPR: KDEKOSKI 2016/06/14

molex

MX150 RCPT
SINGLE ROW SEALED ASSY MAT SEAL

PRODUCT CUSTOMER DRAWING

DOCUMENT NUMBER	DOC TYPE	DOC PART	REVISION
SD-33471-0001	PSD	001	A1

THIRD ANGLE PROJECTION	DRAWING	SERIES	MATERIAL NUMBER	CUSTOMER	SHEET NUMBER
	D-SIZE	33471	SEE NOTE 2a	GENERAL MARKET	7 OF 8

DOCUMENT STATUS	P1	RELEASE DATE	2020/08/26 07:23:52

FORMAT: master-b-prod-D
TEMPLATE:
DATE: 2020-01-14

SHEET DESCRIPTION

BACKSHELL CONFIGURATIONS

CHARTED DIMENSIONS	
DESCRIPTION	DIMENSIONS
	G
1X2	26.00

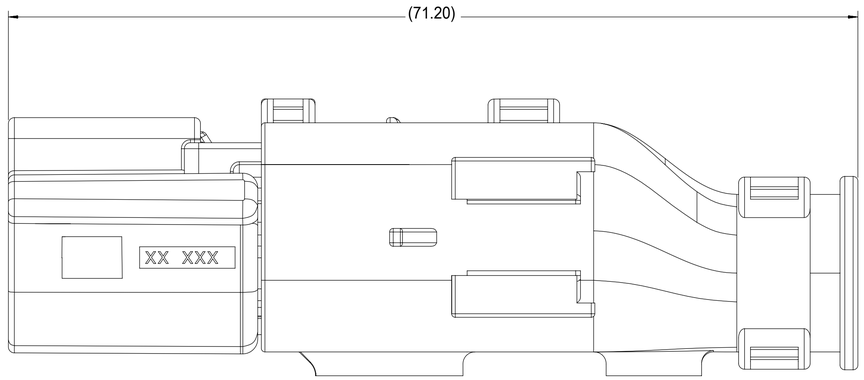

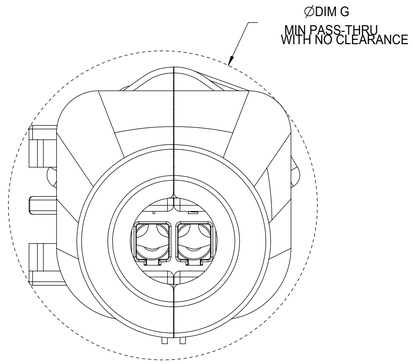

RECEPTACLE SEALED ASSEMBLY WITH RECEPTACLE BACKSHELL

FUNCTIONAL SYMBOLS	
FA	= 0
FC	= 0
FP	= 0
DIVISIONAL SYMBOLS	

THIS DRAWING CONTAINS INFORMATION THAT IS PROPRIETARY TO MOLEX ELECTRONIC TECHNOLOGIES, LLC AND SHOULD NOT BE USED WITHOUT WRITTEN PERMISSION

DIMENSION UNITS	SCALE
mm	4:1

GENERAL TOLERANCES (UNLESS SPECIFIED)		
ANGULAR TOL	±	1.0 °
4 PLACES	±	
3 PLACES	±	
2 PLACES	±	0.1
1 PLACE	±	0.2
0 PLACES	±	

DRAFT WHERE APPLICABLE MUST REMAIN WITHIN DIMENSIONS

CURRENT REV DESC:

EC NO: 643941
DRWN: XLDONG03 2020/08/21
CHK'D: JDENG02 2020/08/26
APPR: JDENG02 2020/08/26

INITIAL REVISION:
DRWN: APROFFITT 2015/11/04
APPR: KDEKOSKI 2016/06/14

molex

MX150 RCPT
SINGLE ROW SEALED ASSY MAT SEAL

PRODUCT CUSTOMER DRAWING

DOCUMENT NUMBER	DOC TYPE	DOC PART	REVISION
SD-33471-0001	PSD	001	A1

THIRD ANGLE PROJECTION	DRAWING	SERIES	MATERIAL NUMBER	CUSTOMER	SHEET NUMBER
	D-SIZE	33471	SEE NOTE 2a	GENERAL MARKET	8 OF 8

DOCUMENT STATUS	P1	RELEASE DATE	2020/08/26 07:23:52

FORMAT: model-10-prod-D
REVISION: J
DATE: 2020/01/14

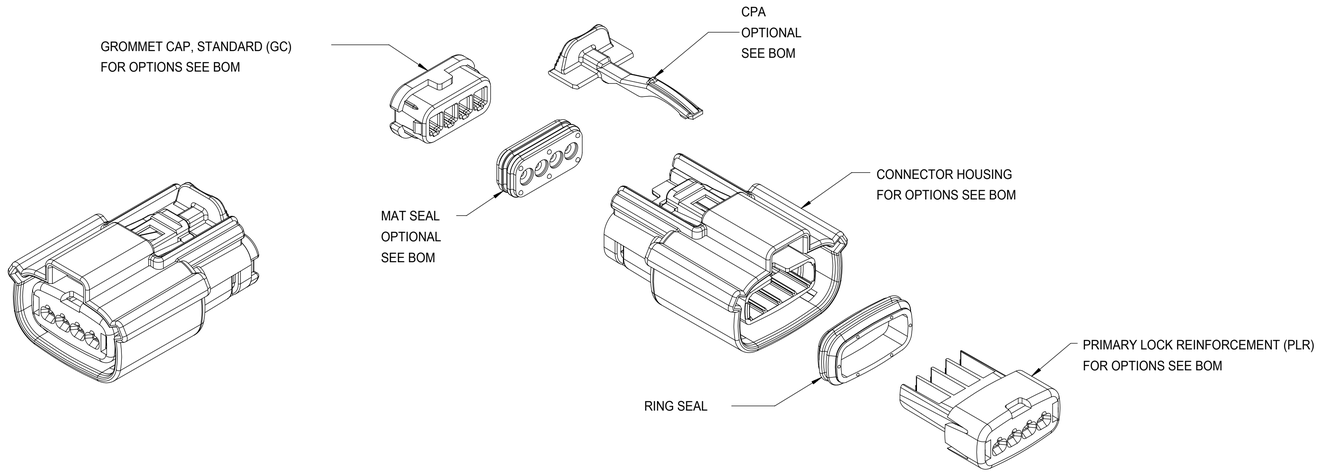

MX150 1X4 RECEPTACLE SEALED ASSEMBLY - STANDARD (STD)

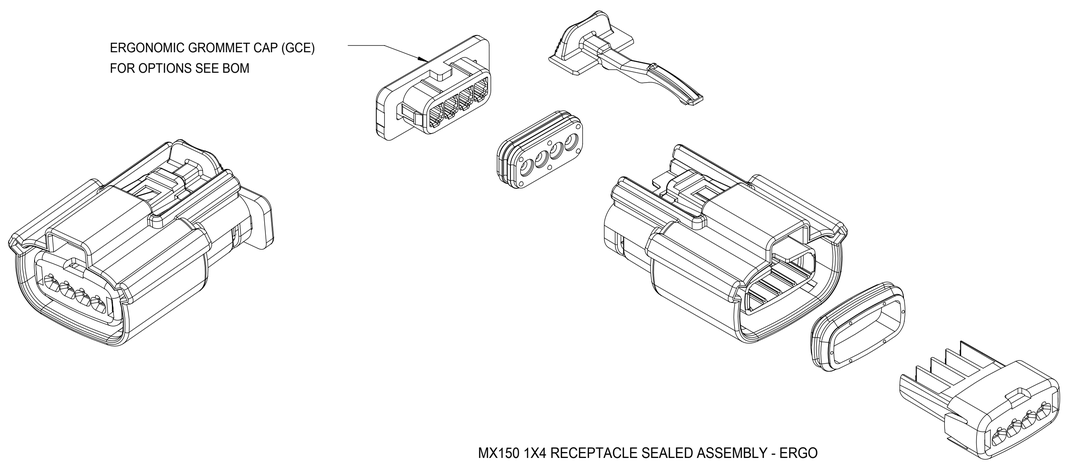

MX150 1X4 RECEPTACLE SEALED ASSEMBLY - ERGO
UNLESS COMPONENT NOTED, SEE STANDARD ASSEMBLY

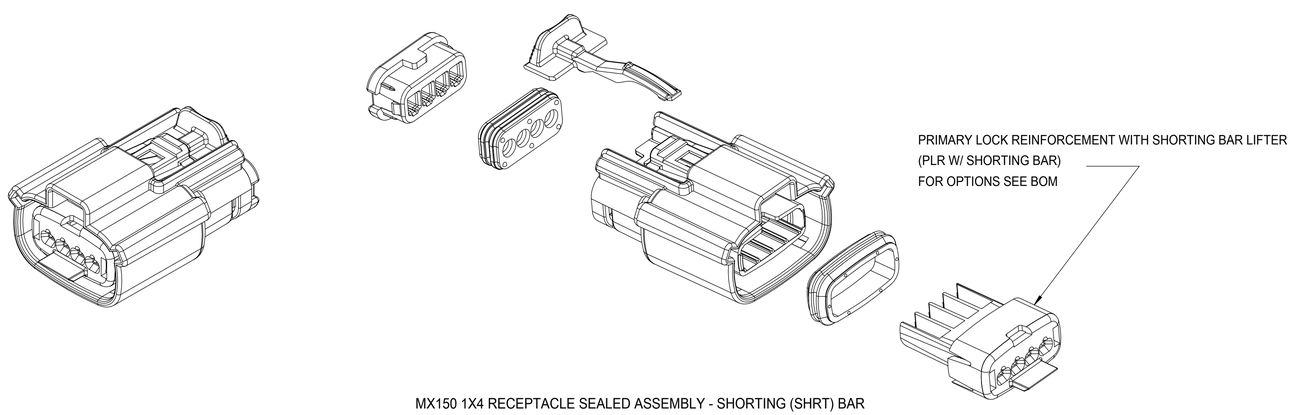

MX150 1X4 RECEPTACLE SEALED ASSEMBLY - SHORTING (SHRT) BAR
UNLESS COMPONENT NOTED, SEE STANDARD ASSEMBLY

TABLE OF CONTENTS

SHEET NO.	SHEET DESCRIPTION
1	NOTES
2	KEY CONFIGURATIONS
3	RECEPTACLE SEALED ASSEMBLY
4-5	BOM

NOTES: VALID UNLESS OTHERWISE SPECIFIED

1. GENERAL:
a. APPLICATION SPECIFICATION SEE: AS-33472-100
-CONTAINS: PRODUCT INTRODUCTION, PRODUCT SUMMARY, CONNECTOR ASSEMBLY, PACKAGING INFORMATION, CONNECTOR MATING, SERVICE INSTRUCTIONS, ELECTRICAL CONTINUITY CHECKING, CRIMPING, AND TROUBLESHOOTING.
-STANDARD (NON-SHRT) CONFIGURATIONS DESIGNED TO MATE WITH DEVICE CONNECTION AS SPECIFIED IN DRAWING SD-33481-041 AND EWCAP 150-S-004-1-Z03, AVAILIBLE AT http://ewcap.uscarteams.org/
-SHORTING BAR CONFIGURATIONS DESIGNED TO MATE WITH BLADE SEALED ASSEMBLY SPECIFIED IN DRAWING SD-31280-200
-FOR 1.5mm RECEPTACLE TERMINALS TO BE USED WITH THIS ASSEMBLY. SEE MOLEX DRAWING SD-33012-002.
-SYSTEM TO BE USED WITH WIRE WITHIN DIAMETER RANGE OF 1.2mm TO 2.69mm.
-ASSEMBLY SHIPPED WITH PLR AND CPA IN PRE-LOCK POSITION (SEE SECTION Z-Z PRE-LOCK).
-IN THE EVENT THAT THE PLR IS FOUND IN THE SEATED (FINAL LOCK) POSITION, REFER TO MOLEX SPECIFICATION PS-34646-001, AVAILABLE AT www.molex.com <http://www.molex.com>.
-ASSEMBLY CONFORMS TO SAE/USCAR-2 REV 4 WITH THE FOLLOWING EXCEPTIONS:
ENGAGEMENT FORCE TO MOVE CPA FROM PRE-LOCK TO FINAL LOCK POSITION WHEN UNMATED: 40N MIN.
DISENGAGEMENT FORCE TO MOVE CPA FROM FINAL LOCK TO PRE-LOCK POSITION: 3N MIN, 40N MAX.
TERMINAL INSERTION FORCE FOR WIRE DIAMETER ABOVE 2.5mm AND NOT EXCEEDING 2.69mm SHALL NOT EXCEED 40 NEWTONS.
b. PRODUCT SPECIFICATION SEE: PS-33471-000
CONTAINS: PRODUCT INTRODUCTION, PRODUCT SUMMARY, RATINGS (CURRENT, TEMPERATURE, SEALING, AND FLAMMABILITY), AND PRODUCT VALIDATION.
c. PACKAGING SPECIFICATION PER MOLEX DRAWING: PK-31300-903
d. PARTS MUST BE IN COMPLIANCE TO MOLEX CHEMICAL SUBSTANCES FOR PRODUCTS AND PACKAGING SPECIFICATION: ES-40000-5016
e. DATA MUST BE SUBMITTED UNDER THE MOLEX PART NUMBER TO IMDS (COMPANY ID#13255)

2. DESIGN - MATERIALS:
a. SEE BOM TABLE

3. DESIGN - GEOMETRY:
a. THIS IS A 100% CAD GENERATED PART. THE CAD MATHEMATICAL DATA IS THE MASTER FOR THIS PART. FOR DIMENSIONAL OR ANY INFORMATION NOT SHOWN ON THIS DRAWING, ANALYZE THE CAD MODEL.
b. GEOMETRIC DIMENSIONS AND TOLERANCES PER ASME Y14.5M - 1994
c. EDGES AND UNDIMENSIONED DETAILS PER ISO13715
d. CORNERS SHOWN AS SHARP TO BE R 0.2 MAX.
e. LETTERING SHALL BE 0.15 MAX RAISED IN 0.25 MAX RECESS PAD. THIS INCLUDES RECYCLING CODE, CAVITY ID, VENDOR IDENTIFICATION, AND CUSTOMER MATERIAL NUMBER.
f. VISUAL DEFECTS SHALL MEET COSMETIC STANDARD PS-45499-002 (Class B)
g. LASER MARKING: TBD

INSPECTION NUMBER LOG
LAST NUMBER USED: 5
ADDED:
REMOVED: 2

REV	DESCRIPTION
W6	ADD NEW P/N 33471-0497
W5	ADD NEW P/N 33471-0496
W4	ADD NEW P/N 33471-0495
W3	UPDATED THE DRAWING FRAME
W2	ADD NEW P/N 33471-0494
W1	ADD NEW P/N 33471-0493
W	REMOVE THE 33471-0489 CPA

THIS DRAWING CONTAINS INFORMATION THAT IS PROPRIETARY TO MOLEX ELECTRONIC TECHNOLOGIES, LLC AND SHOULD NOT BE USED WITHOUT WRITTEN PERMISSION

FUNCTIONAL SYMBOLS: FA = 0, FC = 0, FP = 0
DIVISIONAL SYMBOLS

DIMENSION UNITS	SCALE
mm	2:1

GENERAL TOLERANCES (UNLESS SPECIFIED)

ANGULAR TOL	±	3.0 °
4 PLACES	±	
3 PLACES	±	
2 PLACES	±	0.1
1 PLACE	±	0.3
0 PLACES	±	

DRAFT WHERE APPLICABLE MUST REMAIN WITHIN DIMENSIONS

CURRENT REV DESC: SEE REVISION TABLE

EC NO: 674870
DRWN: SCV 2021/08/23
CHK'D: GGA 2021/08/27
APPR: GGA 2021/08/27

INITIAL REVISION:
DRWN: DGRIFFITHS 2010/03/31
APPR: VKOSHY 2010/04/06

THIRD ANGLE PROJECTION | DRAWING: D-SIZE | SERIES: 33471

molex

MX150 1X4 RECEPTACLE SEALED ASSEMBLY MAT SEAL

PRODUCT CUSTOMER DRAWING

DOCUMENT NUMBER	DOC TYPE	DOC PART	REVISION
SD-33471-041	PSD	002	W6

MATERIAL NUMBER	CUSTOMER	SHEET NUMBER
SEE BOM	GENERAL MARKET	1 OF 6

DOCUMENT STATUS	P1	RELEASE DATE	2021/08/27 04:44:52

TEMPLATE: molex-landscape
REVISION: J
DATE: 2020/01/14

KEY CONFIGURATIONS

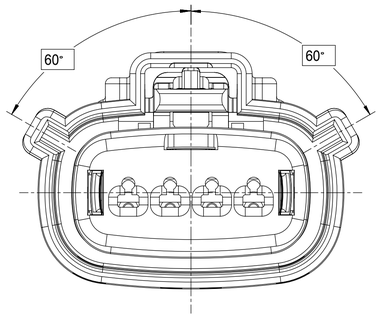

KEY A

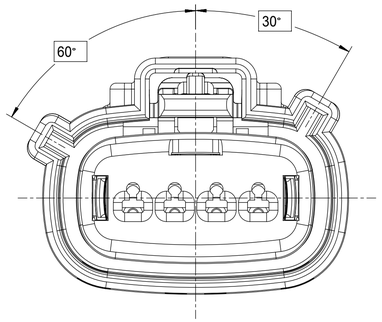

KEY B

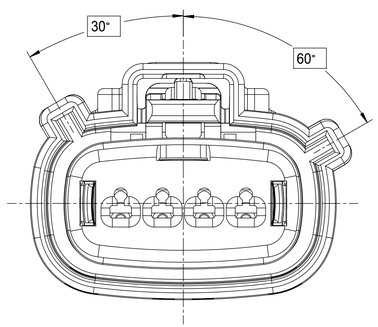

KEY C

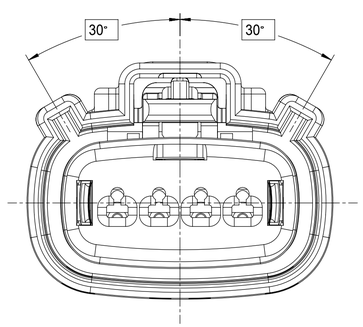

KEY D

FUNCTIONAL SYMBOLS	THIS DRAWING CONTAINS INFORMATION THAT IS PROPRIETARY TO MOLEX ELECTRONIC TECHNOLOGIES, LLC AND SHOULD NOT BE USED WITHOUT WRITTEN PERMISSION				
FA = 0	DIMENSION UNITS: mm	SCALE: 4:1	CURRENT REV DESC: SEE REVISION TABLE		molex
FC = 0	GENERAL TOLERANCES (UNLESS SPECIFIED)				MX150 1X4 RECEPTACLE SEALED ASSEMBLY MAT SEAL
FP = 0	ANGULAR TOL ± 3.0 °		EC NO: 674870		
	4 PLACES ±		DRWN: SCV	2021/08/23	
DIVISIONAL SYMBOLS	3 PLACES ±		CHK'D: GGA	2021/08/27	PRODUCT CUSTOMER DRAWING
	2 PLACES ± 0.1		APPR: GGA	2021/08/27	
	1 PLACE ± 0.3		INITIAL REVISION:		
	0 PLACES ±		DRWN: DGRIFFITHS	2010/03/31	
	DRAFT WHERE APPLICABLE MUST REMAIN WITHIN DIMENSIONS		APPR: VKOSHY	2010/04/06	

THIRD ANGLE PROJECTION	DRAWING	SERIES	MATERIAL NUMBER	CUSTOMER	SHEET NUMBER
	D-SIZE	33471	SEE BOM	GENERAL MARKET	2 OF 6

DOCUMENT NUMBER	DOC TYPE	DOC PART	REVISION
SD-33471-041	PSD	002	W6

DOCUMENT STATUS	P1	RELEASE DATE	2021/08/27 04:44:52

TEMPLATE: PRODUCT-PS-A3-MOLEX
REVISION: J
DATE: 2020/01/14

RECEPTACLE SEALED ASSEMBLY

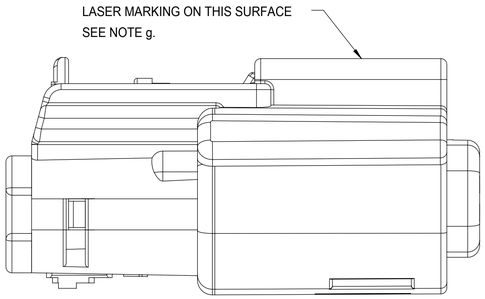

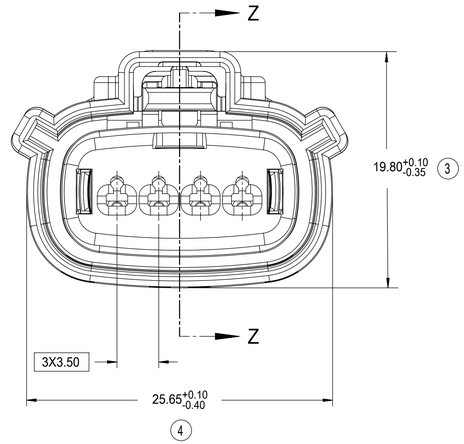

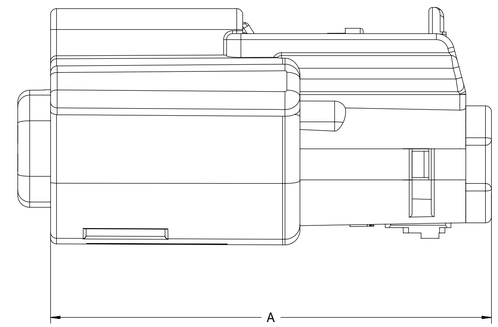

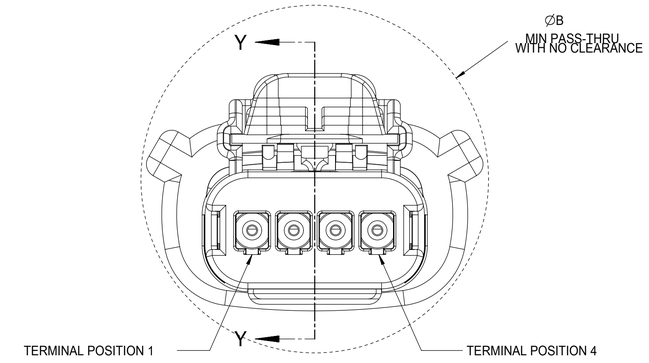

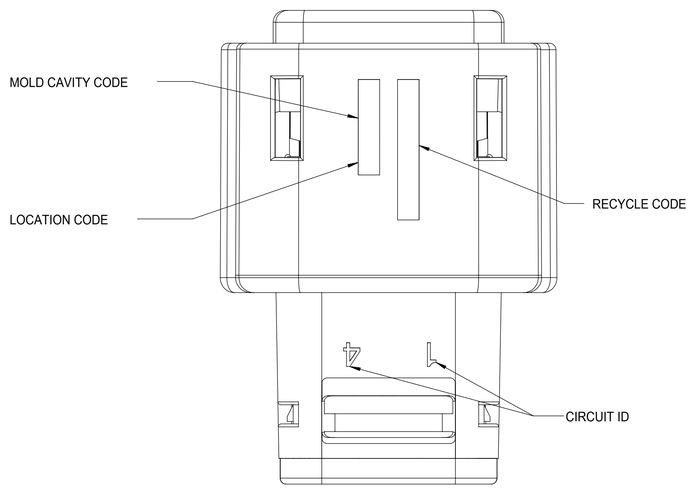

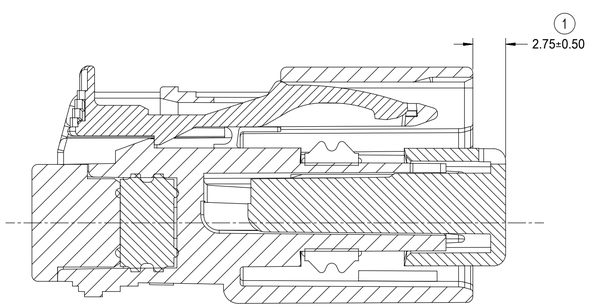

PRIMARY LOCK REINFORCEMENT (PLR) SHOWN
IN PRE-STAGED POSITION

SECTION Z-Z

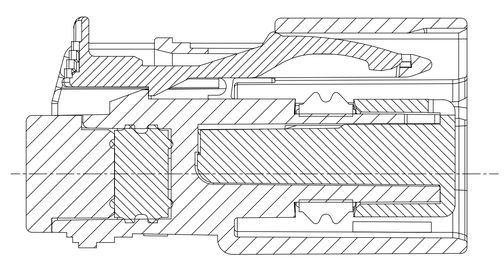

PRIMARY LOCK REINFORCEMENT (PLR) SHOWN
IN FINAL-LOCK POSITION

SECTION Y-Y

CHARTED DIMENSIONS

CONFIGURATION	A	B
MX150 1X4 RECPT SEALED ASSY - STANDARD	36.95 ±0.70	29.14
MX150 1X4 RECPT SEALED ASSY - ERGO	36.95 ±0.90	29.33
MX150 1X4 RECPT SEALED ASSY - SHORTING (SHRT) BAR	36.95 ±0.70	29.14

FUNCTIONAL SYMBOLS
FA = 0
FC = 0
FP = 0
DIVISIONAL SYMBOLS

THIS DRAWING CONTAINS INFORMATION THAT IS PROPRIETARY TO MOLEX ELECTRONIC TECHNOLOGIES, LLC AND SHOULD NOT BE USED WITHOUT WRITTEN PERMISSION

DIMENSION UNITS	SCALE
mm	4:1

GENERAL TOLERANCES (UNLESS SPECIFIED)

ANGULAR TOL	±	3.0 °
4 PLACES	±	
3 PLACES	±	
2 PLACES	±	0.1
1 PLACE	±	0.3
0 PLACES	±	

DRAFT WHERE APPLICABLE MUST REMAIN WITHIN DIMENSIONS

CURRENT REV DESC: SEE REVISION TABLE

EC NO: 674870
DRWN: SCV 2021/08/23
CHK'D: GGA 2021/08/27
APPR: GGA 2021/08/27

INITIAL REVISION:
DRWN: DGRIFFITHS 2010/03/31
APPR: VKOSHY 2010/04/06

molex

MX150 1X4 RECEPTACLE
SEALED ASSEMBLY MAT SEAL

PRODUCT CUSTOMER DRAWING

DOCUMENT NUMBER	DOC TYPE	DOC PART	REVISION
SD-33471-041	PSD	002	W6

THIRD ANGLE PROJECTION	DRAWING	SERIES	MATERIAL NUMBER	CUSTOMER	SHEET NUMBER
	D-SIZE	33471	SEE BOM	GENERAL MARKET	3 OF 6

DOCUMENT STATUS	P1	RELEASE DATE	2021/08/27 04:44:52

FORMAT: molex-B-prod-D
TEMPLATE:
DATE: 2016/01/14

BOM SHEET 1

ASSEMBLY DESCRIPTION	ASSEMBLY PART NUMBER	A	B	C	D	C	C	D	GCO	GCP	GCEO	GCEP	P	PS	M	CPA	1	2	3	4	STATUS	COMMENTS
VOID KEY	33471-0440																					
KEY D W/ SHRT. BAR, GREEN	33471-0439				D				GCO					PS	M						NOT RECOMMENDED	SEE P/N 33471-0481
KEY C W/ SHRT. BAR, BROWN	33471-0438			C					GCO					PS	M						NOT RECOMMENDED	SEE P/N 33471-0480
KEY B W/ SHRT. BAR, LT. GRAY	33471-0437		B						GCO					PS	M							
KEY A W/ SHRT. BAR, BLACK	33471-0436	A							GCO					PS	M						SALEABLE	
VOID KEY	33471-0435																					
KEY D W/O MAT SEAL, GREEN	33471-0434				D				GCO				P								NOT RECOMMENDED	SEE P/N 33471-0479
KEY C W/O MAT SEAL, BROWN	33471-0433			C					GCO				P								NOT RECOMMENDED	SEE P/N 33471-0478
KEY B W/O MAT SEAL, LT. GRAY	33471-0432		B						GCO				P									NOT VALIDATED
KEY A W/O MAT SEAL, BLACK	33471-0431	A							GCO				P								SALEABLE	NOT VALIDATED
VOID KEY	33471-0430																					
KEY D W/ CPA, GREEN	33471-0429				D					GCP			P		M	CPA	1			4	NOT RECOMMENDED	SEE P/N 33471-0477
KEY C W/ CPA, BROWN	33471-0428			C						GCP			P		M	CPA	1			4	NOT RECOMMENDED	SEE P/N 33471-0476
KEY B W/ CPA, LT. GRAY	33471-0427		B							GCP			P		M	CPA	1			4		
KEY A W/ CPA, BLACK	33471-0426	A								GCP			P		M	CPA	1			4	SALEABLE	
VOID KEY	33471-0425																					
KEY D, GREEN	33471-0424				D					GCP			P		M		1			4	NOT RECOMMENDED	SEE P/N 33471-0475
KEY C, BROWN	33471-0423			C						GCP			P		M		1			4	NOT RECOMMENDED	SEE P/N 33471-0474
KEY B, LT. GRAY	33471-0422		B							GCP			P		M		1			4		
KEY A, BLACK	33471-0421	A								GCP			P		M		1			4	SALEABLE	
VOID KEY	33471-0420																					
KEY D W/ CPA, GREEN	33471-0419				D					GCP			P		M	CPA				4	NOT RECOMMENDED	SEE P/N 33471-0473
KEY C W/ CPA, BROWN	33471-0418			C						GCP			P		M	CPA				4	NOT RECOMMENDED	SEE P/N 33471-0472
KEY B W/ CPA, LT. GRAY	33471-0417		B							GCP			P		M	CPA				4		
KEY A W/ CPA, BLACK	33471-0416	A								GCP			P		M	CPA				4	SALEABLE	
VOID KEY	33471-0415																					
KEY D, GREEN	33471-0414				D					GCP			P		M					4	NOT RECOMMENDED	SEE P/N 33471-0471
KEY C, BROWN	33471-0413			C						GCP			P		M					4	NOT RECOMMENDED	SEE P/N 33471-0470
KEY B, LT. GRAY	33471-0412		B							GCP			P		M					4		
KEY A, BLACK	33471-0411	A								GCP			P		M					4	SALEABLE	
KEY C W/ CPA, BLACK	33471-0410					C			GCO				P		M	CPA						
KEY D W/ CPA, GREEN	33471-0409				D				GCO				P		M	CPA					NOT RECOMMENDED	SEE P/N 33471-0465
KEY C W/ CPA, BROWN	33471-0408			C					GCO				P		M	CPA					NOT RECOMMENDED	SEE P/N 33471-0464
KEY B W/ CPA, LT. GRAY	33471-0407		B						GCO				P		M	CPA						
KEY A W/ CPA, BLACK	33471-0406	A							GCO				P		M	CPA					SALEABLE	
VOID KEY	33471-0405																					
KEY D, GREEN	33471-0404				D				GCO				P		M						NOT RECOMMENDED	SEE P/N 33471-0463
KEY C, BROWN	33471-0403			C					GCO				P		M						NOT RECOMMENDED	SEE P/N 33471-0462
KEY B, LT. GRAY	33471-0402		B						GCO				P		M							
KEY A, BLACK	33471-0401	A							GCO				P		M						SALEABLE	

BLOCKED TERMINAL

CAVITY WITH A NUMBER INDICATES BLOCKED TERMINAL POSITION
CAVITY WITHOUT A NUMBER INDICATES OPEN TERMINAL POSITION

DESCRIPTION	COLOR	MATERIAL
RING SEAL	BURNT ORANGE	INHERENTLY LUBRICATED SILICONE
CPA	BRIGHT RED	PBT GF30
MAT SEAL	LIGHT BLUE	INHERENTLY LUBRICATED SILICONE
SHORTING BAR PLR	NATURAL	SPS/NYLON GF20
STANDARD PLR	NATURAL	SPS/NYLON GF20
ERGONOMIC GROMMET CAP, PLUGGED	BLACK	SPS/NYLON GF20
ERGONOMIC GROMMET CAP, OPEN	BLACK	SPS/NYLON GF20
STANDARD GROMMET CAP, PLUGGED	BLACK	SPS/NYLON GF20
STANDARD GROMMET CAP, OPEN	BLACK	SPS/NYLON GF20
HOUSING KEYING OPTION D	STONE GRAY	SPS/NYLON GF20
HOUSING KEYING OPTION C	DARK GRAY	SPS/NYLON GF20
HOUSING KEYING OPTION C	BLACK	SPS/NYLON GF20
HOUSING KEYING OPTION D	GREEN	SPS/NYLON GF20
HOUSING KEYING OPTION C	BROWN	SPS/NYLON GF20
HOUSING KEYING OPTION B	LIGHT GRAY	SPS/NYLON GF20
HOUSING KEYING OPTION A	BLACK	SPS/NYLON GF20

BOM/APPLICABLE COMPONENTS TABLE

TABLE LEGEND

ABREVIATION	COMPONENT
A	HOUSING KEY A
B	HOUSING KEY B
C	HOUSING KEY C
D	HOUSING KEY D
GCO	GROMMET CAP, STANDARD, OPEN
GCP	GROMMET CAP, STANDARD, PLUGGED
GCEO	GROMMET CAP, ERGONOMIC, OPEN
GCEP	GROMMET CAP, ERGONOMIC, PLUGGED
M	MAT SEAL
P	PLR, STANDARD
PS	PLR, SHRT. BAR LIFTER
R	RING SEAL
CPA	CPA

THIS DRAWING CONTAINS INFORMATION THAT IS PROPRIETARY TO MOLEX ELECTRONIC TECHNOLOGIES, LLC AND SHOULD NOT BE USED WITHOUT WRITTEN PERMISSION

FUNCTIONAL SYMBOLS
FA = 0
FC = 0
FP = 0
DIVISIONAL SYMBOLS

DIMENSION UNITS: mm
SCALE

GENERAL TOLERANCES (UNLESS SPECIFIED)

ANGULAR TOL	±	3.0 °
4 PLACES	±	
3 PLACES	±	
2 PLACES	±	0.1
1 PLACE	±	0.3
0 PLACES	±	

DRAFT WHERE APPLICABLE MUST REMAIN WITHIN DIMENSIONS

CURRENT REV DESC: SEE REVISION TABLE

EC NO: 674870
DRWN: SCV 2021/08/23
CHK'D: GGA 2021/08/27
APPR: GGA 2021/08/27

INITIAL REVISION:
DRWN: DGRIFFITHS 2010/03/31
APPR: VKOSHY 2010/04/06

THIRD ANGLE PROJECTION

DRAWING: D-SIZE
SERIES: 33471

molex

MX150 1X4 RECEPTACLE
SEALED ASSEMBLY MAT SEAL

PRODUCT CUSTOMER DRAWING

DOCUMENT NUMBER	DOC TYPE	DOC PART	REVISION
SD-33471-041	PSD	002	W6

MATERIAL NUMBER	CUSTOMER	SHEET NUMBER
SEE BOM	GENERAL MARKET	4 OF 6

DOCUMENT STATUS	P1	RELEASE DATE	2021/08/27	04:44:52

FORMAT: master-tb-prod-D
REVISION: J
DATE: 2006/01/10

BOM SHEET 2

ASSEMBLY DESCRIPTION	ASSEMBLY PART NUMBER	A	B	C	D	C	C	D	GCO	GCP	GCEO	GCEP	P	PS	M	CPA	1	2	3	4	STATUS	COMMENTS
KEY C W/ SHRT. BAR, DARK GRAY	33471-0480						C		GCO					PS	M						SALEABLE	
KEY D W/O MAT SEAL, STONE GRAY	33471-0479							D	GCO				P								SALEABLE	
KEY C W/O MAT SEAL, DARK GRAY	33471-0478						C		GCO				P								SALEABLE	
KEY D W/ CPA, STONE GRAY	33471-0477							D		GCP			P		M	CPA	1			4	SALEABLE	
KEY C W/ CPA, DARK GRAY	33471-0476						C			GCP			P		M	CPA	1			4	SALEABLE	
KEY D, STONE GRAY	33471-0475							D		GCP			P		M		1			4	SALEABLE	
KEY C, DARK GRAY	33471-0474						C			GCP			P		M		1			4	SALEABLE	
KEY D W/ CPA, STONE GRAY	33471-0473							D		GCP			P		M	CPA				4	SALEABLE	
KEY C W/ CPA, DARK GRAY	33471-0472						C			GCP			P		M	CPA				4	SALEABLE	
KEY D, STONE GRAY	33471-0471							D		GCP			P		M					4	SALEABLE	
KEY C, DARK GRAY	33471-0470						C			GCP			P		M					4	SALEABLE	
KEY A, BLACK	33471-0469	A								GCP			P		M			2		4	SALEABLE	
KEY B, W/ CPA, LIGHT GRAY	33471-0468		B							GCP			P		M	CPA		2				
KEY A, BLACK	33471-0467	A								GCP			P		M				3	4	SALEABLE	
KEY B, LIGHT GRAY	33471-0466		B							GCP			P		M		1	2				
KEY D W/ CPA, STONE GRAY	33471-0465							D	GCO				P		M	CPA					SALEABLE	
KEY C W/ CPA, DARK GRAY	33471-0464						C		GCO				P		M	CPA					SALEABLE	
KEY D, STONE GRAY	33471-0463							D	GCO				P		M						SALEABLE	
KEY C, DARK GRAY	33471-0462						C		GCO				P		M						SALEABLE	
KEY A W/ CPA & ERGO. CAP, BLACK	33471-0461	A									GCEO		P		M	CPA					SALEABLE	
VOID KEY	33471-0460																					
KEY A, BLACK	33471-0459	A								GCP			P		M				3		SALEABLE	
KEY A W/ SHRT. BAR, BLACK	33471-0458	A								GCP				PS	M		1			4	SALEABLE	
KEY D W/ SHRT. BAR, GREEN	33471-0457				D					GCP				PS	M					4	NOT RECOMMENDED	SEE P/N 33471-0488
VOID KEY	33471-0456																					
KEY D W/ SHRT. BAR, GREEN	33471-0455				D					GCP				PS	M		1	2	3	4	NOT RECOMMENDED	SEE P/N 33471-0487
KEY C W/ SHRT. BAR, BROWN	33471-0454			C						GCP				PS	M		1	2	3	4	NOT RECOMMENDED	SEE P/N 33471-0486
KEY B W/ SHRT. BAR, LT. GRAY	33471-0453		B							GCP				PS	M		1	2	3	4		
KEY A W/ SHRT. BAR, BLACK	33471-0452	A								GCP				PS	M		1	2	3	4	SALEABLE	
KEY A W/ SHRT. BAR, BLACK	33471-0451	A								GCP				PS	M				3	4	SALEABLE	
VOID KEY	33471-0450																					
KEY D W/ CPA & SHRT. BAR, GREEN	33471-0449				D				GCO					PS	M	CPA					NOT RECOMMENDED	SEE P/N 33471-0485
KEY C W/ CPA & SHRT. BAR, BROWN	33471-0448			C					GCO					PS	M	CPA					NOT RECOMMENDED	SEE P/N 33471-0484
KEY B W/ CPA & SHRT. BAR, LT. GRAY	33471-0447		B						GCO					PS	M	CPA						
KEY A W/ CPA & SHRT. BAR, BLACK	33471-0446	A							GCO					PS	M	CPA					SALEABLE	
VOID KEY	33471-0445																					
KEY D, GREEN	33471-0444				D					GCP			P		M		1	2	3	4	NOT RECOMMENDED	SEE P/N 33471-0483
KEY C, BROWN	33471-0443			C						GCP			P		M		1	2	3	4	NOT RECOMMENDED	SEE P/N 33471-0482
KEY B, LT. GRAY	33471-0442		B							GCP			P		M		1	2	3	4		
KEY A, BLACK	33471-0441	A								GCP			P		M		1	2	3	4	SALEABLE	

BLOCKED TERMINAL

CAVITY WITH A NUMBER INDICATES BLOCKED TERMINAL POSITION
CAVITY WITHOUT A NUMBER INDICATES OPEN TERMINAL POSITION

DESCRIPTION	COLOR	MATERIAL
RING SEAL	BURNT ORANGE	INHERENTLY LUBRICATED SILICONE
CPA	BRIGHT RED	PBT GF30
MAT SEAL	LIGHT BLUE	INHERENTLY LUBRICATED SILICONE
SHORTING BAR PLR	NATURAL	SPS/NYLON GF20
STANDARD PLR	NATURAL	SPS/NYLON GF20
ERGONOMIC GROMMET CAP, PLUGGED	BLACK	SPS/NYLON GF20
ERGONOMIC GROMMET CAP, OPEN	BLACK	SPS/NYLON GF20
STANDARD GROMMET CAP, PLUGGED	BLACK	SPS/NYLON GF20
STANDARD GROMMET CAP, OPEN	BLACK	SPS/NYLON GF20
HOUSING KEYING OPTION D	STONE GRAY	SPS/NYLON GF20
HOUSING KEYING OPTION C	DARK GRAY	SPS/NYLON GF20
HOUSING KEYING OPTION C	BLACK	SPS/NYLON GF20
HOUSING KEYING OPTION D	GREEN	SPS/NYLON GF20
HOUSING KEYING OPTION C	BROWN	SPS/NYLON GF20
HOUSING KEYING OPTION B	LIGHT GRAY	SPS/NYLON GF20
HOUSING KEYING OPTION A	BLACK	SPS/NYLON GF20

BOM/APPLICABLE COMPONENTS TABLE

TABLE LEGEND

ABREVIATION	COMPONENT
A	HOUSING KEY A
B	HOUSING KEY B
C	HOUSING KEY C
D	HOUSING KEY D
GCO	GROMMET CAP, STANDARD, OPEN
GCP	GROMMET CAP, STANDARD, PLUGGED
GCEO	GROMMET CAP, ERGONOMIC, OPEN
GCEP	GROMMET CAP, ERGONOMIC, PLUGGED
M	MAT SEAL
P	PLR, STANDARD
PS	PLR, SHRT. BAR LIFTER
R	RING SEAL
CPA	CPA

FUNCTIONAL SYMBOLS: FA = 0, FC = 0, FP = 0

DIVISIONAL SYMBOLS

DIMENSION UNITS	SCALE
mm	

GENERAL TOLERANCES (UNLESS SPECIFIED)

ANGULAR TOL	±	3.0 °
4 PLACES	±	
3 PLACES	±	
2 PLACES	±	0.1
1 PLACE	±	0.3
0 PLACES	±	

DRAFT WHERE APPLICABLE MUST REMAIN WITHIN DIMENSIONS

THIS DRAWING CONTAINS INFORMATION THAT IS PROPRIETARY TO MOLEX ELECTRONIC TECHNOLOGIES, LLC AND SHOULD NOT BE USED WITHOUT WRITTEN PERMISSION

CURRENT REV DESC: SEE REVISION TABLE

EC NO: 674870
DRWN: SCV 2021/08/23
CHK'D: GGA 2021/08/27
APPR: GGA 2021/08/27

INITIAL REVISION:
DRWN: DGRIFFITHS 2010/03/31
APPR: VKOSHY 2010/04/06

THIRD ANGLE PROJECTION | DRAWING: D-SIZE | SERIES: 33471

molex

MX150 1X4 RECEPTACLE
SEALED ASSEMBLY MAT SEAL

PRODUCT CUSTOMER DRAWING

DOCUMENT NUMBER	DOC TYPE	DOC PART	REVISION
SD-33471-041	PSD	002	W6

MATERIAL NUMBER	CUSTOMER	SHEET NUMBER
SEE BOM	GENERAL MARKET	5 OF 6

DOCUMENT STATUS	P1	RELEASE DATE	2021/08/27 04:44:52

BOM SHEET 3

	ASSEMBLY DESCRIPTION	ASSEMBLY PART NUMBER	A	B	C	D	C	C	D	A	GCO	GCP	GCEO	GCEP	P	PS	M	CPA	1	2	3	4	STATUS	COMMENTS
W6	KEY A W/ CPA, BLACK	33471-0497	A									GCP			P		M	CPA			3	4	SALEABLE	
	KEY A W/ CPA, BLACK	33471-0496	A									GCP			P		M	CPA		2	3	4	SALEABLE	
	KEY A , BLACK	33471-0495	A									GCP			P		M		1				SALEABLE	
	KEY B, LT.GRAY	33471-0494		B								GCP			P		M			2	3		SALEABLE	
	KEY A W/ CPA, BLACK	33471-0493	A									GCP			P		M	CPA		2			SALEABLE	
	KEY A W/ CPA & SHRT. BAR, YELLOW	33471-0492								A	GCO					PS	M	CPA					SALEABLE	
	KEY A W/ CPA, YELLOW	33471-0491								A	GCO				P		M	CPA					SALEABLE	
	KEY A W/ CPA, BLACK	33471-0490	A									GCP			P		M	CPA			3		SALEABLE	
	KEY A , BLACK	33471-0489	A									GCP			P		M			2			SALEABLE	
	KEY D W/ SHRT. BAR, STONE GRAY	33471-0488							D			GCP				PS	M					4	SALEABLE	
	KEY D W/ SHRT. BAR, STONE GRAY	33471-0487							D			GCP				PS	M		1	2	3	4	SALEABLE	
	KEY C W/ SHRT. BAR, DARK GRAY	33471-0486						C				GCP				PS	M		1	2	3	4	SALEABLE	
	KEY D W/ CPA & SHRT. BAR, STONE GRAY	33471-0485							D		GCO					PS	M	CPA					SALEABLE	
	KEY C W/ CPA & SHRT. BAR, DARK GRAY	33471-0484						C			GCO					PS	M	CPA					SALEABLE	
	KEY D, STONE GRAY	33471-0483							D			GCP			P		M		1	2	3	4	SALEABLE	
	KEY C, DARK GRAY	33471-0482						C				GCP			P		M		1	2	3	4	SALEABLE	
	KEY D W/ SHRT. BAR, STONE GRAY	33471-0481							D		GCO					PS	M						SALEABLE	

BLOCKED TERMINAL

CAVITY WITH A NUMBER INDICATES BLOCKED TERMINAL POSITION
CAVITY WITHOUT A NUMBER INDICATES OPEN TERMINAL POSITION

DESCRIPTION	COLOR	MATERIAL
RING SEAL	BURNT ORANGE	INHERENTLY LUBRICATED SILICONE
CPA	BRIGHT RED	PBT GF30
MAT SEAL	LIGHT BLUE	INHERENTLY LUBRICATED SILICONE
SHORTING BAR PLR	NATURAL	SPS/NYLON GF20
STANDARD PLR	NATURAL	SPS/NYLON GF20
ERGONOMIC GROMMET CAP, PLUGGED	BLACK	SPS/NYLON GF20
ERGONOMIC GROMMET CAP, OPEN	BLACK	SPS/NYLON GF20
STANDARD GROMMET CAP, PLUGGED	BLACK	SPS/NYLON GF20
STANDARD GROMMET CAP, OPEN	BLACK	SPS/NYLON GF20
HOUSING KEYING OPTION A	YELLOW	SPS/NYLON GF20
HOUSING KEYING OPTION D	STONE GRAY	SPS/NYLON GF20
HOUSING KEYING OPTION C	DARK GRAY	SPS/NYLON GF20
HOUSING KEYING OPTION C	BLACK	SPS/NYLON GF20
HOUSING KEYING OPTION D	GREEN	SPS/NYLON GF20
HOUSING KEYING OPTION C	BROWN	SPS/NYLON GF20
HOUSING KEYING OPTION B	LIGHT GRAY	SPS/NYLON GF20
HOUSING KEYING OPTION A	BLACK	SPS/NYLON GF20

BOM/APPLICABLE COMPONENTS TABLE

TABLE LEGEND

ABREVIATION	COMPONENT
A	HOUSING KEY A
B	HOUSING KEY B
C	HOUSING KEY C
D	HOUSING KEY D
GCO	GROMMET CAP, STANDARD, OPEN
GCP	GROMMET CAP, STANDARD, PLUGGED
GCEO	GROMMET CAP, ERGONOMIC, OPEN
GCEP	GROMMET CAP, ERGONOMIC, PLUGGED
M	MAT SEAL
P	PLR, STANDARD
PS	PLR, SHRT. BAR LIFTER
R	RING SEAL
CPA	CPA

DOCUMENT STATUS	P1	RELEASE DATE	2021/08/27 04:44:52

FUNCTIONAL SYMBOLS: FA = 0, FC = 0, FP = 0

DIVISIONAL SYMBOLS

THIS DRAWING CONTAINS INFORMATION THAT IS PROPRIETARY TO MOLEX ELECTRONIC TECHNOLOGIES, LLC AND SHOULD NOT BE USED WITHOUT WRITTEN PERMISSION

DIMENSION UNITS: mm
SCALE

GENERAL TOLERANCES (UNLESS SPECIFIED)

ANGULAR TOL	±	3.0 °
4 PLACES	±	
3 PLACES	±	
2 PLACES	±	0.1
1 PLACE	±	0.3
0 PLACES	±	

DRAFT WHERE APPLICABLE MUST REMAIN WITHIN DIMENSIONS

CURRENT REV DESC: SEE REVISION TABLE

EC NO: 674870
DRWN: SCV 2021/08/23
CHK'D: GGA 2021/08/27
APPR: GGA 2021/08/27

INITIAL REVISION:
DRWN: DGRIFFITHS 2010/03/31
APPR: VKOSHY 2010/04/06

molex

MX150 1X4 RECEPTACLE
SEALED ASSEMBLY MAT SEAL

PRODUCT CUSTOMER DRAWING

DOCUMENT NUMBER	DOC TYPE	DOC PART	REVISION
SD-33471-041	PSD	002	W6

THIRD ANGLE PROJECTION	DRAWING	SERIES	MATERIAL NUMBER	CUSTOMER	SHEET NUMBER
	D-SIZE	33471	SEE BOM	GENERAL MARKET	6 OF 6

Mouser Electronics

Authorized Distributor

Click to View Pricing, Inventory, Delivery & Lifecycle Information:

Molex:

33471-0463 33471-0465