PART NUMBER	ENGINEERING NUMBER	FINISH LENGTH
1300660141	CR3C06A30M003	0.98' [0.3M]
1300660143	CR3C06A30M005	1.64' [0.5M]
1300660144	CR3C06A30M010	3.28' [1.0M]

PART NUMBER LEGEND

CR3C06A30M005

LENGTH
M005 = 0.5 METER
M010 = 1 METER
M100 = 10 METER

CABLE LENGTH TOLERANCES
>.3M [1FT]: +19mm-0 [+.75in-0]
.3 - .9M [1 - 3FT]: +44.5mm-0 [+1.75in-0]
.9 - 1.8M [3 - 6FT]: +55.6mm-0 [+2.19in-0]
1.8 - 3.7M [6 - 12FT: +88.9mm-0 [+3.50in-0]
3.7 - 7.3M [12 - 24FT]: +165.1mm-0 [+6.50in-0]
7.3-14.6M [24 - 48FT]: +317.5mm-0 [+12.50in-0]
14.6 - 30.5M [48-100FT]: +622.3mm-0 [+24.50in-0]
OVER 30M [100FT] +2% OF FINISHED LENGTH

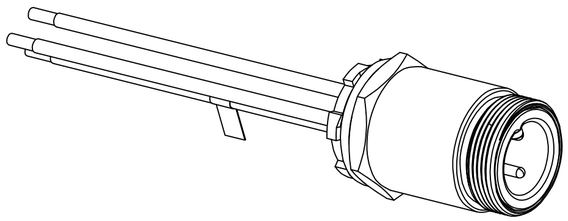

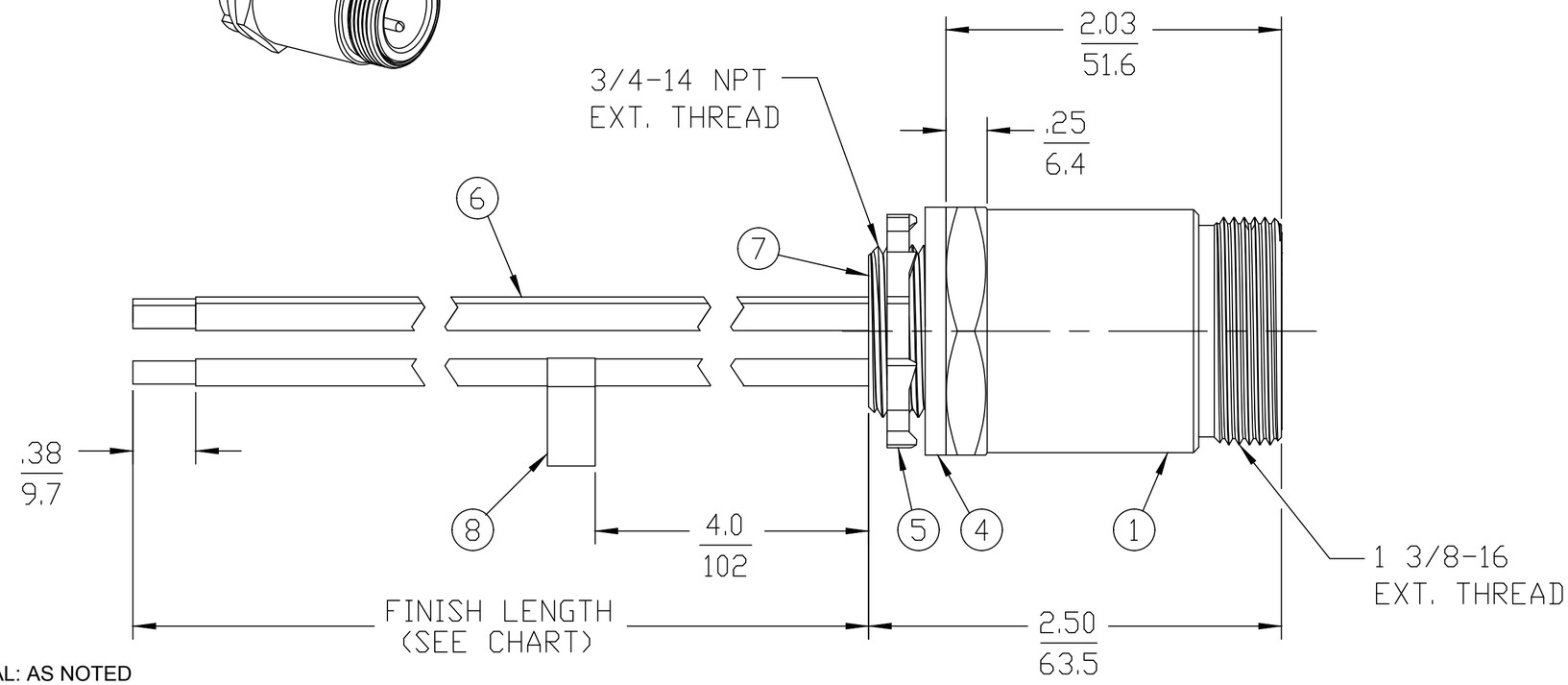

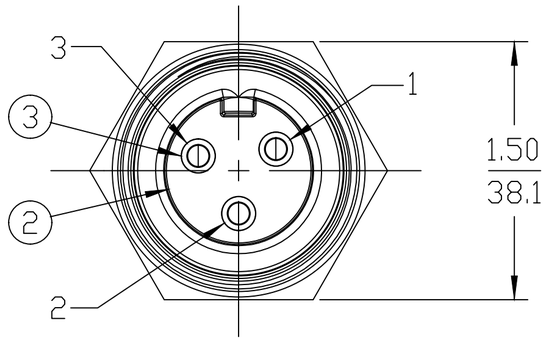

NOTES:
1. MATERIAL: AS NOTED
2. FINISH: AS NOTED
3. ELECTRICAL:
   VOLTAGE: 3P: 630V PER IEC60664
   600V PER UL2237
   CURRENT: 32A
4. TEMP RATING: -20°TO +90°C
5. PROTECTION: IP67 (WHEN MATED)
6. COUPLING THREAD: 1 3/8-16UN
7. UL LISTED FILE: E258922
8. ALL DIMS ARE FOR REFERENCE
   UNLESS NOTED OTHERWISE

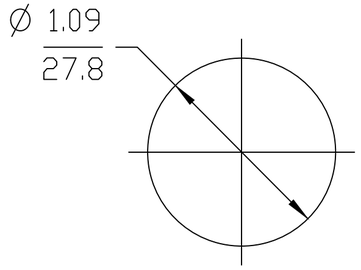

TYPICAL KNOCKOUT

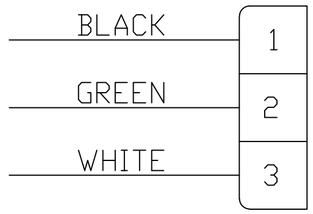

WIRING DIAGRAM

ITEM	QTY.	DESCRIPTION	MATERIAL	FINISH
8	1	FLAG LABEL	VINYL	YELLOW
7	A/R	POTTING	EPOXY	BLACK
6	3	#10-1 UL1015 WIRE (B)	PVC JACKET	SEE WIRING DIAGRAM
5	1	LOCKNUT	STEEL	ZINC PLATED
4	1	GASKET	NEOPRENE	BLACK
3	3	PIN CONTACT	COPPER ALLOY	GOLD PLATED
2	1	MALE INSERT, 3 POLE	PVC	BLACK
1	1	RECEPTACLE SHELL	ALUMINUM	CLEAR ANODIZED

REF. THIS DRAWING SUPERSEDES COCREATE REV. A

UL 1015 WAS THHN
EC NO: IPG2019-0200
DRWN: JCAPPOZZ 2018/11/26
CH'KD: RSTONE ----
APPR: BWOODMAN 2018/12/18
DESCRIPTION
B
REV

QUALITY SYMBOL
▼=0
(C)=0

GENERAL TOLERANCES (UNLESS SPECIFIED)

	mm	INCH
4 PLACES	±---	±---
3 PLACES	±---	±---
2 PLACES	±---	±---
1 PLACE	±---	±---
ANGULAR ±---°		

DRAFT WHERE APPLICABLE MUST REMAIN WITHIN DIMENSIONS

DIMENSION STYLE: IN/MM
SCALE: 4:1
DESIGN UNITS: INCH
THIRD ANGLE PROJECTION

DRAWN BY: JCAPPOZZ DATE: 2018/11/26
CHECKED BY: ---- DATE: ----
APPROVED BY: BWOODMAN DATE: 2018/12/18

TITLE: BRAD POWER MALE, 3/4" NPT, 3 POLE RECEPTACLE ASSEMBLY

molex MOLEX INCORPORATED

MATERIAL NO.: SEE P/N CHART
DOCUMENT NO.: SD-130066-053
SHEET NO.: 1 0F 1
SIZE: C

THIS DRAWING CONTAINS INFORMATION THAT IS PROPRIETARY TO MOLEX INCORPORATED AND SHOULD NOT BE USED WITHOUT WRITTEN PERMISSION

Mouser Electronics

Authorized Distributor

Click to View Pricing, Inventory, Delivery & Lifecycle Information:

Molex:
1300660141