NOTES:
1. ELECTRICAL:
   - VOLTAGE RATING PER IEC 60664: 300V
   - VOLTAGE RATING PER UL: 300V
   - CURRENT: 8A
2. TEMP RATING: -25° TO +80°C
3. PROTECTION: IP67 (WHEN MATED)
4. COUPLING THREAD" 7/8-16
5. AGENCY:
   - UL RECOGNIZED, FILE: E152210
   - CSA CERTIFICATION FILE: LR6837
6 ALL DIMS ARE FOR REFERENCE
   UNLES NOTED OTHERWISE
7. PART NUMBER WITH "H" HAVE
   TWO ID MARKERS ONE ON EACH END

WIRING DIAGRAM

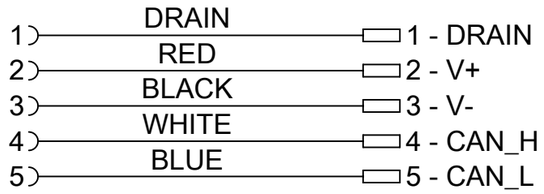


PART No. MATRIX

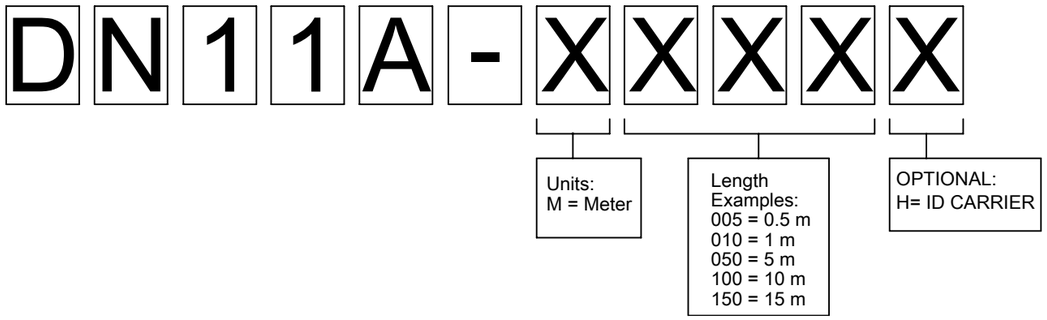


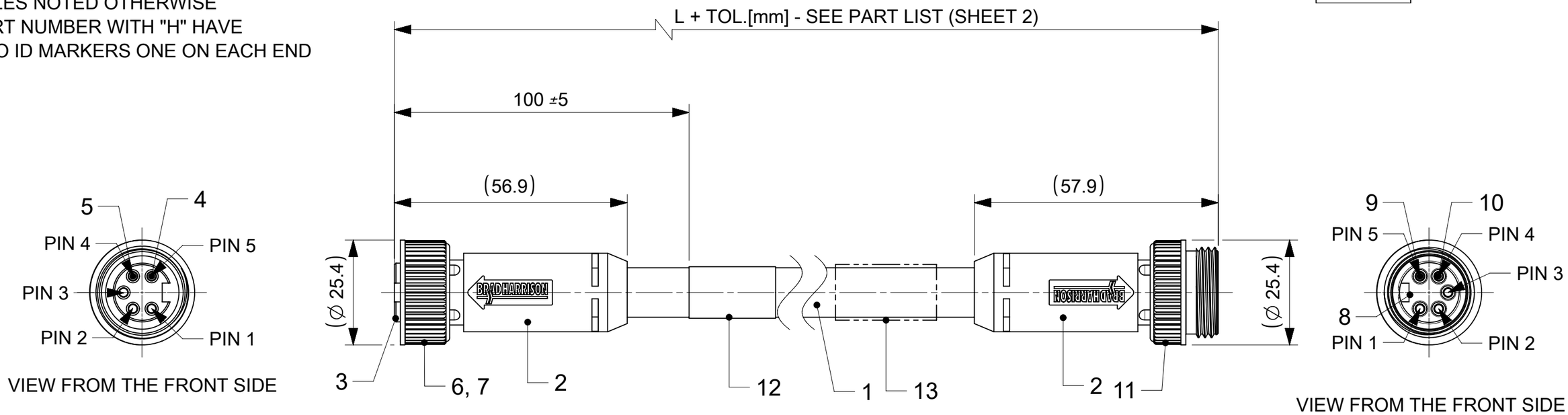


BILL OF MATERIALS

| ITEM | QTY | DESCRIPTION | MATERIAL | FINISH/COLOR | |
|---|---|---|---|---|---|
| 13 | 2 | ID CARRIER | PVC | - | |
| 12 | 1 | LABEL WRAP | VINYL | YELLOW | |
| 11 | 1 | COUPLING NUT A-SIZE EXT. | ZINC | BLACK | |
| 10 | 2 | PIN CONTACT 16 AWG | COPPER | GOLD OVER Ni-PLATED | |
| 9 | 3 | PIN CONTACT 18 AWG | COPPER | GOLD OVER Ni-PLATED | |
| 8 | 1 | HOUSING A-SIZE 5P MALE | ARNITEL | BLACK | B |
| 7 | 1 | FRICTION RING A-SIZE | NYLON | GRAY | |
| 6 | 1 | MC COUPLING NUT A-SIZE | ZINC | BLACK | |
| 5 | 2 | MC SOCKET SLEEVE ASSY 16 AWG | COPPER | GOLD OVER Ni-PLATED | |
| 4 | 3 | MC SOCKET SLEEVE ASSY 18 AWG | COPPER | GOLD OVER Ni-PLATED | |
| 3 | 1 | HOUSING A-SIZE 5P FEMALE | ARNITEL | BLACK | B |
| 2 | - | MOULDING MATERIAL | ARNITEL | BLACK | B |
| 1 | - | TRUNK CABLE 19X30 AWG OD=12 | PVC | GRAY | |

THIS DRAWING CONTAINS INFORMATION THAT IS PROPRIETARY TO MOLEX ELECTRONIC TECHNOLOGIES, LLC AND SHOULD NOT BE USED WITHOUT WRITTEN PERMISSION

FUNCTIONAL SYMBOLS: FA = 0, FC = 0, FP = 0
DIVISIONAL SYMBOLS

DIMENSION UNITS: mm
SCALE: 1:1
GENERAL TOLERANCES (UNLESS SPECIFIED)

| | | |
|---|---|---|
| ANGULAR TOL | ± | ° |
| 4 PLACES | ± | |
| 3 PLACES | ± | |
| 2 PLACES | ± | 0.05 |
| 1 PLACE | ± | 0.3 |
| 0 PLACES | ± | 0.5 |

DRAFT WHERE APPLICABLE MUST REMAIN WITHIN DIMENSIONS

CURRENT REV DESC: INSERT AND OVM MATERIAL CHANGE

EC NO: 651030
DRWN: MKOWALCZYK01 2020/04/27
CHK'D: ASZELAG 2020/12/09
APPR: DSTACHOWIAK 2020/12/10

INITIAL REVISION:
DRWN: MKOWALCZYK01 2018/09/07
APPR: MMATLA 2018/09/11

THIRD ANGLE PROJECTION
DRAWING: A3-SIZE
SERIES: 130025

molex

CSE MC 5P FE STR PVC MA STR 25M DE

PRODUCT CUSTOMER DRAWING

| DOCUMENT NUMBER | DOC TYPE | DOC PART | REVISION |
|---|---|---|---|
| 1300250051 | PSD | 000 | B |

| MATERIAL NUMBER | CUSTOMER | SHEET NUMBER |
|---|---|---|
| SEE SHEET 2 | GENERAL MARKET | 1 OF 2 |

| DOCUMENT STATUS | P1 | RELEASE DATE | 2020/12/10 07:46:39 |
|---|---|---|---|

FORMAT: master-tb-prod-A3
REVISION: J
DATE: 2020/01/14

PART LIST

| MOLEX PN | ENGINEERING NO. | LENGTH + TOL.[mm] |
|---|---|---|
| 1300240329 | DN11A-M650 | 65000 + 1300 |
| 1300250051 | DN11A-M005 | 500 + 45 |
| 1300250054 | DN11A-M010 | 1000 + 56 |
| 1300250058 | DN11A-M015 | 1500 + 56 |
| 1300250061 | DN11A-M020 | 2000 + 89 |
| 1300250067 | DN11A-M030 | 3000 + 89 |
| 1300250071 | DN11A-M040 | 4000 + 165 |
| 1300250073 | DN11A-M050 | 5000 + 165 |
| 1300250076 | DN11A-M060 | 6000 + 165 |
| 1300250079 | DN11A-M070 | 7000 + 165 |
| 1300250081 | DN11A-M080 | 8000 + 317 |
| 1300250083 | DN11A-M090 | 9000 + 317 |
| 1300250085 | DN11A-M100 | 10000 + 317 |
| 1300250087 | DN11A-M120 | 12000 + 317 |
| 1300250090 | DN11A-M130 | 13000 + 317 |
| 1300250091 | DN11A-M140 | 14000 + 317 |
| 1300250092 | DN11A-M150 | 15000 + 610 |
| 1300250095 | DN11A-M180 | 18000 + 610 |
| 1300250097 | DN11A-M200 | 20000 + 610 |
| 1300250099 | DN11A-M210 | 21000 + 610 |
| 1300250102 | DN11A-M240 | 24000 + 610 |
| 1300250103 | DN11A-M250 | 25000 + 610 |
| 1300250105 | DN11A-M270 | 27000 + 610 |
| 1300250108 | DN11A-M300 | 30000 + 610 |

| MOLEX PN | ENGINEERING NO. | LENGTH + TOL.[mm] |
|---|---|---|
| 1300250114 | DN11A-M350 | 35000 + 700 |
| 1300250117 | DN11A-M400 | 40000 + 800 |
| 1300250119 | DN11A-M450 | 45000 + 900 |
| 1300250122 | DN11A-M500 | 50000 + 1000 |
| 1300250128 | DN11A-M750 | 75000 + 1500 |
| 1300250649 | DN11A-M005H | 500 + 45 |
| 1300250652 | DN11A-M050H | 5000 + 165 |
| 1300250654 | DN11A-M060H | 6000 + 165 |

THIS DRAWING CONTAINS INFORMATION THAT IS PROPRIETARY TO MOLEX ELECTRONIC TECHNOLOGIES, LLC AND SHOULD NOT BE USED WITHOUT WRITTEN PERMISSION

FUNCTIONAL SYMBOLS
FA = 0
FC = 0
FP = 0
DIVISIONAL SYMBOLS

| DIMENSION UNITS | SCALE |
|---|---|
| mm | 1:1 |

GENERAL TOLERANCES (UNLESS SPECIFIED)

| | | |
|---|---|---|
| ANGULAR TOL | ± | ° |
| 4 PLACES | ± | |
| 3 PLACES | ± | |
| 2 PLACES | ± | 0.05 |
| 1 PLACE | ± | 0.3 |
| 0 PLACES | ± | 0.5 |

DRAFT WHERE APPLICABLE MUST REMAIN WITHIN DIMENSIONS

CURRENT REV DESC: INSERT AND OVM MATERIAL CHANGE

EC NO: 651030
DRWN: MKOWALCZYK01 2020/04/27
CHK'D: ASZELAG 2020/12/09
APPR: DSTACHOWIAK 2020/12/10

INITIAL REVISION:
DRWN: MKOWALCZYK01 2018/09/07
APPR: MMATLA 2018/09/11

THIRD ANGLE PROJECTION

| DRAWING | SERIES |
|---|---|
| A4-SIZE | 130025 |

molex

CSE MC 5P FE STR PVC MA STR 25M DE

PRODUCT CUSTOMER DRAWING

| DOCUMENT NUMBER | DOC TYPE | DOC PART | REVISION |
|---|---|---|---|
| 1300250051 | PSD | 000 | B |

| MATERIAL NUMBER | CUSTOMER | SHEET NUMBER |
|---|---|---|
| SEE PART LIST | GENERAL MARKET | 2 OF 2 |

| DOCUMENT STATUS | P1 | RELEASE DATE | 2020/12/10 07:46:39 |
|---|---|---|---|

FORMAT: master-tb-prod-A4
REVISION: J
DATE: 2020/01/14

| MATERIAL NUMBER | ENGINEERING NUMBER | FINISHED LENGTH |
|---|---|---|
| 1300250048 | DN11A-M003 | 0.3M [1FT] |
| 1300250652 | DN11A-M050H | 5M [16 FT 5IN] |
| 1300250133 | DN11A-T100 | 100M [328FT 1IN] |
| 1300250596 | DN11A-T200 | 200M [656FT 2IN] |

(G)

# PART NO. MATRIX

DN11A-M003H

FINISHED LENGTH:
M005= 0.5 METER
M010= 1 METER
M100= 10 METER
T100= 100 METER
T200= 200 METER

ID CARRIER
H - SEE NOTE 9
BLANK - NO ID CARRIER

CABLE LENGTH TOLERANCES
<.3M [1FT]: +19mm-0 [ +.75in-0]
.3 - .9M [1 - 3FT]: +44.5mm-0 [+1.75in-0]
.9 - 1.8M [3 - 6FT]: +55.6mm-0 [+2.19in-0]
1.8 - 3.7M [6 - 12FT: +88.9mm-0 [+3.50in-0]
3.7 - 7.3M [12 - 24FT]: +165.1mm-0 [+6.50in-0]
7.3-14.6M [24 - 48FT]: +317.5mm-0 [+12.50in-0]
14.6 - 30.5M [48-100FT]: +622.3mm-0 [+24.50in-0]
OVER 30M [100FT] +2% OF FINISHED LENGTH

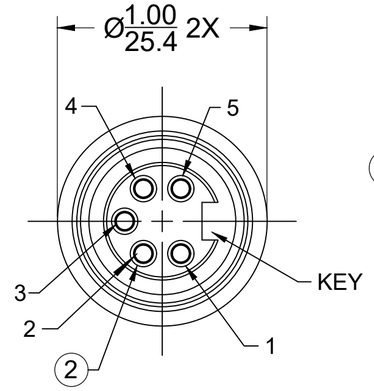


FEMALE FACE VIEW

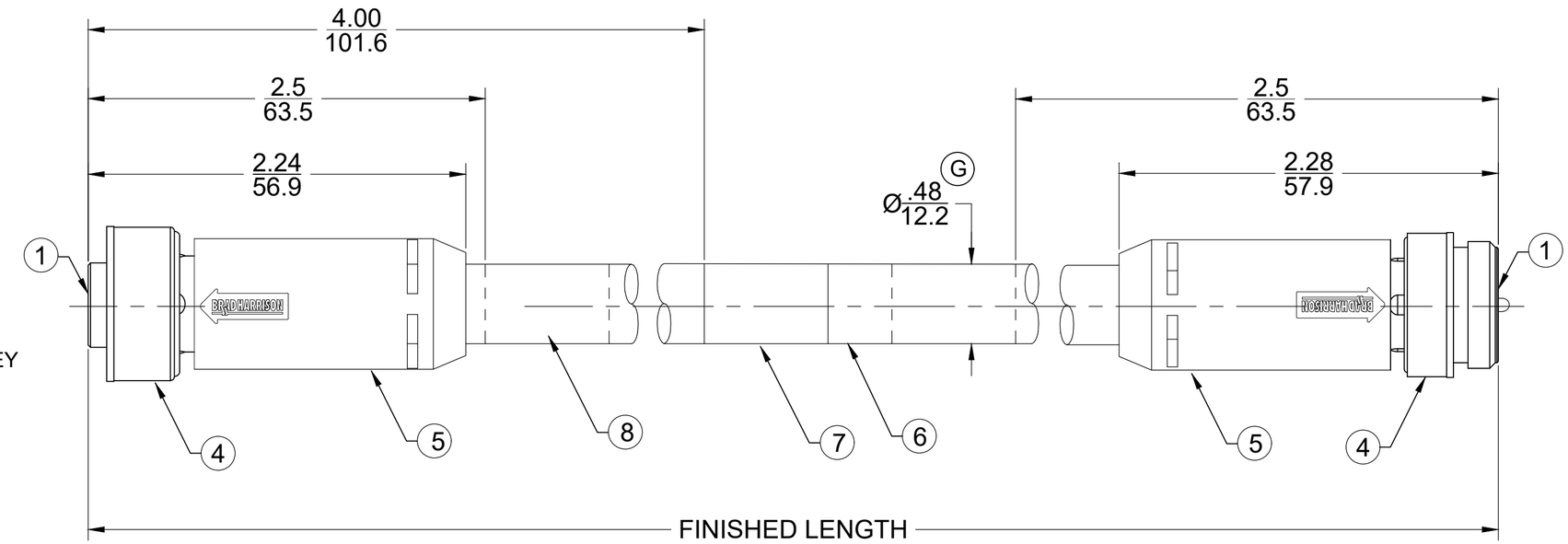


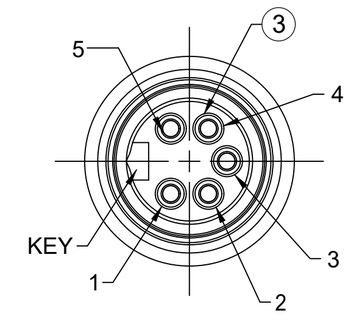


MALE FACE VIEW

## SCHEMATIC

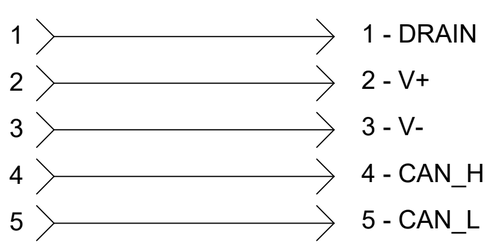


| ITEM | COMPONENT | MATERIAL | FINISH |
|---|---|---|---|
| 1 | INSERTS | TPE | GRAY |
| 2 | CONTACT SOCKET | COPPER ALLOY | GOLD OVER NICKEL |
| 3 | CONTACT PIN | COPPER ALLOY | GOLD OVER NICKEL |
| 4 | COUPLING NUTS | ZINC DIE CAST | BLACK E-COATED |
| 5 | OVERMOLDS | TPE | GRAY |
| 6 | TRUNK CABLE 2TPR CORD 15/18AWG | PVC | GRAY |
| 7 | LABEL | VINYL | BLACK/YELLOW |
| 8 | ID CARRIER | PVC | CLEAR |

(G) (G)

NOTES:
1. MATERIAL: AS NOTED
2. FINISH: AS NOTED
3. ELECTRICAL:
   VOLTAGE RATING PER IEC 60664: 300V
   VOLTAGE RATING PER UL: 300V
   CURRENT: 8A
4. TEMP RATING: -20° TO +60°C (G)
5. PROTECTION: IP67 (WHEN MATED)
6. COUPLING THREAD: 7/8-16
7. UL RECOGNIZED FILE: E152210
   CSA CERTIFIED FILE: LR6837
8. ALL DIMENSIONS ARE FOR REFERENCE UNLESS TOLERANCED OR NOTED OTHERWISE
9. PART NUMBERS WITH "H" HAVE TWO ID MARKERS ONE ON EACH END

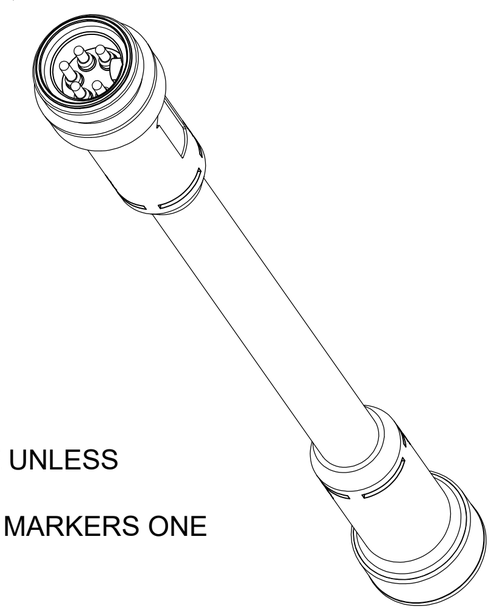

THIS DRAWING CONTAINS INFORMATION THAT IS PROPRIETARY TO MOLEX ELECTRONIC TECHNOLOGIES, LLC AND SHOULD NOT BE USED WITHOUT WRITTEN PERMISSION

FUNCTIONAL SYMBOLS: FA=0, FC=0, FP=0
DIVISIONAL SYMBOLS

| DIMENSION UNITS | SCALE |
|---|---|
| INCH/MM | NTS |

GENERAL TOLERANCES (UNLESS SPECIFIED)

| | mm | INCH |
|---|---|---|
| 4 PLACES | ±---- | ±---- |
| 3 PLACES | ±---- | ±---- |
| 2 PLACES | ±---- | ±---- |
| 1 PLACE | ±---- | ±---- |
| 0 PLACES | ±---- | ±---- |
| ANGULAR TOL ± ---- ° | | |

DRAFT WHERE APPLICABLE MUST REMAIN WITHIN DIMENSIONS

CURRENT REV DESC: ITEM# 1 & 5 WERE PVC. UPDATED TEMP RATING. ADDED CABLE DIA. MODIFIED MATERIAL NUMBER TABLE

| | | |
|---|---|---|
| EC NO: | 645633 | |
| DRWN: | ABENJAMINLW | 2020/09/02 |
| CHK'D: | RSTONE | 2020/09/29 |
| APPR: | BWOODMAN | 2020/10/23 |
| INITIAL REVISION: | | |
| DRWN: | BWOODMAN | 2009/03/16 |
| APPR: | JFMURPHY | 2009/03/31 |

molex

MINI-CHANGE DEVICENET, A-SIZE, 5 POLE, MALE-FEMALE, STRAIGHT, SINGLE KEY, 15/18 AWG

PRODUCT CUSTOMER DRAWING

| DOCUMENT NUMBER | DOC TYPE | DOC PART | REVISION |
|---|---|---|---|
| SD-130025-001 | PSD | 001 | G |

| THIRD ANGLE PROJECTION | DRAWING | SERIES | MATERIAL NUMBER | CUSTOMER | SHEET NUMBER |
|---|---|---|---|---|---|
| | C-SIZE | 130025 | SEE CHART | GENERAL MARKET | 1 OF 1 |

| DOCUMENT STATUS | P1 | RELEASE DATE | 2020/10/23 13:29:03 |
|---|---|---|---|

FORMAT: IN-ACAD-tb-prod-C
REVISION: B
DATE: 2020/01/14

# Mouser Electronics

Authorized Distributor

Click to View Pricing, Inventory, Delivery & Lifecycle Information:

Molex:
1300250076 1300250071 1300250079 1300250085 1300250103 1300250108 1300250058 1300250081 1300250090 1300250091 1300250122