molex
one company › a world of innovation

This document was generated on 12/17/2019

PLEASE CHECK WWW.MOLEX.COM FOR LATEST PART INFORMATION

Part Number: 0751962512

Status: Active

Overview: VHDM L-Series Backplane Connectors

Description: VHDM L-Series Single-Ended Backplane Header, 2.00mm Pitch, Right-Angle, 6 Rows, Shield End Version, 150 Circuits, 25 Columns, Pin Length 6.25m, Key Orientation A, Lead-Free

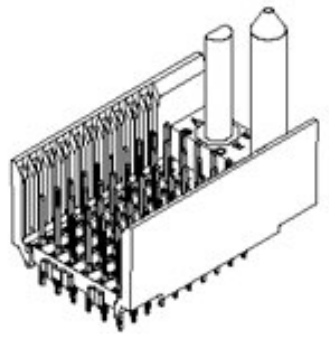

Series image - Reference only

Documents:

Drawing (PDF)

RoHS Certificate of Compliance (PDF)

Product Specification PS-74031-999-001 (PDF)

General

Product Family	Backplane Connectors
Series	75196
Application	Backplane
Application Tooling Documents	TM-622010999
Comments	Keying Position A, Keying Position A
Component Type	PCB Header
Overview	VHDM L-Series Backplane Connectors
Product Name	VHDM L-Series
UPC	822350644099

Physical

Circuits (Loaded)	150
Circuits (maximum)	150
Color - Resin	Black
Durability (mating cycles max)	200
First Mate / Last Break	No
Guide to Mating Part	Yes
Keying to Mating Part	Yes
Material - Metal	High Performance Alloy (HPA), Stainless Steel
Material - Plating Mating	Gold
Material - Plating Termination	Tin
Material - Resin	High Temperature Thermoplastic
Net Weight	10.213/g
Number of Columns	25
Number of Pairs	Open Pin Field
Number of Rows	6
Orientation	Vertical
PC Tail Length	2.50mm
PCB Locator	No
PCB Retention	Yes
PCB Thickness - Recommended	1.80mm
Packaging Type	Tube
Pitch - Mating Interface	2.00mm
Pitch - Termination Interface	2.00mm
Plating min - Mating	0.762µm
Plating min - Termination	0.762µm
Polarized to PCB	No
Stackable	No
Surface Mount Compatible (SMC)	Yes
Temperature Range - Operating	105°C
Termination Interface: Style	Through Hole - Compliant Pin

Electrical

Current - Maximum per Contact	1.0A
Data Rate	622.0 Mbps

EU ELV
Not Relevant

EU RoHS
Compliant

China RoHS

REACH SVHC
Not Contained Per - ED/71/2019 (16 July 2019)

Halogen-Free Status
Low-Halogen

For more information, please visit Contact US

China ROHS	Green Image
ELV	Not Relevant
RoHS Phthalates	Not Contained

Search Parts in this Series
75196 Series

Mates With
75189 VHDM L-Series Board-to-Board Daughtercard

Use With
Backplane Modules

Application Tooling | **FAQ**

Tooling specifications and manuals are found by selecting the products below. Crimp Height Specifications are then contained in the Application Tooling Specification document.

Global

Description	Product #
Signal Pin Inserter Repair Tool	622015700
Insertion Module for Standard Shield Signal Header, 6-	622020208

Real Signals (per 25mm)	75	Row by 25-Wide, 50.00mm
Shielded	No	
Voltage - Maximum	120V AC (RMS)/DC	

Solder Process Data

Lead-freeProcess Capability	N/A

Material Info

Reference - Drawing Numbers

Product Specification	PS-74031-999-001
Sales Drawing	SD-75196-001

This document was generated on 12/17/2019

PLEASE CHECK WWW.MOLEX.COM FOR LATEST PART INFORMATION

Mouser Electronics

Authorized Distributor

Click to View Pricing, Inventory, Delivery & Lifecycle Information:

Molex:
75196-2512