molex
one company › a world of innovation

This document was generated on 07/27/2021

PLEASE CHECK WWW.MOLEX.COM FOR LATEST PART INFORMATION

Part Number: 0398800314
Status: Active
Overview: Eurostyle Terminal Blocks
Description: 5.08mm Pitch Beau Eurostyle Low Profile, Fixed Block, Modular, 14 Circuits

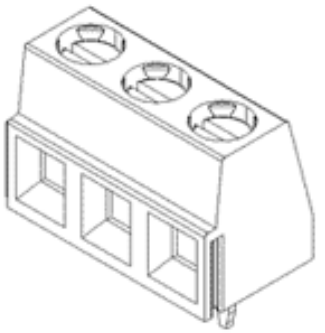

Series image - Reference only

Documents:

3D Model	Drawing (PDF)
3D Model (PDF)	RoHS Certificate of Compliance (PDF)

Agency Certification

UL	E48521

General

Product Family	Terminal Blocks
Series	39880
Application	N/A
Component Type	One Piece
Overview	Eurostyle Terminal Blocks
Product Name	Eurostyle Fixed Mount
Type	Euro Block
UPC	756054903926

Physical

Circuits (Loaded)	14
Entry Angle	Horizontal
Flammability	94V-0
Lock to Mating Part	None
Number of Rows	1
Orientation	Vertical
PC Tail Length	3.50mm
PCB Retention	None
PCB Thickness - Recommended	2.40mm
Panel Mount	No
Pitch - Mating Interface	5.08mm
Pitch - Termination Interface	5.08mm
Polarized to Mating Part	N/A
Shrouded	Fully
Stackable	Yes
Temperature Range - Operating	105°C
Wire Size AWG	16, 18, 20, 22, 24, 26, 28, 30
Wire Size mm²	0.20-1.50

Electrical

Current - Maximum per Contact	13.5A
Voltage - Maximum	300V

Solder Process Data

Lead-freeProcess Capability	WAVE

Material Info

Engineering Number	MX-MSB14005-0N

Reference - Drawing Numbers

Sales Drawing	SD-39880-003

EU ELV
Not Relevant

EU RoHS
Not Reviewed

China RoHS

REACH SVHC
Not Reviewed

Halogen-Free Status
Not Reviewed

For more information, please visit Contact US

China ROHS	Not Reviewed
ELV	Not Relevant
RoHS Phthalates	Not Reviewed

Search Parts in this Series
39880 Series

PLEASE CHECK WWW.MOLEX.COM FOR LATEST PART INFORMATION

Mouser Electronics

Authorized Distributor

Click to View Pricing, Inventory, Delivery & Lifecycle Information:

Molex:
39880-0314