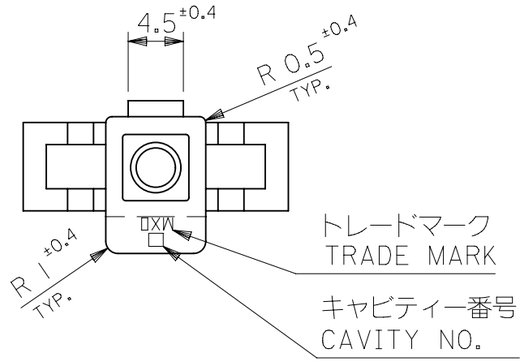

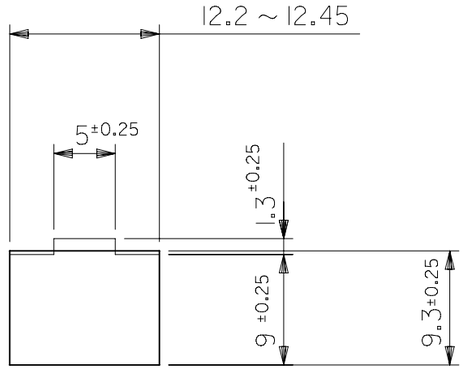

パネル取付穴推奨寸法（厚さ2．0最大）

ハウジングの装着はパネル穴打抜き方向より行うこと

RECOMMENDED PANEL HOLE DIMENSION(THK. 2.0 MAX.)
ATTACH THE HOUSING FROM THE DIRECTION OF
PANEL HOLE PUNCHED OUT

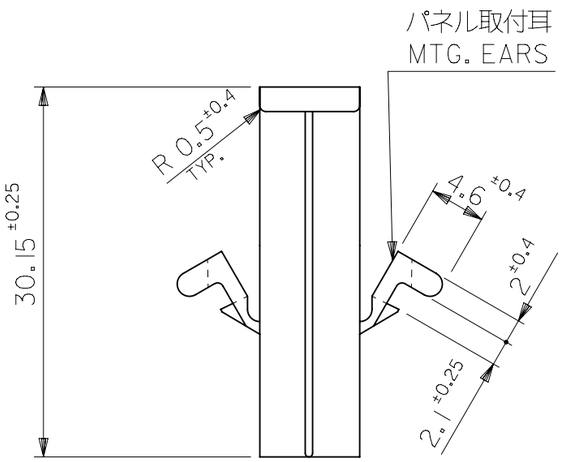

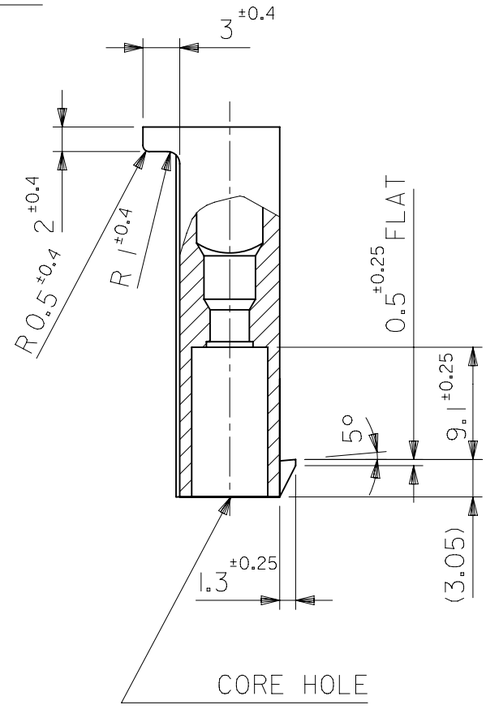

注記
NOTE
（　　）内寸法は参考値
DIMENSIONS IN ( ) ARE REFERENCE

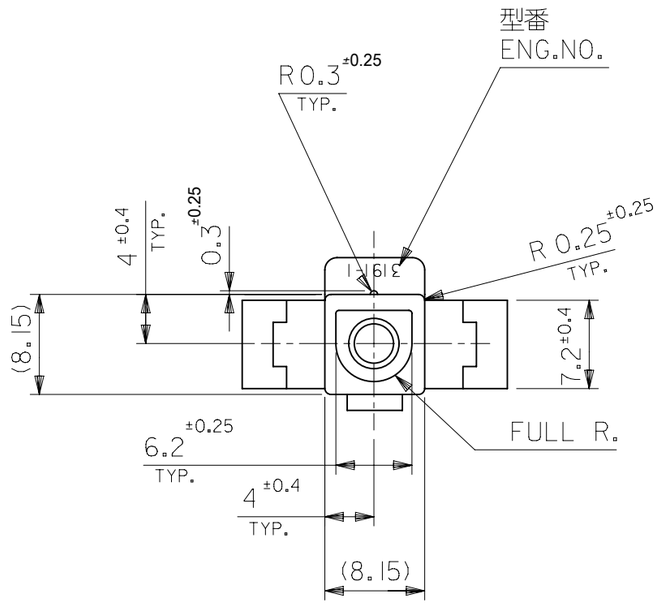

自然色 NATURAL	39-03-6010	3191-01P	NYLON66	94V-2
COLOR	POLYBAG PACKAGE	モデル番号 MODEL No.	材質 MATERIAL	UL
	オ - ダー番号 ORDER NO.			

PENDING APPROVAL

THIS DRAWING CONTAINS INFORMATION THAT IS PROPRIETARY TO MOLEX ELECTRONIC TECHNOLOGIES, LLC AND SHOULD NOT BE USED WITHOUT WRITTEN PERMISSION

DIMENSION UNITS	SCALE
mm	2:1

GENERAL TOLERANCES (UNLESS SPECIFIED)

	MM	INCH
4 PLACES	±	±
3 PLACES	±	±
2 PLACES	±	±
1 PLACE	±	±
0 PLACES	±	±
ANGULAR TOL	± °	

DRAFT WHERE APPLICABLE MUST REMAIN WITHIN DIMENSIONS

CURRENT REV DESC: OBSOLETE PART NUMBERS

EC NO: 650267
DRWN: SKANDB 2020/10/19
CHK'D:
APPR:

INITIAL REVISION:
DRWN: M.NABEI 2007/05/10
APPR: N.UKITA 2007/05/10

THIRD ANGLE PROJECTION | DRAWING: A3-SIZE | SERIES: 3191

molex

1 CKT. PLUG HS'G
(.093 DIA. TERMINAL)

PRODUCT CUSTOMER DRAWING

DOCUMENT NUMBER	DOC TYPE	DOC PART	REVISION
SD-3191-001	PSD	001	D

MATERIAL NUMBER	CUSTOMER	SHEET NUMBER
SEE TABLE	GENERAL MARKET	1 OF 1

DOCUMENT STATUS	RQ	RELEASE DATE	

FORMAT: Met-lega-master-tb-prod-A3
REVISION: E
DATE: 2020/01/14

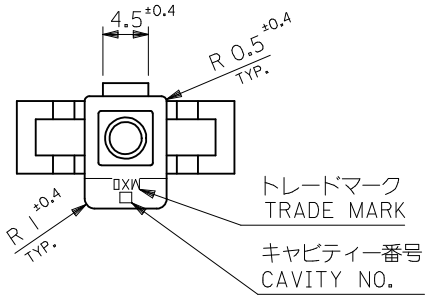

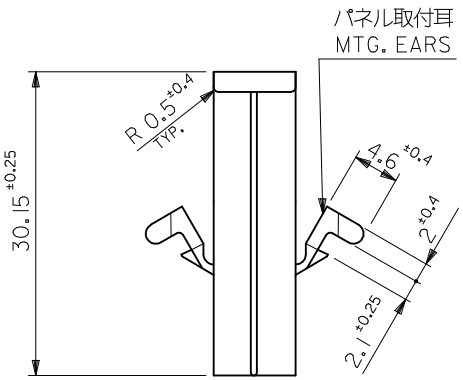

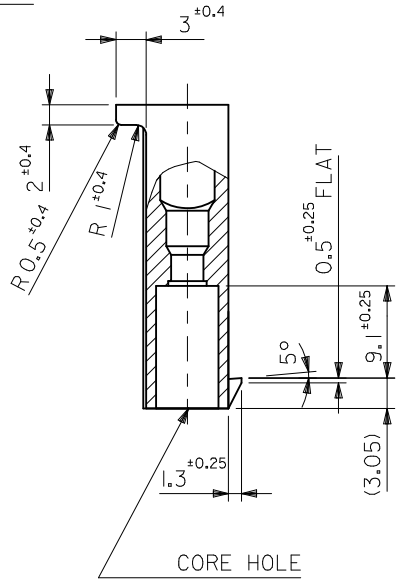

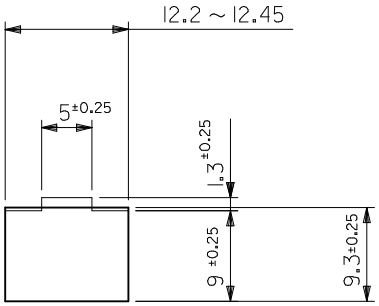

パネル取付穴推奨寸法（厚さ2．0最大）
ハウジングの装着はパネル穴打抜き方向より行うこと

RECOMMENDED PANEL HOLE DIMENSION(THK. 2.0 MAX.)
ATTACH THE HOUSING FROM THE DIRECTION OF
PANEL HOLE PUNCHED OUT

注記
NOTE
（　）内寸法は参考値
DIMENSIONS IN ( ) ARE REFERENCE

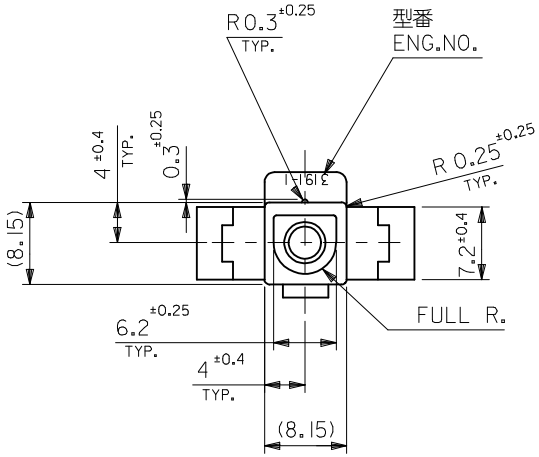

39-03-6011	3191-01P-201	NYLON66	94V-0
39-03-6010	3191-01P	NYLON66	94V-2
POLYBAG PACKAGE	モデル番号 MODEL No.	材質 MATERIAL	UL
オーダー番号 ORDER NO.			

REVISED EC NO: J2013-0829	2013/01/31		
DRWN:KWASHIO	2013/01/31		
CH'KD:KASAKAWA	2013/04/16		
APPR:YOITO			
REV	DESCRIPTION		

GENERAL TOLERANCES (UNLESS SPECIFIED)

10 UNDER	±---
10 OVER 30 UNDER	±---
30 OVER	±---
ANGULAR	±--- °

DRAFT WHERE APPLICABLE MUST REMAIN WITHIN DIMENSIONS

DIMENSION STYLE: MM ONLY	SCALE: 2:1	DESIGN UNITS: METRIC	THIRD ANGLE PROJECTION
DRAWN BY: H.IIJIMA	DATE: '96/06/21	TITLE: 1CKT. PLUG HS'G (.093 DIA. TERMINAL)	
CHECKED BY: M.FUKUSHIMA	DATE: '96/06/21		
APPROVED BY: M.ENOMOTO	DATE: '96/06/21	molex	
MATERIAL NO.: SEE TABLE		DOCUMENT NO.: SD-3191-006	SHEET NO.: 1 OF 1
SIZE: A3			

THIS DRAWING CONTAINS INFORMATION THAT IS PROPRIETARY TO MOLEX INCORPORATED AND SHOULD NOT BE USED WITHOUT WRITTEN PERMISSION

Mouser Electronics

Authorized Distributor

Click to View Pricing, Inventory, Delivery & Lifecycle Information:

Molex:

39-01-8019 39-01-9010