MikroElektronika
DEVELOPMENT TOOLS | COMPILERS | BOOKS

SPECIFICATION

CUSTOMER : MIKROELEKTRONIKA

MODULE NO.: **WH2004L-TMI-ET#**

APPROVED BY: **(FOR CUSTOMER USE ONLY)**	**PCB VERSION:** **DATA:**

SALES BY	APPROVED BY	CHECKED BY	PREPARED BY

VERSION	DATE	REVISED PAGE NO.	SUMMARY
A	2008/6/25	21	Modify backlight information.

MikroElektronika
DEVELOPMENT TOOLS | COMPILERS | BOOKS

MODLE NO :

DOC. FIRST ISSUE

RECORDS OF REVISION

VERSION	DATE	REVISED PAGE NO.	SUMMARY
0	2006-10-20		First issue
A	2008/6/25	21	Modify backlight information.

Contents

1.Module Classification Information

2.Precautions in use of LCD Modules

3.General Specification

4.Absolute Maximum Ratings

5.Electrical Characteristics

6.Optical Characteristics

7.Interface Pin Function

8.Contour Drawing & Block Diagram

9.Function Description

10.Character Generator ROM Pattern

11.Instruction Table

12.Timing Characteristics

13.Initializing of LCM

14.Reliability

15.Backlight Information

16. Inspection specification

17. Material List of Components for RoHs

1.Module Classification Information

W H 2 0 0 4 L－ T M I－ ET#
① ② ③ ④ ⑤ ⑥ ⑦ ⑧

① Brand：WINSTAR DISPLAY CORPORATION

② Display Type：H→Character Type, G→Graphic Type

③ Display Font：Character 20 words, 4Lines.

④ Model serials no.

⑤ Backlight Type：

N→Without backlight	T→LED, White
B→EL, Blue green	A→LED, Amber
D→EL, Green	R→LED, Red
W→EL, White	O→LED, Orange
F→CCFL, White	G→LED, Green
Y→LED, Yellow Green	

⑥ LCD Mode：

B→TN Positive, Gray	T→FSTN Negative
N→TN Negative,	
G→STN Positive, Gray	
Y→STN Positive, Yellow Green	
M→STN Negative, Blue	
F→FSTN Positive	

⑦ LCD Polarize Type/ Temperature range/ View direction

A→Reflective, N.T, 6:00	H→Transflective, W.T,6:00
D→Reflective, N.T, 12:00	K→Transflective, W.T,12:00
G→Reflective, W. T, 6:00	C→Transmissive, N.T,6:00
J→Reflective, W. T, 12:00	F→Transmissive, N.T,12:00
B→Transflective, N.T,6:00	I→Transmissive, W. T, 6:00
E→Transflective, N.T.12:00	L→Transmissive, W.T,12:00

⑧ Special Code

ET : English and European standard font
#:Fit in with the ROHS Directions and regulations

2.Precautions in use of LCD Modules

(1)Avoid applying excessive shocks to the module or making any alterations or modifications to it.
(2)Don't make extra holes on the printed circuit board, modify its shape or change the components of LCD module.
(3)Don't disassemble the LCM.
(4)Don't operate it above the absolute maximum rating.
(5)Don't drop, bend or twist LCM.
(6)Soldering: only to the I/O terminals.
(7)Storage: please storage in anti-static electricity container and clean environment.
(8). Winstar have the right to change the passive components
(9). Winstar have the right to change the PCB Rev.

3.General Specification

Item	Dimension	Unit
Number of Characters	20 characters x 4 Lines	—
Module dimension	146.0 x 62.5 x 13.6(MAX)	mm
View area	123.5 x 43.0	mm
Active area	118.84x 38.47	mm
Dot size	0.92 x 1.1	mm
Dot pitch	0.98 x 1.16	mm
Character size	4.84 x 9.22	mm
Character pitch	6.0 x 9.75	mm
LCD type	STN Negative, Blue Transmissive, (In LCD production, It will occur slightly color difference. We can only guarantee the same color in the same batch.)	
Duty	1/16	
View direction	6 o'clock	
Backlight Type	LED White	

4.Absolute Maximum Ratings

Item	Symbol	Min	Typ	Max	Unit
Operating Temperature	T_{OP}	-20	—	+70	℃
Storage Temperature	T_{ST}	-30	—	+80	℃
Input Voltage	V_I	V_{SS}	—	V_{DD}	V
Supply Voltage For Logic	V_{DD}-V_{SS}	-0.3	—	7	V
Supply Voltage For LCD	V_{DD}-V_0	-0.3	—	13	V

5.Electrical Characteristics

Item	Symbol	Condition	Min	Typ	Max	Unit
Supply Voltage For Logic	V_{DD}-V_{SS}	—	4.5	5.0	5.5	V
Supply Voltage For LCD *Note	V_{DD}-V_0	Ta=-20℃ Ta=25℃ Ta=70℃	— — 3.5	— 4.2 —	5.4 — —	V V V
Input High Volt.	V_{IH}	—	0.7 V_{DD}	—	V_{DD}	V
Input Low Volt.	V_{IL}	—	V_{SS}	—	0.6	V
Output High Volt.	V_{OH}	—	3.9	—	—	V
Output Low Volt.	V_{OL}	—	—	—	0.4	V
Supply Current	I_{DD}	V_{DD}=5.0V	1.0	1.2	1.5	mA

* Note: Please design the VOP adjustment circuit on customer's main board

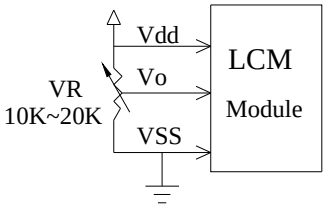

6.Optical Characteristics

Item	Symbol	Condition	Min	Typ	Max	Unit
View Angle	(V) θ	CR≧2	20	—	40	deg
	(H) φ	CR≧2	-30	—	30	deg
Contrast Ratio	CR	—	—	3	—	—
Response Time	T rise	—	—	150	200	ms
	T fall	—	—	150	200	ms

Definition of Operation Voltage (Vop)

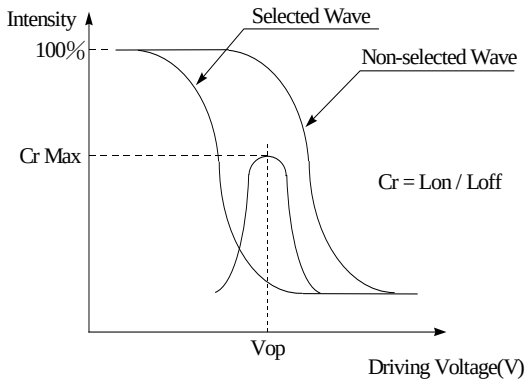

[positive type]

Definition of Response Time (Tr , Tf)

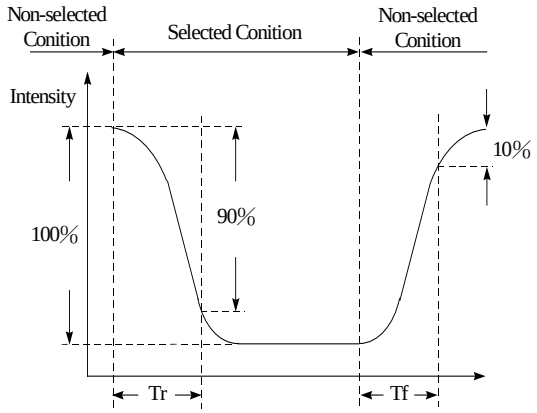

[positive type]

Conditions :

Operating Voltage : Vop　　Viewing Angle(θ ， φ) : 0°， 0°

Frame Frequency : 64 HZ　　Driving Waveform : 1/N duty , 1/a bias

Definition of viewing angle(CR≧2)

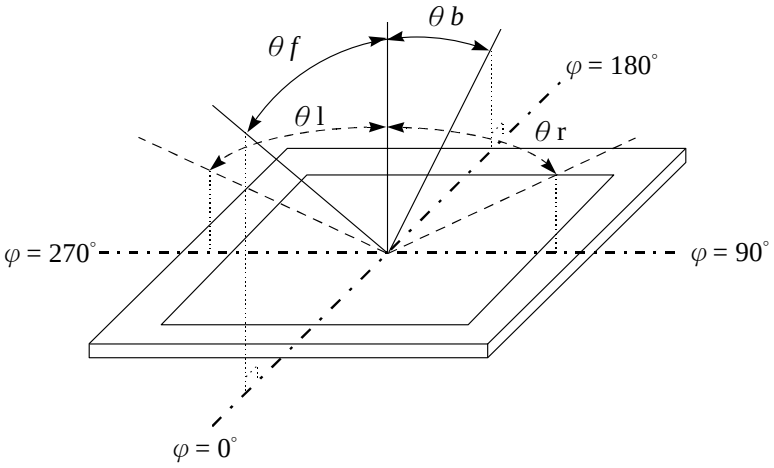

7.Interface Pin Function

Pin No.	Symbol	Level	Description
1	V_{SS}	0V	Ground
2	V_{DD}	5.0V	Supply Voltage for logic
3	VO	(Variable)	Operating voltage for LCD
4	RS	H/L	H: DATA, L: Instruction code
5	R/W	H/L	H: Read(MPU→Module) L: Write(MPU→Module)
6	E	H,H→L	Chip enable signal
7	DB0	H/L	Data bus line
8	DB1	H/L	Data bus line
9	DB2	H/L	Data bus line
10	DB3	H/L	Data bus line
11	DB4	H/L	Data bus line
12	DB5	H/L	Data bus line
13	DB6	H/L	Data bus line
14	DB7	H/L	Data bus line
15	A	—	LED +
16	K	—	LED -
17	NC	—	No connection
18	NC	—	No connection

8.Contour Drawing &Block Diagram

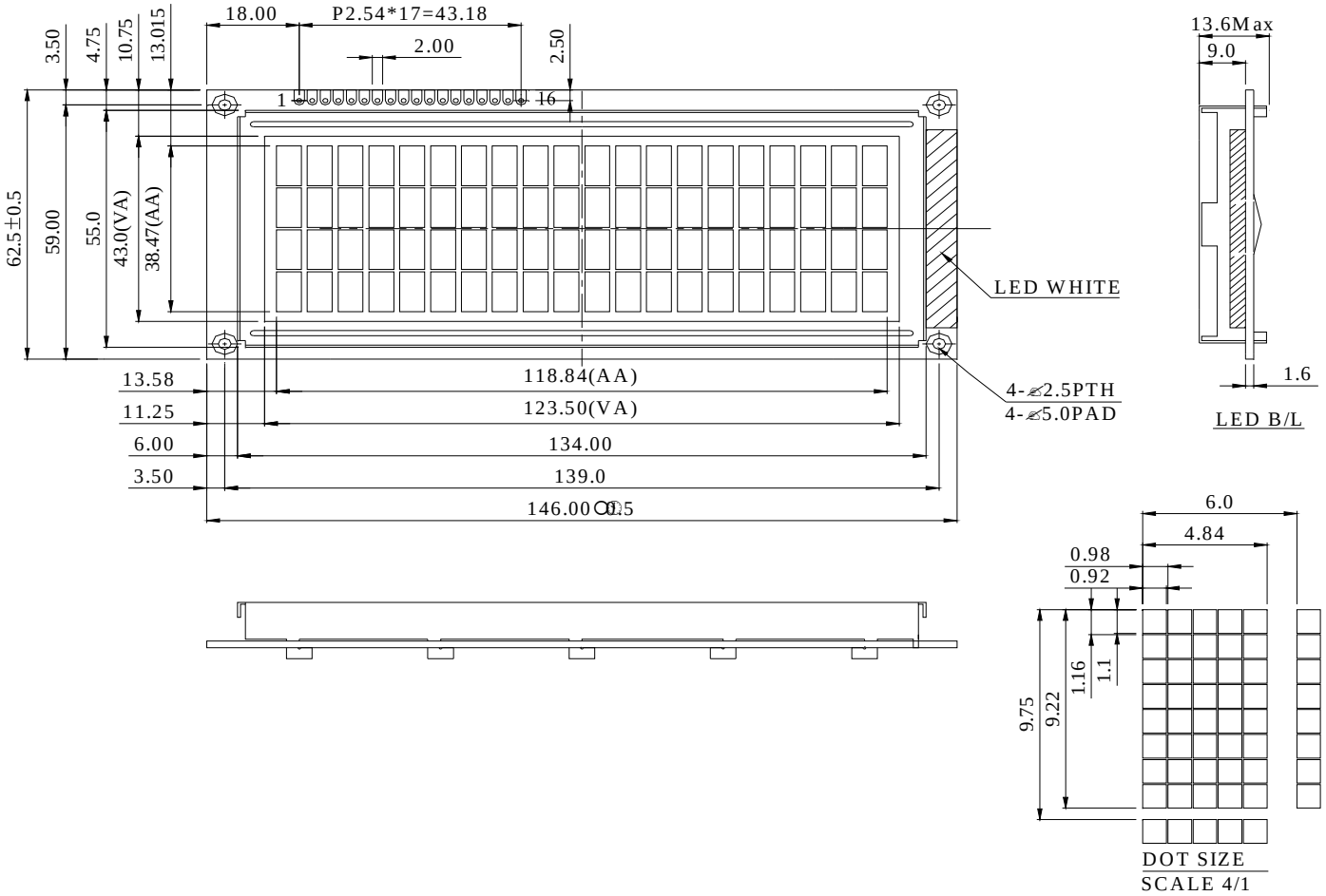

PIN NO.	SYMBOL
1	Vss
2	Vdd
3	Vo
4	RS
5	R/$\overline{W}$
6	E
7	DB0
8	DB1
9	DB2
10	DB3
11	DB4
12	DB5
13	DB6
14	DB7
15	A
16	K
17	NC
18	NC

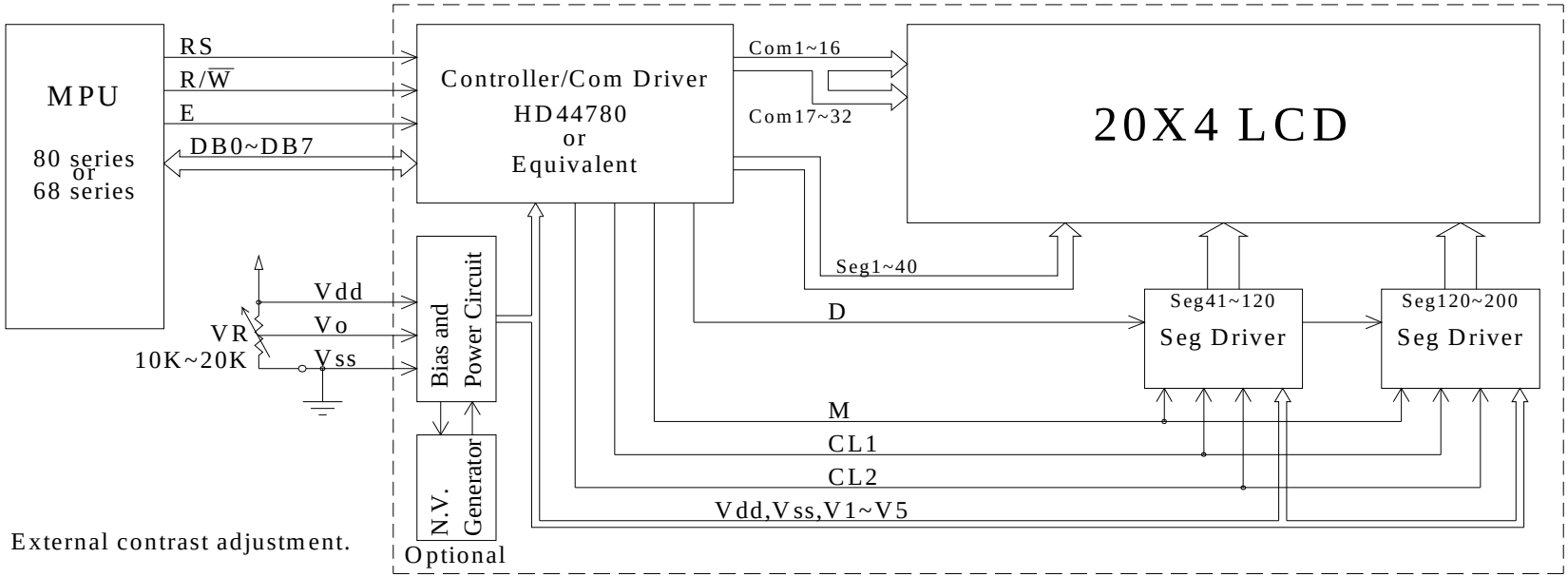

Character located	1	2	3	4	5	6	7	8	9	10	11	12	13	14	15	16	17	18	19	20
DDRAM address	00	01	02	03	04	05	06	07	08	09	0A	0B	0C	0D	0E	0F	10	11	12	13
DDRAM address	40	41	42	43	44	45	46	47	48	49	4A	4B	4C	4D	4E	4F	50	51	52	53
DDRAM address	14	15	16	17	18	19	1A	1B	1C	1D	1E	1F	20	21	22	23	24	25	26	27
DDRAM address	54	55	56	57	58	59	5A	5B	5C	5D	5E	5F	60	61	62	63	64	65	66	67

9.Function Description

The LCD display Module is built in a LSI controller, the controller has two 8-bit registers, an instruction register (IR) and a data register (DR).
The IR stores instruction codes, such as display clear and cursor shift, and address information for display data RAM (DDRAM) and character generator (CGRAM). The IR can only be written from the MPU. The DR temporarily stores data to be written or read from DDRAM or CGRAM. When address information is written into the IR, then data is stored into the DR from DDRAM or CGRAM. By the register selector (RS) signal, these two registers can be selected.

RS	R/W	Operation
0	0	IR write as an internal operation (display clear, etc.)
0	1	Read busy flag (DB7) and address counter (DB0 to DB7)
1	0	Write data to DDRAM or CGRAM (DR to DDRAM or CGRAM)
1	1	Read data from DDRAM or CGRAM (DDRAM or CGRAM to DR)

Busy Flag (BF)
When the busy flag is 1, the controller LSI is in the internal operation mode, and the next instruction will not be accepted. When RS=0 and R/W=1, the busy flag is output to DB7. The next instruction must be written after ensuring that the busy flag is 0.

Address Counter (AC)
The address counter (AC) assigns addresses to both DDRAM and CGRAM

Display Data RAM (DDRAM)
This DDRAM is used to store the display data represented in 8-bit character codes. Its extended capacity is 80×8 bits or 80 characters. Below figure is the relationships between DDRAM addresses and positions on the liquid crystal display.

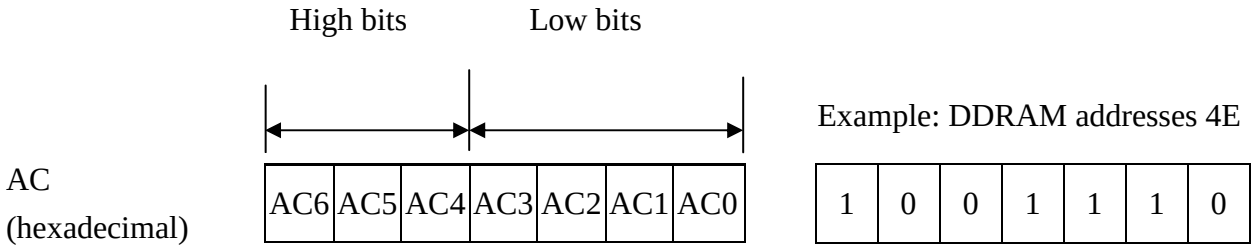

Display position DDRAM address

1	2	3	4	5	6	7	8	9	10	11	12	13	14	15	16	17	18	19	20
00	01	02	03	04	05	06	07	08	09	0A	0B	0C	0D	0E	0F	10	11	12	13
40	41	42	43	44	45	46	47	48	49	4A	4B	4C	4D	4E	4F	50	51	52	53
14	15	16	17	18	19	1A	1B	1C	1D	1E	1F	20	21	22	23	24	25	26	27
54	55	56	57	58	59	5A	5B	5C	5D	5E	5F	60	61	62	63	64	65	66	67

Character Generator ROM (CGROM)

The CGROM generate 5×8 dot or 5×10 dot character patterns from 8-bit character codes. See Table 2.

Character Generator RAM (CGRAM)

In CGRAM, the user can rewrite character by program. For 5×8 dots, eight character patterns can be written, and for 5×10 dots, four character patterns can be written.

Write into DDRAM the character code at the addresses shown as the left column of table 1. To show the character patterns stored in CGRAM.

Relationship between CGRAM Addresses, Character Codes (DDRAM) and Character patterns

Table 1.

For 5 * 8 dot character patterns

Character Codes (DDRAM data)	CGRAM Address		Character Patterns (CGRAM data)		
7 6 5 4 3 2 1 0	5 4 3 2 1 0		7 6 5 4 3 2 1 0		
High Low	High Low		High Low		
0 0 0 0 * 0 0 0	0 0 0	0 0 0	* * * ■ ■ ■ ■ ■ 0	Character pattern(1)	
		0 0 1	* * * ■ 0 0 0 ■		
		0 1 0	* * * ■ 0 0 0 ■		
		0 1 1	* * * ■ ■ ■ ■ ■ 0		
		1 0 0	* * * ■ 0 ■ 0 0		
		1 0 1	* * * ■ 0 0 ■ 0		
		1 1 0	* * * ■ 0 0 0 ■		
		1 1 1	* * * 0 0 0 0 0	Cursor pattern	
0 0 0 0 * 0 0 1	0 0 1	0 0 0	* * * ■ 0 0 0 ■	Character pattern(2)	
		0 0 1	* * * 0 ■ 0 ■ 0		
		0 1 0	* * * ■ ■ ■ ■ ■		
		0 1 1	* * * 0 0 ■ 0 0		
		1 0 0	* * * ■ ■ ■ ■ ■		
		1 0 1	* * * 0 0 ■ 0 0		
		1 1 0	* * * 0 0 ■ 0 0		
		1 1 1	* * * 0 0 0 0 0	Cursor pattern	
		0 0 0	* * *		
		0 0 1			
0 0 0 0 * 1 1 1	1 1 1	1 0 0			
		1 0 1			
		1 1 0			
		1 1 1	* * *		

For 5 * 10 dot character patterns

Character Codes (DDRAM data)	CGRAM Address			Character Patterns (CGRAM data)		
7 6 5 4 3 2 1 0	5 4 3 2 1 0			7 6 5 4 3 2 1 0		
High Low	High Low			High Low		
0 0 0 0 * 0 0 0	0 0	0 0 0 0		* * * 0 0 0 0 0	Character pattern	
		0 0 0 1		* * * 0 0 0 0 0		
		0 0 1 0		* * * ■ 0 ■ ■ 0		
		0 0 1 1		* * * ■ ■ 0 0 ■		
		0 1 0 0		* * * ■ 0 0 0 ■		
		0 1 0 1		* * * ■ 0 0 0 ■		
		0 1 1 0		* * * ■ ■ ■ ■ 0		
		0 1 1 1		* * * ■ 0 0 0 0		
		1 0 0 0		* * * ■ 0 0 0 0		
		1 0 0 1		* * * ■ 0 0 0 0		
		1 0 1 0		* * * 0 0 0 0 0	Cursor pattern	
		1 1 1 1		* * * * * * * *		

■ : " High "

10.Character Generator ROM Pattern

Table.2

Upper 4 bit / Lower 4 bit	LLLL	LLLH	LLHL	LLHH	LHLL	LHLH	LHHL	LHHH	HLLL	HLLH	HLHL	HLHH	HHLL	HHLH	HHHL	HHHH
LLLL	CG RAM (1)															
LLLH	CG RAM (2)															
LLHL	CG RAM (3)															
LLHH	CG RAM (4)															
LHLL	CG RAM (5)															
LHLH	CG RAM (6)															
LHHL	CG RAM (7)															
LHHH	CG RAM (8)															
HLLL	CG RAM (1)															
HLLH	CG RAM (2)															
HLHL	CG RAM (3)															
HLHH	CG RAM (4)															
HHLL	CG RAM (5)															
HHLH	CG RAM (6)															
HHHL	CG RAM (7)															
HHHH	CG RAM (8)															

11.Instruction Table

Instruction	Instruction Code										Description	Execution time (fosc=270Khz)
	RS	R/W	DB7	DB6	DB5	DB4	DB3	DB2	DB1	DB0		
Clear Display	0	0	0	0	0	0	0	0	0	1	Write “00H” to DDRAM and set DDRAM address to “00H” from AC	1.53ms
Return Home	0	0	0	0	0	0	0	0	1	—	Set DDRAM address to “00H” from AC and return cursor to its original position if shifted. The contents of DDRAM are not changed.	1.53ms
Entry Mode Set	0	0	0	0	0	0	0	1	I/D	SH	Assign cursor moving direction and enable the shift of entire display.	39 μs
Display ON/OFF Control	0	0	0	0	0	0	1	D	C	B	Set display (D), cursor (C), and blinking of cursor (B) on/off control bit.	39 μs
Cursor or Display Shift	0	0	0	0	0	1	S/C	R/L	—	—	Set cursor moving and display shift control bit, and the direction, without changing of DDRAM data.	39 μs
Function Set	0	0	0	0	1	DL	N	F	—	—	Set interface data length (DL:8-bit/4-bit), numbers of display line (N:2-line/1-line)and, display font type (F:5×11 dots/5×8 dots)	39 μs
Set CGRAM Address	0	0	0	1	AC5	AC4	AC3	AC2	AC1	AC0	Set CGRAM address in address counter.	39 μs
Set DDRAM Address	0	0	1	AC6	AC5	AC4	AC3	AC2	AC1	AC0	Set DDRAM address in address counter.	39 μs
Read Busy Flag and Address	0	1	BF	AC6	AC5	AC4	AC3	AC2	AC1	AC0	Whether during internal operation or not can be known by reading BF. The contents of address counter can also be read.	0 μs
Write Data to RAM	1	0	D7	D6	D5	D4	D3	D2	D1	D0	Write data into internal RAM (DDRAM/CGRAM).	43 μs
Read Data from RAM	1	1	D7	D6	D5	D4	D3	D2	D1	D0	Read data from internal RAM (DDRAM/CGRAM).	43 μs

＊ ”—”：don’t care

12.Timing Characteristics

12.1 Write Operation

- Writing data from MPU

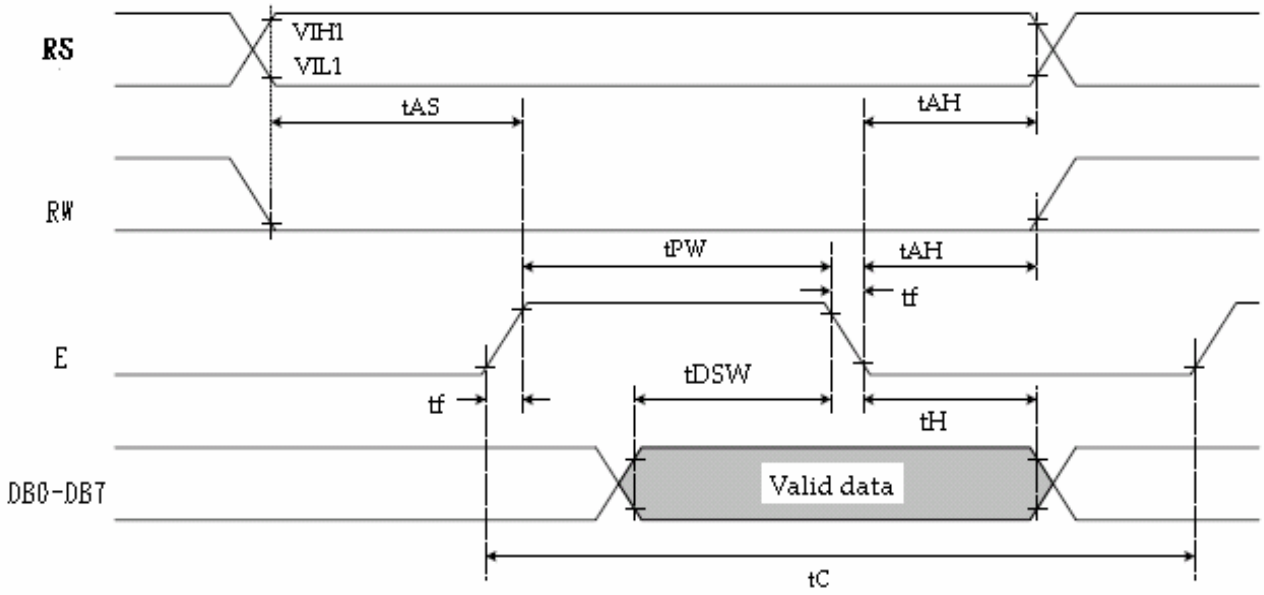

Ta=25℃, VDD=5.0V

Item	Symbol	Min	Typ	Max	Unit
Enable cycle time	T_C	1200	—	—	ns
Enable pulse width	T_{PW}	140	—	—	ns
Enable rise/fall time	T_R,T_F	—	—	25	ns
Address set-up time (RS, R/W to E)	t_{AS}	0	—	—	ns
Address hold time	t_{AH}	10	—	—	ns
Data set-up time	t_{DSW}	40	—	—	ns
Data hold time	t_H	10	—	—	ns

12.2 Read Operation

- Reading data from ST7066U

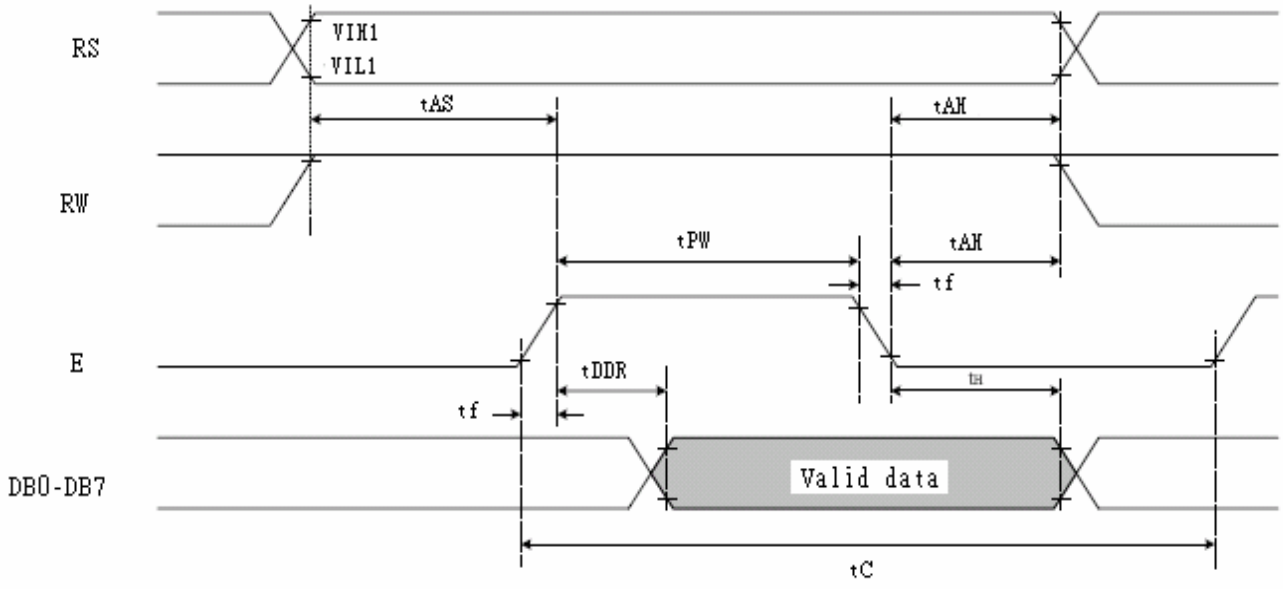

Ta=25℃, VDD=5V

Item	Symbol	Min	Typ	Max	Unit
Enable cycle time	T_C	1200	—	—	ns
Enable pulse width (high level)	T_{PW}	140	—	—	ns
Enable rise/fall time	T_R,T_F	—	—	25	ns
Address set-up time (RS, R/W to E)	t_{AS}	0	—	—	ns
Address hold time	t_{AH}	10	—	—	ns
Data delay time	t_{DDR}	—	—	100	ns
Data hold time	t_H	10	—	—	ns

13.Initializing of LCM

Power on

Wait for more than 40 ms after V_{DD} rises to 4.5 V

BF can not be checked before this instruction.

RS	R/$\overline{W}$	DB7	DB6	DB5	DB4	DB3	DB2	DB1	DB0
0	0	0	0	1	1	*	*	*	*

Function set

Wait for more than 39us

BF can not be checked before this instruction.

RS	R/$\overline{W}$	DB7	DB6	DB5	DB4	DB3	DB2	DB1	DB0
0	0	0	0	1	0	*	*	*	*
0	0	N	F	*	*	*	*	*	*

Function set

Wait for more than 39 μs

BF can not be checked before this instruction.

RS	R/$\overline{W}$	DB7	DB6	DB5	DB4	DB3	DB2	DB1	DB0
0	0	0	0	1	0	*	*	*	*
0	0	N	F	*	*	*	*	*	*

Function set

Wait for more than 37us

RS	R/$\overline{W}$	DB7	DB6	DB5	DB4	DB3	DB2	DB1	DB0
0	0	0	0	0	0	*	*	*	*
0	0	1	D	C	B	*	*	*	*

Display ON/OFF control

Wait for more than 37 μs

RS	R/$\overline{W}$	DB7	DB6	DB5	DB4	DB3	DB2	DB1	DB0
0	0	0	0	0	0	*	*	*	*
0	0	0	0	0	1	*	*	*	*

Display Clear

Wait for more than 1.53ms

RS	R/$\overline{W}$	DB7	DB6	DB5	DB4	DB3	DB2	DB1	DB0
0	0	0	0	0	0	*	*	*	*
0	0	0	1	I/D	SH	*	*	*	*

Entry Mode Set

Initialization ends

4-Bit Ineterface

Power on

Wait for more than 40 ms after V_{DD} rises to 4.5 V

BF can not be checked before this instruction.

RS	R/$\overline{W}$	DB7	DB6	DB5	DB4	DB3	DB2	DB1	DB0	
0	0	0	0	1	1	N	F	*	*	Function set

Wait for more than 39us

BF can not be checked before this instruction.

RS	R/$\overline{W}$	DB7	DB6	DB5	DB4	DB3	DB2	DB1	DB0	
0	0	0	0	1	1	N	F	*	*	Function set

Wait for more than 37us

RS	R/$\overline{W}$	DB7	DB6	DB5	DB4	DB3	DB2	DB1	DB0	
0	0	0	0	0	0	1	B	C	D	Display ON/OFF control

Wait for more than 37 μs

RS	R/$\overline{W}$	DB7	DB6	DB5	DB4	DB3	DB2	DB1	DB0	
0	0	0	0	0	0	0	0	0	1	Display Clear

Wait for more than 1.53ms

RS	R/$\overline{W}$	DB7	DB6	DB5	DB4	DB3	DB2	DB1	DB0	
0	0	0	0	0	0	0	1	I/D	S	Entry Mode Set

Initialization ends

8-Bit Ineterface

14.Reliability

Content of Reliability Test (wide temperature, -20℃~70℃)

Environmental Test			
Test Item	**Content of Test**	**Test Condition**	**Note**
High Temperature storage	Endurance test applying the high storage temperature for a long time.	80℃ 200hrs	2
Low Temperature storage	Endurance test applying the high storage temperature for a long time.	-30℃ 200hrs	1,2
High Temperature Operation	Endurance test applying the electric stress (Voltage & Current) and the thermal stress to the element for a long time.	70℃ 200hrs	——
Low Temperature Operation	Endurance test applying the electric stress under low temperature for a long time.	-20℃ 200hrs	1
High Temperature/ Humidity Operation	The module should be allowed to stand at 60 ℃,90%RH max For 96hrs under no-load condition excluding the polarizer, Then taking it out and drying it at normal temperature.	60℃,90%RH 96hrs	1,2
Thermal shock resistance	The sample should be allowed stand the following 10 cycles of operation -20℃ 25℃ 70℃ 30min 5min 30min 1 cycle	-20℃/70℃ 10 cycles	——
Vibration test	Endurance test applying the vibration during transportation and using.	Total fixed amplitude : 1.5mm Vibration Frequency : 10~55Hz One cycle 60 seconds to 3 directions of X,Y,Z for Each 15 minutes	3
Static electricity test	Endurance test applying the electric stress to the terminal.	VS=800V,RS=1.5kΩ CS=100pF 1 time	——

Note1: No dew condensation to be observed.

Note2: The function test shall be conducted after 4 hours storage at the normal Temperature and humidity after remove from the test chamber.

Note3: Vibration test will be conducted to the product itself without putting it in a container.

15.Backlight Information

Specification

PARAMETER	SYMBOL	MIN	TYP	MAX	UNIT	TEST CONDITION
Supply Current	ILED	72	80	125	mA	V=3.5V
Supply Voltage	V	3.4	3.5	3.6	V	—
Reverse Voltage	VR	—	—	5	V	—
Luminous Intensity	IV	232	290	—	CD/M^2	ILED=80mA
Wave Length	λp	—		—	nm	ILED=80mA
LED Life Time (For Reference only)	—	—	50K	—	Hr.	ILED=80mA 25℃,50-60%RH, (Note 1)
Color	White					

Note: The LED of B/L is drive by current only, drive voltage is for reference only. drive voltage can make driving current under safety area (current between minimum and maximum).

Note 1:50K hours is only an estimate for reference.

2.Drive from pin15,pin16

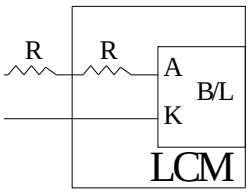

16. Inspection specification

<table>
<tr><th>NO</th><th>Item</th><th>Criterion</th><th>AQL</th></tr>
<tr><td>01</td><td>Electrical Testing</td><td>1.1 Missing vertical, horizontal segment, segment contrast defect.
1.2 Missing character , dot or icon.
1.3 Display malfunction.
1.4 No function or no display.
1.5 Current consumption exceeds product specifications.
1.6 LCD viewing angle defect.
1.7 Mixed product types.
1.8 Contrast defect.</td><td>0.65</td></tr>
<tr><td>02</td><td>Black or white spots on LCD (display only)</td><td>2.1 White and black spots on display ≦0.25mm, no more than three white or black spots present.
2.2 Densely spaced: No more than two spots or lines within 3mm</td><td>2.5</td></tr>
<tr><td rowspan="2">03</td><td rowspan="2">LCD black spots, white spots, contamination (non-display)</td><td>3.1 Round type : As following drawing
Φ=(x + y) / 2
 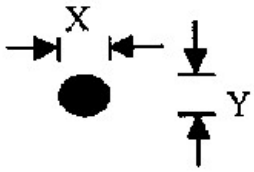

<table>
<tr><th>SIZE</th><th>Acceptable Q TY</th></tr>
<tr><td>Φ ≦0.10</td><td>Accept no dense</td></tr>
<tr><td>0.10＜ Φ ≦0.20</td><td>2</td></tr>
<tr><td>0.20＜ Φ ≦0.25</td><td>1</td></tr>
<tr><td>0.25＜Φ</td><td>0</td></tr>
</table></td><td>2.5</td></tr>
<tr><td>3.2 Line type : (As following drawing)
 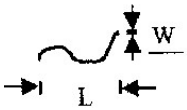

<table>
<tr><th>Length</th><th>Width</th><th>Acceptable Q TY</th></tr>
<tr><td>---</td><td>W≦0.02</td><td>Accept no dense</td></tr>
<tr><td>L≦3.0</td><td>0.02＜W≦0.03</td><td rowspan="2">2</td></tr>
<tr><td>L≦2.5</td><td>0.03＜W≦0.05</td></tr>
<tr><td>---</td><td>0.05＜W</td><td>As round type</td></tr>
</table></td><td>2.5</td></tr>
<tr><td>04</td><td>Polarizer bubbles</td><td>If bubbles are visible, judge using black spot specifications, not easy to find, must check in specify direction.
<table>
<tr><th>Size Φ</th><th>Acceptable Q TY</th></tr>
<tr><td>Φ ≦0.20</td><td>Accept no dense</td></tr>
<tr><td>0.20＜Φ ≦0.50</td><td>3</td></tr>
<tr><td>0.50＜Φ ≦1.00</td><td>2</td></tr>
<tr><td>1.00＜Φ</td><td>0</td></tr>
<tr><td>Total Q TY</td><td>3</td></tr>
</table></td><td>2.5</td></tr>
</table>

<table>
<tr><th>NO</th><th>Item</th><th>Criterion</th><th>AQL</th></tr>
<tr><td>05</td><td>Scratches</td><td>Follow NO.3 LCD black spots, white spots, contamination</td><td></td></tr>
<tr><td>06</td><td>Chipped glass</td><td>
Symbols Define:
x: Chip length y: Chip width z: Chip thickness
k: Seal width t: Glass thickness a: LCD side length
L: Electrode pad length:

6.1 General glass chip :
6.1.1 Chip on panel surface and crack between panels:
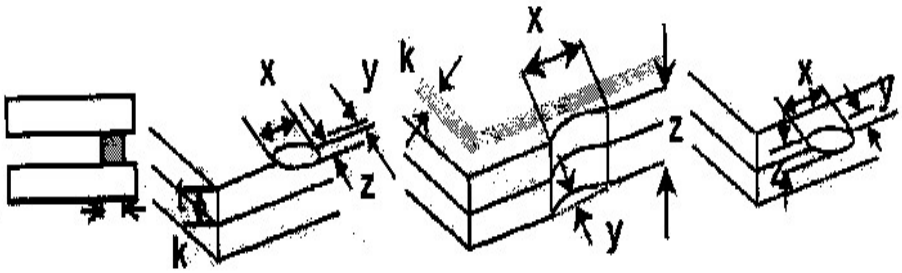

<table>
<tr><td>z: Chip thickness</td><td>y: Chip width</td><td>x: Chip length</td></tr>
<tr><td>Z≦1/2t</td><td>Not over viewing area</td><td>x≦1/8a</td></tr>
<tr><td>1/2t＜z≦2t</td><td>Not exceed 1/3k</td><td>x≦1/8a</td></tr>
</table>
⊙If there are 2 or more chips, x is total length of each chip.

6.1.2 Corner crack:
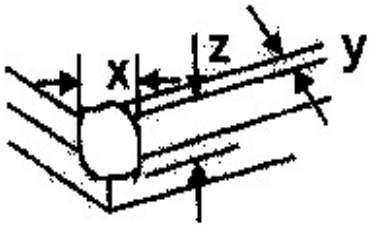

<table>
<tr><td>z: Chip thickness</td><td>y: Chip width</td><td>x: Chip length</td></tr>
<tr><td>Z≦1/2t</td><td>Not over viewing area</td><td>x≦1/8a</td></tr>
<tr><td>1/2t＜z≦2t</td><td>Not exceed 1/3k</td><td>x≦1/8a</td></tr>
</table>
⊙If there are 2 or more chips, x is the total length of each chip.
</td><td>2.5</td></tr>
</table>

<table>
<tr><th>NO</th><th>Item</th><th>Criterion</th><th>AQL</th></tr>
<tr><td>06</td><td>Glass crack</td><td>
Symbols :
x: Chip length y: Chip width z: Chip thickness
k: Seal width t: Glass thickness a: LCD side length
L: Electrode pad length
6.2 Protrusion over terminal :
6.2.1 Chip on electrode pad :
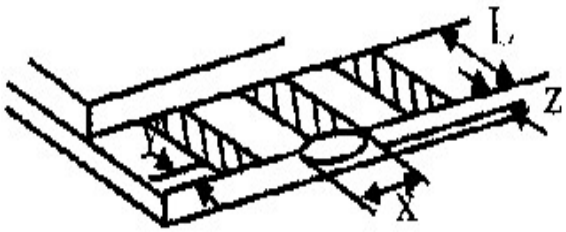

<table>
<tr><td>y: Chip width</td><td>x: Chip length</td><td>z: Chip thickness</td></tr>
<tr><td>y≦0.5mm</td><td>x≦1/8a</td><td>0 ＜ z ≦ t</td></tr>
</table>
6.2.2 Non-conductive portion:
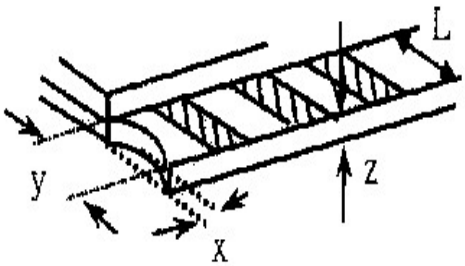

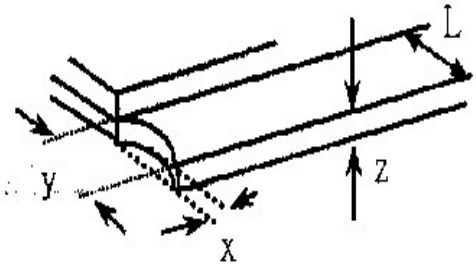

<table>
<tr><td>y: Chip width</td><td>x: Chip length</td><td>z: Chip thickness</td></tr>
<tr><td>y≦ L</td><td>x≦1/8a</td><td>0 ＜ z ≦ t</td></tr>
</table>
⊙If the chipped area touches the ITO terminal, over 2/3 of the ITO must remain and be inspected according to electrode terminal specifications.
⊙If the product will be heat sealed by the customer, the alignment mark not be damaged.
6.2.3 Substrate protuberance and internal crack.
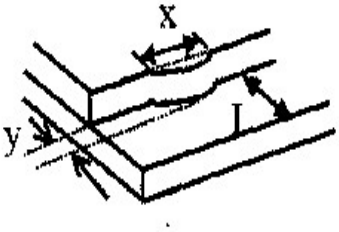

<table>
<tr><td>y: width</td><td>x: length</td></tr>
<tr><td>y≦1/3L</td><td>x ≦ a</td></tr>
</table>
</td><td>2.5</td></tr>
</table>

NO	Item	Criterion	AQL
07	Cracked glass	The LCD with extensive crack is not acceptable.	2.5
08	Backlight elements	8.1 Illumination source flickers when lit. 8.2 Spots or scratched that appear when lit must be judged. Using LCD spot, lines and contamination standards. 8.3 Backlight doesn’ t light or color wrong.	0.65 2.5 0.65
09	Bezel	9.1 Bezel may not have rust, be deformed or have fingerprints, stains or other contamination. 9.2 Bezel must comply with job specifications.	2.5 0.65
10	PCB、COB	10.1 COB seal may not have pinholes larger than 0.2mm or contamination. 10.2 COB seal surface may not have pinholes through to the IC. 10.3 The height of the COB should not exceed the height indicated in the assembly diagram. 10.4 There may not be more than 2mm of sealant outside the seal area on the PCB. And there should be no more than three places. 10.5 No oxidation or contamination PCB terminals. 10.6 Parts on PCB must be the same as on the production characteristic chart. There should be no wrong parts, missing parts or excess parts. 10.7 The jumper on the PCB should conform to the product characteristic chart. 10.8 If solder gets on bezel tab pads, LED pad, zebra pad or screw hold pad, make sure it is smoothed down. 10.9 The Scraping testing standard for Copper Coating of PCB 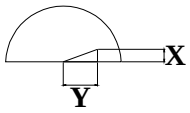 **X * Y<=2mm^2**	2.5 2.5 0.65 2.5 2.5 0.65 0.65 2.5 2.5
11	Soldering	11.1 No un-melted solder paste may be present on the PCB. 11.2 No cold solder joints, missing solder connections, oxidation or icicle. 11.3 No residue or solder balls on PCB. 11.4 No short circuits in components on PCB.	2.5 2.5 2.5 0.65

NO	Item	Criterion	AQL
12	General appearance	12.1 No oxidation, contamination, curves or, bends on interface Pin (OLB) of TCP. 12.2 No cracks on interface pin (OLB) of TCP. 12.3 No contamination, solder residue or solder balls on product. 12.4 The IC on the TCP may not be damaged, circuits. 12.5 The uppermost edge of the protective strip on the interface pin must be present or look as if it cause the interface pin to sever. 12.6 The residual rosin or tin oil of soldering (component or chip component) is not burned into brown or black color. 12.7 Sealant on top of the ITO circuit has not hardened. 12.8 Pin type must match type in specification sheet. 12.9 LCD pin loose or missing pins. 12.10 Product packaging must the same as specified on packaging specification sheet. 12.11 Product dimension and structure must conform to product specification sheet.	2.5 0.65 2.5 2.5 2.5 2.5 2.5 0.65 0.65 0.65 0.65

17. Material List of Components for RoHs

1. WINSTAR Display Co., Ltd hereby declares that all of or part of products (with the mark "#"in code), including, but not limited to, the LCM, accessories or packages, manufactured and/or delivered to your company (including your subsidiaries and affiliated company) directly or indirectly by our company (including our subsidiaries or affiliated companies) do not intentionally contain any of the substances listed in all applicable EU directives and regulations, including the following substances.

Exhibit A：The Harmful Material List

Material	(Cd)	(Pb)	(Hg)	(Cr6+)	PBBs	PBDEs
Limited Value	100 ppm	1000 ppm	1000 ppm	1000 ppm	1000 ppm	1000 ppm
Above limited value is set up according to RoHS.						

2.Process for RoHS requirement：

(1) Use the Sn/Ag/Cu soldering surface；the surface of Pb-free solder is rougher than we used before.

(2) Heat-resistance temp.：

Reflow：250℃,30 seconds Max.；

Connector soldering wave or hand soldering：320℃, 10 seconds max.

(3) Temp. curve of reflow, max. Temp.：235±5℃；

Recommended customer's soldering temp. of connector：280℃, 3 seconds.

LCM Sample Estimate Feedback Sheet

1、Panel Specification：

1. Panel Type： ☐ Pass ☐ NG ,_____
2. View Direction： ☐ Pass ☐ NG ,_____
3. Numbers of Dots： ☐ Pass ☐ NG ,_____
4. View Area： ☐ Pass ☐ NG ,_____
5. Active Area： ☐ Pass ☐ NG ,_____
6. Operating Temperature： ☐ Pass ☐ NG ,_____
7. Storage Temperature： ☐ Pass ☐ NG ,_____
8. Others：_____

2、Mechanical Specification：

1. PCB Size： ☐ Pass ☐ NG ,_____
2. Frame Size： ☐ Pass ☐ NG ,_____
3. Materal of Frame： ☐ Pass ☐ NG ,_____
4. Connector Position： ☐ Pass ☐ NG ,_____
5. Fix Hole Position： ☐ Pass ☐ NG ,_____
6. Backlight Position： ☐ Pass ☐ NG ,_____
7. Thickness of PCB： ☐ Pass ☐ NG ,_____
8. Height of Frame to PCB： ☐ Pass ☐ NG ,_____
9. Height of Module： ☐ Pass ☐ NG ,_____
10. Others： ☐ Pass ☐ NG ,_____

3、Relative Hole Size：

1. Pitch of Connector： ☐ Pass ☐ NG ,_____
2. Hole size of Connector： ☐ Pass ☐ NG ,_____
3. Mounting Hole size： ☐ Pass ☐ NG ,_____
4. Mounting Hole Type： ☐ Pass ☐ NG ,_____
5. Others： ☐ Pass ☐ NG ,_____

4、Backlight Specification：

1. B/L Type： ☐ Pass ☐ NG ,_____
2. B/L Color： ☐ Pass ☐ NG ,_____
3. B/L Driving Voltage (Reference for LED Type)： ☐ Pass ☐ NG ,_____
4. B/L Driving Current： ☐ Pass ☐ NG ,_____
5. Brightness of B/L： ☐ Pass ☐ NG ,_____
6. B/L Solder Method： ☐ Pass ☐ NG ,_____
7. Others： ☐ Pass ☐ NG ,_____

>> **Go to page 2** <<

5、**Electronic Characteristics of Module**：

1. Input Voltage： ☐ Pass ☐ NG ,_____
2. Supply Current： ☐ Pass ☐ NG ,_____
3. Driving Voltage for LCD： ☐ Pass ☐ NG ,_____
4. Contrast for LCD： ☐ Pass ☐ NG ,_____
5. B/L Driving Method： ☐ Pass ☐ NG ,_____
6. Negative Voltage Output： ☐ Pass ☐ NG ,_____
7. Interface Function： ☐ Pass ☐ NG ,_____
8. LCD Uniformity： ☐ Pass ☐ NG ,_____
9. ESD test： ☐ Pass ☐ NG ,_____
10. Others： ☐ Pass ☐ NG ,_____

6、**Summary**：

Sales signature：_____

Customer Signature：_____ **Date：** / /

Mouser Electronics

Authorized Distributor

Click to View Pricing, Inventory, Delivery & Lifecycle Information:

Mikroe:
MIKROE-159