LIQUID CRYSTAL DISPLAY MODULE
MODEL: NMTC-S20200XRGHS-10B
Customer's No.: None.

Acceptance

Microtips Technology Inc.
12F. No.31 Lane 169, Kang Ning St., His-Chih,
Taipei Hsien, Taiwan, R.O.C.
FAX: 886-2-26958625

Approved and Checked by

Approved by	Checked by		Made by
微 端 2017/09/06 連俊傑	微 端 2017/09/06 韋有乾	微 端 2017/09/06 洪振益	微 端 2017/09/06 許瓊窈

Microtips Technology Inc.

Revise Records

Rev.	Date	Contents	Written	Approved
A.	2017/09/06	See Note 1.	Jill Hsu	Danny Lien

Special Notes

Note 1.	The LCD module is compliant with RoHS
Note 2.	
Note 3.	
Note 4.	
Note 5.	

CONTENTS

ITEM	PAGE
FEATURES	4.
GENERAL SPECIFICATION	5.
ABSOLUTE MAXIMUN RATING	5.
ELECTRICAL CHARACTERISTICS	6.
OPTICAL CHARACTERISTICS	6.
MECHANICAL SPECIFICATION	9.
INTERFACE PIN ASSIGNMENT	10.
BLOCK DIAGRAM	11.
POWER SUPPLY DIAGRAM	11.
TIMING CHARACTERISTICS	12.
READ / WRITE TIMING CHART	13.
COMMANDS	14.
COMMANDS DESCRIPTION	15.
DD RAM ADDRESSING	19.
CG RAM MAPPING	21.
CHARACTER FONT TABLE	22.
RELIABILITY TEST	23.
APPEARANCE CHECK	23.
HANDLING PRECAUTIONS	24.
LCD PRODUCT QUALITY STANDARD	25.
WARRANTY	27.
DIMENSIONAL OUTLINES	28.

FEATURES of
LIQUID CRYSTAL DISPLAY MODULE
MODEL NO.: NMTC-S20200XRGHS-10B

The Microtips Customized LCD module, model: NMTC-S20200XRGHS-10B is compliant with RoHS

Character Type Dot Matrix LCD Module
Easy interface of 4 – bit or 8 – bit
Display character pattern: 5 × 7 font with cursor (208 kinds)
The special character pattern can be programmable by Character Generator RAM directly.
A customer character pattern can be programmable by mask option.
Automatically power on reset.
Internal Memory:
- Character Generator ROM (CGROM): 10,080 bits (204 characters × 5 × 8 dot)
- Character Generator RAM (CGRAM): 64 × 8 bits (8 characters × 5 × 8 dot)

Low power operation:
- Power supply voltage range: 2.7 ~ 5.5 V (V_{DD})
- LCD drive voltage range: 3.0 ~ 13.0 V (V_{DD} – Vo)

Low power consumption
CMOS process
Duty – cycle: 1/16

View Direction	☑ 6 O'clock		☐ 12 O'clock		
LCD Type	☐ FSTN Positive		☐ FSTN Negative		
	☑ STN Gray	☐ STN Yellow Green	☐ STN Blue		
Rear Polarizer	☑ Reflective	☐ Transflective	☐ Transmissive		
Backlight Type	☐ LED	☐ Internal Power	☐ EL	☐ 5V input	
		☐ External Power	☐ CCFL	☐ 12V input	
Backlight Color	☐ White	☐ Amber	☐ Blue Green	☐ Yellow Green	☐ Other
Temperature Range	☐ Normal	☑ Wide	☐ Super Wide		
CCFL Inverter	☐ Build – in	☑ Not Build – in			
EL Driver IC	☐ Build – in	☑ Not Build – in			
Touch Screen	☐ With	☑ Without			

TO BE VERY CAREFUL !
The LCD driver ICs are made of CMOS process, which is very easy to be damaged by static charge, make sure the user is grounded when handling the LCM.

GENERAL SPECIFICATION

Item	Content
Display Resolution	20 Characters × 2 lines
Dimensional Outline (mm)	116.0 (W) × 37.0 (H) × 10.0 max (D)
Display mode	Reflective / Positive Type
Circuit	IC, ST 7066
Interface	Data (DB0～DB7), RS, R / W, E

ABSOLUTE MAXIMUN RATING

(1) Electrical Absolute Ratings

Item	Symbol	Min.	Max.	Unit	Note
Power Supply for Logic	$V_{DD} - V_{SS}$	-0.3	7.0	Volt	--
Power Supply for LCD	$V_{DD} - Vo$	0	15.0	Volt	--
Input Voltage	V_{IN}	-0.3	V_{DD}+0.3	Volt	--
Supply Current for LED backlight	I_{LED}	--	420	mA	--

Note: Operator should be grounded during handling LCM.

(2) Environmental Absolute Maximum Ratings

Item	Normal Temperature				Wide Temperature			
	Operating		Storage		Operating		Storage	
	Max,	Min.	Max,	Min.	Max,	Min.	Max,	Min.
Ambient Temperature	0℃	+50℃	-20℃	+70℃	-20℃	+70℃	-30℃	+80℃
Humidity (without condensation)	Note 2, 4		Note 3, 5		Note 4, 5		Note 4, 6	

Note 2: Ta≦50℃: 80% RH max
Ta>50℃: Absolute humidity must be lower than the humidity of 85% RH at 50℃
Note 3: Ta at -20℃ will be < 48hrs at 70℃ will be < 120hrs when humidity is higher than 70%.
Note 4: Background color changes slightly depending on ambient temperature. This phenomenon is reversible.
Note 5: Ta≦70℃: 75RH max
Ta > 70℃: absolute humidity must be lower than the humidity of 75% RH at 70℃
Note 6: Ta at -30℃ will be < 48hrs, at 80℃ will be < 120hrs when humidity is higher than 70%.

ELECTRICAL CHARACTERISTICS

Item	Symbol	Condition	Min.	Typ.	Max.	Unit
Power Supply for Logic	$V_{DD} - V_{SS}$	--	2.7	4.5	5.5	Volt
Input Voltage	V_{IL}	L level	V_{SS}	0.2 V_{DD}	--	Volt
	V_{IH}	H level	0.8 V_{DD}	V_{DD}	--	Volt
LCM Recommend LCD Module Driving Voltage Note 1	V_{DD} = 5.0V $V_{DD} - Vo$ = 4.0V	Ta = 0℃	4.129	4.429	4.729	Volt
		Ta = 25℃	4.0	4.30	4.6	
		Ta = 50℃	3.871	4.171	4.471	
Power Supply Current for LCM	I_{DD} (B/L OFF)	V_{DD} = 5.0V $V_{DD} - Vo$ = 4.0V Ta = 25℃	--	1.5	2.0	mA
	I_{LED}		130	210	315	

OPTICAL CHARACTERISTICS

Item	Symbol	Condition	Min.	Typ	Max.	Unit	note
Viewing Angle Range	Φf (12 o'clock)	When Cr≧2	--	40	--	Degree	Note 2
	Φb (6 o'clock)		--	50	--		
	Φl (9 o'clock)		--	40	--		
	Φr (3 o'clock)		--	40	--		
Rise Time	T_r	$V_{DD} - Vo$ = 4.0V Ta = 25℃	--	65	250	mS	Note 4
Fall Time	T_f		--	165	250		
Contrast	Cr		--	4.5	--	--	Note 3

[Note 1] Definition of Operation Voltage (Vop)

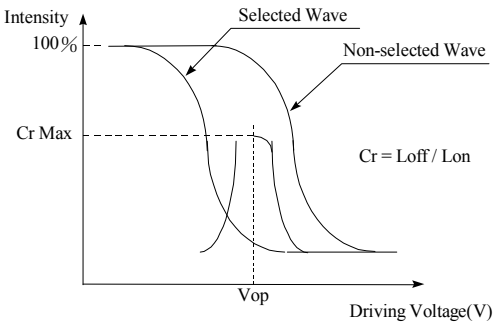

[positive type]

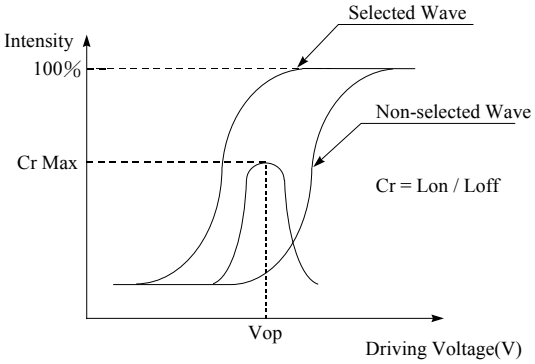

[Negative type]

[Note 2] Definition of Angle θ & ϕ

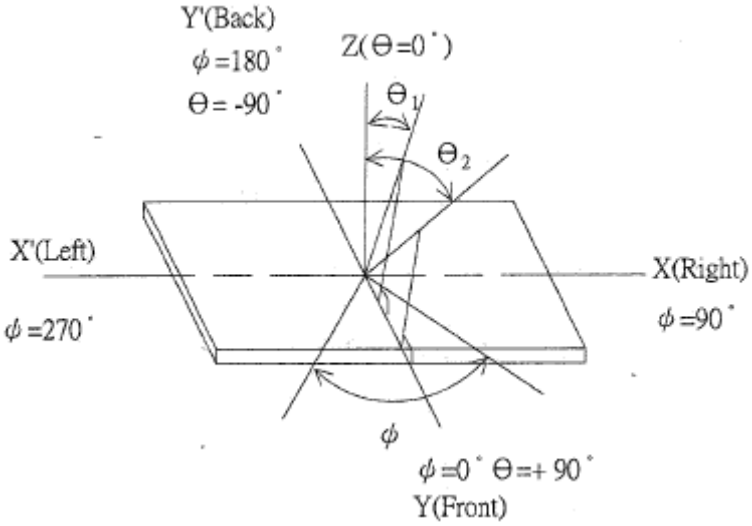

[Note 3] Definition of Viewing Angle θ 1& θ 2

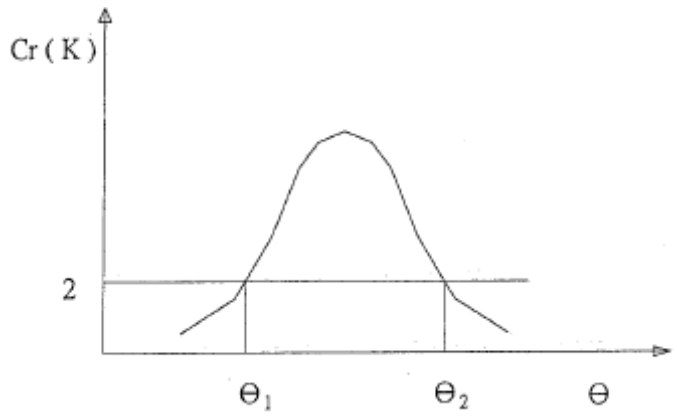

[Note 4] Definition of Response Time (Tr, Tf)

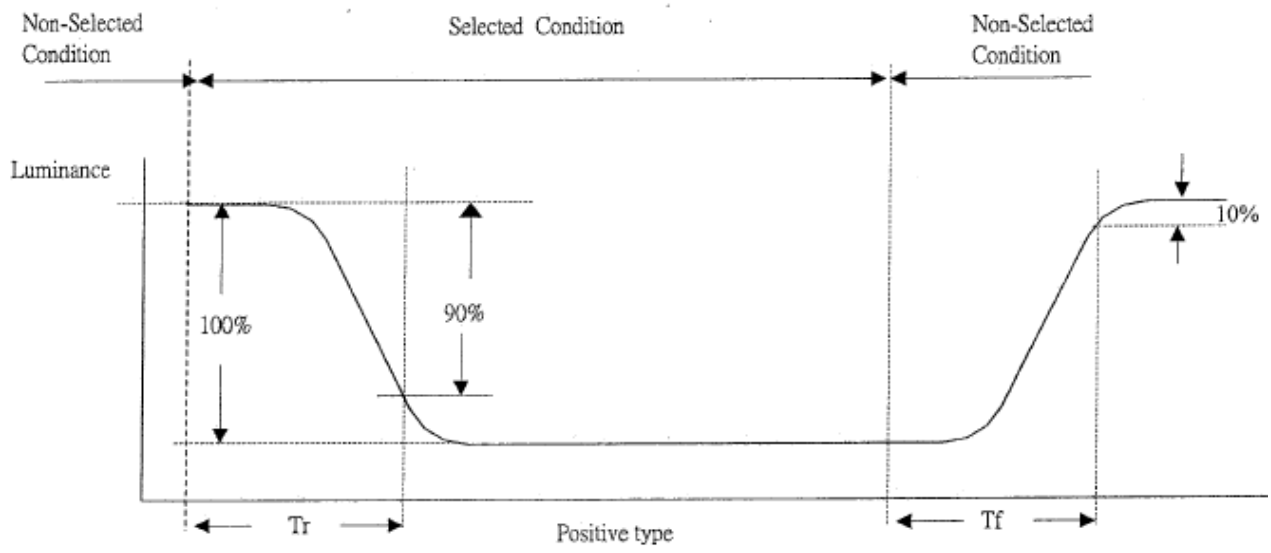

Electro – Optical Characteristics are measured by

MECHANICAL SPECIFICATION

Product No.		NMTC-S20200XRGHS-10B
Module Size		116.0 (W) mm × 37.0 (H) mm × 10.0 (D) mm Max
Display Format		20 characters × 2 lines
Character Size		3.2 mm × 5.55 mm
Character Pitch		3.7 mm × 5.95 mm
Dot Size		0.60 (W) mm × 0.65 (H) mm
Dot Pitch		0.65 (W) mm × 0.70 (H) mm
Duty Ratio		1/16 Duty
Character Font Table		☑English ☐European ☐Other_____
LCD Display Mode	STN	☐Gray Mode ☑Yellow Mode ☐Blue Mode
	FSTN	☐ Black & White (Normally White / Positive Image) ☐ Black & White (Normally White / Negative Image)
	Rear Polarizer	☑ Reflective ☐ Transflective ☐ Transmissive
Viewing Direction		☑ 6 O'clock ☐12 O'clock ☐3 O'clock ☐9 O'clock
Backlight		☑Without ☐CCFL ☐EL ☐LED
Controller		ST 7066
DC/DC Converter		Without
CCFL Inverter		Without
EL Driver		Without

INTERFACE PIN ASSIGNMENT

PIN NO.	PIN OUT	Description
1.	V_{SS}	Ground
2.	V_{DD}	Logic Circuit Power Supply
3.	V_{EE}	Power Supply For LCD Panel, please refer to page 11 for connection.
4.	RS	Data/ Instruction Register Select
5.	R/W	Read/ Write Select
6.	E	Enable Signal
7. | 14.	DB0 | DB7	3 – State I/O Data Bus
15.	BKLA	Power Supply for Backlight. 100V / 400Hz AC for EL, 4.2V or 210 ~ 315 mA DC for LED backlight Don't care if no backlight
16.	BKLK	

JUMPER EXPLANATION

1. JP2 and JP3 are both short: Pin15 is short with pin2 and pin16 is short with pin1. Backlight powered up via V_{DD} (pin2) and V_{SS} (pin1). Customer does not need to supply power to pin15 and pin16.
2. JP2 short and JP3 open: Pin 15 is short with Pin2 and pin16 is NOT short with pin1. Backlight is powered with V_{DD} (same as logic circuit) and customer should keep pin 15 floating or connected to V_{DD}. Customer could control the backlight independently ON or OFF with pin16 L or H.
3. JP2 open and JP3 short: Pin 15 is NOT short with pin 2 and pin16 is short with pin1. Backlight is common V_{SS} with logic and customer should keep pin16 floating or connected to ground (V_{SS}). Customer could control the backlight ON or OFF with pin15 H or L
4. JP2 and JP3 are both open: The backlight is fully independent with the logic, control the backlight via pin15 / pin16 or A/K.
5. J1 short: Bezel and screw holes connected to GND. J1 open: Bezel and screw holes floating
6. Never change the J2 and J3, it may burn off your system.

Note: J1, JP2 and JP3 are #0805 0 ohm resistors on the rear side of the PCB.

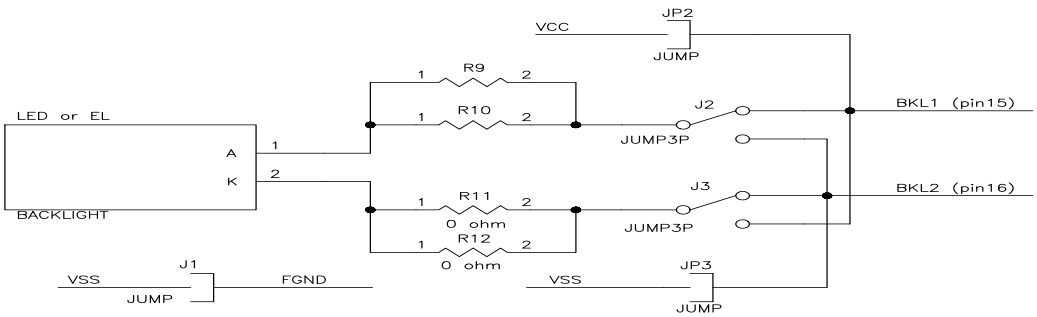

BLOCK DIAGRAM

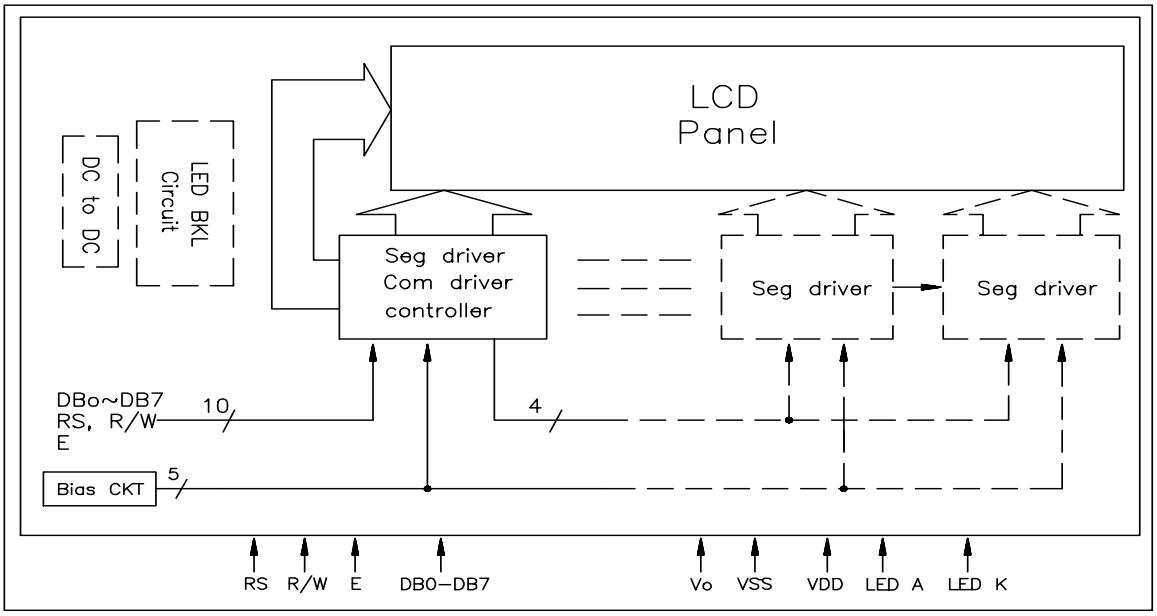

POWER SUPPLY

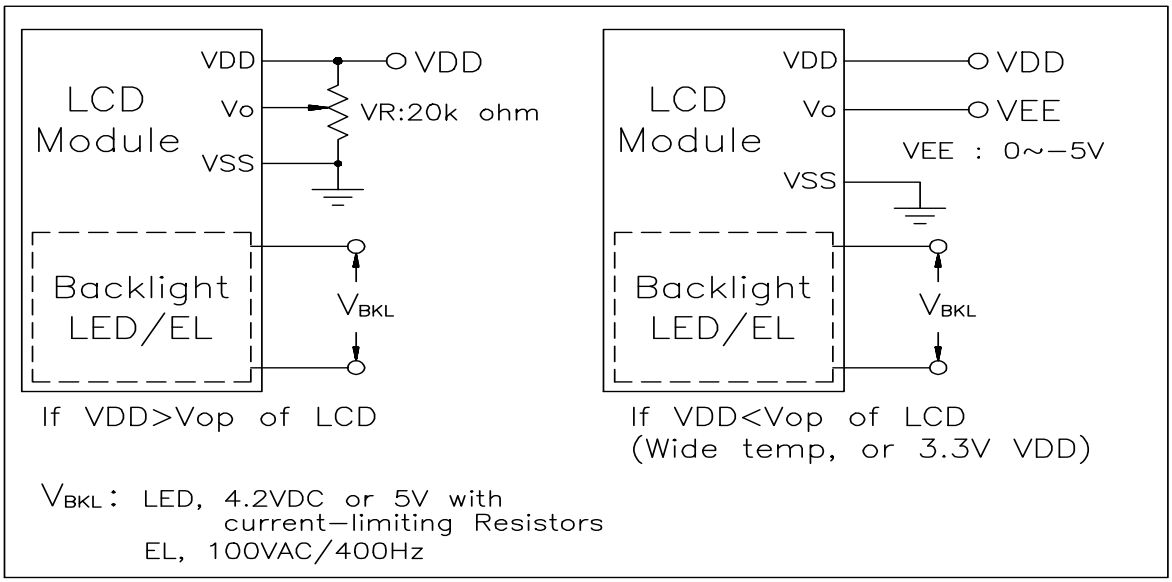

TIMING CHARACTERISTICS

AC Characteristics (V_{SS} = 0V, V_{DD}= 4.5V to 5.0V, Ta = 0 to 50℃)

Mode	Characteristic	Symbol	Min.	Typ.	Max.	Unit
Write Mode	E Cycle Time	t_C	500	--	--	ns
	E Rise / Fall Time	t_R, t_F	--	--	20	ns
	E Pulse Width (High, Low)	t_W	230	--	--	ns
	R/W And RS Setup Time	t_{SU1}	40	--	--	ns
	R/W And RS Hold Time	t_{H1}	10	--	--	ns
	Data Setup Time	t_{SU2}	80	--	--	ns
	Data Hold Time	t_{H2}	10	--	--	ns
Read Mode	E Cycle Time	t_C	500	--	--	ns
	E Rise / Fall Time	t_R, t_F	--	--	20	ns
	E Pulse Width (High, Low)	t_W	230	--	--	ns
	R/W And RS Setup Time	t_{SU}	40	--	--	ns
	R/W And RS Hold Time	t_H	10	--	--	ns
	Data Setup Time	t_D	--	--	120	ns
	Data Hold Time	t_{DH}	5	--	--	ns

AC Characteristics (V_{SS} = 0V, V_{DD}= 2.7V to 4.5V, Ta = 0 to 50℃)

Mode	Characteristic	Symbol	Min.	Typ.	Max.	Unit
Write Mode	E Cycle Time	t_C	1000	--	--	ns
	E Rise / Fall Time	t_R, t_F	--	--	25	ns
	E Pulse Width (High, Low)	t_W	450	--	--	ns
	R/W And RS Setup Time	t_{SU1}	60	--	--	ns
	R/W And RS Hold Time	t_{H1}	20	--	--	ns
	Data Setup Time	t_{SU2}	195	--	--	ns
	Data Hold Time	t_{H2}	10	--	--	ns
Read Mode	E Cycle Time	t_C	1000	--	--	ns
	E Rise / Fall Time	t_R, t_F	--	--	25	ns
	E Pulse Width (High, Low)	t_W	450	--	--	ns
	R/W And RS Setup Time	t_{SU}	60	--	--	ns
	R/W And RS Hold Time	t_H	20	--	--	ns
	Data Setup Time	t_D	--	--	360	ns
	Data Hold Time	t_{DH}	5	--	--	ns

READ/WRITE TIMING CHART

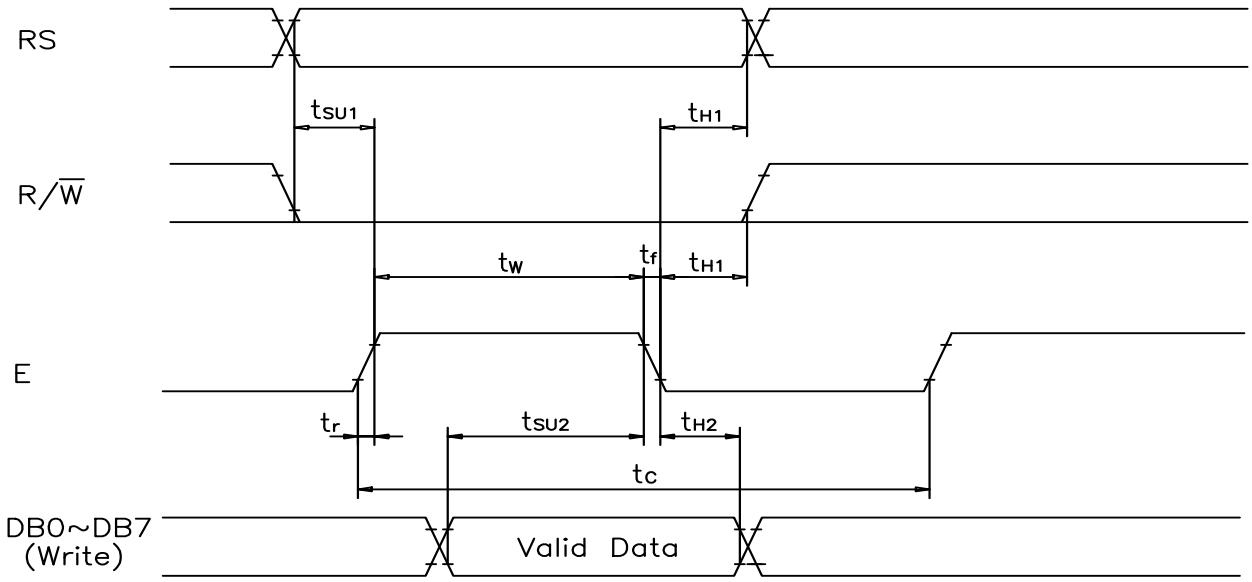

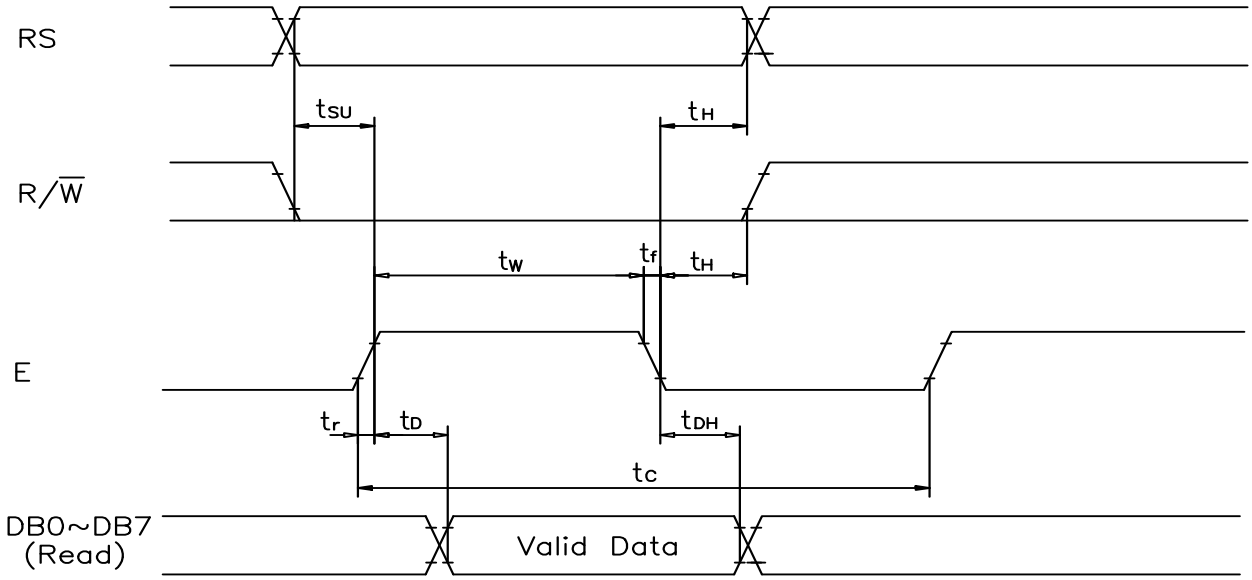

COMMANDS

Instruction	Instruction Code										Description	Execution time (f_{OSC} is 270kHz)
	RS	R/W	DB7	DB6	DB5	DB4	DB3	DB2	DB1	DB0		
Clear Display	0	0	0	0	0	0	0	0	0	1	Write "20H" to DDRAM. and set DDRAM address to "00H" from AC	1.53mS
Return Home	0	0	0	0	0	0	0	0	1	*	Set DDRAM address to "00H" from AC and return cursor to its original position if shifted. The contents of DDRAM are not changed.	1.53mS
Entry Mode	0	0	0	0	0	0	0	1	I/D	SH	Assign cursor moving direction and make shift of entire display enable.	39 µS
Display ON/OFF	0	0	0	0	0	0	1	D	C	B	Set display (D), cursor (C), and blinking of cursor (B) on / off control bit.	39 µS
Cursor or Display Shift	0	0	0	0	0	1	S/C	R/L	*	*	Set cursor moving and display shift control bit, and the direction, without changing DDRAM data.	39 µS
Function Set	0	0	0	0	1	DL	N	F	*	*	Set interface data length (DL: 4 – bit / 8 – bit), numbers of display line (N: 1 – line / 2 – line), display font type(F: 5 X 8 dots / 5 X 11 dots)	39 µS
Set CG RAM Address	0	0	0	1	AC5	AC4	AC3	AC2	AC1	AC0	Set CGRAM address in address counter.	39 µS
Set DD RAM Address	0	0	1	AC6	AC5	AC4	AC3	AC2	AC1	AC0	Set DDRAM address in address counter.	39 µS
Read Busy Flag and Address	0	1	BF	AC6	AC5	AC4	AC3	AC2	AC1	AC0	Whether during internal operation or not can be known by reading BF. The contents of address counter can also be read.	0 µS
Write Data to RAM	1	0	D7	D6	D5	D4	D3	D2	D1	D0	Write data into internal RAM (DDRAM / CGRAM).	43 µS
Read Data from RAM	1	1	D7	D6	D5	D4	D3	D2	D1	D0	Read data from internal RAM (DDRAM / CGRAM).	43 µS

* means don't care

COMMANDS DESCRIPTION

Clear Display

RS	R/W	DB7	DB6	DB5	DB4	DB3	DB2	DB1	DB0
0	0	0	0	0	0	0	0	0	1

Clear all the display data by writing "20H" (space code) to all DDRAM address, and set DDRAM address to "00H" into AC (address counter). Return cursor to the original status. namely, bring the cursor to the left edge on first line of the display. Make entry mode increment (I/D = "1").

Return Home

RS	R/W	DB7	DB6	DB5	DB4	DB3	DB2	DB1	DB0
0	0	0	0	0	0	0	0	1	*

Return Home is cursor return home instruction. Set DDRAM address to "00H" into the address counter.
Return cursor to its original site and return display to its original status, if shifted. Content of DDRAM is not changed.

Entry Mode Set

RS	R/W	DB7	DB6	DB5	DB4	DB3	DB2	DB1	DB0
0	0	0	0	0	0	0	1	I/D	SH

Set the moving direction of cursor and display.
I/D: Increment / decrement of DDRAM address (cursor or blink)
When I/D = "High", cursor / blink moves to right and DDRAM address is increased by 1.
When I/D = "Low", cursor / blink moves to left and DDRAM address is decreased by 1.
* CGRAM operates the same as DDRAM, when read from or write to CGRAM.
SH: Shift of entire display
When DDRAM read (CGRAM read/write) operation or SH = "Low", shift of entire display is not performed.
If SH = "High" and DDRAM write operation, shift of entire display is performed according to I/D value (I/D = "1" , shift left, I/D = "0": shift right).

Display ON/OFF Control

RS	R/W	DB7	DB6	DB5	DB4	DB3	DB2	DB1	DB0
0	0	0	0	0	0	1	D	C	B

Control display / cursor / blink ON/OFF 1 bit register.

D: Display ON/OFF control bit

When D = "High", entire display is turned on.

When D = "Low", display is turned off, but display data is remained in DDRAM.

C: Cursor ON/OFF control bit

When C = "High", cursor is turned on.

When C = "Low", cursor is disappeared in current display, but I/D register remains its data.

B: Cursor Blink ON/OFF control bit

When B = "High", cursor blink is on, that performs alternate between all the high data and display character at the cursor position.

When B = "Low", blink is off.

Cursor or Display Shift

RS	R/W	DB7	DB6	DB5	DB4	DB3	DB2	DB1	DB0
0	0	0	0	0	1	S/C	R/L	*	*

Without writing or reading of display data, shift right / left cursor position or display.

This instruction is used to correct or search display data. (Refer to Table 4)

During 2 – line mode display, cursor moves to the 2nd line after 40th digit of 1st line.

Note that display shift is performed simultaneously in all the line.

When displayed data is shifted repeatedly, each line shifted individually.

When display shift is performed, the contents of address counter are not changed.

S/C	R/L	Operation
0	0	Shift cursor to the left, AC is decreased by 1.
0	1	Shift cursor to the right, AC is increased by 1.
1	0	Shift all of the display to the left, cursor moves according to the display.
1	1	Shift all of the display to the right, cursor moves according to the display.

Function Set

RS	R/W	DB7	DB6	DB5	DB4	DB3	DB2	DB1	DB0
00	0	0	0	1	DL	N	F	*	*

DL: Interface data length control bit
When DL = "High", it means 8 – bit bus mode with MPU.
When DL = "Low", it means 4 – bit bus mode with MPU. So to speak, DL is a signal to select 8 – bit or 4 – bit bus mode. When 4 – bit bus mode, it needs to transfer 4 – bit data by two times.
N: Display line number control bit
When N = "Low", it means 1 – line display mode.
When N = "High", 2 – line display mode is set.
F: Display font type control bit
When F = "Low", it means 5 X 8 dots format display mode
When F = "High", 5 x11 dots format display mode.

Set CG RAM Address

RS	R/W	DB7	DB6	DB5	DB4	DB3	DB2	DB1	DB0
0	0	0	1	AC5	AC4	AC3	AC2	AC1	AC0

Set CGRAM address to AC.
This instruction makes CGRAM data available from MPU.

Set DD RAM Address

RS	R/W	DB7	DB6	DB5	DB4	DB3	DB2	DB1	DB0
0	0	1	AC6	AC5	AC4	AC3	AC2	AC1	AC0

Set DDRAM address to AC.
This instruction makes DDRAM data available from MPU.
When 1 – line display mode (N = 0), DDRAM address is from "00H" to "4FH".
In 2 – line display mode (N = 1), DDRAM address in the 1st line is from "00H" to "27H", and DDRAM address in the 2nd line is from "40H" to "67H".

Read Busy Flag and Address

RS	R/W	DB7	DB6	DB5	DB4	DB3	DB2	DB1	DB0
0	1	BF	AC6	AC5	AC4	AC3	AC2	AC1	AC0

This instruction shows whether ST 7066 is in internal operation or not. If the resultant BF is High, it means the internal operation is in progress and you have to wait until BF to be Low, and then the next instruction can be performed. In this instruction you can read also the value of address counter.

Write Data to RAM

RS	R/W	DB7	DB6	DB5	DB4	DB3	DB2	DB1	DB0
1	0	D7	D6	D5	D4	D3	D2	D1	D0

Write binary 8 – bit data to DDRAM / CGRAM.
The selection of RAM from DDRAM, CGRAM, is set by the previous address set instruction: DDRAM address set, CGRAM address set. RAM set instruction can also determine the AC direction to
RAM. After write operation, the address is automatically increased / decreased by 1, according to the entry mode.

Read Data to RAM

RS	R/W	DB7	DB6	DB5	DB4	DB3	DB2	DB1	DB0
1	0	D7	D6	D5	D4	D3	D2	D1	D0

Read binary 8 – bit data from DDRAM / CGRAM.
The selection of RAM is set by the previous address set instruction. If address set instruction of RAM is not performed before this instruction, the data that read first is invalid, because the direction of
AC is not determined. If you read RAM data several times without RAM address set instruction before read operation, you can get correct RAM data from the second, but the first data would be incorrect, because there is no time margin to transfer RAM data.
In case of DDRAM read operation, cursor shift instruction plays the same role as DDRAM address set instruction : it also transfers RAM data to output data register. After read operation address counter is automatically increased/decreased by 1 according to the entry mode. After CGRAM read operation, display shift may not be executed correctly.

NOTE: In case of RAM write operation, after this AC is increased / decreased by 1 like read operation. In this time, AC indicates the next address position, but you can read only the previous data by read instruction.

DD RAM ADDRESSING

For 16 × 1 or 8 × 1 Display

Character	1	2	3	4	5	6	7	8	9	10	11	12	13	14	15	16
DD RAM Address	00	01	02	03	04	05	06	07	40	41	42	43	44	45	46	47

For 16 × 2 or 8 × 2 Display

Character	1	2	3	4	5	6	7	8	9	10	11	12	13	14	15	16
DD RAM Address	00	01	02	03	04	05	06	07	08	09	0A	0B	0C	0D	0E	0F
	40	41	42	43	44	45	46	47	48	49	4A	4B	4C	4D	4E	4F

For 16 × 4 Display

Character	1	2	3	4	5	6	7	8	9	10	11	12	13	14	15	16
DD RAM Address	00	01	02	03	04	05	06	07	08	09	0A	0B	0C	0D	0E	0F
	40	41	42	43	44	45	46	47	48	49	4A	4B	4C	4D	4E	4F
	10	11	12	13	14	15	16	17	18	19	1A	1B	1C	1D	1E	1F
	50	51	52	53	54	55	56	57	58	59	5A	5B	5C	5D	5E	5F

For 20 × 2 Display

Character	1	2	3	4	5	6	7	8	9	10	…	…	17	18	19	20
DD RAM Address	00	01	02	03	04	05	06	07	08	09	…	…	10	11	12	13
	40	41	42	43	44	45	46	47	48	49	…	…	50	51	52	53

For 20 × 4 Display

Character	1	2	3	4	5	6	7	8	9	10	…	…	17	18	19	20
DD RAM Address	00	01	02	03	04	05	06	07	08	09	…	…	10	11	12	13
	40	41	42	43	44	45	46	47	48	49	…	…	50	51	52	53
	14	15	16	17	18	19	1A	1B	1C	1D	…	…	24	25	26	27
	54	55	56	57	58	59	5A	5B	5C	5D	…	…	64	65	66	67

For 40 × 2 Display

Character	1	2	3	4	5	6	7	8	9	10	…	…	37	38	39	40
DD RAM Address	00	01	02	03	04	05	06	07	08	09	…	…	24	25	26	27
	40	41	42	43	44	45	46	47	48	49	…	…	64	65	66	67

For 40 × 4 Display

Character	E	1	2	3	4	5	6	7	8	9	10	…	…	37	38	39	40
DD RAM Address	E1	00	01	02	03	04	05	06	07	08	09	…	…	24	25	26	27
		40	41	42	43	44	45	46	47	48	49	…	…	64	65	66	67
	E2	00	01	02	03	04	05	06	07	08	09	…	…	24	25	26	27
		40	41	42	43	44	45	46	47	48	49	…	…	64	65	66	67

CG RAM MAPPING

Character Code (DD RAM data)								CG RAM Address						Character Patterns (CG RAM data)								
7	6	5	4	3	2	1	0	5	4	3	2	1	0	7	6	5	4	3	2	1	0	
High							Low	High					Low	High							Low	
0	0	0	0	*	0	0	0	0	0	0	0	0	0	*	*	*	0	1	1	0	0	←Character Pattern
											0	0	1				1	0	0	1	0	
											0	1	0				0	0	1	0	0	
											0	1	1				0	1	0	0	0	
											1	0	0				1	1	1	1	0	
											1	0	1				0	0	0	0	0	
											1	1	0				0	0	0	0	0	
											1	1	1				0	0	0	0	0	←Cursor
0	0	0	0	*	0	0	1	0	0	1	0	0	0	*	*	*	1	1	1	1	1	←Character Pattern
											0	0	1				1	0	0	0	1	
											0	1	0				1	0	1	0	1	
											0	1	1				1	0	1	1	1	
											1	0	0				1	0	1	0	1	
											1	0	1				1	0	0	0	1	
											1	1	0				1	1	1	1	1	
											1	1	1				0	0	0	0	0	←Cursor
⋮	⋮	⋮	⋮	⋮	⋮	⋮	⋮	⋮	⋮	⋮	⋮	⋮	⋮	⋮	⋮	⋮	⋮	⋮	⋮	⋮	⋮	
0	0	0	0	*	1	1	1	1	1	1	0	0	0	*	*	*	1	1	1	1	1	←Character Pattern
											0	0	1				1	0	0	0	1	
											0	1	0				1	1	1	0	1	
											0	1	1				1	0	0	0	1	
											1	0	0				1	0	1	1	1	
											1	0	1				1	0	0	0	1	
											1	1	0				1	1	1	1	1	
											1	1	1				0	0	0	0	0	←Cursor

CHARACTER FONT TABLE

RELIABILITY TEST

No	Item	Conditions		Note
1.	High Temp. Operation	70℃	240 HR	--
2.	High Temp. Storage	80℃	240 HR	--
3.	Low Temp. Operation	-20℃	240 HR	--
4.	Low Temp. Storage	-30℃	240 HR	--
5.	High Temp. / Humid Storage	40℃ 90% RH	240 HR	--
6.	Thermal Shock	0℃, 30min +50℃, 30min	10 cycles	--
7.	Vibration Test (IEC – 68 – 2 – 6)	Frequency: 10 ~ 55 Hz Duration: 20 times, 6 min / time Amplitude: 0.75 mm	--	--
8.	Shock (IEC 68 – 2 – 27)	Duration: 11 mS Acceleration: 100g	--	X, Y, Z direction

APPEARANCE CHECK

CONDIITON OF APPEARANCE CHECK:
(1)Specimen shall be checked by eyes in distance of 30cm under 40w – fluorescence lamp.
(2)Checking direction shall be in 45 degree from perpendicular line op specimen surface.

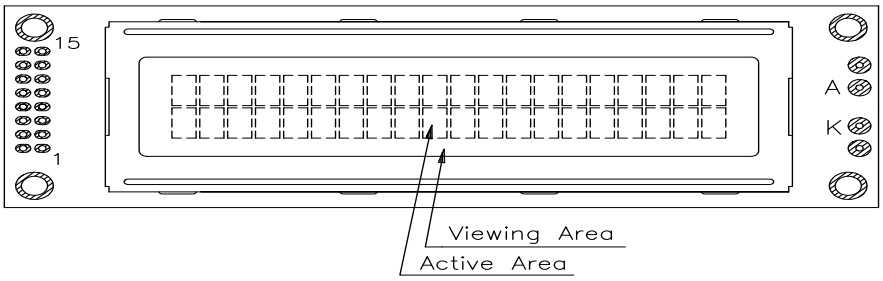

HANDLING PRECAUTIONS

(1) Treat polarizer very carefully since it is easy to be damaged.

(2) When cleaning the display surface, use soft cloth (e.g. gauss) with a solvent (recommended below) and wipe lightly.

- ◆ ethyl alcohol
- ◆ iso – prcolol

Do not wipe the display surface with dry or hard materials that will damage the polarizer surface.

Do not use the following solvents:

- ◆ water
- ◆ ketone
- ◆ aromatics

(3) Direct current causes electro-chemical reaction with remarkable degradation of the display quality. Give careful consideration to prevent direct current at ON / OFF timing and during operation.

(4) Avoid strong shock and drop from the height.

(5) To prevent LCD panels from degradation, do not operate or store them exposed directly to sunshine or high temperature/humidity.

(6) Give careful consideration to avoid electrical static discharge with causes uneven contrast.

(7) Even a small condensation on the contact pads (terminals) causes electro – chemical reaction which makes missing row and column.
Give careful attention to avoid condensation. When assembling with zebra connector, clean the surface of the pads with alcohol and keep the air very clean.

LCD PRODUCT QUALITY STANDARD

DISPLAY APPEARANCE

No	Item	Criteria
1.	Inclusions (Black spot, White spot, dust)	(1) Round type Diameter mm (a*) no of defect* a≦0.20 neglect 0.20＜a≦0.35 5max 0.35＜a none (2) Linear type Length mm (l) width mm (W) no. of defect na W≦0.03 neglect l≦3 0.03＜W≦0.08 6 3＜l 0.08＜W none
2.	Scratch	1. Scratch on protective film is permitted. 2. Scratch on polarizer shall be as follow: (1) Round type Diameter mm (a*) no of defect a≦0.15 neglect 0.15＜a≦0.20 2 max 0.20＜a none (2) Linear type be judged bye 1. – (2) linear type
3.	Dent	Diameter＜1.5mm
4.	Bubble	Not exceeding 0.5mm average diameter is acceptable between glass and polarizing film
5.	Pin hole	(a + b) /2≦0.15mm Maximum number: ignored 0.15＜(a + b) /2≦0.20mm Maximum number: 10

No	Item	Criteria
6.	Dot defect	(a + b) /2≦0.20mm Maximum number: ignored 0.20＜(a + b) /2≦0.30mm Maximum number: 5 X = Width
7.	Contrast irregularity (Spot)	Diameter spec — no of defect a≦0.50mm — neglect 0.50＜a≦0.75 — 5 0.75＜a≦1.00 — 3 1.00＜a — none
8.	Dot width	Design width ± 15%
9.	Color tone and uniformity	Obvious uneven color is not permitted

WARRANTY

This product has been manufactured to your company's specifications as a part for use in your company's general electronic products. It is guaranteed to perform according to delivery specifications. For any other use apart from general electronic equipment, we cannot take responsibility if the product is used in medical devices, nuclear power control equipment, aerospace equipment, fire and security systems, or any other applications in which there is a direct risk to human life and where extremely high levels of reliability are required. If the product is to be used in any of the above applications, we will need to enter into a separate product liability agreement.

1. 13-month guarantee starts from the date code.
2. We cannot accept responsibility for any defect, which may arise from additional manufacturing of the product (including disassembly and reassembly), after product delivery.
3. We cannot accept responsibility for any defect, which may arise after the application of strong external force to the product.
4. We cannot accept responsibility for any defect, which may arise due to the application of static electricity after the product has passed your company's acceptance inspection procedures.
5. We cannot accept responsibility for industrial property, which may arise through the use of your product, with exception to those issues relating directly to the structure or method of manufacturing of our product. Microtips-origin longer than one year from Microtips production.

DIMENSIONAL OUTLINES

- See the next page……..

REV.	DESCRIPTION	DRAWN	CHECK	APP'D	DATE
A	Product Release	JackLi	Jeffrey		05/10/05"
B	to modify aperture	Zhaiyudong	Dano		02/17/11"

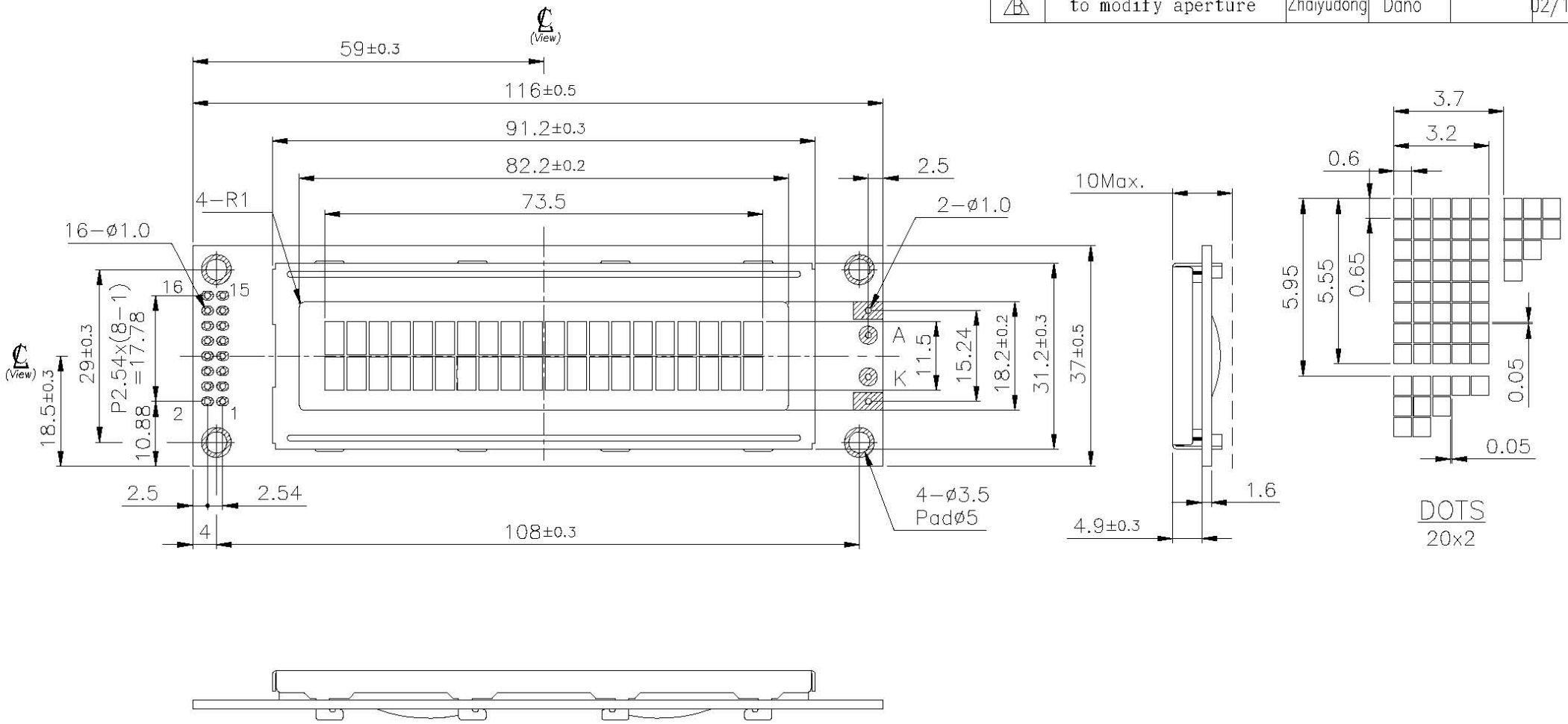

PIN ASSIGNMENT							
1.	VSS	5.	R/W	9.	DB2	13.	DB6
2.	VDD	6.	E	10.	DB3	14.	DB7
3.	VEE	7.	DB0	11.	DB4	15.	BKL A
4.	RS	8.	DB1	12.	DB5	16.	BKL K

NO.	PART NAME	Q'TY	DATE:	MATERIAL	FINISH
	M−20200X		02−17−11'		

DRAWN	CHECK	APP'D	UNIT: MM	SCALE: 1 / 1	FOR MODULE: MTC−20200X
Zhaiyudong	Dano			UNLESS OTHERWISE SPECIFIED TOLERANCE ON FRACTIONS DECIMALS ANGLES 0.10 0.5°	DWG NO.: C20200X0
					FILE: DWG\Design\LCM\MTC\MTC−20200X\2D
					SHEET 1 / 1 Rev: B

Microtips Technology

Mouser Electronics

Authorized Distributor

Click to View Pricing, Inventory, Delivery & Lifecycle Information:

Microtips Technology:
NMTC-S20200XRGHS-10B