LIQUID CRYSTAL DISPLAY MODULE
MODEL: NMTC-S0802XFYHSAY-15
Customer's No.:

Acceptance

Microtips Technology Inc.
12F. No.31 Lane 169, Kang Ning St., His-Chih,
Taipei Hsien, Taiwan, R.O.C.
FAX: 886-2-26958625

Approved and Checked by

Approved by	Checked by		Made by
微 端 2017/08/31 連俊傑	微 端 2017/08/31 韋有乾	微 端 2017/08/31 洪振益	微 端 2017/08/31 許瓊窈

Microtips Technology

Microtips Technology Inc.

Revise Records

Rev.	Date	Contents	Written	Approved
A.	2017/08/31	See Note 1.	Jill Hsu	Danny Lien

Special Notes

Note 1.	The LCD module is compliant with RoHS.
Note 2.	
Note 3.	
Note 4.	
Note 5.	

CONTENTS

No.	Item.	Page.
1.	General Specifications…….	4.
2.	Electrical Specifications…….....	5.
3.	Lighting Specifications…….	8.
4.	Optical Specification……	9.
5.	I/O Terminal…….	11.
6.	Reliability Test…….....	13.
7.	Appearance Standards…….....	15.
8.	Handling and Precautions……	18.
9.	Warranty……...	19.
10.	Dimensional Outline…….....	20.

1. General Specifications

Operating Temperature.	: Min. -20°C ～ Max. 70°C
Storage Temperature.	: Min. -30°C ～ Max. 80°C
Display Format	: 8 characters x 2 lines
Display Fonts	: 5 x 7 dots + cursor (1 character)
Viewing Area	: 38.0 (W) x 16.0 (H) mm
Outline Dimensions	: 58.0 (W) x 32.0 (H) x 13.5 max. (D) mm
Weight	: N/A
LCD Type	: STN / Positive, Yellow – Green Mode / Transflective
Viewing Direction	: 6:00
Backlight	: LED Array (Yellow – Green)
Drawings	: As attached drawings

2. Electrical Specifications

2.1 Absolute Maximum Ratings

$V_{SS} = 0V$

Parameter	Symbol	Conditions	Min.	Max.	Units
Supply Voltage (Logic)	$V_{DD} - V_{SS}$	--	2.7	5.5	V
Supply Voltage (LCD Drive)	$V_{DD} - V_{EE}$	--	4.2	4.6	V
Input Voltage	V_{IN}	--	-0.3	V_{DD}+0.3	V

2.2 DC Characteristics

Ta = 25°C, $V_{SS} = 0V$

Parameter	Symbol	Conditions	Min.	Typ.	Max.	Units
Supply Voltage (Logic)	$V_{DD} - V_{SS}$	--	2.7	4.5	5.5	V
Supply Voltage (LCD Drive)	$V_{DD} - V_{EE}$	Shown in 3.1				V
High Level Input Voltage	V_{IH}	$V_{DD} = 5.0V \pm 10\%$	2.2	--	V_{DD}	V
Low Level Input Voltage	V_{IL}	$V_{DD} = 5.0V \pm 10\%$	0	--	0.6	V
High Level Output Voltage	V_{OH}	$I_{OH} = -0.205mA$	2.4	--	V_{DD}	V
Low Level Output Voltage	V_{OL}	$I_{OL} = 1.2mA$	0	--	0.4	V
Supply Current	I_{DD}	$V_{DD} - V_{SS} = 5.0V$	--	1.5	3.0	mA

2.3 AC Characteristics

V_{DD} = 5.0V ± 10%

Parameter	Symbol	Conditions	Min.	Max.	Units
Enable Cycle Time	t_{CYC}	Fig.1, 2	500	--	ns
Enable Pulse Width	PW_{EH}	Fig.1, 2	230	--	ns
Enable Rise / Fall Time	t_{Er}, t_{Ef}	Fig.1, 2	--	20	ns
Address Setup Time	t_{AS}	Fig.1, 2	40	--	ns
Address Hold Time	t_{AH}	Fig.1, 2	10	--	ns
Write Data Setup Time	t_{DSW}	Fig.1	80	--	ns
Write Data Hold Time	t_{DHW}	Fig.1	10	--	ns
Read Data Delay Time	t_{DDR}	Fig.2	--	160	ns
Read Data Hold Time	t_{DHR}	Fig.2	5	–	ns

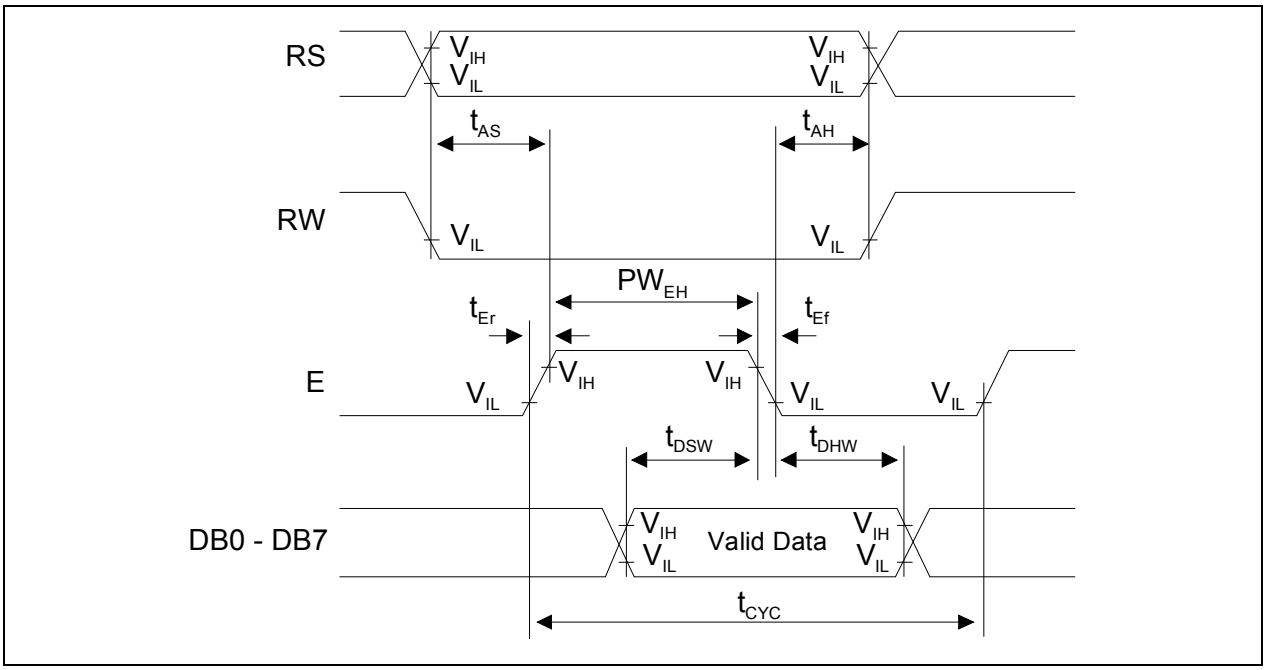

Fig.1 Write Operation Timing

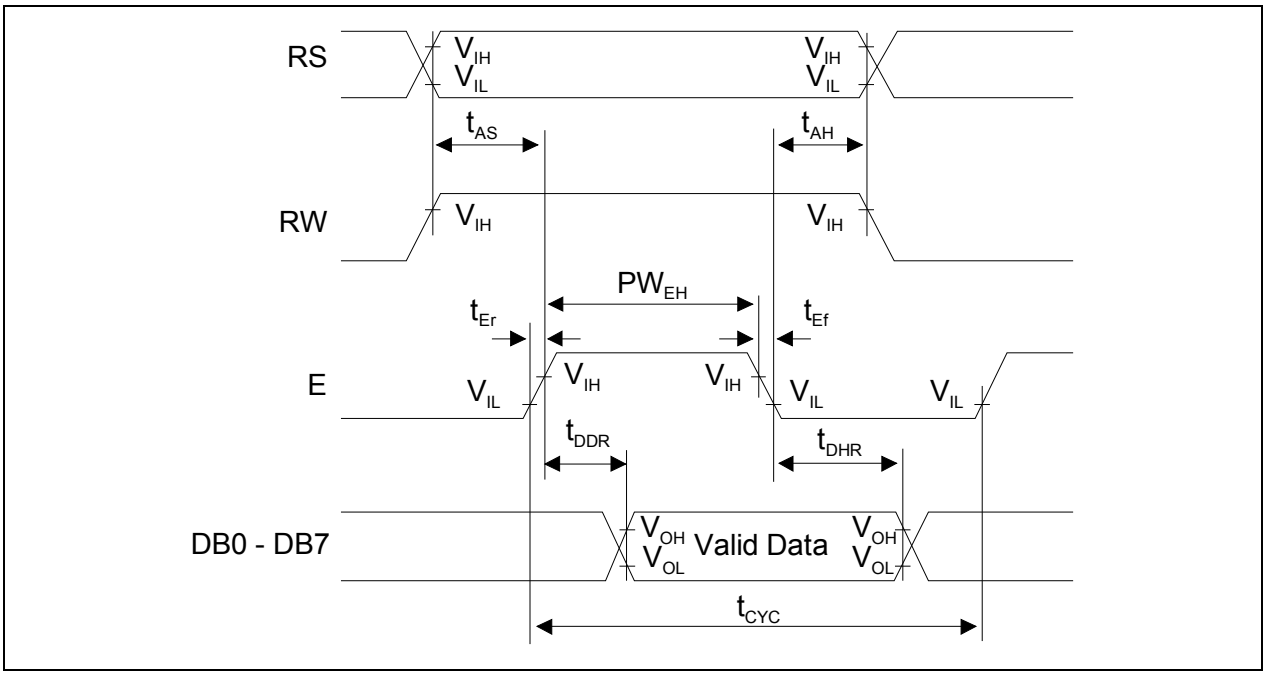

Fig.2 Read Operation Timing

3. Lighting Specifications

3.1.1 Absolute Maximum Ratings

Ta = 25°C

Parameter	Symbol	Conditions	Min.	Typ.	Max.	Units
Forward Current	I_F	--	--	--	105	mA
Reverse Voltage	V_R	--	--	--	8.0	V
LED Power Dissipation	P_D	--	--	--	0.5	W

3.1.2 Operating Characteristics

Ta = 25°C

Parameter	Symbol	Conditions	Min.	Typ.	Max.	Units
Forward Voltage	V_F	I_F = 200mA	4.0	4.2	4.6	V
Peak Emission Wavelength (Note 1)	λ_P	I_F = 200mA	--	570	572	nm
Luminance of Backlight Surface	L	I_F = 200mA	80	100	--	cd/m^2
Luminous Tolerance (Note 2)	--	--	--	--	--	%

4. Optical Specifications

4.1 LCD Driving Voltage

Parameter	Symbol	Conditions	Min.	Typ.	Max.	Units
LCD Driving Voltage Note 1	$V_{DD} - V_{EE}$	Ta = -20 °C	4.48	4.78	5.08	V
		Ta = 25 °C	4.20	4.50	4.80	V
		Ta = 70 °C	3.92	4.22	4.52	V

Note 1: Voltage (Applied actual waveform to LCD Module) for the best contrast. The range of minimum and maximum shows tolerance of the operating voltage. The specified contrast ratio and response time are not guaranteed over the entire range.

4.2 Optical Characteristics

Ta = 25 °C, 1/16 Duty, 1/5 Bias, V_{DD} = 4.5V (Note 4), θ = 0°, ϕ = 0°

Parameter		Symbol	Conditions	Min.	Typ.	Max.	Units
Contrast Ratio Note 1		CR	θ = 0°, ϕ = 0°	2	7	--	--
Viewing Angle (Cr≧2) (Shown in 3.3)		Front – Back	$\theta_f - \theta_b$, ϕ = 0°	+115	to	-30	deg.
		Left – Right	$\theta_l - \theta_r$, ϕ = 0°	+96	to	-60	deg.
Response Time	Rise Note 2	T_{ON}	--	--	110	240	msec
	Decay Note 3	T_{OFF}	--	--	170	250	msec

Note 1: Contrast ratio is defined as follows.
$CR = L_{OFF} / L_{ON}$
L_{ON}: Luminance of the ON segments, L_{OFF}: Luminance of the OFF segments

Note 2: The time that the luminance level reaches 90% of the saturation level from 0% when ON signal is applied.

Note 3: The time that the luminance level reaches 10% of the saturation level from 100% when OFF signal is applied.

Note 4: Definition of Driving Voltage V_D. Assuming that the typical driving waveforms shown below are applied to the LCD Panel at /A Duty – 1/B Bias (A: Duty Number, B: Bias Number). Driving voltage V_D is defined s follows: V_D = (Vth1 + Vth2) /2

Vth1: The voltage VO – P that should provide 50% of the saturation level in the luminance at the segment which the ON signal is applied to.

Vth2: The voltage VO – P that should provide 50% of the saturation level in the luminance at the segment which the OFF signal is applied to.

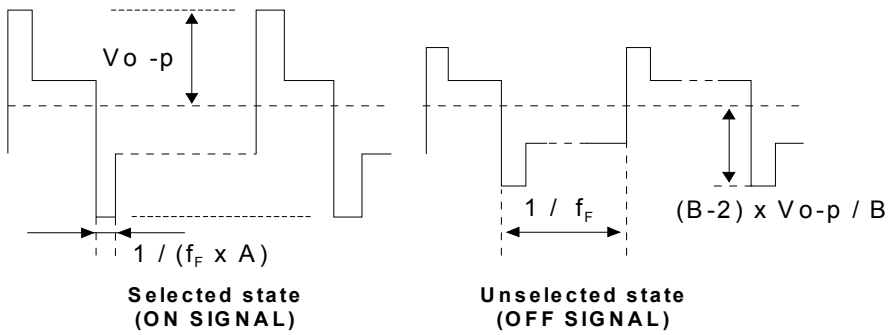

4.3 Definition of Viewing Angle and Optimum Viewing Area

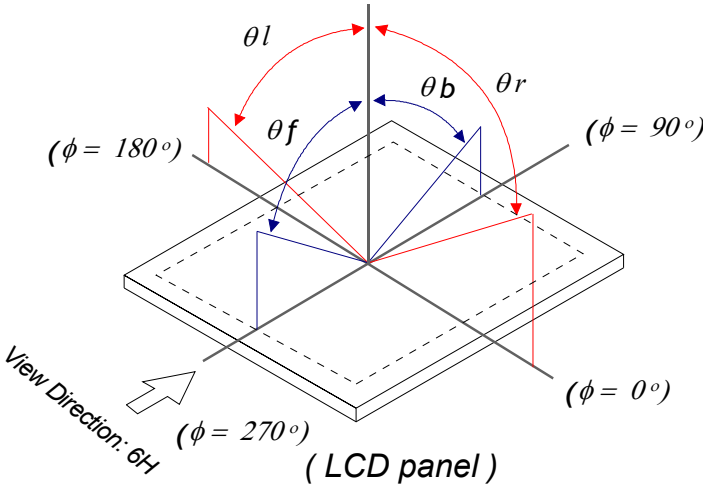

4.4 Definition of Viewing Angle θ_f and θ_b

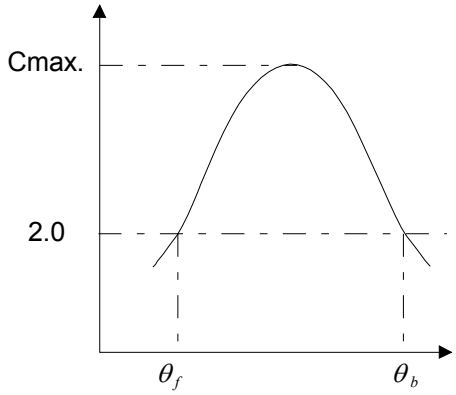

Viewing angles θ (ϕ fixed)

Optimum viewing angle with the naked eye and viewing angle θ at Cmax. Above are not always the same.

4.5 Definition of Contrast C, *C= Brightness of selected dot (B1)/ Brightness of unselected dot (B2)*

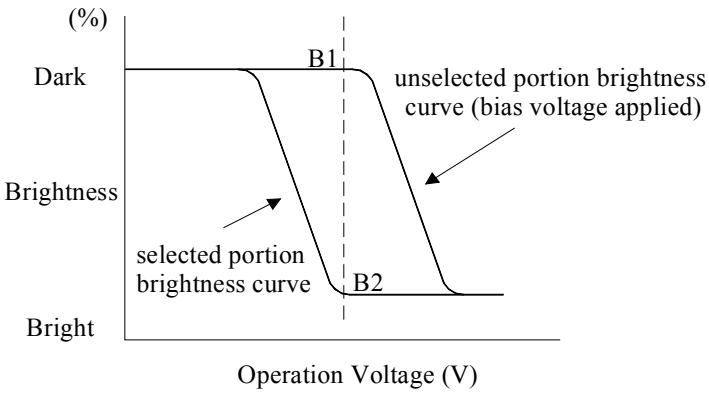

5. I/O Terminal

5.1 Pin Assignment

No.	Symbol	Level	Function
1	VSS	--	Power Supply (0V, GND)
2	VDD	--	Power Supply for Logic
3	VEE (V0)	--	Power Supply for LCD Drive
4	RS	H / L	Register Select Signal
5	R/W	H / L	Read / Write Select Signal H: Read L: Write
6	E	H / L	Enable Signal (No pull – up Resister)
7	DB0	H / L	Data Bus Line / Non – connection at 4 – bit operation
8	DB1	H / L	Data Bus Line / Non – connection at 4 – bit operation
9	DB2	H / L	Data Bus Line / Non – connection at 4 – bit operation
10	DB3	H / L	Data Bus Line / Non – connection at 4 – bit operation
11	DB4	H / L	Data Bus Lin
12	DB5	H / L	Data Bus Line
13	DB6	H / L	Data Bus Line
14	DB7	H / L	Data Bus Line

5.2 Example of Power Supply

It is recommended to apply a potentiometer for the contrast adjust due to the tolerance of the driving voltage and its temperature dependence.

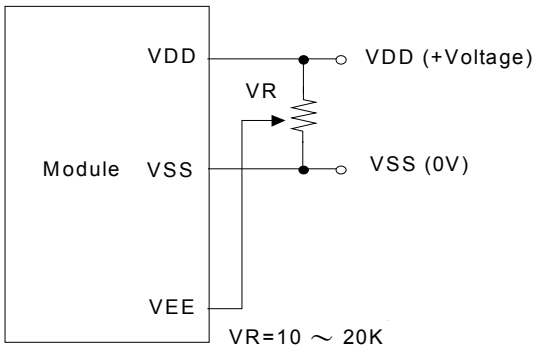

5.3 Block Diagram

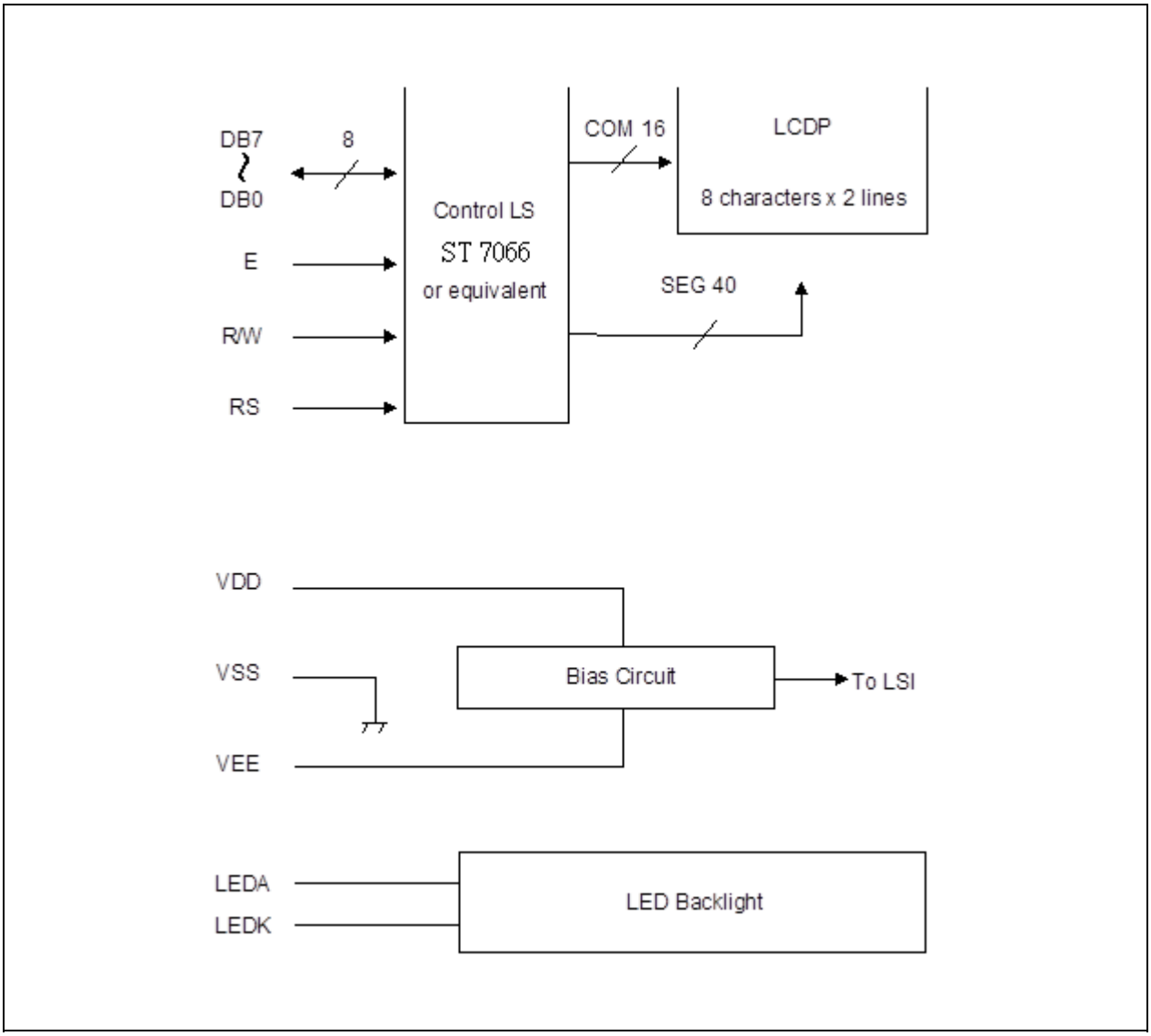

6. Reliability Test

6.1 Test Item

No change on display and in operation under the following test condition.

No.	Test Item	Description	Condition	Note
1.	High Temperature (Operation)	Durability test under long time high temperature with electrical stress (voltage, current)	70°C ± 2°C, 96hrs	--
2.	High Temperature (Storage)	Durability test under long time high temperature storage	80°C ± 2°C, 96hrs	4
3	Low Temperature (Operation)	Durability test under long time low temperature with electrical stress (voltage, current)	-20°C ± 2°C, 96hrs	3
4	Low Temperature (Storage)	Durability test under long time low temperature storage	-30°C ± 2°C, 96hrs	3, 4
5	Damp Proof Test	Durability test under long time high temperature and high humidity	40°C ± 2°C, 90～95% RH 96hrs	3, 4
6.	Vibration Test	Total fixed amplitude: 1.5mm Vibration frequency: 10～55Hz One cycle 60 seconds to 3 directions of X, Y, Z for each 15 minutes	--	5
7.	Drop Test	To be measured after dropping from 60cm high on the concrete surface in packing state. 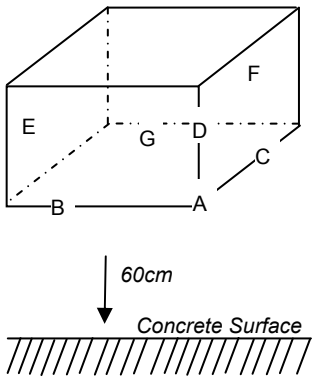 *Dropping method corner dropping* *A corner: once* *Edge dropping* *B, C, D edge: once* *Face dropping* *E, F, G face: once*		--

Note 1: Unless otherwise specified, tests will be conducted under the following condition,
Temperature : 25°C ± 2°C
Humidity : 65% ± 5%
Note 2: Unless otherwise specified, tests will be not conducted under functioning state.
Note 3: No dew condensation to be observed.
Note 4: The function test shall be conducted after 4 hours storage at the normal temperature and humidity after removed from the test chamber.
Note 5: Vibration test will be conducted to the product itself without putting it in a container.

6.2 Judgment Standard

Failure Mode	Test Item							Judgment Standard
	1	2	3	4	5	6	7	
Orientation	*	*	*	*	*			No remarkable degradation of appearance under bias / non – bias condition
Current Value (IAC)	*	*	*	*	*			No remarkable increase
Contrast	*		*	*	*			No remarkable poor contrast
Domain	*	*	*	*	*			Less than 20% of all dots have reverse tilt of more than on third of one dot area.
Bubble (Inside Cell)	*	*	*	*	*	*		As per “Appearance Standard” (Note. including one which disappear after 25°C 2H)
Polarizer	*				*	*		As per “Appearance Standard” no remarkable appearance change
Glass Damage							*	As per “Appearance Standard”

Note. 1. * is strong linkage between Failure Mode and Test Item.
2. Number of Test Item should be referred to former page.
3. Judgment and Standard value should be fixed by other inspection standard and criteria samples.

7. Appearance Standards

7.1 Inspection Conditions

The LCD shall be inspected under 40W white fluorescent light.
The distance between the eyes and the sample shall be more than 30cm.
All directions for inspecting the sample should be within 45° against perpendicular line.

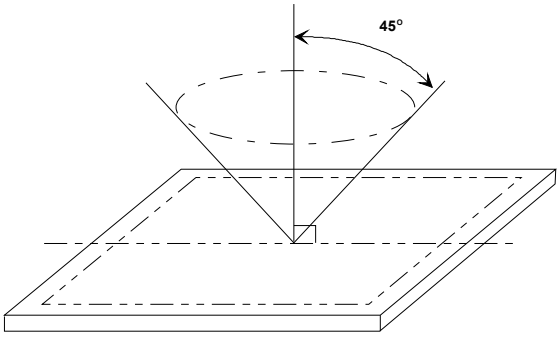

7.2 Definition of Applicable Zones

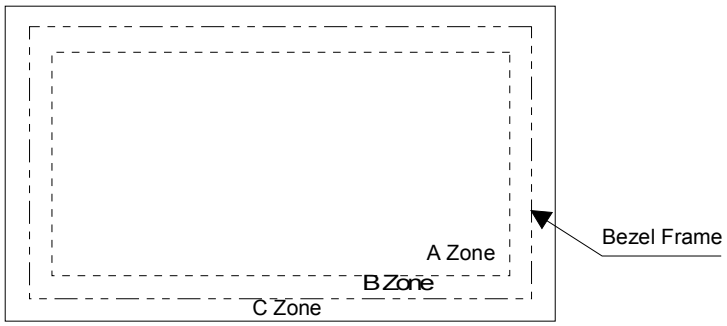

A Zone: Active display area
B Zone: Area from outside of "A Zone" to validity viewing area
C Zone: Rest parts
A Zone + B Zone = Validity viewing area

7.3 Standards

<table>
<tr><th>No.</th><th>Parameter</th><th>Criteria</th></tr>
<tr><td>1.</td><td>Black and White Spots, Foreign Substances</td><td>
(1) Round Shape
<table>
<tr><th>Zone / Dimension (mm)</th><th>Acceptable Number</th><th></th><th></th></tr>
<tr><th></th><th>A</th><th>B</th><th>C</th></tr>
<tr><td>D ≤ 0.1</td><td>*</td><td>*</td><td>*</td></tr>
<tr><td>0.1 < D ≤ 0.2</td><td>3</td><td>5</td><td>*</td></tr>
<tr><td>0.2 < D ≤ 0.25</td><td>2</td><td>3</td><td>*</td></tr>
<tr><td>0.25 < D ≤ 0.3</td><td>0</td><td>1</td><td>*</td></tr>
<tr><td>0.3 < D</td><td>0</td><td>0</td><td>*</td></tr>
</table>
D = (Long + Short) /2 *: Disregard
(2) Line Shape
<table>
<tr><th>Zone / X (mm)</th><th>Y (mm)</th><th>Acceptable Number</th><th></th><th></th></tr>
<tr><th></th><th></th><th>A</th><th>B</th><th>C</th></tr>
<tr><td>--</td><td>0.03 ≥ W</td><td>*</td><td>*</td><td>*</td></tr>
<tr><td>2.0 ≥ L</td><td>0.05 ≥ W</td><td>3</td><td>3</td><td>*</td></tr>
<tr><td>1.0 ≥ L</td><td>0.1 ≥ W</td><td>3</td><td>3</td><td>*</td></tr>
<tr><td>--</td><td>0.1 < W</td><td colspan="3">In the same way (1)</td></tr>
</table>
X: Length Y: Width *: Disregard
Total defects shall not exceed 5.
</td></tr>
<tr><td>2.</td><td>Air Bubbles (between glass & polarizer)</td><td>
<table>
<tr><th>Zone / Dimension (mm)</th><th>Acceptable Number</th><th></th><th></th></tr>
<tr><th></th><th>A</th><th>B</th><th>C</th></tr>
<tr><td>D ≤ 0.3</td><td>*</td><td>*</td><td>*</td></tr>
<tr><td>0.3 < D ≤ 0.4</td><td>3</td><td>*</td><td>*</td></tr>
<tr><td>0.4 < D ≤ 0.6</td><td>2</td><td>3</td><td>*</td></tr>
<tr><td>0.6 < D</td><td>0</td><td>0</td><td>*</td></tr>
</table>
*: Disregard
Total defects shall not exceed 3.
</td></tr>
</table>

No.	Parameter	Criteria
3.	The Shape of Dot	(1) Dot Shape (with Dent) 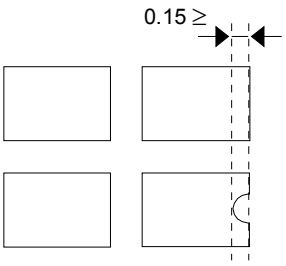 As per the sketch of left hand. (2) Dot Shape (with Projection) 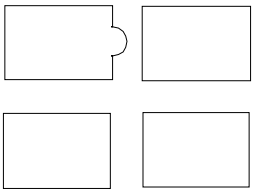 Should not be connected to next dot. (3) Pin Hole 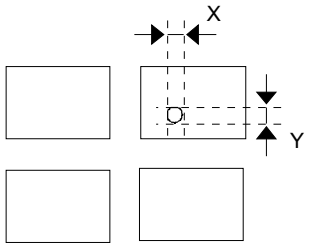 (X + Y) /2 ≤ 0.2mm (Less than 0.1mm is no counted.) (4) Deformation 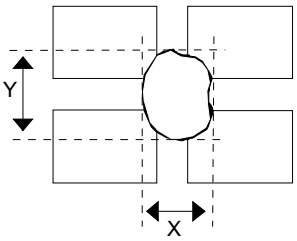 (X + Y) /2 ≤ 0.2mm Total acceptable number: 1/dot, 5/cell (Defect number of (4): 1pc.)
4.	Polarizer Scratches	Not to be conspicuous defects.
5.	Polarizer Dirt's	I f the stains are removed easily from LCDP surface, the module is not defective.
6.	Complex Foreign Substance Defects	Black spots, line shaped foreign substance or air bubbles between glass & polarizer should be 5pcs maximum in total.
7.	Distance between different Foreign Substance defects	D ≤ 0.2: 20mm or more 0.2 < D: 40mm or more

8. Handling and Precautions

The Following precautions will guide you in handling our product correctly.

1. Liquid crystal display devices

   1.1 The liquid crystal display device panel used in the liquid crystal display module is made of plate glass. Avoid any strong mechanical shock. Should the glass break handle it with care.
   1.2 The polarizer adhering to the surface of the LCD is made of a soft material. Guard against scratching it.

2. Care of the liquid crystal display module against static electricity discharge.

   2.1 When working with the module, be sure to ground your body and any electrical equipment you may be using. We strongly recommend the use of anti static mats (made of rubber), to protect work tables against the hazards of electrical shock.
   2.2 Avoid the use of work clothing made of synthetic fibers. We recommend cotton clothing or other conductivity-treated fibers.
   2.3 Slowly and carefully remove the protective film from the LCD module, since this operation can generate static electricity.

3. When the LCD module alone must be stored for long periods of time:

   3.1 Protect the modules from high temperature and humidity.
   3.2 Keep the modules out of direct sunlight or direct exposure to ultra-violet rays.
   3.3 Protect the modules from excessive external forces.

4. Use the module with a power supply that is equipped with an over current protector circuit, since the module is not provided with this protective feature.

5. Do not ingest the LCD fluid itself should it leak out of a damaged LCD module. Should hands or clothing come in contact with LCD fluid, wash immediately with soap.

6. Conductivity is not guaranteed for models that use metal holders where solder connections between the metal holder and the PCB are not used. Please contact us to discuss appropriate ways to assure conductivity.

9. Warranty

This product has been manufactured to your company's specifications as a part for use in your company's general electronic products. It is guaranteed to perform according to delivery specifications. For any other use apart from general electronic equipment, we cannot take responsibility if the product is used in medical devices, nuclear power control equipment, aerospace equipment, fire and security systems, or any other applications in which there is a direct risk to human life and where extremely high levels of reliability are required. If the product is to be used in any of the above applications, we will need to enter into a separate product liability agreement.

1 13-month guarantee starts from the date code.

2 We cannot accept responsibility for any defect, which may arise from additional manufacturing of the product (including disassembly and reassembly), after product delivery.

3 We cannot accept responsibility for any defect, which may arise after the application of strong external force to the product.

4 We cannot accept responsibility for any defect, which may arise due to the application of static electricity after the product has passed your company's acceptance inspection procedures.

5 We cannot accept responsibility for industrial property, which may arise through the use of your product, with exception to those issues relating directly to the structure or method of manufacturing of our product. Microtips-origin longer than one year from Microtips production.

10. Dimensional Outlines

- See the next page……..

REV.	DESCRIPTION	DRAWN	CHECK	APP'D	DATE

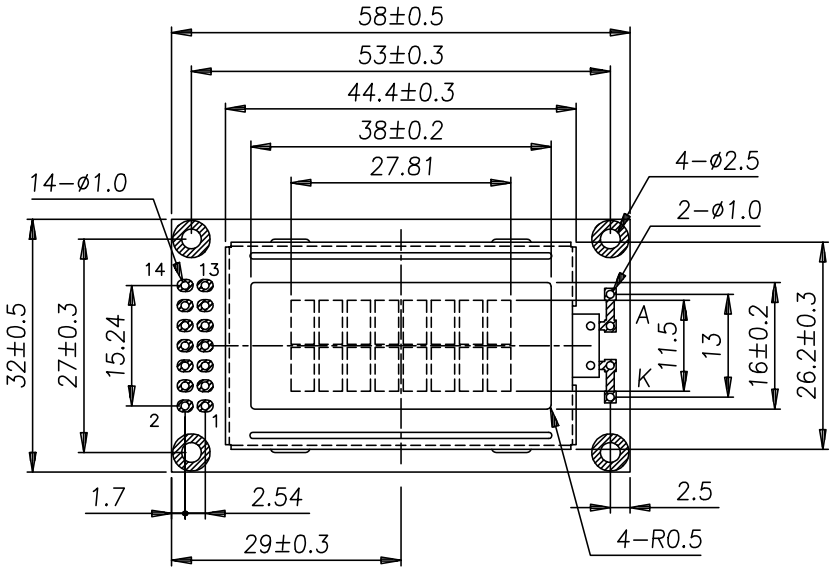

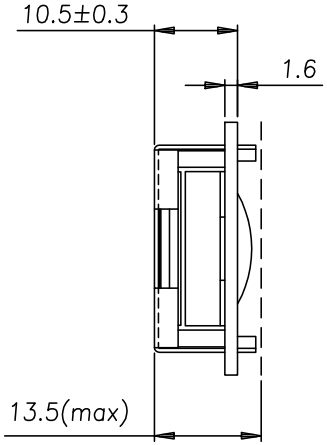

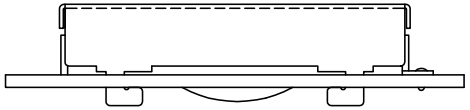

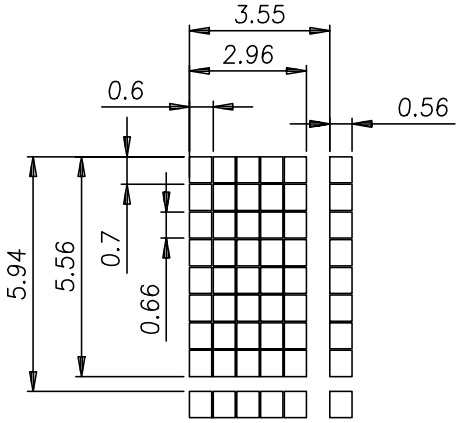

Dots

Pin Function
1. :Vss
2. :Vdd
3. :Vo
4. :RS
5. :R/W
6. :E
7. :DB0
~
14.:DB7

NO.	PART NAME	Q'TY	DATE:	MATERIAL	FINISH
	M−0802XH	1	7−27−99'		

DRAWN	CHECK	APP'D	UNIT: MM	SCALE: 1 / 1	PRODUCT: MTC−0802X(H)
				UNLESS OTHERWISE SPECIFIED TOLERANCE ON FRACTIONS DECIMALS ANGLES 0.10 0.5°	DWG NO.: C00802X0
					FILE: DWG\MTC\C00802X
					SHEET 1 / 1 Rev:

Microtips Techonology

Mouser Electronics

Authorized Distributor

Click to View Pricing, Inventory, Delivery & Lifecycle Information:

Microtips Technology:
NMTC-S0802XFYHSAY-15