Features

- 8-bit Microcontroller Compatible with 8051 Products
- Enhanced 8051 Architecture
  - Single Clock Cycle per Byte Fetch
  - 12 Clock per Machine Cycle Compatibility Mode
  - Up to 20 MIPS Throughput at 20 MHz Clock Frequency
  - Fully Static Operation: 0 Hz to 20 MHz
  - On-chip 2-cycle Hardware Multiplier
  - 16x16 Multiply–Accumulate Unit
  - 256 x 8 Internal RAM
  - On-chip 1152 Bytes Expanded RAM (ERAM)
    - Software Selectable Size (0, 256, 512, 768, 1024 or 1152 Bytes)
  - Dual Data Pointers
  - 4-level Interrupt Priority
- Nonvolatile Program and Data Memory
  - 24KB/32KB of In-System Programmable (ISP) Flash Program Memory
  - 512-byte User Signature Array
  - Endurance: 10,000 Write/Erase Cycles
  - Serial Interface for Program Downloading
  - 2KB Boot ROM Contains Low Level Flash Programming Routines and a Default Serial Bootloader
- Peripheral Features
  - Three 16-bit Enhanced Timer/Counters
  - Seven 8-bit PWM Outputs
  - 16-bit Programmable Counter Array
    - High Speed Output, Compare/Capture
    - Pulse Width Modulation, Watchdog Timer Capabilities
  - Enhanced UART with Automatic Address Recognition and Framing Error Detection
  - Enhanced Master/Slave SPI with Double-buffered Send/Receive
  - Two Wire Interface 400K bit/s
  - Programmable Watchdog Timer with Software Reset
  - 8 General-purpose Interrupt and Keyboard Interface Pins
- Special Microcontroller Features
  - Dual Oscillator Support: Crystal, 32 kHz Crystal, 8 MHz Internal (AT89LP51IC2)
  - Two-wire On-Chip Debug Interface
  - Brown-out Detection and Power-on Reset with Power-off Flag
  - Selectable Polarity External Reset Pin
  - Low Power Idle and Power-down Modes
  - Interrupt Recovery from Power-down Mode
  - 8-bit Clock Prescaler
- I/O and Packages
  - Up to 40 Programmable I/O Lines
  - Green (Pb/Halide-free) PLCC44, VQFP44, QFN44. PDIP40
  - Configurable I/O Modes
    - Quasi-bidirectional (80C51 Style), Input-only (Tristate)
    - Push-pull CMOS Output, Open-drain
- Operating Conditions
  - 2.4V to 5.5V V_{CC} Voltage Range
  - -40° C to 85°C Temperature Range
  - 0 to 20 MHz @ 2.4V–5.5V (Single-cycle)

8-bit Flash Microcontroller with 24K/32K bytes Program Memory

AT89LP51RB2
AT89LP51RC2
AT89LP51IC2
Preliminary

3722A–MICRO–10/11

1. Pin Configurations

1.1 44-lead TQFP/LQFP

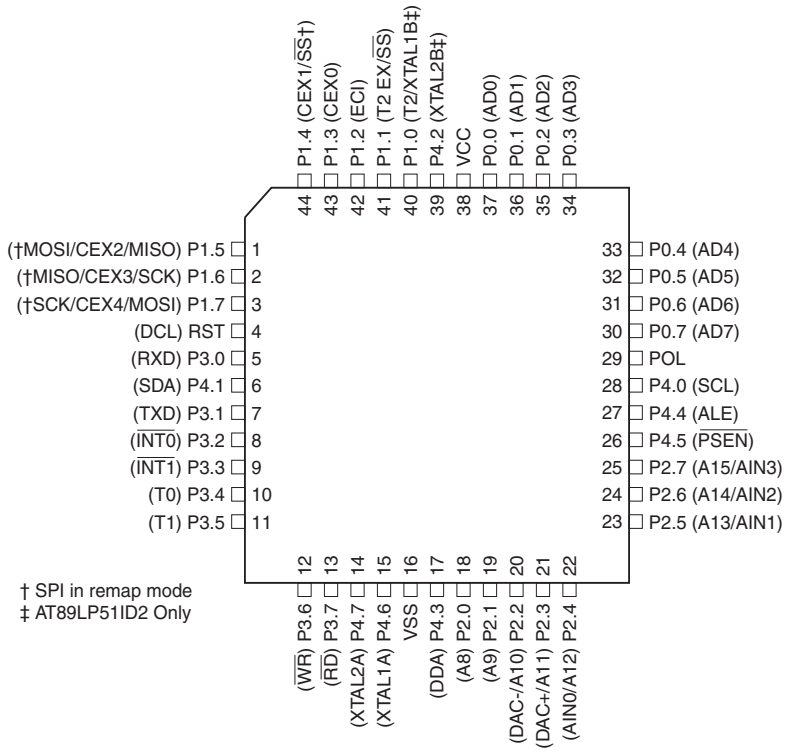

1.2 44-lead PLCC

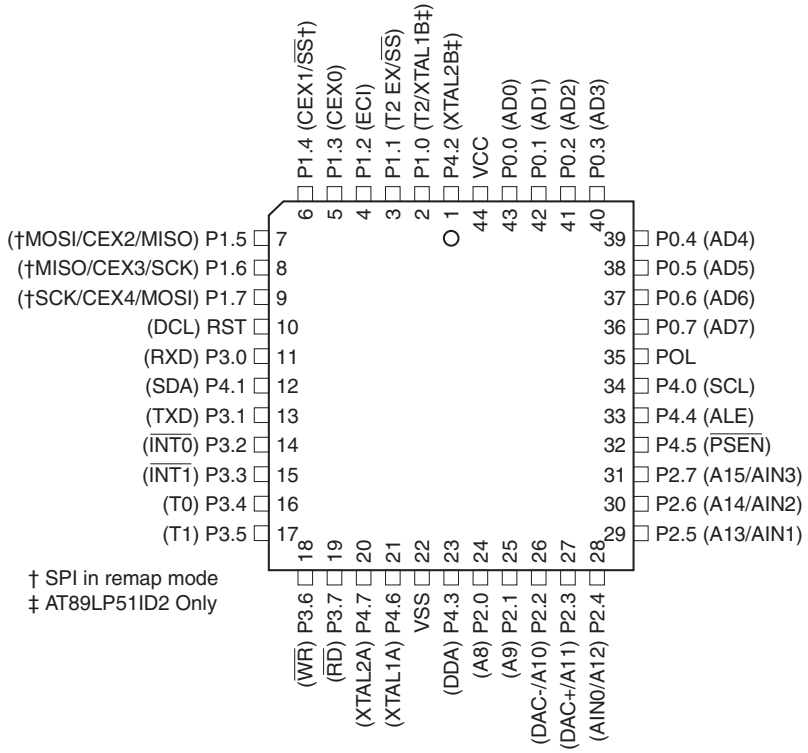

1.3 44-pad VQFN/QFN/MLF

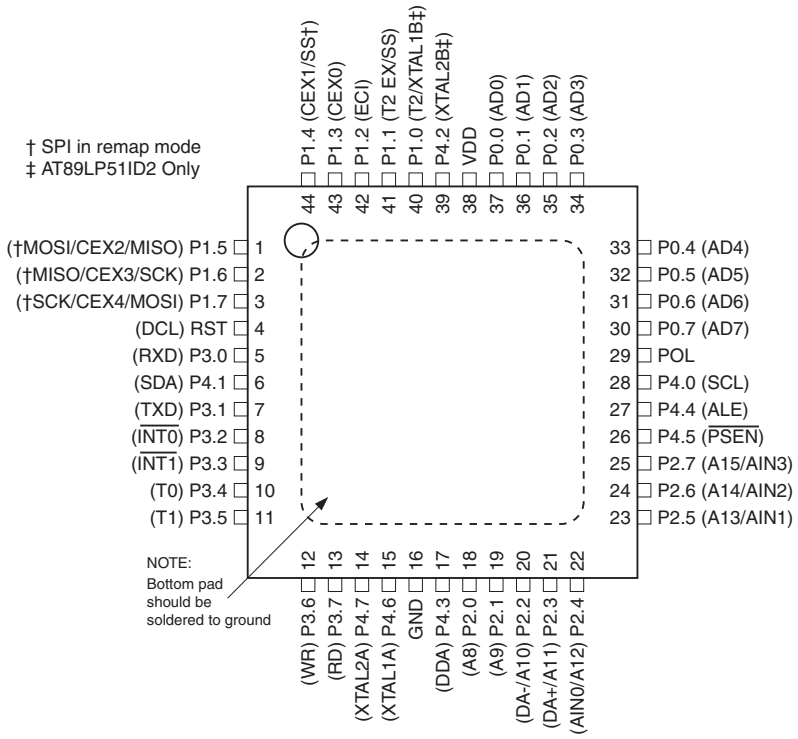

1.4 40-pin PDIP

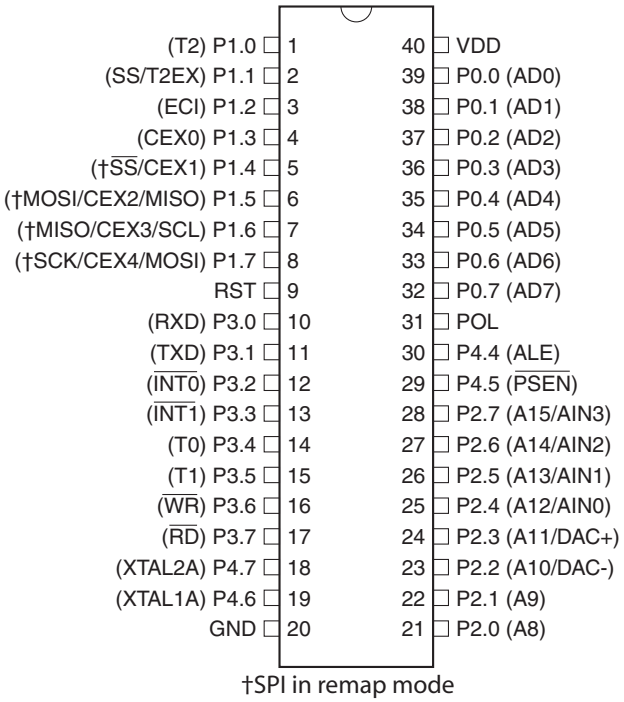

Note: 1. The AT89LP51IC2 is not available in the PDIP package

1.5 Pin Description

Table 1-1. Atmel AT89LP51RB2/RC2/IC2 Pin Description

Pin Number			Symbol	Type	Description
VQFP VQFN	PLCC	PDIP (1)			
1	7	6	P1.5	I/O I/O I/O I/O	**P1.5**: User-configurable I/O Port 1 bit 5. **MISO**: SPI master-in/slave-out. When configured as master, this pin is an input. When configured as slave, this pin is an output. **MOSI**: SPI master-out/slave-in (Remap mode). When configured as master, this pin is an output. When configured as slave, this pin is an input. During In-System Programming, this pin is an input. **CEX2**: Capture/Compare external I/O for PCA module 2.
2	8	7	P1.6	I/O I/O I/O I/O	**P1.6**: User-configurable I/O Port 1 bit 6. **SCK**: SPI Clock. When configured as master, this pin is an output. When configured as slave, this pin is an input. **MISO**: SPI master-in/slave-out (Remap mode). When configured as master, this pin is an input. When configured as slave, this pin is an output. During In-System Programming, this pin is an output. **CEX3**: Capture/Compare external I/O for PCA module 3.
3	9	8	P1.7	I/O I/O I/O I/O	**P1.7**: User-configurable I/O Port 1 bit 7. **MOSI**: SPI master-out/slave-in. When configured as master, this pin is an output. When configured as slave, this pin is an input. **SCK**: SPI Clock (Remap mode). When configured as master, this pin is an output. When configured as slave, this pin is an input. During In-System Programming, this pin is an input. **CEX4**: Capture/Compare external I/O for PCA module 4.
4	10	9	RST	I/O I	**RST**: External Reset input (Reset polarity depends on POL pin. See "External Reset" on page 53.). The RST pin can output a pulse when the internal Watchdog reset or POR is active. **DCL**: Serial Debug Clock input for On-Chip Debug Interface when OCD is enabled.
5	11	10	P3.0	I/O I	**P3.0**: User-configurable I/O Port 3 bit 0. **RXD**: Serial Port Receiver Input.
6	12		P4.1	I/O I/O	**P4.1**: User-configurable I/O Port 4bit 1. **SDA**: TWI bidirectional Serial Data line.
7	13	11	P3.1	I/O O	**P3.1**: User-configurable I/O Port 3 bit 1. **TXD**: Serial Port Transmitter Output.
8	14	12	P3.2	I/O I	**P3.2**: User-configurable I/O Port 3 bit 2. **$\overline{\text{INT0}}$**: External Interrupt 0 Input or Timer 0 Gate Input.
9	15	13	P3.3	I/O I	**P3.3**: User-configurable I/O Port 3 bit 3. **$\overline{\text{INT1}}$**: External Interrupt 1 Input or Timer 1 Gate Input
10	16	14	P3.4	I/O I/O	**P3.4**: User-configurable I/O Port 3 bit 4. **T1**: Timer/Counter 0 External input or output.
11	17	15	P3.5	I/O I/O	**P3.5**: User-configurable I/O Port 3 bit 5. **T1**: Timer/Counter 1 External input or output.
12	18	16	P3.6	I/O O	**P3.6**: User-configurable I/O Port 3 bit 6. **$\overline{\text{WR}}$**: External memory interface Write Strobe (active-low).
13	19	17	P3.7	I/O O	**P3.7**: User-configurable I/O Port 3 bit 7. **$\overline{\text{RD}}$**: External memory interface Read Strobe (active-low).
14	20	18	P4.7	I/O O	**P4.7**: User-configurable I/O Port 4 bit 7. **XTAL2A**: Output from inverting oscillator amplifier A. It may be used as a port pin if the internal RC oscillator or external clock is selected as the clock source A.
15	21	19	P4.6	I/O I	**P4.6**: User-configurable I/O Port 4 bit 6. **XTAL1A**: Input to the inverting oscillator amplifier A and internal clock generation circuits. It may be used as a port pin if the internal RC oscillator is selected as the clock source A.

Table 1-1. Atmel AT89LP51RB2/RC2/IC2 Pin Description

Pin Number					
VQFP VQFN	PLCC	PDIP (1)	Symbol	Type	Description
16	22	20	GND	I	Ground
17	23		P4.3	I/O I/O	**P4.3**: User-configurable I/O Port 4bit 3. **DDA**: Bidirectional Debug Data line for the On-Chip Debug Interface when OCD is enabled.
18	24	21	P2.0	I/O O	**P2.0**: User-configurable I/O Port 2 bit 0. **A8**: External memory interface Address bit 8.
19	25	22	P2.1	I/O O	**P2.1**: User-configurable I/O Port 2 bit 1. **A9**: External memory interface Address bit 9.
20	26	23	P2.1	I/O O O	**P2.2**: User-configurable I/O Port 2 bit 2. **DA-**: DAC negative differential output. **A10**: External memory interface Address bit 10.
21	27	24	P2.3	I/O O O	**P2.3**: User-configurable I/O Port 2 bit 3. **DA+-**: DAC positive differential output. **A11**: External memory interface Address bit 11.
22	28	25	P2.4	I/O I O	**P2.4**: User-configurable I/O Port 2 bit 5. **AIN0**: Analog Comparator Input 0. **A12**: External memory interface Address bit 12.
23	29	26	P2.5	I/O I O	**P2.5**: User-configurable I/O Port 2 bit 5. **AIN1**: Analog Comparator Input 1. **A13**: External memory interface Address bit 13.
24	30	27	P2.6	I/O I O	**P2.6**: User-configurable I/O Port 2 bit 6. **AIN2**: Analog Comparator Input 2. **A14**: External memory interface Address bit 14.
25	31	28	P2.7	I/O I O	**P2.7**: User-configurable I/O Port 2 bit 7. **AIN3**: Analog Comparator Input 3. **A15**: External memory interface Address bit 15.
26	32	29	P4.5	I/O O	**P4.5**: User-configurable I/O Port 4 bit 5. **$\overline{\text{PSEN}}$**: External memory interface Program Store Enable (active-low).
27	33	30	P4.4	I/O I/O	**P4.4**: User-configurable I/O Port 4 bit 4. **ALE**: External memory interface Address Latch Enable.
28	34		P4.0	I/O	**P4.0**: User-configurable I/O Port 4 bit 0. **SCL**: TWI Serial Clock line. This line is an output in mater mode and an input in slave mode.
29	35	31	POL	I	**POL**: Reset polarity (See “External Reset” on page 53.)
30	36	32	P0.7	I/O I/O	**P0.7**: User-configurable I/O Port 0 bit 7. **AD7**: External memory interface Address/Data bit 7.
31	37	33	P0.6	I/O I/O I	**P0.6**: User-configurable I/O Port 0 bit 6. **AD6**: External memory interface Address/Data bit 6. **ADC6**: ADC analog input 6.
32	38	34	P0.5	I/O I/O I	**P0.5**: User-configurable I/O Port 0 bit 5. **AD5**: External memory interface Address/Data bit 5. **ADC5**: ADC analog input 5.
33	39	35	P0.4	I/O I/O I	**P0.4**: User-configurable I/O Port 0 bit 4. **AD4**: External memory interface Address/Data bit 4. **ADC4**: ADC analog input 4.
34	40	36	P0.3	I/O I/O I	**P0.3**: User-configurable I/O Port 0 bit 3. **AD3**: External memory interface Address/Data bit 3. **ADC3**: ADC analog input 3.

Table 1-1. Atmel AT89LP51RB2/RC2/IC2 Pin Description

Pin Number			Symbol	Type	Description
VQFP VQFN	PLCC	PDIP (1)			
35	41	37	P0.2	I/O I/O I	**P0.2**: User-configurable I/O Port 0 bit 2. **AD2**: External memory interface Address/Data bit 2. **ADC2**: ADC analog input 2.
36	42	38	P0.1	I/O I/O I	**P0.1**: User-configurable I/O Port 0 bit 1. **AD1**: External memory interface Address/Data bit 1. **ADC1**: ADC analog input 1.
37	43	39	P0.0	I/O I/O I	**P0.0**: User-configurable I/O Port 0 bit 0. **AD0**: External memory interface Address/Data bit 0. **ADC0**: ADC analog input 0.
38	44	40	VDD	I	Supply Voltage
39	1		P4.2	I/O	**P4.2**: User-configurable I/O Port 4bit 2. **XTAL2B**: Output from low-frequency inverting oscillator amplifier B (AT89LP51IC2 only). It may be used as a port pin if the internal RC oscillator or external clock is selected as the clock source B.
40	2	1	P1.0	I/O I/O	**P1.0**: User-configurable I/O Port 1 bit 0. **T2**: Timer 2 External Input or Clock Output. **XTAL1B**: Input to the low-frequency inverting oscillator amplifier B and internal clock generation circuits. It may be used as a port pin if the internal RC oscillator is selected as the clock source B.
41	3	2	P1.1	I/O I I	**P1.1**: User-configurable I/O Port 1 bit 1. **T2EX**: Timer 2 External Capture/Reload Input. **$\overline{SS}$**: SPI Slave-Select.
42	4	3	P1.2	I/O	**P1.2**: User-configurable I/O Port 1 bit 2.
43	5	4	P1.3	I/O I/O	**P1.3**: User-configurable I/O Port 1 bit 3. **CEX0**: Capture/Compare external I/O for PCA module 0.
44	6	5	P1.4	I/O I I/O	**P1.4**: User-configurable I/O Port 1 bit 4. **$\overline{SS}$**: SPI Slave-Select (Remap Mode). This pin is an input for In-System Programming **CEX1**: Capture/Compare external I/O for PCA module 1.

Note: 1. The AT89LP51IC2 is not available in the PDIP package

2. Overview

The Atmel® AT89LP51RB2/RC2/IC2 is a low-power, high-performance CMOS 8-bit 8051 microcontroller with 24/32 KB of In-System Programmable Flash program memory. The devices are manufactured using Atmel's high-density nonvolatile memory technology and are compatible with the industry-standard 80C51 instruction set.

The AT89LP51RB2/RC2/IC2 is built around an enhanced CPU core that can fetch a single byte from memory every clock cycle. In the classic 8051 architecture, each fetch requires 6 clock cycles, forcing instructions to execute in 12, 24 or 48 clock cycles. In the AT89LP51RB2/RC2/IC2 CPU, standard instructions need only one to four clock cycles providing six to twelve times more throughput than the standard 8051. Seventy percent of instructions need only as many clock cycles as they have bytes to execute, and most of the remaining instructions require only one additional clock. The enhanced CPU core is capable of 20 MIPS throughput whereas the classic 8051 CPU can deliver only 4 MIPS at the same current consumption. Conversely, at the same throughput as the classic 8051, the new CPU core runs at a much lower speed and thereby greatly reducing power consumption and EMI. The

AT89LP51RB2/RC2/IC2 also includes a compatibility mode that will enable classic 12 clock per machine cycle operation for true timing compatibility with the Atmel AT89C51RB2/RC2/IC2.

The AT89LP51RB2/RC2/IC2 retains all of the standard features of the AT89C51RB2/RC2/IC2, including: 24KB/32KB of In-System Programmable Flash program memory, 256 bytes of RAM, 1152 bytes of expanded RAM, up to 40 I/O lines, three 16-bit timer/counters, a Programmable Counter Array, a programmable hardware watchdog timer, a keyboard interface, a full-duplex enhanced serial port, a serial peripheral interface (SPI), on-chip crystal oscillator, and a four-level, ten-vector interrupt system. A block diagram is shown in Figure 2-1.

In addition, the Atmel® AT89LP51RB2/RC2/IC2 provides a Two-Wire Interface (TWI) for up to 400KB/s serial transfer; a 10-bit, 8-channel Analog-to-Digital Converter (ADC) with temperature sensor and digital-to-analog (DAC) mode; two analog comparators; and an 8MHz internal oscillator.

Some standard features on the AT89LP51RB2/RC2/IC2 are enhanced with new modes or operations. Mode 0 of Timer 0 or Timer 1 acts as a variable 9–16 bit timer/counter and Mode 1 acts as a 16-bit auto-reload timer/counter. In addition, each timer/counter may independently drive an 8-bit precision pulse width modulation output. Mode 0 (synchronous mode) of the serial port allows flexibility in the phase/polarity relationship between clock and data.

The I/O ports of the AT89LP51RB2/RC2/IC2 can be independently configured in one of four operating modes. In quasi-bidirectional mode, the ports operate as in the classic 8051. In input-only mode, the ports are tristated. Push-pull output mode provides full CMOS drivers and open-drain mode provides just a pull-down. Unlike other 8051s, this allows Port 0 to operate with on-chip pull-ups if desired.

The AT89LP51RB2/RC2/IC2 includes an On-Chip Debug (OCD) interface that allows read-modify-write capabilities of the system state and program flow control, and programming of the internal memories. The on-chip Flash may also be programmed through the UART-based bootloader or the SPI-based In-System programming interface (ISP).

The TWI and OCD features are not available on the PDIP package. The AT89LP51IC2 is also not available in the PDIP.

The features of the AT89LP51RB2/RC2/IC2 make it a powerful choice for applications that need pulse width modulation, high speed I/O, and counting capabilities such as alarms, motor control, corded phones, and smart card readers.

2.1 Block Diagram

Figure 2-1. Atmel AT89LP51RB2/RC2/IC2 Block Diagram

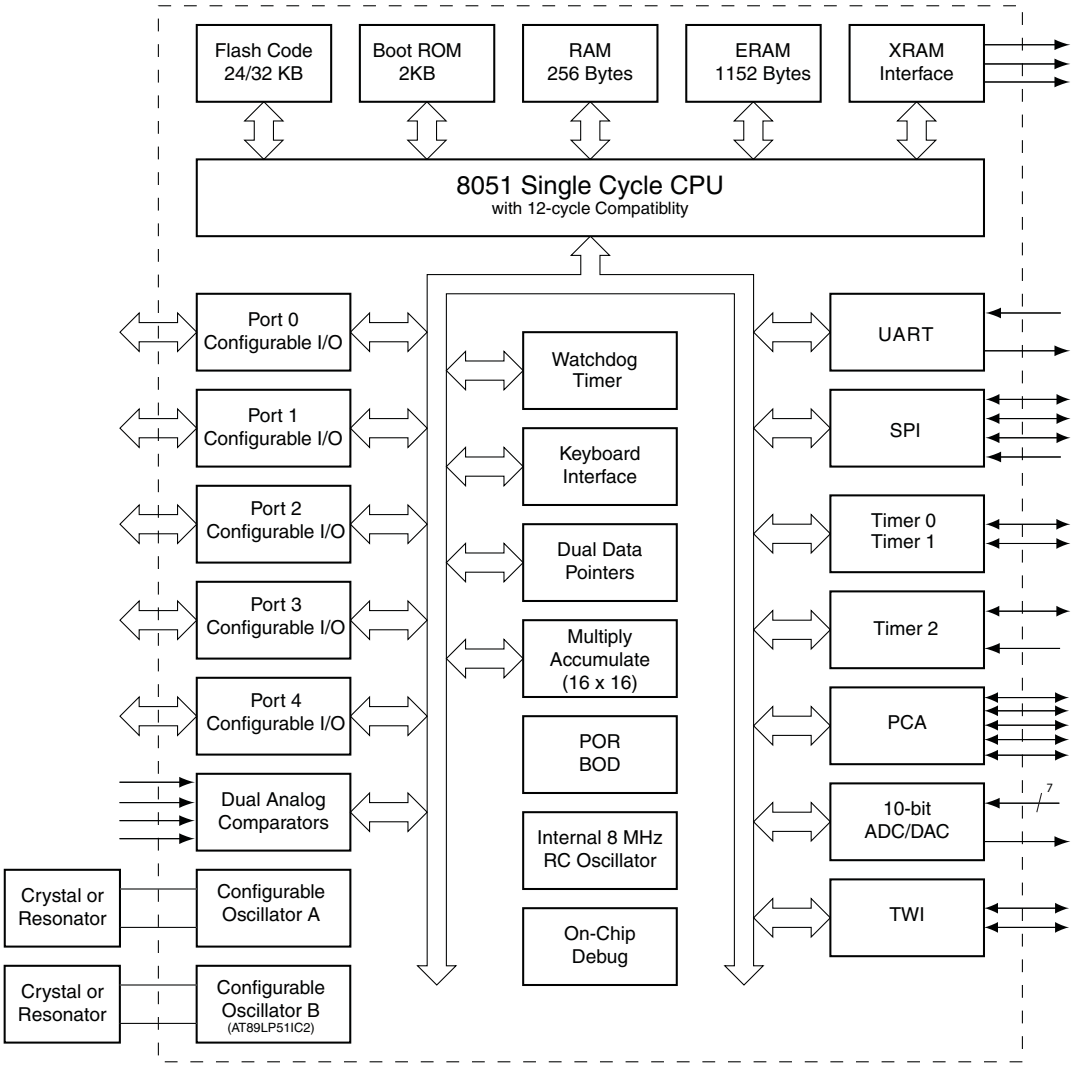

2.2 System Configuration

The AT89LP51RB2/RC2/IC2 supports several system configuration options. Nonvolatile options are set through user fuses that must be programmed through the flash programming interface. Volatile options are controlled by software through individual bits of special function registers (SFRs). The AT89LP51RB2/RC2/IC2 must be properly configured before correct operation can occur.

2.2.1 Fuse Options

Table 2-1 lists the fusible options for the AT89LP51RB2/RC2/IC2. These options maintain their state even when the device is powered off. Some may be changed through the Flash API but others can only be changed with an external device programmer. For more information, see Section 24.2 “User Configuration Fuses” on page 188.

Table 2-1. User Configuration Fuses

Fuse Name	Description
Clock Source A	Selects between the High Speed Crystal Oscillator, Low Power Crystal Oscillator, External Clock on XTAL1A or Internal RC Oscillator for the source of the system clock when oscillator A is selected.
Clock Source B	Selects between the 32 kHz Crystal Oscillator, External Clock on XTAL1B or Internal RC Oscillator for the source of the system clock when oscillator B is selected (AT89LP51IC2 Only).
Oscillator Select	Selects whether oscillator A or B is enabled to boot the device. (AT89LP51IC2 Only)
X2 Mode	Selects the default state of whether the clock source is divided by two (X1) or not (X2) to generate the system clock.
Start-up Time	Selects time-out delay for the POR/BOD/PWD wake-up period.
Compatibility Mode	Configures the CPU in 12-clock compatibility or single-cycle fast execution mode.
XRAM Configuration	Configures if access to on-chip memories that are mapped to the external data memory address space is enabled/disabled by default.
Bootloader Jump Bit	Enables or disables the on-ship bootloader.
On-Chip Debug Enable	Enables or disables On-Chip Debug. OCD must be enabled prior to using an in-circuit debugger with the device.
In-System Programming Enable	Enables or disables In-System Programming.
User Signature Programming Enable	Enables or disables programming of User Signature array.
Default Port State	Configures the default port state as input-only mode (tristated) or quasi-bidirectional mode (weakly pulled high).
Low Power Mode	Enables or disables power reduction features for lower system frequencies.

2.2.2 Software Options

Table 2-2 lists some important software configuration bits that affect operation at the system level. These can be changed by the application software but are set to their default values upon any reset. Most peripherals also have multiple configuration bits that are not listed here.

Table 2-2. Important Software Configuration Bits

Bit(s)	SFR Location	Description
PxM0.y PxM1.y	P0M0, P0M1, P1M0, P1M1, P2M0, P2M1, P3M0, P3M1, P4M0, P4M1	Configures the I/O mode of Port x Pin y to be one of input-only, quasi-bidirectional, push-pull output or open-drain. The default state is controlled by the Default Port State fuse above
CKRL	CKRL	Selects the division ratio between the oscillator and the system clock
TPS_{3-0}	CLKREG.7-4	Selects the division ratio between the system clock and the timers
ALES	AUXR.0	Enables/disables toggling of ALE
EXRAM	AUXR.1	Enables/disables access to on-chip memories that are mapped to the external data memory address space
WS_{1-0}	AUXR.6-5	Selects the number of wait states when accessing external data memory
XSTK	AUXR1.4	Configures the hardware stack to be in RAM or extra RAM
ENBOOT	AUXR1.5	Enables/disables access to the on-chip Flash API

2.3 Comparison to the Atmel AT89C51RB2/RC2/IC2

The Atmel® AT89LP51RB2/RC2/IC2 is part of a family of devices with enhanced features that are fully binary compatible with the 8051 instruction set. The AT89LP51RB2/RC2/IC2 has two modes of operations, Compatibility mode and Fast mode. In Compatibility mode the instruction timing, peripheral behavior, SFR addresses, bit assignments and pin functions are identical to the existing Atmel AT89C51RB2/RC2/IC2 product. Additional enhancements are transparent to the user and can be used if desired. Fast mode allows greater performance, but with some differences in behavior. The major enhancements from the AT89C51RB2/RC2/IC2 are outlined in the following paragraphs and may be useful to users migrating to the AT89LP51RB2/RC2/IC2 from older devices. A summary of the differences between Compatibility and Fast modes is given in Table 2-3 on page 12. See also the Application note "Migrating from AT89C51RB2/RC2/IC2 to AT89LP51RB2/RC2/IC2."

2.3.1 Instruction Execution

In Compatibility mode the Atmel® AT89LP51RB2/RC2/IC2 CPU uses the six-state machine cycle of the standard 8051 where instruction bytes are fetched every three system clock cycles. Execution times in this mode are identical to the Atmel AT89C51RB2/RC2/IC2. For greater performance the user can enable Fast mode by disabling the Compatibility fuse. In Fast mode the CPU fetches one code byte from memory every clock cycle instead of every three clock cycles. This greatly increases the throughput of the CPU. Each standard instruction executes in only one to four clock cycles. See "Instruction Set Summary" on page 173 for more details. Any software delay loops or instruction-based timing operations may need to be retuned to achieve the desired results in Fast mode.

2.3.2 System Clock

The system clock source is not limited to a crystal or external clock. The system clock source is selectable between the crystal oscillator, an externally driven clock and an internal 8.0MHz RC oscillator for AT89LP51RB2/RC2 and clock source A of AT89LP51IC2. Clock source B of AT89LP51IC2 is not limited to a 32 kHz crystal. The clock source B is selectable between the 32 kHz crystal oscillator, an externally driven clock and an internal 8.0MHz RC oscillator. Unlike AT89C51IC2, the X2 and CKRL features will also affect the OSCB source.

By default in Compatibility mode the system clock frequency is divided by 2 from the externally supplied XTAL1 frequency for compatibility with standard 8051s (12 clocks per machine cycle). The System Clock Divider can scale the system clock versus the oscillator source (See Section 6.8 on page 47). The divide-by-2 can be disabled to operate in X2 mode (6 clocks per machine cycle) or the clock may be further divided to reduce the operating frequency. In Fast mode the clock divider defaults to divide by 1.

2.3.3 Reset

The RST pin of the AT89LP51RB2/RC2/IC2 has selectable polarity using the POL pin (formerly $\overline{EA}$). When POL is high the RST pin is active high with a pull-down resistor and when POL is low the RST pin is active low with a pull-up resistor. For existing AT89C51RB2/RC2/IC2 sockets where $\overline{EA}$ is tied to VDD, replacing AT89C51RB2/RC2/IC2 with AT89LP51RB2/RC2/IC2 will maintain the active high reset. Note that forcing external execution by tying $\overline{EA}$ low is not supported.

The AT89LP51RB2/RC2/IC2 includes an on-chip Power-On Reset and Brown-out Detector circuit that ensures that the device is reset from system power up. In most cases a RC startup

circuit is not required on the RST pin, reducing system cost, and the RST pin may be left unconnected if a board-level reset is not present.

2.3.4 Timer/Counters

A common prescaler is available to divide the time base for Timer 0, Timer 1, Timer 2 and the WDT. The TPS_{3-0} bits in the CLKREG SFR control the prescaler (Table 6-8 on page 47). In Compatibility mode TPS_{3-0} defaults to 0101B, which causes the timers to count once every machine cycle. The counting rate can be adjusted linearly from the system clock rate to 1/16 of the system clock rate by changing TPS_{3-0}. In Fast mode TPS_{3-0} defaults to 0000B, or the system clock rate. TPS does not affect Timer 2 in Clock Out or Baud Generator modes.

In Compatibility mode the sampling of the external Timer/Counter pins: T0, T1, T2 and T2EX; and the external interrupt pins, $\overline{INT0}$ and $\overline{INT1}$, is also controlled by the prescaler. In Fast mode these pins are always sampled at the system clock rate.

Both Timer 0 and Timer 1 can toggle their respective counter pins, T0 and T1, when they overflow by setting the output enable bits in TCONB.

2.3.5 Interrupt Handling

Fast mode allows for faster interrupt response due to the shorter instruction execution times.

2.3.6 Keyboard Interface

The AT89LP51RB2/RC2/IC2 does not clear the keyboard flag register (KBF) after a read. Each bit must be cleared in software. This allows the interrupt to be generate once per flag when multiple flags are set, if desired. To mimic the old behavior the service routine must clear the whole register.

The keyboard can also support general edge-triggered interrupts with the addition of the KBMOD register.

2.3.7 Serial Port

The timer prescaler increases the range of achievable baud rates when using Timer 1 to generate the baud rate in UART Modes 1 or 3, including an increase in the maximum baud rate available in Compatibility mode. Additional features include automatic address recognition and framing error detection.

The shift register mode (Mode 0) has been enhanced with more control of the polarity, phase and frequency of the clock and full-duplex operation. This allows emulation of master serial peripheral (SPI) and two-wire (TWI) interfaces.

2.3.8 I/O Ports

The P0, P1, P2 and P3 I/O ports of the AT89LP51RB2/RC2/IC2 may be configured in four different modes. The default setting depends on the Tristate-Port User Fuse. When the fuse is set all the I/O ports revert to input-only (tristated) mode at power-up or reset. When the fuse is not active, ports P1, P2 and P3 start in quasi-bidirectional mode and P0 starts in open-drain mode. P4 always operates in quasi-bidirectional mode. P0 can be configured to have internal pull-ups by placing it in quasi-bidirectional or output modes. This can reduce system cost by removing the need for external pull-ups on Port 0.

The P4.4–P4.7 pins are additional I/Os that replace the normally dedicated ALE, PSEN, XTAL1 and XTAL2 pins of the AT89C51RB2/RC2/IC2. These pins can be used as additional I/Os depending on the configuration of the clock and external memory.

2.3.9 Security

The AT89LP51RB2/RC2/IC2 does not support the external access pin ($\overline{EA}$). Therefore it is not possible to execute from external program memory in address range 0000H–1FFFH. When the third Lockbit is enabled (Lock Mode 4) external program execution is disabled for all addresses above 1FFFH. This differs from AT89C51RB2/RC2/IC2 where Lock Mode 4 prevents $\overline{EA}$ from being sampled low, but may still allow external execution at addresses outside the 8K internal space.

2.3.10 Programming

The AT89LP51RB2/RC2/IC2 supports a richer command set for In-System Programming (ISP). Existing AT89C51RB2/RC2/IC2 programmers should be able to program the AT89LP51RB2/RC2/IC2 in byte mode. In page mode the AT89LP51RB2/RC2/IC2 only supports programming of a half-page of 64 bytes and therefore requires an extra address byte as compared to AT89C51RB2/RC2/IC2. Furthermore the device signature is located at addresses 0000H, 0001H and 0003H instead of 0000H, 0100H and 0200H.

Table 2-3. Compatibility Mode versus Fast Mode Summary

Feature	Compatibility	Fast
Instruction Fetch in System Clocks	3	1
Instruction Execution Time in System Clocks	6, 12, 18 or 24	1, 2, 3, 4 or 5
Default System Clock Divisor	2	1
Default Timer Prescaler Divisor	6	1
Pin Sampling Rate ($\overline{INT0}$, $\overline{INT1}$, T0, T1, T2, T2EX)	Prescaler Rate	System Clock
Minimum RST input pulse in System Clocks	12	2

3. Memory Organization

The AT89LP51RB2/RC2/IC2 uses a Harvard Architecture with separate address spaces for program and data memory. The program memory has a regular linear address space with support for 64K bytes of directly addressable application code. The data memory has 256 bytes of internal RAM and 128 bytes of Special Function Register I/O space. The AT89LP51RB2/RC2/IC2 supports up to 64K bytes of external data memory, with portions of the external data memory space implemented on chip as nonvolatile Flash data memory. External program memory is supported for addresses above 32K in some configurations. The memory address spaces of the AT89LP51RB2/RC2/IC2 are listed in Table 3-1.

Table 3-1. AT89LP51RB2/RC2/IC2 Memory Address Spaces

Name	Description	Range
DATA	Directly addressable internal RAM	00H–7FH
IDATA	Indirectly addressable internal RAM and stack space	00H–FFH
SFR	Directly addressable I/O register space	80H–FFH
EDATA	On-chip Extra RAM and extended stack space	0000H–03FFH[1]
XDATA	External data memory	0000H–FFFFH
CODE	On-chip nonvolatile Flash program memory (AT89LP51RB2)	0000H–5FFFH
	On-chip nonvolatile Flash program memory (AT89LP51xC2)	0000H–7FFFH
XCODE	External program memory (AT89LP51RB2)	6000H–FFFFH
	External program memory (AT89LP51xC2)	8000H–FFFFH
SIG	On-chip nonvolatile Flash signature array	0000H–01FFH
BOOT	On-chip Bootloader ROM and Flash API	F800H–FFFFH

Note: 1. The size of the EDATA space is configurable with the XRS bits in AUXR.

3.1 Program Memory

The AT89LP51RB2/RC2/IC2 contains 24K/32K bytes of on-chip In-System Programmable Flash memory for program storage, plus support for up to 40K/32K bytes of external program memory. The Flash memory has an endurance of at least 10,000 write/erase cycles and a minimum data retention time of 10 years. The reset and interrupt vectors are located within the first 83 bytes of program memory (refer to Table 9-1 on page 59). Constant tables can be allocated within the entire 64K program memory address space for access by the MOVC instruction. A map of the AT89LP51RB2/RC2/IC2 program memory is shown in Figure 3-1. See Section 24. “Flash Memory Programming” on page 185 for more information on programming the flash memory.

Figure 3-1. Program Memory Map

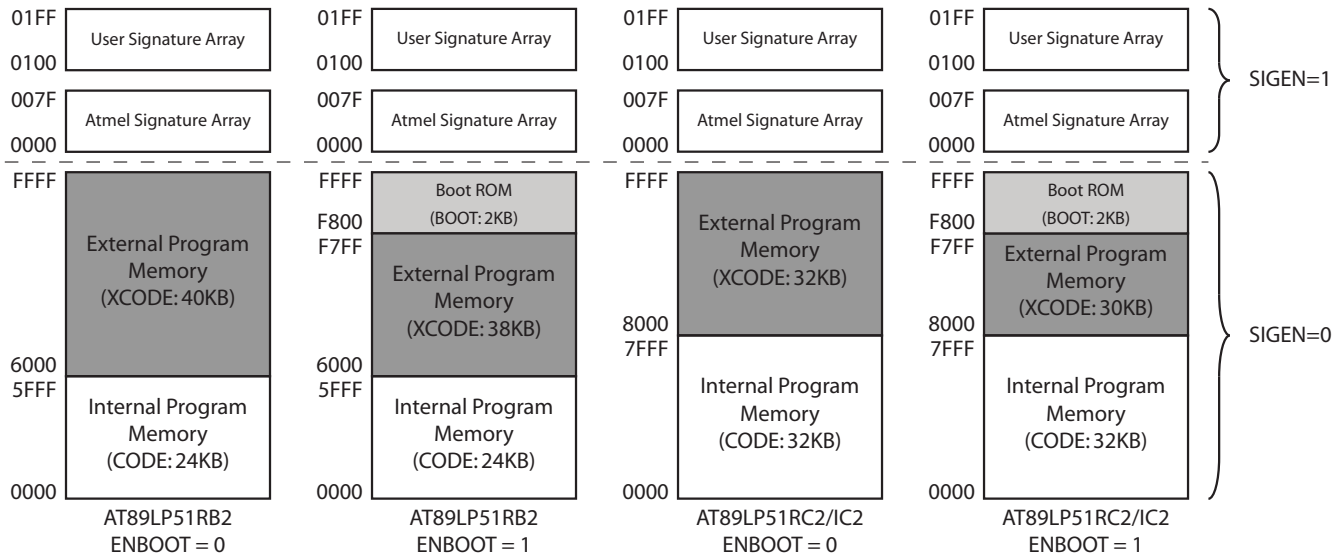

3.1.1 External Program Memory

The AT89LP51RB2/RC2/IC2 implements 24/32/32 KB of the program memory space internally. The AT89LP51RB2/RC2/IC2 does not support forcing external execution using the EA pin; however it does allow for up to 40/32/32 KB of external program memory to be mapped into the upper portions of the address space. For AT89LP51RB2 addresses 6000H–FFFFH are mapped to external program memory. For AT89LP51RC2/IC2 addresses 8000H–FFFFH are mapped to external program memory.

The AT89LP51RB2/RC2/IC2 uses the standard 8051 external program memory interface with the upper address on Port 2, the lower address and data in/out multiplexed on Port 0, and the ALE and $\overline{\text{PSEN}}$ strobes. Program memory addresses are always 16-bits wide. External program execution sacrifices two full 8-bit ports, P0 and P2, to the function of addressing the program memory.

Figure 3-2 shows a hardware configuration for accessing up to 64K bytes of external ROM using a 16-bit linear address. Port 0 serves as a multiplexed address/data bus to the ROM. The Address Latch Enable strobe (ALE) is used to latch the lower address byte into an external register so that Port 0 can be freed for data input/output. Port 2 provides the upper address byte throughout the operation. $\overline{\text{PSEN}}$ strobes the external memory.

Figure 3-3 shows the timing of the external program memory interface. ALE is emitted at a constant rate of 1/3 of the system clock with a 1/3 duty cycle. $\overline{\text{PSEN}}$ is emitted at a similar rate, but with 50% duty cycle. The new address changes in the middle of the ALE pulse for latching on the falling edge and is tristated at the falling edge of $\overline{\text{PSEN}}$. The instruction data is sampled from P0 and latched internally during the high phase of the clock prior to the rising edge of $\overline{\text{PSEN}}$. This timing applies to both Compatibility and Fast modes. In Compatibility mode there is no difference in instruction timing between internal and external execution.

Figure 3-2. Executing from External Program Memory

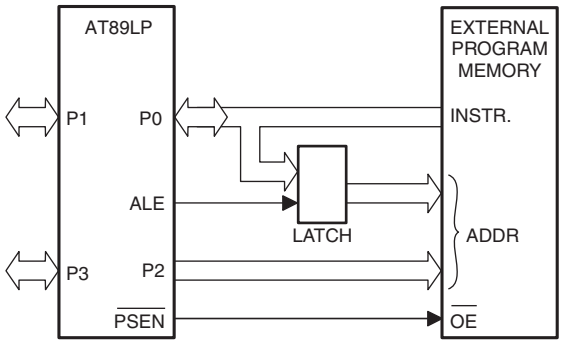

Figure 3-3. External Program Memory Fetches

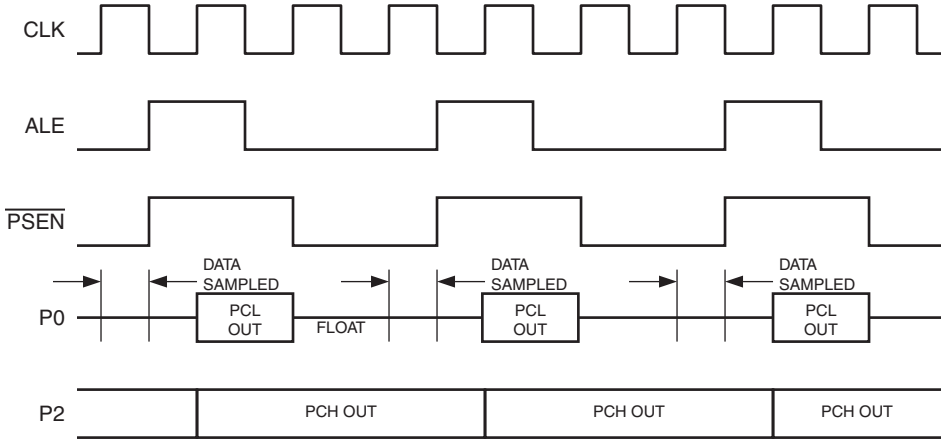

In order for Fast mode to fetch externally, two wait states must be inserted for every clock cycle, increasing the instruction execution time by a factor of 3. However, due to other optimizations, external Fast mode instructions may still be 1/4 to 1/2 faster than their Compatibility mode equivalents. Note that if ALE is allowed to toggle in Fast mode, there is a possibility that when the CPU jumps from internal to external execution a short pulse may occur on ALE as shown in Figure 3-4. The setup time from the address to the falling edge of ALE remains the same. However, this behavior can be avoided by setting the DISALE bit prior to any jump above the 8K border.

Figure 3-4. Internal/External Program Memory Boundary (Fast Mode)

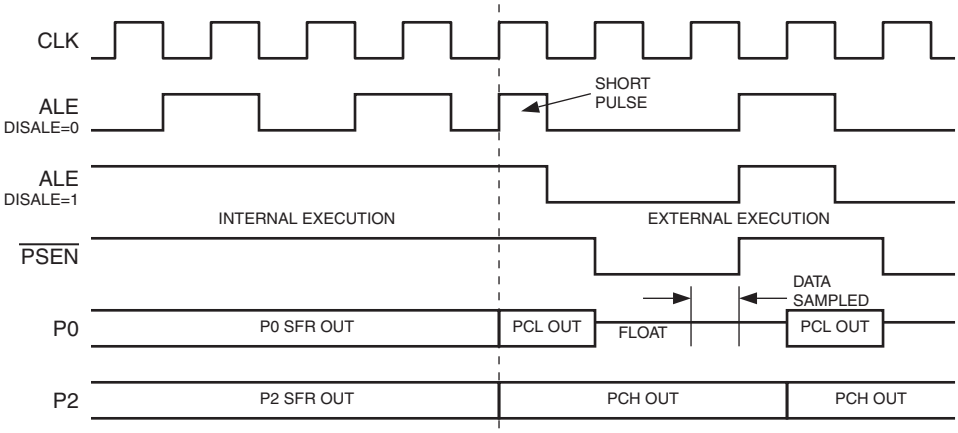

3.1.2 SIG

In addition to the 24K/32K code space, the AT89LP51RB2/RC2/IC2 also supports a 512-byte User Signature Array and a 128-byte Atmel Signature Array that are accessible by the CPU. The Atmel Signature Array is initialized with the Device ID in the factory. The User Signature Array is available for user identification codes or constant parameter data. Data stored in the signature array is not secure. Security bits will disable writes to the array; however, reads by an external device programmer are always allowed. The signatures can be accessed with the Flash API functions or low-level IAP interface. See Section 24.4 “In-Application Programming (IAP)” on page 190 for more information.

3.2 Internal Data Memory

The AT89LP51RB2/RC2/IC2 contains 256 bytes of general SRAM data memory plus 128 bytes of I/O memory mapped into a single 8-bit address space. Access to the internal data memory does not require any configuration. The internal data memory has three address spaces: DATA, IDATA and SFR; as shown in Figure 3-5. Some portions of external data memory are also implemented internally. See “External Data Memory” below for more information.

Figure 3-5. Internal Data Memory Map

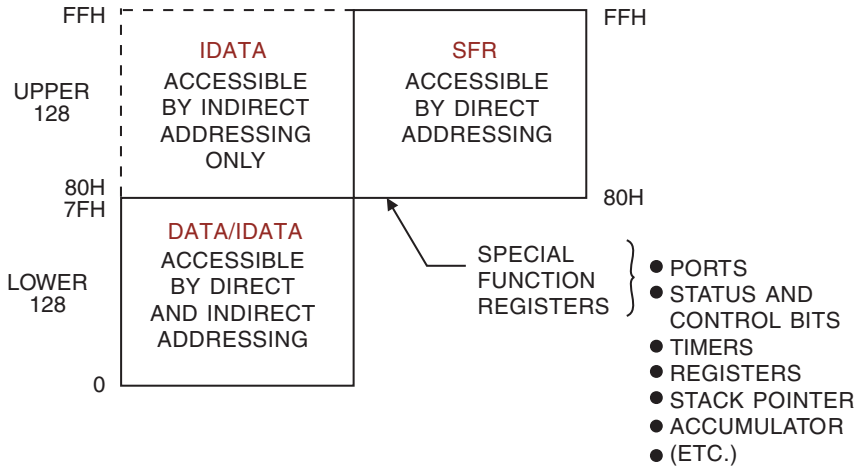

3.2.1 DATA

The first 128 bytes of RAM are directly addressable by an 8-bit address (00H–7FH) included in the instruction. The lowest 32 bytes of DATA memory are grouped into 4 banks of 8 registers each. The RS0 and RS1 bits (PSW.3 and PSW.4) select which register bank is in use. Instructions using register addressing will only access the currently specified bank. The lower 128 bit addresses are also mapped into DATA addresses 20H—2FH.

3.2.2 IDATA

The full 256 byte internal RAM can be indirectly addressed using the 8-bit pointers R0 and R1. The first 128 bytes of IDATA include the DATA space. The hardware stack is also located in the IDATA space.

3.2.3 SFR

The upper 128 direct addresses (80H–FFH) access the I/O registers. I/O registers on AT89LP devices are referred to as Special Function Registers. The SFRs can only be accessed through direct addressing. All SFR locations are not implemented. See Section 4. for a listed of available SFRs.

3.3 External Data Memory

AT89LP microcontrollers support a 16-bit external memory address space for up to 64K bytes of external data memory (XDATA). The external memory space is accessed with the MOVX instructions. Some internal data memory resources are mapped into portions of the external address space as shown in Figure 3-6. These memory spaces may require configuration before the CPU can access them. The AT89LP51RB2/RC2/IC2 includes 1152 bytes of on-chip Extra RAM (EDATA).

3.3.1 XDATA

The external data memory space can accommodate up to 64KB of external memory. The AT89LP51RB2/RC2/IC2 uses the standard 8051 external data memory interface with the upper address byte on Port 2, the lower address byte and data in/out multiplexed on Port 0, and the ALE, $\overline{RD}$ and $\overline{WR}$ strobes. XDATA can be accessed with both 16-bit (MOVX @DPTR) and 8-bit (MOVX @Ri) addresses. See Section 3.3.2 on page 18 for more details of the external memory interface.

Some internal data memory spaces are mapped into portions of the XDATA address space. In this case the lower address ranges will access internal resources instead of external memory. Addresses above the range implemented internally will default to XDATA. The AT89LP51RB2/RC2/IC2 supports up to 60–62K bytes of external memory when using the internally mapped memories. Setting the EXTRAM bit (AUXR.1) to one will force all MOVX instructions to access the entire 64KB XDATA regardless of their address (See "AUXR – Auxiliary Control Register" on page 19).

Figure 3-6. External Data Memory Map

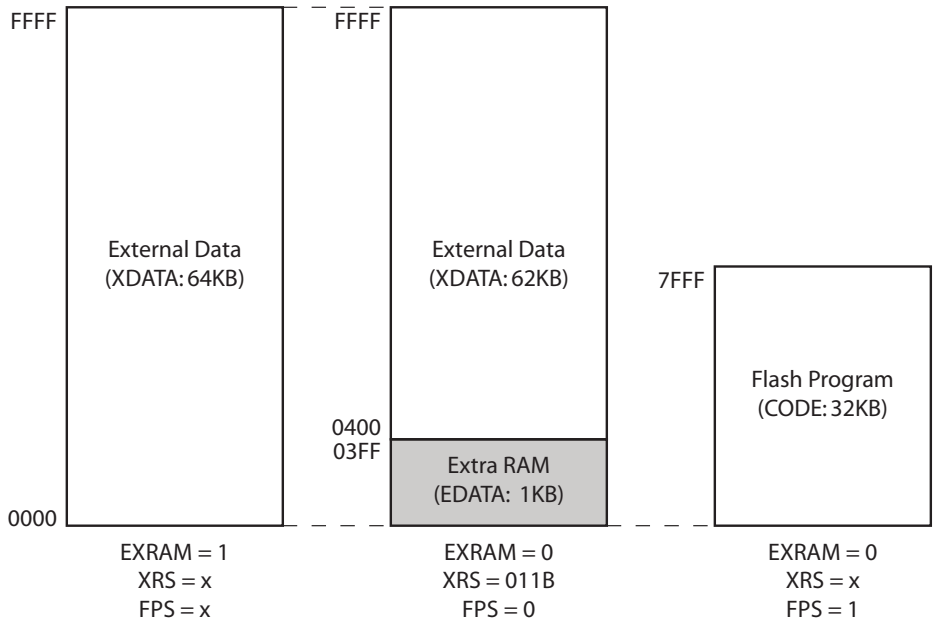

3.3.2 External Data Memory Interface

The AT89LP51RB2/RC2/IC2 uses the standard 8051 external data memory interface with the upper address on Port 2, the lower address and data in/out multiplexed on Port 0, and the ALE, $\overline{RD}$ and $\overline{WR}$ strobes. The interface may be used in two different configurations depending on which type of MOVX instruction is used to access XDATA.

Figure 3-7 shows a hardware configuration for accessing up to 64K bytes of external RAM using a 16-bit linear address. Port 0 serves as a multiplexed address/data bus to the RAM. The Address Latch Enable strobe (ALE) is used to latch the lower address byte into an external register so that Port 0 can be freed for data input/output. Port 2 provides the upper address byte throughout the operation. The MOVX @DPTR instructions use Linear Address mode.

Figure 3-7. External Data Memory 16-bit Linear Address Mode

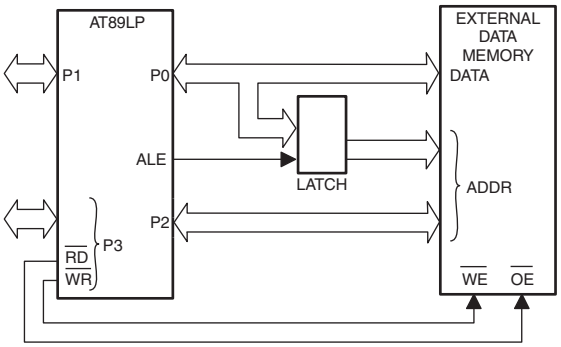

Figure 3-8 shows a hardware configuration for accessing 256-byte blocks of external RAM using an 8-bit paged address. Port 0 serves as a multiplexed address/data bus to the RAM. The ALE strobe is used to latch the address byte into an external register so that Port 0 can be freed for data input/output. The Port 2 I/O lines (or other ports) can provide control lines to page the memory; however, this operation is not handled automatically by hardware. The software application must change the Port 2 register when appropriate to access different pages. The MOVX @Ri instructions use Paged Address mode.

Figure 3-8. External Data Memory 8-bit Paged Address Mode

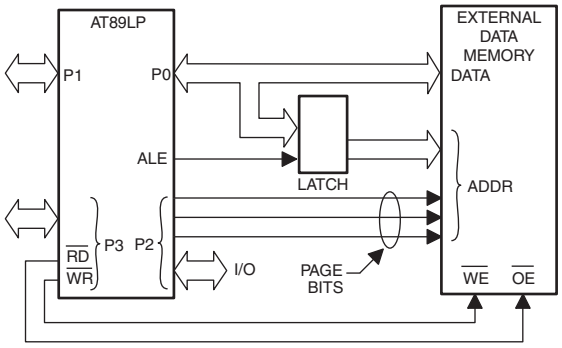

Note that prior to using the external memory interface, $\overline{WR}$ (P3.6) and $\overline{RD}$ (P3.7) must be configured as outputs. See Section 12.1 “Port Configuration” on page 69. P0 and P2 are configured automatically to push-pull output mode when outputting address or data and P0 is automatically tristated when inputting data regardless of the port configuration. The Port 0 configuration will determine the idle state of Port 0 when not accessing the external memory.

Figure 3-9 and Figure 3-10 show examples of external data memory write and read cycles, respectively. The address on P0 and P2 is stable at the falling edge of ALE. The idle state of ALE is controlled by DISALE (AUXR.0). When DISALE = 0 the ALE toggles at a constant rate when not accessing external memory. When DISALE = 1 the ALE is weakly pulled high. DISALE must be one in order to use P4.4 as a general-purpose I/O. The WS bits in AUXR can extended the $\overline{RD}$ and $\overline{WR}$ strobes by 1, 2 or 3 cycles as shown in Figures 3-13, 3-14 and 3-15. If a longer strobe is required, the application can scale the system clock with the clock divider to meet the requirements (See Section 6.8 on page 47).

Table 3-2. AUXR – Auxiliary Control Register

AUXR = 8EH — Reset Value = 0000 10X0B

Not Bit Addressable

	DPU	WS1[1]	WS0	XRS2	XRS1	XRS0	EXTRAM	AO
Bit	7	6	5	4	3	2	1	0

Symbol	Function
DPU	Disable Weak Pull-up. When DPU = 0 all I/O ports in quasi-bidirectional mode have their weak pull-up enabled. When DPU = 1 all I/O ports in quasi-bidirectional mode have their weak pull-up disabled to reduce power consumption.
WS_{1-0}	Wait State Select. Determines the number of wait states inserted into external memory accesses.

WS1	WS0	Wait States	$\overline{RD}$ / $\overline{WR}$ Strobe Width	ALE to $\overline{RD}$ / $\overline{WR}$ Setup
0	0	0	1 x t_{CYC} (Fast); 3 x t_{CYC} (Compatibility)	1 x t_{CYC} (Fast); 1.5 x t_{CYC} (Compatibility)
0	1	1	2 x t_{CYC} (Fast); 15 x t_{CYC} (Compatibility)	1 x t_{CYC} (Fast); 1.5 x t_{CYC} (Compatibility)
1	0	2	2 x t_{CYC} (Fast)	2 x t_{CYC} (Fast)
1	1	3	3 x t_{CYC} (Fast)	2 x t_{CYC} (Fast)

XRS_{2-0}: XRAM Size. Selects the size of the on-chip extra RAM (EDATA)

XRS2	XRS1	XRS0	EDATA Size (bytes)	Address Range
0	0	0	256	0000H–00FFH
0	0	1	512	0000H–01FFH
0	1	0	768 (default)	0000H–02FFH
0	1	1	1024	0000H–03FFH
1	0	0	1152	0000H–047FH
1	0	1	Reserved	
1	1	–	Reserved	

EXTRAM	External RAM Enable. When EXTRAM = 0, MOVX instructions can access the internally mapped portions of the address space (Extra RAM). Accesses to addresses above internally mapped memory will access external memory. Set EXTRAM = 1 to bypass the internal memory and map the entire 64KB address space to external memory. The default state of EXTRAM is set by a user configuration fuse. See Section 24.2 on page 188.
DISALE	ALE Output. When AO = 0 the ALE pulse is active at 1/3 of the system clock frequency in Compatibility mode and 1/2 of the system clock frequency in Fast mode. When AO = 1 the ALE is inactive (high) unless an external memory access occurs. AO must be set to use P4.4 as a general I/O.

Notes: 1. WS1 is only available in Fast mode. WS1 is forced to 0 in Compatibility mode.

Figure 3-9. Fast Mode External Data Memory Write Cycle (WS = 00B)

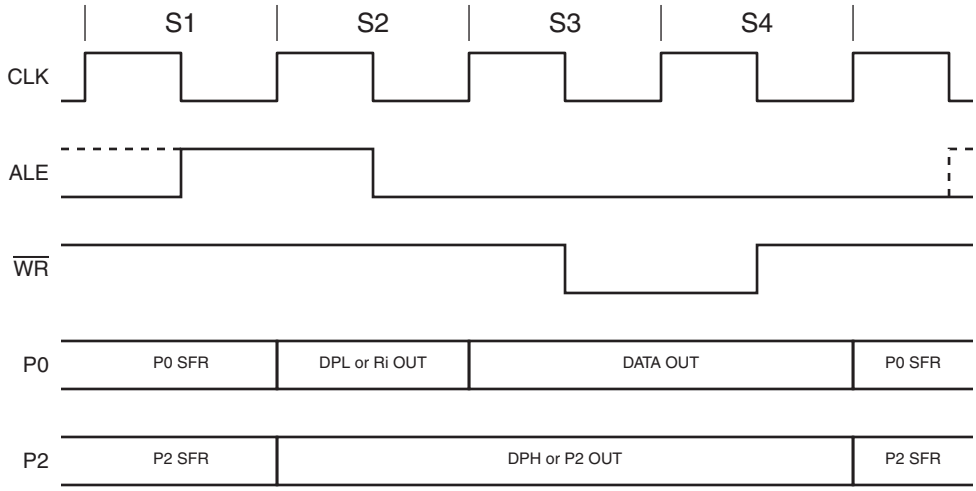

Figure 3-10. Fast Mode External Data Memory Read Cycle (WS = 00B)

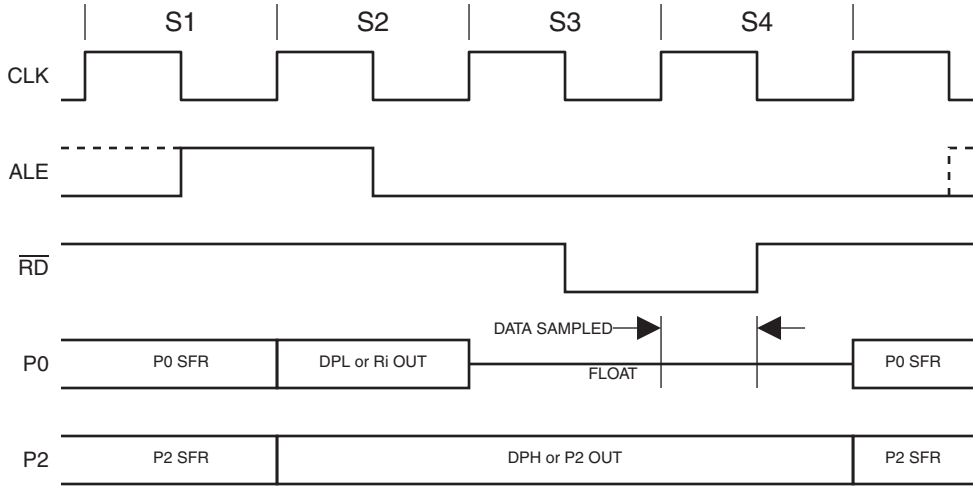

Figure 3-11. Compatibility Mode External Data Memory Write Cycle (WS0 = 0)

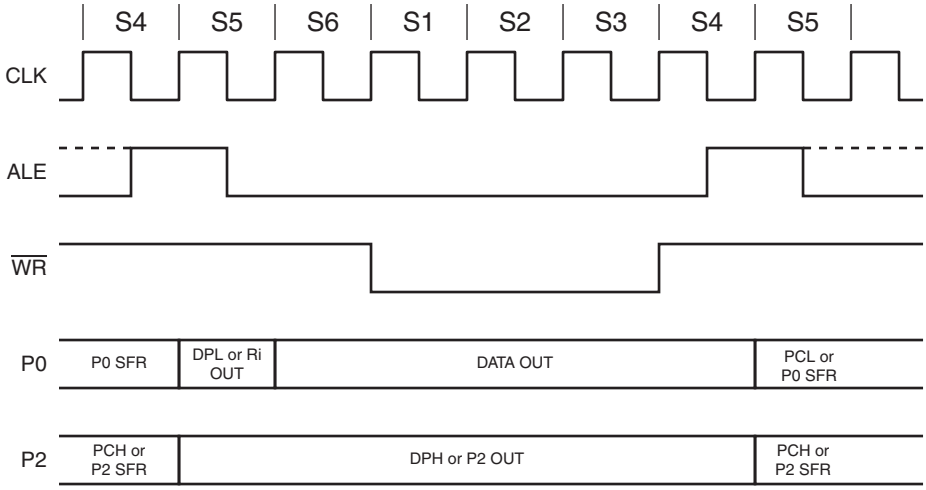

Figure 3-12. Compatibility Mode External Data Memory Read Cycle (WS0 = 0)

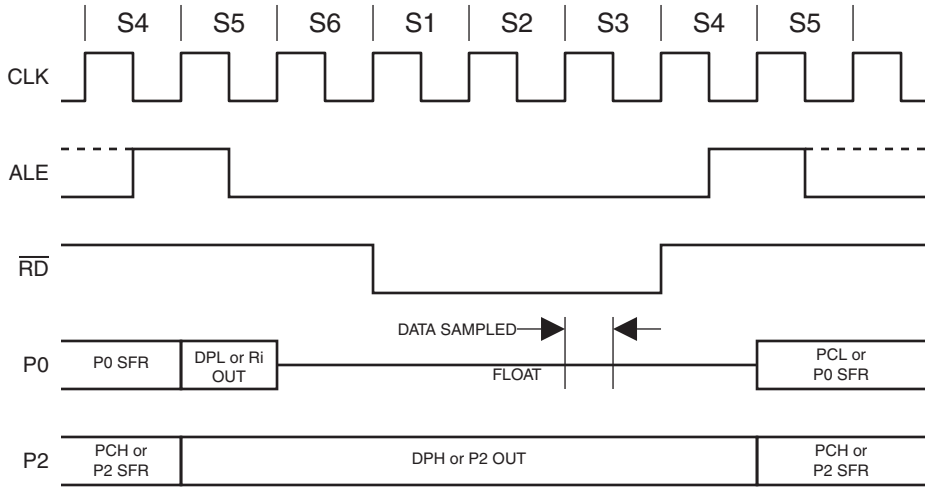

Figure 3-13. MOVX with One Wait State (WS = 01B)

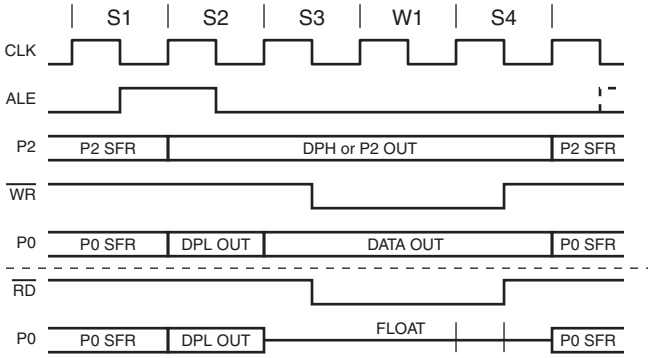

Figure 3-14. MOVX with Two Wait States (WS = 10B)

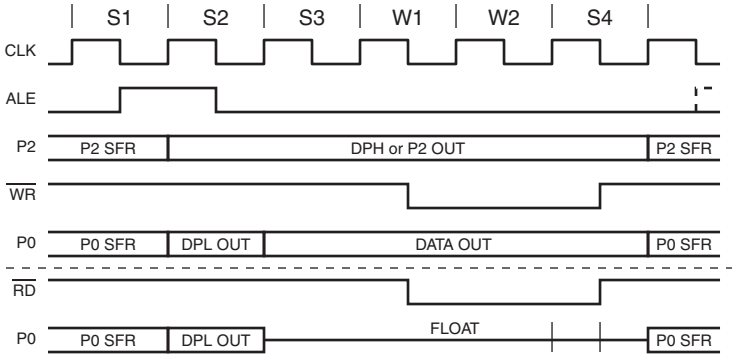

Figure 3-15. MOVX with Three Wait States (WS = 11B)

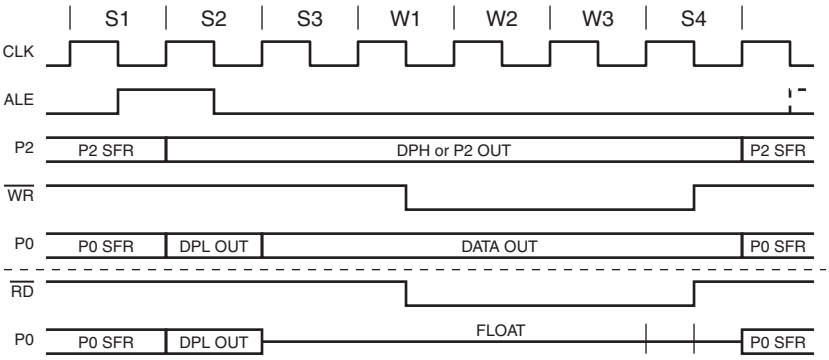

3.4 Extra RAM (EDATA)

The Extra RAM is a portion of the external memory space implemented as an internal 2K byte auxiliary RAM. The Extra RAM is mapped into the EDATA space at the bottom of the external memory address space, from 0000H to 07FFH, when EXTRAM = 0 (AUXR.1). The size of EDATA can be reduced by the XRS bits in AUXR (See Table 3-2). MOVX instructions to this address range will access the internal Extra RAM. EDATA can be accessed with both 16-bit (MOVX @DPTR) and 8-bit (MOVX @Ri) addresses. When 8-bit addresses are used, the PAGE register (0F6H) supplies the upper address bits. The PAGE register breaks EDATA into eight 256-byte pages. A page cannot be specified independently for MOVX @R0 and MOVX @R1. Setting PAGE above 07H enables XDATA access, but does not change the value of Port 2. When 16-bit addresses are used (DPTR), the EEE bit (EECON.1) must also be zero to access EDATA. MOVX instructions to EDATA require a minimum of 2 clock cycles.

Table 3-3. PAGE – EDATA Page Register

PAGE = F6H — Reset Value = 0000 0000B

Not Bit Addressable

	—	—	—	—	PAGE.3	PAGE.2	PAGE.1	PAGE.0
Bit	7	6	5	4	3	2	1	0

Symbol	Function
$PAGE_{7-0}$	Selects which 256-byte page of EDATA is currently accessible by MOVX @Ri instructions when PAGE < 08H. Any PAGE value between 08H and FFH will selected XDATA; however, this value will not be output on P2.

3.5 Extended Stack

The AT89LP51RB2/RC2/IC2 provides an extended stack space for applications requiring additional stack memory. By default the stack is located in the 256-byte IDATA space of internal data memory. The IDATA stack is referenced solely by the 8-bit Stack Pointer (SP: 81H). Setting the XSTK bit in AUXR1 (see Table 5-6) enables the extended stack. The extended stack resides in the EDATA space for up to 2KB of stack memory. The extended stack is referenced by an 11-bit pointer formed from SP and the three LSBs of the Extended Stack Pointer (SPX: EFH) as shown in Figure 3-16. SP is shared between both stacks. Note that the standard IDATA stack will not overflow to the EDATA stack or vice versa. The stack and extended stack are mutually exclusive and SPX is ignored when XTSK = 0. An application choosing to switch between stacks by toggling XSTK must maintain separate copies of SP for use with each stack space. Interrupts should be disabled while swapping copies of SP in such an application to prevent illegal stack accesses.

All interrupt calls and PUSH, POP, ACALL, LCALL, RET and RETI instructions will incur a one or two-cycle penalty while the extended stack is enabled, depending on the number of stack access in each instruction. The extended stack may only exist within the internal EDATA space; it cannot be placed in XDATA. The stack will continue to use EDATA even if EDATA is disabled by setting EXRRAM = 1.

Figure 3-16. Stack Configurations

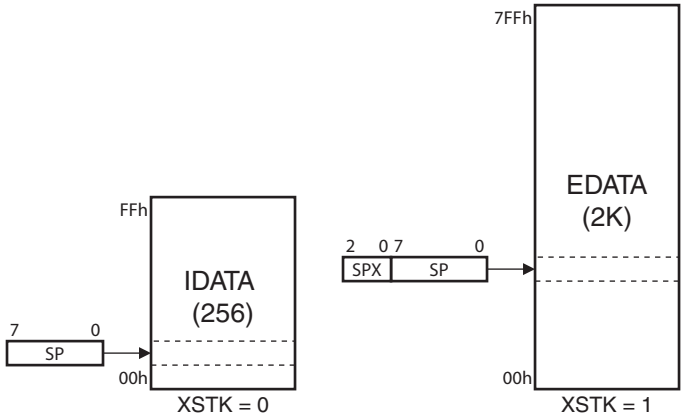

4. Special Function Registers

A map of the on-chip memory area called the Special Function Register (SFR) space is shown in Table 4-1.

Note that not all of the addresses are occupied, and unoccupied addresses may not be implemented on the chip. Read accesses to these addresses will in general return random data, and write accesses will have an indeterminate effect. User software should not write to these unlisted locations, since they may be used in future products to invoke new features.

Table 4-1. Atmel AT89LP51RB2/RC2/IC2 SFR Map and Reset Values

	8	9	A	B	C	D	E	F	
0F8H		CH 0000 0000	CCAP0H 0000 0000	CCAP1H 0000 0000	CCAP2H 0000 0000	CCAP3H 0000 0000	CCAP4H 0000 0000		0FFH
0F0H	B 0000 0000		RL0 0000 0000	RL1 0000 0000	RH0 0000 0000	RH1 0000 0000	PAGE 0000 0000	BX 0000 0000	0F7H
0E8H		CL 0000 0000	CCAP0L 0000 0000	CCAP1L 0000 0000	CCAP2L 0000 0000	CCAP3L 0000 0000	CCAP4L 0000 0000	SPX xxxx x000	0EFH
0E0H	ACC 0000 0000	AX 0000 0000	DSPR 0000 0000	FIRD 0000 0000	MACL 0000 0000	MACH 0000 0000	P0M0 (2)	P0M1 0000 0000	0E7H
0D8H	CCON 00x0 0000	CMOD 00xx x000	CCAPM0 x000 0000	CCAPM1 x000 0000	CCAPM2 x000 0000	CCAPM3 x000 0000	CCAPM4 x000 0000		0DFH
0D0H	PSW 0000 0000	FCON xxxx 0000	EECON 0000 0000		DPLB 0000 0000	DPHB 0000 0000	P1M0 (2)	P1M1 0000 0000	0D7H
0C8H	T2CON 0000 0000	T2MOD 0000 0000	RCAP2L 0000 000	RCAP2H 0000 0000	TL2 0000 000	TH2 0000 0000	P2M0 (2)	P2M1 0000 0000	0CFH
0C0H	P4 1111 1111			SPCON 0001 0100	SPSTA 0000 0000	SPDAT xxxx xxxx	P3M0 (2)	P3M1 0000 0000	0C7H
0B8H	IPL0 xx00 0000	SADEN 0000 0000				AREF 0000 0000	P4M0 (2)	P4M1 0000 0000	0BFH
0B0H	P3 1111 1111	IEN1 xxxx 0000	IPL1 xxxx 0000	IPH1 xxxx 0000				IPH0 xx00 0000	0B7H
0A8H	IEN0 0x00 0000	SADDR 0000 0000		ACSRB 0000 0000	DADL 0000 0000	DADH 0000 0000	CLKREG 0101 xxxx	CKCON1 xxxx xxx0	0AFH
0A0H	P2 1111 1111	DPCF 0000 xxxx	AUXR1 0000 00x0	ACSRA 0000 0000	DADC 0000 0000	DADI 0000 0000	WDTRST (write-only)	WDTPRG 0000 0xx0	0A7H
98H	SCON 0000 0000	SBUF xxxx xxxx	BRL 0000 0000	BDRCON xxx0 0000	KBLS 0000 0000	KBE 0000 0000	KBF 0000 0000	KBMOD 0000 0000	9FH
90H	P1 1111 1111	TCONB 0010 0100	BMSEL xxxx xxx0	SSCON 0000 0000	SSCS 1111 1000	SSDAT 1111 1111	SSADR 1111 1110	CKRL 1111 1111	97H
88H	TCON 0000 0000	TMOD 0000 0000	TL0 0000 0000	TL1 0000 0000	TH0 0000 0000	TH1 0000 0000	AUXR 0000 0000	CKCON0 0000 0000	8FH
80H	P0 1111 1111	SP 0000 0111	DPL 0000 0000	DPH 0000 0000		CKSEL xxxx xxx0	OSCCON xxxx x001	PCON 000x 0000	87H
	0	1	2	3	4	5	6	7	

Notes:
1. All SFRs in the left-most column are bit-addressable.
2. Reset value is 1111 1111B when Tristate-Port Fuse is enabled and 0000 0000B when disabled.
3. Reset value is 0101 0010B when Compatibility mode is enabled and 0000 0000B when disabled.

Table 4-2. C51 Core SFRs

Mnemonic	Add	Name	7	6	5	4	3	2	1	0
ACC	E0h	Accumulator								
B	F0h	B Register								
PSW	D0h	Program Status Word	CY	AC	F0	RS1	RS0	OV	F1	P
SP	81h	Stack Pointer								
SPX	EFh	Extended Stack Pointer	–	–	–	–	SP11	SP10	SP9	SP8
DPL	82h	Data Pointer Low Byte								
DPH	83h	Data Pointer High Byte								
DPLB	D4h	Alternate Data Pointer Low Byte								
DPHB	D5h	Alternate Data Pointer High Byte								
PAGE	F6h	ERAM Page Register	–	–	–	–				

Table 4-3. Digital Signal Processing SFRs

Mnemonic	Add	Name	7	6	5	4	3	2	1	0
AX	E1h	Extended Accumulator								
BX	F7h	Extended B Register								
DSPR	E2h	DSP Control Register	MRW1	MRW0	SMLB	SMLA	CBE1	CBE0	MVCD	DPRB
FIRD	E3h	FIFO Depth								
MACL	E4h	MAC Low Byte								
MACH	E5h	MAC High Byte								

Table 4-4. System Management SFRs

Mnemonic	Add	Name	7	6	5	4	3	2	1	0
PCON	87h	Power Control	SMOD1	SMOD0	PWDEX	POF	GF1	GF0	PD	IDL
AUXR	8Eh	Auxiliary Register 0	DPU	WS1	WS0/M0	XRS2	XRS1	XRS0	EXTRAM	AO
AUXR1	A2h	Auxiliary Register 1	–	–	ENBOOT	XSTK	GF3	0	–	DPS
DPCF	A1h	Datapointer Config Register	DPU1	DPU0	DPD1	DPD0	–	–	–	–
CKRL	97h	Clock Reload Register								
CKCKON0	8Fh	Clock Control Register 0	TWIX2	WDTX2	PCAX2	SIX2	T2X2	T1X2	T0X2	X2
CKCKON1	AFh	Clock Control Register 1	–	–	–	–	–	–	–	SPIX2
CKSEL[1]	85h	Clock Selection Register	–	–	–	–	–	–	–	CKS
CLKREG	AEh	Clock Register	TPS3	TPS2	TPS1	TPS0	–	–	–	–
OSCCON[1]	85h	Oscillator Control Register	–	–	–	–	–	SCLKT0	OscBEn	OscAEn

Note: 1. Present on AT89LP51IC2 Only

Table 4-5. Interrupt SFRs

Mnemonic	Add	Name	7	6	5	4	3	2	1	0
IEN0	A8h	Interrupt Enable Control 0	EA	EC	ET2	ES	ET1	EX1	ET0	EX0
IEN1	B1h	Interrupt Enable Control 1	–	–	EADC	ECMP	–	ESPI	ETWI	EKB
IPH0	B7h	Interrupt Priority Control High 0	IP1D	PPCH	PT2H	PHS	PT1H	PX1H	PT0H	PX0H
IPL0	B8h	Interrupt Priority Control Low 0	IP0D	PPCL	PT2L	PLS	PT1L	PX1L	PT0L	PX0L
IPH1	B3h	Interrupt Priority Control High 1	IP3D	–	PADL	PCMPL	–	SPIH	PTWL	PKBH
IPL1	B2h	Interrupt Priority Control Low 1	IP2D	–	PADH	PCMPH	–	SPIL	PTWH	PKBL

Table 4-6. Port SFRs

Mnemonic	Add	Name	7	6	5	4	3	2	1	0
P0	80h	8-bit Port 0								
P1	90h	8-bit Port 1								
P2	A0h	8-bit Port 2								
P3	B0h	8-bit Port 3								
P4	C0h	8-bit Port 4								
P0M0	E6h	Port 0 Mode 0								
P0M1	E7h	Port 0 Mode 1								
P1M0	D6h	Port 1 Mode 0								
P1M1	D7h	Port 1 Mode 1								
P2M0	CEh	Port 2 Mode 0								
P2M1	CFh	Port 2 Mode 1								
P3M0	C6h	Port 3 Mode 0								
P3M1	C7h	Port 3 Mode 1								
P4M0	BEh	Port 4 Mode 0								
P4M1	BFh	Port 4 Mode 1								

Table 4-7. Serial I/O Port SFRs

Mnemonic	Add	Name	7	6	5	4	3	2	1	0
SCON	98h	Serial Control	FE/SM0	SM1	SM2	REN	TB8	RB8	TI	RI
SBUF	99h	Serial Data Buffer								
SADEN	B9h	Slave Address Mask								
SADDR	A9h	Slave Address								
BDRCON	9Bh	Baud Rate Control	–	–	–	BRR	TBCK	RBCK	SPD	SRC
BRL	9Ah	Baud Rate Reload								

Table 4-8. Timer SFRs

Mnemonic	Add	Name	7	6	5	4	3	2	1	0
TCON	88h	Timer/Counter 0 and 1 Control	TF1	TR1	TF0	TR0	IE1	IT1	IE0	IT0
TMOD	89h	Timer/Counter 0 and 1 Modes	GATE1	C/$\overline{T1}$	M11	M01	GATE0	C/$\overline{T0}$	M10	M00
TCONB	91h	Timer/Counter 0 and 1 Mode B								
TL0	8Ah	Timer/Counter 0 Low Byte								
TH0	8Ch	Timer/Counter 0 High Byte								
TL1	8Bh	Timer/Counter 1 Low Byte								
TH1	8Dh	Timer/Counter 1 High Byte								
RL0	F2h	Timer/Counter 0 Reload Low								
RH0	F3h	Timer/Counter 0 Reload High								
RTL1	F4h	Timer/Counter 1 Reload Low								
RH1	F5h	Timer/Counter 1 Reload High								
WDTRST	A6h	WatchDog Timer Reset								
WDTPRG	A7h	WatchDog Timer Program	WDTOVF	SWRST	WDTEN	WDIDLE	DISRTO	WTO2	WTO1	WTO0
T2CON	C8h	Timer/Counter 2 control	TF2	EXF2	RCLK	TCLK	EXEN2	TR2	C/$\overline{T2}$	CP/$\overline{RL2}$
T2MOD	C9h	Timer/Counter 2 Mode	–	–	–	–	–	–	T2OE	DCEN
RCAP2H	CBh	Timer/Counter 2 Reload/Capture High Byte								
RCAP2L	CAh	Timer/Counter 2 Reload/Capture Low Byte								
TH2	CDh	Timer/Counter 2 High Byte								
TL2	CCh	Timer/Counter 2 Low Byte								

Table 4-9. SPI Controller SFRs

Mnemonic	Add	Name	7	6	5	4	3	2	1	0
SPCON	C3h	SPI Control	SPR2	SPEN	SSDIS	MSTR	CPOL	CPHA	SPR1	SPR0
SPSTA	C4h	SPI Status	SPIF	WCOL	SSERR	MODF	TXE	DORD	REMAP	TBIE
SPDAT	C5h	SPI Data	SPD7	SPD6	SPD5	SPD4	SPD3	SPD2	SPD1	SPD0

Table 4-10. TWI Controller SFRs

Mnemonic	Add	Name	7	6	5	4	3	2	1	0
SSCON	93h	Synchronous Serial Control	SSCR2	SSPE	SSSTA	SSSTO	SSI	SSAA	SSCR1	SSCR0
SSCS	94h	Synchronous Serial Status	SSC4	SSC3	SSC2	SSC1	SSC0	0	0	0
SSDAT	95h	Synchronous Serial Data								
SSADR	96h	Synchronous Serial Address	SSA7	SSA6	SSA5	SSA4	SSA3	SSA2	SSA1	SSGC

Table 4-11. Keyboard Interface SFRs

Mnemonic	Add	Name	7	6	5	4	3	2	1	0
KBLS	9Ch	Keyboard Level Selector	KBLS7	KBLS6	KBLS5	KBLS4	KBLS3	KBLS2	KBLS1	KBLS0
KBE	9Dh	Keyboard Input Enable	KBE7	KBE6	KBE5	KBE4	KBE3	KBE2	KBE1	KBE0
KBF	9Eh	Keyboard Flag Register	KBF7	KBF6	KBF5	KBF4	KBF3	KBF2	KBF1	KBF0
KBMOD	9Fh	Keyboard Mode Register	KBM7	KBM6	KBM5	KBM4	KBM3	KBM2	KBM1	KBM0

Table 4-12. Flash Memory SFR

Mnemonic	Add	Name	7	6	5	4	3	2	1	0
FCON	D2h	Flash Control Register	FPL3	FPL2	FPL1	FPL0	FPS	FMOD1	FMOD0	FBUSY
EECON	D2h	EEPROM Control Register	FOUT	AERS	LDPG	FLGE	$\overline{\text{INHIBIT}}$	ERR	EEE	EEBUSY

Table 4-13. Analog Comparator SFRs

Mnemonic	Add	Name	7	6	5	4	3	2	1	0
ACSRA	A3h	Comparator A Control Register	CSA1	CSA0	CONA	CFA	CENA	CMA	CMA1	CMA0
ACSRB	ABh	Comparator B Control Register	CSB1	CSB0	CONB	CFB	CENB	CMB	CMB1	CMB0
AREF	BDh	Comparator Reference Register	CMPB	CMPA	RFB1	RFB0	CCS1	CCS0	RFA1	RFA0

Table 4-14. ADC Controller SFRs

Mnemonic	Add	Name	7	6	5	4	3	2	1	0
DADC	A4h	DAC/ADC Control Register	ADIF	GO/BSY	DAC	ADCE	LADJ	ACK2	ACK1	ACK0
DADI	A5h	DAC/ADC Input Register	ACON	IREF	TRG1	TRG0	DIFF	ACS2	ACS1	ACS0
DADL	ACh	DAC/ADC Data Low Register								
DADH	ADh	DAC/ADC Data High Register								

Table 4-15. PCA SFRs

Mnemo -nic	Add	Name	7	6	5	4	3	2	1	0
CCON	D8h	PCA Timer/Counter Control	CF	CR	–	CCF4	CCF3	CCF2	CCF1	CCF0
CMOD	D9h	PCA Timer/Counter Mode	CIDL	WDTE	–	–	–	CPS1	CPS0	ECF
CL	E9h	PCA Timer/Counter Low Byte								
CH	F9h	PCA Timer/Counter High Byte								
CCAPM0	DAh	PCA Timer/Counter Mode 0		ECOM0	CAPP0	CAPN0	MAT0	TOG0	PWM0	ECCF0
CCAPM1	DBh	PCA Timer/Counter Mode 1		ECOM1	CAPP1	CAPN1	MAT1	TOG1	PWM1	ECCF1
CCAPM2	DCh	PCA Timer/Counter Mode 2		ECOM2	CAPP2	CAPN2	MAT2	TOG2	PWM2	ECCF2
CCAPM3	DDh	PCA Timer/Counter Mode 3		ECOM3	CAPP3	CAPN3	MAT3	TOG3	PWM3	ECCF3

Table 4-15. PCA SFRs (Continued)

Mnemo -nic	Add	Name	7	6	5	4	3	2	1	0
CCAPM4	DEh	PCA Timer/Counter Mode 4		ECOM4	CAPP4	CAPN4	MAT4	TOG4	PWM4	ECCF4
CCAP0H	FAh	PCA Compare Capture Module 0 H	CCAP0H7	CCAP0H6	CCAP0H5	CCAP0H4	CCAP0H3	CCAP0H2	CCAP0H1	CCAP0H0
CCAP1H	FBh	PCA Compare Capture Module 1 H	CCAP1H7	CCAP1H6	CCAP1H5	CCAP1H4	CCAP1H3	CCAP1H2	CCAP1H1	CCAP1H0
CCAP2H	FCh	PCA Compare Capture Module 2 H	CCAP2H7	CCAP2H6	CCAP2H5	CCAP2H4	CCAP2H3	CCAP2H2	CCAP2H1	CCAP2H0
CCAP3H	FDh	PCA Compare Capture Module 3 H	CCAP3H7	CCAP3H6	CCAP3H5	CCAP3H4	CCAP3H3	CCAP3H2	CCAP3H1	CCAP3H0
CCAP4H	FEh	PCA Compare Capture Module 4 H	CCAP4H7	CCAP4H6	CCAP4H5	CCAP4H4	CCAP4H3	CCAP4H2	CCAP4H1	CCAP4H0
CCAP0L	EAh	PCA Compare Capture Module 0 L	CCAP0L7	CCAP0L6	CCAP0L5	CCAP0L4	CCAP0L3	CCAP0L2	CCAP0L1	CCAP0L0
CCAP1L	EBh	PCA Compare Capture Module 1 L	CCAP1L7	CCAP1L6	CCAP1L5	CCAP1L4	CCAP1L3	CCAP1L2	CCAP1L1	CCAP1L0
CCAP2L	ECh	PCA Compare Capture Module 2 L	CCAP2L7	CCAP2L6	CCAP2L5	CCAP2L4	CCAP2L3	CCAP2L2	CCAP2L1	CCAP2L0
CCAP3L	EDh	PCA Compare Capture Module 3 L	CCAP3L7	CCAP3L6	CCAP3L5	CCAP3L4	CCAP3L3	CCAP3L2	CCAP3L1	CCAP3L0
CCAP4L	EEh	PCA Compare Capture Module 4 L	CCAP4L7	CCAP4L6	CCAP4L5	CCAP4L4	CCAP4L3	CCAP4L2	CCAP4L1	CCAP4L0

5. Enhanced CPU

The AT89LP51RB2/RC2/IC2 uses an enhanced 8051 CPU that runs at 6 to 12 times the speed of standard 8051 devices (or 3 to 6 times the speed of X2 8051 devices). The increase in performance is due to two factors. First, the CPU fetches one instruction byte from the code memory every clock cycle. Second, the CPU uses a simple two-stage pipeline to fetch and execute instructions in parallel. This basic pipelining concept allows the CPU to obtain up to 1 MIPS per MHz. The AT89LP51RB2/RC2/IC2 also has a Compatibility mode that preserves the 12-clock machine cycle of standard 8051s like the AT89C51RB2/RC2/IC2.

5.1 Fast Mode

Fast (Single-Cycle) mode must be enabled by clearing the Compatibility User Fuse. (See "User Configuration Fuses" on page 188.) In this mode one instruction byte is fetched every system clock cycle. The 8051 instruction set allows for instructions of variable length from 1 to 3 bytes. In a single-clock-per-byte-fetch system this means each instruction takes at least as many clocks as it has bytes to execute. The majority of instructions in the AT89LP51RB2/RC2/IC2 follow this rule: the instruction execution time in system clock cycles equals the number of bytes per instruction, with a few exceptions. Branches and Calls require an additional cycle to compute the target address and some other complex instructions require multiple cycles. See "Instruction Set Summary" on page 173. for more detailed information on individual instructions.

Example of Fast mode instructions are shown in Figure 5-1. Note that Fast mode instructions take three times as long to execute if they are fetched from external program memory.

Figure 5-1. Instruction Execution Sequences in Fast Mode

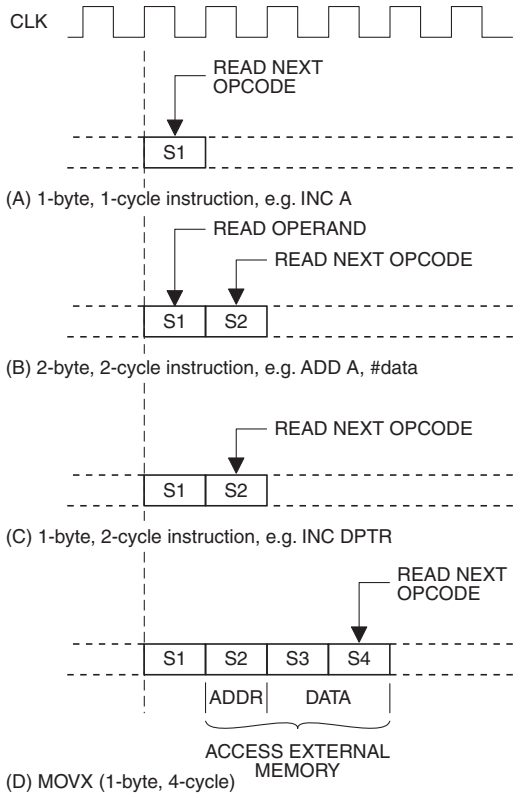

5.2 Compatibility Mode

Compatibility (12-Clock) mode is enabled by default from the factory or by setting the Compatibility User Fuse. In Compatibility mode instruction bytes are fetched every three system clock cycles and the CPU operates with 6-state machine cycles and a divide-by-2 system clock for 12 oscillator periods per machine cycle. Standard instructions execute in1, 2 or 4 machine cycles. Instruction timing in this mode is compatible with standard 8051s such as the AT89C51RB2/RC2/IC2. In Compatibility mode there is no difference in timing between instructions executed from internal versus external program memory.

Compatibility mode can be used to preserve the execution profiles of legacy applications. For a summary of differences between Fast and Compatibility modes see Table 2-3 on page 12. Examples of Compatibility mode instructions are shown in Figure 5-2.

Figure 5-2. Instruction Execution Sequences in Compatibility Mode

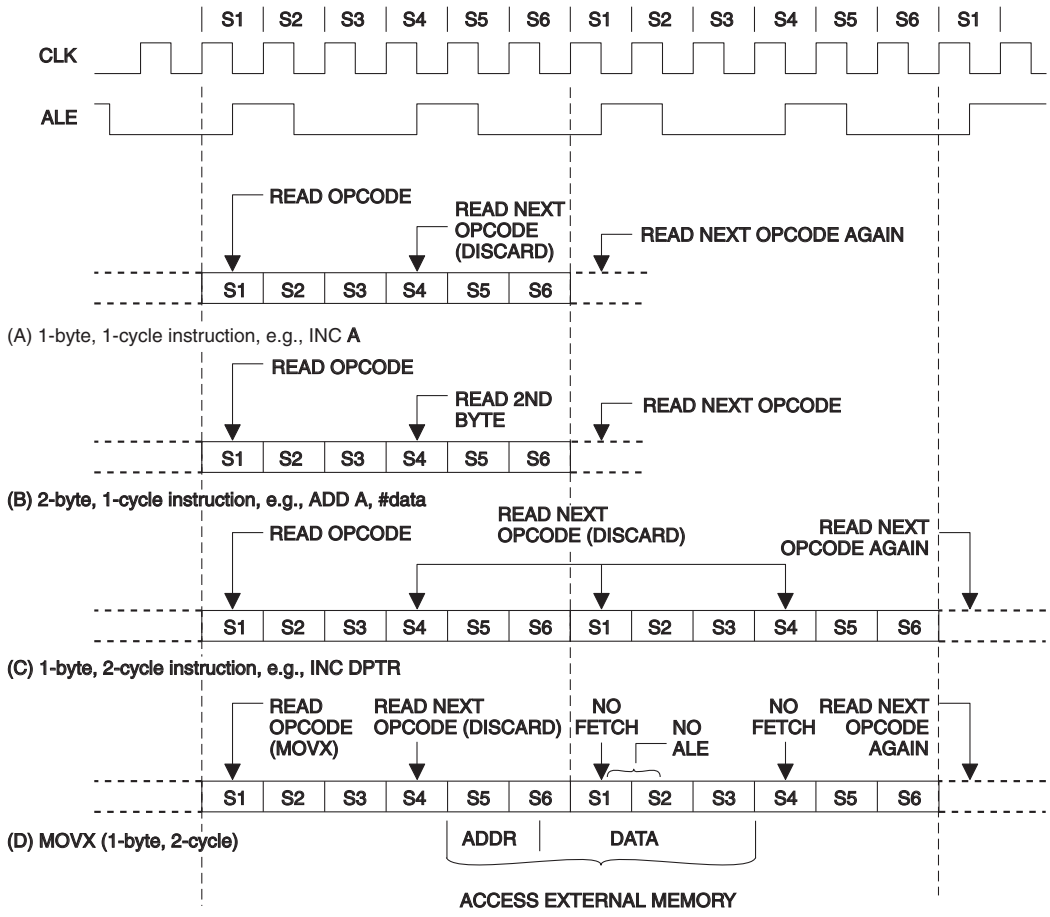

5.3 Multiply–Accumulate Unit (MAC)

The AT89LP51RB2/RC2/IC2 includes a multiply and accumulate (MAC) unit that can significantly speed up many mathematical operations required for digital signal processing. The MAC unit includes a 16-by-16 bit multiplier and a 40-bit adder that can perform integer or fractional multiply-accumulate operations on signed 16-bit input values. The MAC unit also includes a 1-bit arithmetic shifter that will left or right shift the contents of the 40-bit MAC accumulator register (M).

A block diagram of the MAC unit is shown in Figure 5-3. The 16-bit signed operands are provided by the register pairs (AX,ACC) and (BX,B) where AX (E1H) and BX (F7H) hold the higher order bytes. The 16-by-16 bit multiplication is computed through partial products using the AT89LP51RB2/RC2/IC2's 8-bit multiplier. The 32-bit signed product is added to the 40-bit M accumulator register. The MAC operation is summarized as follows:

$$\text{MAC AB:} \qquad M \leftarrow M + \{AX, ACC\} \times \{BX, B\}$$

All computation is done in signed two's complement form.

Figure 5-3. Multiply–Accumulate Unit

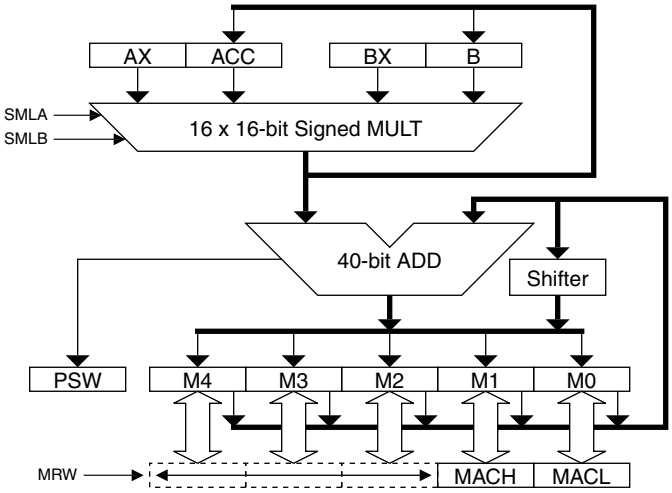

The MAC operation is performed by executing the MAC AB (A5 A4H) extended instruction. This two-byte instruction requires nine clock cycles to complete as the multiply is done in a sequential manner using partial products. The operand registers are not modified by the instruction and the result is stored in the 40-bit M register. MAC AB also updates the C and OV flags in PSW. C represents the sign of the MAC result and OV is the two's complement overflow. Note that MAC AB will not clear OV if it was previously set to one.

Three additional extended instructions operate directly on the M register. CLR M (A5 E4H) clears the entire 40-bit register in two clock cycles. LSL M (A5 23H) and ASR (A5 03H) shift M one bit to the left and right respectively. Right shifts are done arithmetically, i.e. the sign is preserved.

The 40-bit M register is accessible 16-bits at a time through a sliding window as shown in Figure 5-4. The MRW_{1-0} bits in DSPR (Table 5-1) select which 16-bit segment is currently accessible through the MACL and MACH addresses. For normal fixed point operations the window can be fixed to the rank of interest. For example, multiplying two 1.15 format numbers places a 2.30 format result in the M register. If MRW is set to 10B, a 1.15 value is obtained after performing a single LSL M.

Figure 5-4. M Register with Sliding Window

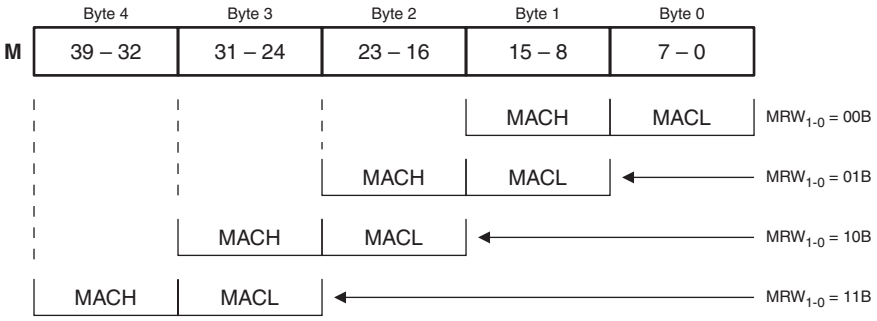

As a consequence of the MAC unit, the standard 8x8 MUL AB instruction can support signed multiplication. The SMLA and SMLB bits in DSPR control the multiplier's interpretation of the ACC and B registers, allowing any combination of signed and unsigned operand multiplication. These bits have no effect on the MAC operation which always multiplies signed-by-signed.

Table 5-1. DSPR – Digital Signal Processing Configuration Register

DSPR = E2H — Reset Value = 0000 0000B

Not Bit Addressable

	MRW1	MRW0	SMLB	SMLA	CBE1	CBE0	MVCD	DPRB
Bit	7	6	5	4	3	2	1	0

Symbol	Function
MRW_{1-0}	M Register Window. Selects which pair of bytes from the 5-byte M register is accessible through MACH (E5H) and MACL (E4H) as shown in Figure 5-4. For example, MRW = 10B for normal 16-bit fixed-point operations where the lowest order portion of the fractional result is discarded.
SMLB	Signed Multiply Operand B. When SMLB = 0, the MUL AB instruction treats the contents of B as an unsigned value. When SMLB = 1, the MUL AB instruction interprets the contents of B as a signed two's complement value. SMLB does not affect the MAC operation.
SMLA	Signed Multiply Operand A. When SMLA = 0, the MUL AB instruction treats the contents of ACC as an unsigned value. When SMLA = 1, the MUL AB instruction interprets the contents of ACC as a signed two's complement value. SMLA does not affect the MAC operation.
CBE1	DPTR1 Circular Buffer Enable. Set CBE1 = 1 to configure DPTR1 for circular addressing over the two circular buffer address ranges. Clear CBE1 for normal DPTR operation.
CBE0	DPTR0 Circular Buffer Enable. Set CBE0 = 1 to configure DPTR0 for circular addressing over the two circular buffer address ranges. Clear CBE0 for normal DPTR operation.
MVCD	MOVC Index Disable. When MVCD = 0, the MOVC A, @A+DPTR instruction functions normally with indexed addressing. Setting MVCD = 1 disables the indexed addressing mode such that MOVC A, @A+DPTR functions as MOVC A, @DPTR.
DPRB	DPTR1 Redirect to B. DPRB selects the source/destination register for MOVC/MOVX instructions that reference DPTR1. When DPRB = 0, ACC is the source/destination. When DPRB = 1, B is the source/destination. DPRB does not change the index register for MOVC instructions.

5.4 Enhanced Dual Data Pointers

The AT89LP51RB2/RC2/IC2 provides two 16-bit data pointers: DPTR0 and DPTR1. The data pointers are used by several instructions to access the program or data memories. The Auxiliary 1 Register (AUXR1) and Data Pointer Configuration Register (DPCF) control operation of the dual data pointers (see Table 5-6 on page 37 and Table 5-7 on page 37). The DPS bit in AUXR1 selects which data pointer is currently referenced by instructions including the DPTR operand. Each data pointer may also be accessed at a pair of SFR addresses that also depend on the DPS value. The data pointer referenced by DPS is located at the register pair DPL and DPH (82H an 83H), and the alternate data pointer not referenced by DPS is located at the register pair DPLB and DPHB (D4H and D5H). When DPS is toggled, the two data pointers also swap which SFR pair will access them as shown in Table 5-2. The AT89LP51RB2/RC2/IC2 provides two methods for fast context switching of the data pointers:

- Bit 2 of AUXR1 is hard-wired as a logic 0. The DPS bit may be toggled (to switch data pointers) simply by incrementing the AUXR1 register, without altering other bits in the register unintentionally. This is the preferred method when only a single data pointer will be used at one time.

```
EX:     INC   AUXR1  ; Toggle DPS
```

- In some cases, both data pointers must be used simultaneously. To prevent frequent toggling of DPS, the AT89LP51RB2/RC2/IC2 supports a prefix notation for selecting the opposite data pointer per instruction. All DPTR instructions, with the exception of JMP @A+DPTR, when prefixed with an 0A5H opcode will use the inverse value of DPS ($\overline{DPS}$) to select the data pointer. Some assemblers may support this operation by using the /DPTR operand. For example, the following code performs a block copy within EDATA:

```
        MOV   AUXR1, #00H     ; DPS = 0
        MOV   DPTR, #SRC      ; load source address to dptr0
        MOV   /DPTR, #DST     ; load destination address to dptr1
        MOV   R7, #BLKSIZE    ; number of bytes to copy
COPY:   MOVX  A, @DPTR        ; read source (dptr0)
        INC   DPTR            ; next src (dptr0+1)
        MOVX  @/DPTR, A       ; write destination (dptr1)
        INC   /DPTR           ; next dst (dptr1+1)
        DJNZ  R7, COPY
```

For assemblers that do not support this notation, the 0A5H prefix must be declared in-line:

```
EX:     DB    0A5H
        INC   DPTR            ; equivalent to INC /DPTR
```

Table 5-2. Data Pointer Register Access

SFR	DPS = 0	DPS = 1
DPL (82H)	DP0L	DP1L
DPH (83H)	DP0H	DP1H
DPLB (D4H)	DP1L	DP0L
DPHB (D5H)	DP1H	DP0H

A summary of data pointer instructions with fast context switching is listed inTable 5-3.

Table 5-3. Data Pointer Instructions

Instruction	Operation	
	DPS = 0	**DPS = 1**
JMP @A+DPTR	JMP @A+DPTR0	JMP @A+DPTR1
MOV DPTR, #data16	MOV DPTR0, #data16	MOV DPTR1, #data16
MOV /DPTR, #data16	MOV DPTR1, #data16	MOV DPTR0, #data16
INC DPTR	INC DPTR0	INC DPTR1
INC /DPTR	INC DPTR1	INC DPTR0
MOVC A,@A+DPTR	MOVC A,@A+DPTR0	MOVC A,@A+DPTR1
MOVC A,@A+/DPTR	MOVC A,@A+DPTR1	MOVC A,@A+DPTR0
MOVX A,@DPTR	MOVX A,@DPTR0	MOVX A,@DPTR1
MOVX A,@/DPTR	MOVX A,@DPTR1	MOVX A,@DPTR0
MOVX @DPTR, A	MOVX @DPTR0, A	MOVX @DPTR1, A
MOVX @/DPTR, A	MOVX @DPTR1, A	MOVX @DPTR0, A

5.4.1 Data Pointer Update

The Dual Data Pointers on the AT89LP51RB2/RC2/IC2 include two features that control how the data pointers are updated. The data pointer decrement bits, DPD1 and DPD0 in AUXR1, configure the INC DPTR instruction to act as DEC DPTR. The resulting operation will depend on DPS as shown in Table 5-4. These bits also control the direction of auto-updates during MOVC and MOVX.

Table 5-4. Data Pointer Decrement Behavior

DPD1	DPD0	Equivalent Operation for INC DPTR and INC /DPTR			
		DPS = 0		DPS = 1	
		INC DPTR	INC /DPTR	INC DPTR	INC /DPTR
0	0	INC DPTR0	INC DPTR1	INC DPTR1	INC DPTR0
0	1	DEC DPTR0	INC DPTR1	INC DPTR1	DEC DPTR0
1	0	INC DPTR0	DEC DPTR1	DEC DPTR1	INC DPTR0
1	1	DEC DPTR0	DEC DPTR1	DEC DPTR1	DEC DPTR0

The data pointer update bits, DPU1 and DPU0, allow MOVX @DPTR and MOVC @DPTR instructions to update the selected data pointer automatically in a post-increment or post-decrement fashion. The direction of update depends on the DPD1 and DPD0 bits as shown in Table 5-5. These bits can be used to make block copy routines more efficient. Note that DPCF should be cleared to zero, disabling these modes, before any calls are made to the Flash API.Care must also be taken when interrupt routines use data pointers to ensure that correct operation is saved/restored correctly.

Table 5-5. Data Pointer Auto-Update

		Update Operation for MOVX and MOVC (DPU1 = 1 & DPU0 = 1)			
		DPS = 0		DPS = 1	
DPD1	DPD0	DPTR	/DPTR	DPTR	/DPTR
0	0	DPTR0++	DPTR1++	DPTR1++	DPTR0++
0	1	DPTR0--	DPTR1++	DPTR1++	DPTR0--
1	0	DPTR0++	DPTR1--	DPTR1--	DPTR0++
1	1	DPTR0--	DPTR1--	DPTR1--	DPTR0--

Table 5-6. AUXR1 – Auxiliary Register 1

AUXR1 = A2H — Reset Value = XXX0 00X0B

Not Bit Addressable

	–	–	ENBOOT	XSTK	GF3	0	–	DPS
Bit	7	6	5	4	3	2	1	0

Symbol	Function
ENBOOT	Set ENBOOT = 1 to map the Boot ROM in the range F800H–FFFFH. This is required to run the bootloader or access the Flash API. When ENBOOT = 0 the Boot ROM is not accessible and normal program memory is mapped to this range. The default value is set by the Bootloader Jump bit. See Section 24.2 on page 188.
XSTK	Extended Stack Enable. When XSTK = 0 the stack resides in IDATA and is limited to 256 bytes. Set XSTK = 1 to place the stack in EDATA for up to 2K bytes of extended stack space. All PUSH, POP, CALL and RET instructions will incur a one or two cycle penalty when accessing the extended stack.
GF3	This bit is a general purpose user flag.
DPS	Data Pointer Select. DPS selects the active data pointer for instructions that reference DPTR. When DPS = 0, DPTR will target DPTR0 and /DPTR will target DPTR1. When DPS = 1, DPTR will target DPTR1 and /DPTR will target DPTR0.

Table 5-7. DPCF – Data Pointer Configuration Register

DPCF = A1H — Reset Value = 0000 00X0B

Not Bit Addressable

	DPU1	DPU0	DPD1	DPD0	–	–	–	–
Bit	7	6	5	4	3	2	1	0

Symbol	Function
DPU1	Data Pointer 1 Update. When set, MOVX @DPTR and MOVC @DPTR instructions that use DPTR1 will also update DPTR1 based on DPD1. If DPD1 = 0 the operation is post-increment and if DPD1 = 1 the operation is post-decrement. When DPU1 = 0, DPTR1 is not updated.
DPU0	Data Pointer 0 Update. When set, MOVX @DPTR and MOVC @DPTR instructions that use DPTR0 will also update DPTR0 based on DPD0. If DPD0 = 0 the operation is post-increment and if DPD0 = 1 the operation is post-decrement. When DPU0 = 0, DPTR0 is not updated.
DPD1	Data Pointer 1 Decrement. When set, INC DPTR instructions targeted to DPTR1 will decrement DPTR1. When cleared, INC DPTR instructions will increment DPTR1. DPD1 also determines the direction of auto-update for DPTR1 when DPU1 = 1.
DPD0	Data Pointer 0 Decrement. When set, INC DPTR instructions targeted to DPTR0 will decrement DPTR0. When cleared, INC DPTR instructions will increment DPTR0. DPD0 also determines the direction of auto-update for DPTR0 when DPU0 = 1.

5.4.2 Data Pointer Operating Modes

The Dual Data Pointers on the AT89LP51RB2/RC2/IC2 include three additional operating modes that affect data pointer based instructions. These modes are controlled by bits in DSPR. Note that these bits in DSPR should be cleared to zero, disabling these modes, before any calls are made to the Flash API.Care must also be taken when interrupt routines use data pointers to ensure that correct operation is saved/restored correctly.

5.4.2.1 DPTR Redirect

The Data Pointer Redirect to B bit, DPRB (DSPR.0), allows MOVX and MOVC instructions to use the B register as the data source/destination when the instruction references DPTR1 as shown in Table 5-8 and Table 5-9. DPRB can improve the efficiency of routines that must fetch multiple operands from different RAM locations.

Table 5-8. MOVX @DPTR Operating Modes

		Equivalent Operation for MOVX			
		MOVX A, @DPTR		MOVX @DPTR, A	
DPRB	**DPS**	**DPTR**	**/DPTR**	**DPTR**	**/DPTR**
0	0	MOVX A, @DPTR0	MOVX A, @DPTR1	MOVX @DPTR0, A	MOVX @DPTR1, A
0	1	MOVX A, @DPTR1	MOVX A, @DPTR0	MOVX @DPTR1, A	MOVX @DPTR0, A
1	0	MOVX A, @DPTR0	MOVX B, @DPTR1	MOVX @DPTR0, A	MOVX @DPTR1, B
1	1	MOVX B, @DPTR1	MOVX A, @DPTR0	MOVX @DPTR1, B	MOVX @DPTR0, A

5.4.2.2 Index Disable

The MOVC Index Disable bit, MVCD (DSPR.1), disables the indexed addressing mode of the MOVC A, @A+DPTR instruction. When MVCD = 1, the MOVC instruction functions as MOVC A, @DPTR with no indexing as shown in Table 5-9. MVCD can improve the efficiency of routines that must fetch multiple operands from program memory. DPRB can change the MOVC destination register from ACC to B, but has no effect on the MOVC index register.

Table 5-9. MOVC @DPTR Operating Modes

		Equivalent Operation for MOVC A, @A+DPTR			
		DPS = 0		DPS = 1	
MVCD	**DPRB**	**DPTR**	**/DPTR**	**DPTR**	**/DPTR**
0	0	MOVC A, @A+DPTR0	MOVC A, @A+DPTR1	MOVC A, @A+DPTR1	MOVC A, @A+DPTR0
0	1	MOVC A, @A+DPTR0	MOVC B, @A+DPTR1	MOVC B, @A+DPTR1	MOVC A, @A+DPTR0
1	0	MOVC A, @DPTR0	MOVC A, @DPTR1	MOVC A, @DPTR1	MOVC A, @DPTR0
1	1	MOVC A, @DPTR0	MOVC B, @DPTR1	MOVC B, @DPTR1	MOVC A, @DPTR0

5.4.2.3 Circular Buffers

The CBE0 and CBE1 bits in DSPR can configure DPTR0 and DPTR1, respectively, to operate in circular buffer mode. The AT89LP51RB2/RC2/IC2 maps circular buffers into two identically sized regions of EDATA/XDATA. These buffers can speed up convolution computations such as FIR and IAR digital filters. The length of the buffers are set by the value of the FIRD (E3H) register for up to 256 entries. Buffer A is mapped from 0000H to FIRD and Buffer B is mapped from 0100H to 100H+FIRD as shown in Figure 5-5. Both data pointers may operate in either buffer. When circular buffer mode is enabled, updates to a data pointer referencing the buffer region will follow circular addressing rules. If the data pointer is equal to FIRD or 100H+FIRD any increment will cause it to overflow to 0000H or 0100H respectively. If the data pointer is equal to 0000H or 0100H any decrement will cause it to underflow to FIRD or 100H+FIRD respectively. In this mode, updates can be either an explicit INC DPTR or an automatic update using DPU*n* where the DPD*n* bits control the direction. The data pointer will increment or decrement normally at any other addresses. Therefore, when circular addressing is in use, the data pointers can still operate as regular pointers in the FIRD+1 to 00FFH and greater than 100H+FIRD ranges.

Figure 5-5. Circular Buffer Mode

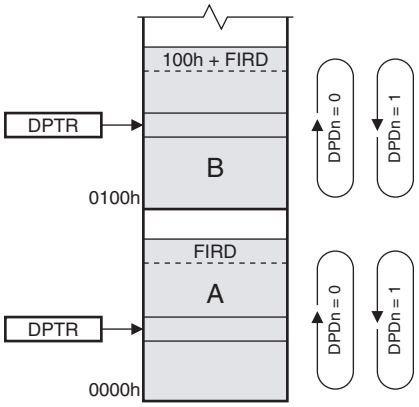

5.5 Instruction Set Extensions

Table 5-10 lists the additions to the 8051 instruction set that are supported by the AT89LP51RB2/RC2/IC2. For more information on the instruction set see Section 22. “Instruction Set Summary” on page 173. For detailed descriptions of the extended instructions see Section 22.1 “Instruction Set Extensions” on page 177.

Table 5-10. AT89LP51RB2/RC2/IC2 Extended Instructions

Opcode	Mnemonic	Description	Bytes	Cycles
A5 00	BREAK	Software breakpoint	2	2
A5 03	ASR M	Arithmetic shift right of M register	2	2
A5 23	LSL M	Logical shift left of M register	2	2
A5 73	JMP @A+PC	Indirect jump relative to PC	2	3
A5 90	MOV /DPTR, #data16	Move 16-bit constant to alternate data pointer	4	4
A5 93	MOVC A, @A+/DPTR	Move code location to ACC relative to alternate data pointer	2	4
A5 A3	INC /DPTR	Increment alternate data pointer	2	3

Table 5-10. AT89LP51RB2/RC2/IC2 Extended Instructions

Opcode	Mnemonic	Description	Bytes	Cycles
A5 A4	MAC AB	Multiply and accumulate	2	9
A5 B6	CJNE A, @R0, rel	Compare ACC to indirect RAM and jump if not equal	3	4
A5 B7	CJNE A, @R1, rel	Compare ACC to indirect RAM and jump if not equal	3	4
A5 E0	MOVX A, @/DPTR	Move external to ACC; 16-bit address in alternate data pointer	2	3/5
A5 E4	CLR M	Clear M register	2	2
A5 F0	MOVX @/DPTR, A	Move ACC to external; 16-bit address in alternate data pointer	2	3/5

- The /DPTR instructions provide support for the dual data pointer features described above (See Section 5.4).
- The ASR M, LSL M, CLR M and MAC AB instructions are part of the Multiply-Accumulate Unit (See Section 5.3).
- The JMP @A+PC instruction supports localized jump tables without using a data pointer.
- The CJNE A, @R_i, rel instructions allow compares of array values with non-constant values.
- The BREAK instruction is used by the On-Chip Debug system. See Section 23. on page 183.
- Some third party assemblers/compilers do not support these instructions. In order to use them you may need to write assembly functions that emulate the instruction by declaring the opcodes inline as shown in Table 5-11.

Table 5-11. Extended Instruction Assembly Emulations

Opcode	Mnemonic	Emulation
A5 00	BREAK	DB A5H, 00H
A5 03	ASR M	DB A5H, 03H or DB A5H followed by RR A
A5 23	LSL M	DB A5H, 23H or DB A5H followed by RL A
A5 73	JMP @A+PC	DB A5H, 73H or DB A5H followed by JMP @A+DPTR
A5 90	MOV /DPTR, #data16	DB A5H followed by MOV DPTR, #data16
A5 93	MOVC A, @A+/DPTR	DB A5H, 93H or DB A5H followed by MOVC A, @A+DPTR
A5 A3	INC /DPTR	DB A5H, A3H or DB A5H followed by INC DPTR
A5 A4	MAC AB	DB A5H, A4H or DB A5H followed by MUL AB
A5 B6	CJNE A, @R0, rel	DB A5H, B6H, (LABEL-$-3) where LABEL is the jump target
A5 B7	CJNE A, @R1, rel	DB A5H, B7H, (LABEL-$-3) where LABEL is the jump target
A5 E0	MOVX A, @/DPTR	DB A5H, E0H or DB A5H followed by MOVX A, @DPTR
A5 E4	CLR M	DB E4H, E0H or DB A5H followed by CLR A
A5 F0	MOVX @/DPTR, A	DB A5H, F0H or DB A5H followed by MOVX @DPTR, A

6. System Clock

The AT89LP51RB2/RC2 has a single system clock that is generated directly from one of three selectable clock sources: on-chip crystal oscillator A in high or low power operation, external clock source on XTAL1A, and the internal 8 MHz RC oscillator. A diagram of the clock subsystem is shown in Figure 6-1. The clock source is selected by the Clock Source A User Fuses as shown in Table 6-1 (See "User Configuration Fuses" on page 188). In addition to this system clock, the AT89LP51IC2 device adds a second system clock source that is selectable from on-chip low frequency crystal oscillator B in, external clock source on XTAL1B, and the internal 8 MHz RC oscillator. A diagram of this clock subsystem is shown in Figure 6-2. Clock source B is selected by the Clock Source B User Fuses as shown in Table 6-2. The choice of clock source also affects the start-up time after a POR, BOD or Power-down event (See "Reset" on page 51 or "Power-down Mode" on page 56).

The AT89LP51RB2/RC2/IC2 includes a X1/X2 feature for compatibility with AT89C51RB2/RC2/IC2. This feature determines if the oscillator source is divided by two or not to generate the system clock. The 8-bit system clock divider may be used to prescale the system clock to reduce the operating frequency. In addition a 4-bit prescaler is available to change the clocks of the peripherals.

Figure 6-1. AT89LP51RB2/RC2 Clock Subsystem Diagram

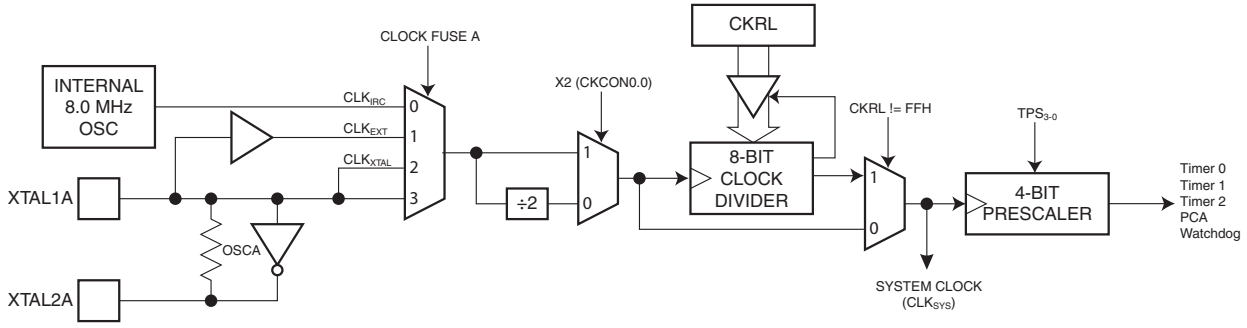

Figure 6-2. AT89LP51IC2 Clock Subsystem Diagram

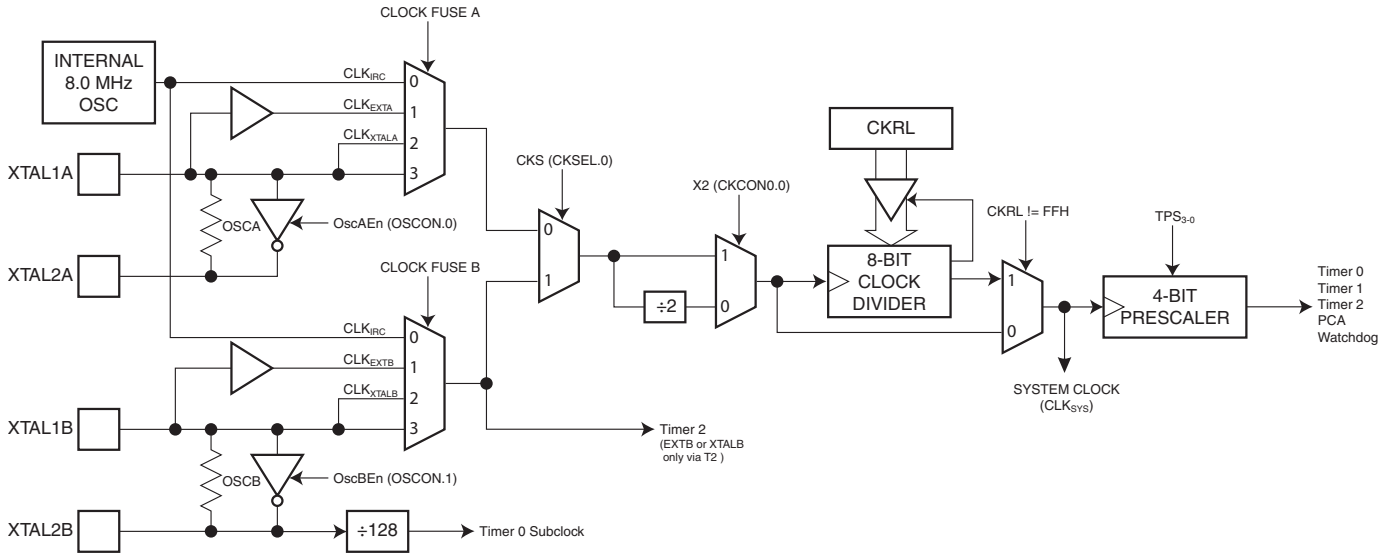

Table 6-1. Clock Source A Settings

Clock Source A Fuse 1	Clock Source A Fuse 0	Selected Clock Source
1	1	High Speed Crystal Oscillator A (f > 12 MHz)
1	0	Low Power Crystal Oscillator A (f ≤12 MHz)
0	1	External Clock on XTAL1A
0	0	Internal 8.0 MHz RC Oscillator

Table 6-2. Clock Source B Settings (AT89LP51IC2 Only)

Clock Source B Fuse 1	Clock Source B Fuse 0	Selected Clock Source
1	–	Low Frequency Crystal Oscillator B (32 kHz)
0	1	External Clock on XTAL1B
0	0	Internal 8.0 MHz RC Oscillator

6.1 Crystal Oscillator A

When enabled, internal inverting oscillator amplifier A is connected between XTAL1A and XTAL2A for connection to an external quartz crystal or ceramic resonator. The oscillator may operate in either high-speed or low-power mode. Low-power mode is intended for crystals of 12 MHz or less and consumes less power than the higher speed mode. The configuration as shown in Figure 6-3 applies for both high and low power oscillators. Note that in some cases, external capacitors C1 and C2 may be reduced due to the on-chip capacitance of the XTAL1A and XTAL2A inputs (approximately 10 pF each). When using the crystal oscillator, P4.6 and P4.7 will have their inputs and outputs disabled. Also, XTAL2A in crystal oscillator mode should not be used to directly drive a board-level clock without a buffer.

An optional 5 MΩ on-chip resistor can be connected between XTAL1A and GND. This resistor can improve the startup characteristics of the oscillator especially at higher frequencies. The resistor can be enabled/disabled with the R1 User Fuse (See “User Configuration Fuses” on page 188.)

Figure 6-3. Crystal Oscillator A Connections

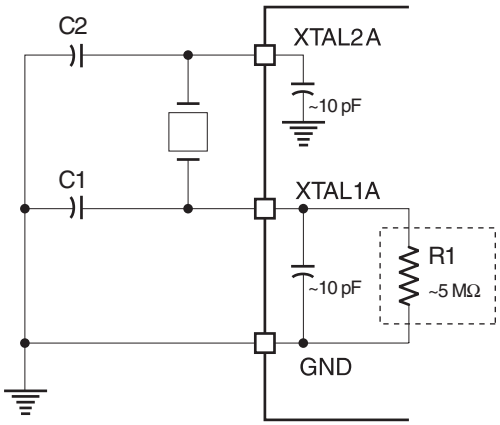

Note: 1. C1, C2 = 5–15 pF for Crystals
= 5–15 pF for Ceramic Resonators

6.2 External Clock Source A

The external clock option disables the oscillator amplifier and allows XTAL1A to be driven directly by an external clock source as shown in Figure 6-4. XTAL2A may be left unconnected, used as general purpose I/O P4.7, or configured to output a divided version of the system clock.

Figure 6-4. External Clock A Drive Configuration

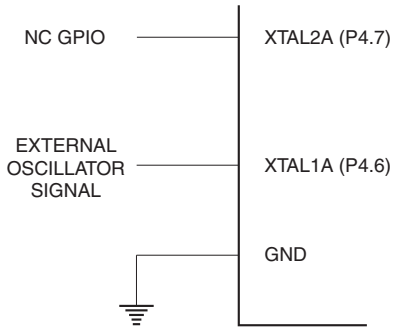

6.3 Internal RC Oscillator

The AT89LP51RB2/RC2/IC2 has an Internal RC oscillator tuned to 8.0 MHz ±2.5%. When enabled as clock source A, XTAL1A and XTAL2A may be used as P4.6 and P4.7 respectively. For AT89LP51IC2 the internal oscillator can also be selected for clock source B, freeing up XTAL1B and XTAL2B to act as P1.0 and P4.2 respectively. The frequency of the oscillator may be adjusted within limits by changing the RC Calibration Byte stored at byte 384 of the User Signature Array. This location may be updated using the IAP interface or by an external device programmer (User Signature location 0180H). See Section 24.1.2 “Atmel Signature Array” on page 188. A copy of the factory calibration byte is stored at byte 8 of the Atmel Signature Array (0008H in SIG space).

6.4 Crystal Oscillator B (AT89LP51IC2)

AT89LP51IC2 includes a second crystal oscillator for low-frequency (~32 KHz) operation. When enabled, internal inverting oscillator amplifier B is connected between XTAL1B and XTAL2B for connection to an external quartz crystal or ceramic resonator as shown in Figure 6-5. Note that in some cases, external capacitors C1 and C2 may be reduced due to the on-chip capacitance of the XTAL1B and XTAL2B inputs (approximately 10 pF each). An on-chip series resistance is included between the amplifier and the XTAL2B pad to limit the drive level. In most cases an external series resistor is not required. When using the crystal oscillator, P1.0 and P4.2 will have their inputs and outputs disabled. Also, XTAL2B in crystal oscillator mode should not be used to directly drive a board-level clock without a buffer.

Please note that the low-frequency oscillator may have a very long settling time. The system must ensure that the oscillator has sufficient time to stabilize before the device is allowed to operate from this clock source.

Figure 6-5. Crystal Oscillator B Connections

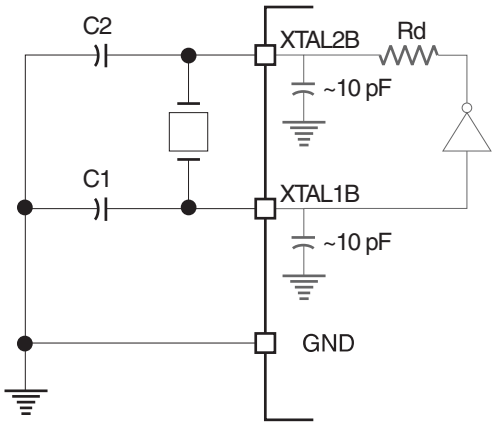

Note: 1. C1, C2 = 10–20 pF for Crystals
= 10–20 pF for Ceramic Resonators

6.5 External Clock Source B (AT89LP51IC2)

The external clock option of AT89LP51IC2 disables the oscillator amplifier B and allows XTAL1B to be driven directly by an external clock source as shown in Figure 6-6. XTAL2B may be left unconnected or used as general purpose I/O P4.2.

Figure 6-6. External Clock A Drive Configuration

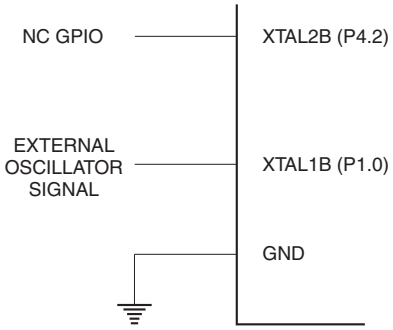

6.6 Dual Oscillator Support (AT89LP51IC2)

The AT89LP51IC2 has the ability to switch between two different selectable system clock sources under software control as shown in Figure 6-2 on page 41.

- OSCA can be a high frequency crystal, external clock or the internal 8 MHz oscillator
- OSCB can be a low frequency crystal, external clock or the internal 8 MHz oscillator

Several operating modes are available and programmable by software:

- Switch system clock source from OSCA to OSCB and vice-versa
- Power down OSCA or OSCB to reduce consumption
- Boot from a fast responding, less accurate oscillator and switch later to a more accurate but slow to stabilize oscillator.

Selection of which oscillator drives the system clock is controlled by the CKS bit in CKSEL. In order to switch to a different oscillator, that oscillator must be enabled with the OscAEn or Osc-

BEn bits in OSCCON. The oscillator selection at reset is controlled by the Oscillator Select user fuse (See Section 24.2 on page 188). This fuse is also shadowed in the OSC bit of the bootloader Hardware Security Byte. The fuse sets the CKS, OscAEn and OscBEn bits as shown in Table 6-3.

Table 6-3. Oscillator Reset States

Control Bit	Oscillator Select Fuse (HSB.OSC)	
	00H (0)	FFH (1)
OscAEn (OSCCON.0)	0	1
OscBEn (OSSCON.1)	1	0
CKS (CKSEL.0)	0	1

6.6.1 Normal Operation

Only a single oscillator source can drive the system clock at any one time. Under normal conditions it is always possible to dynamically switch from OSCA to OSCB or vice-versa by changing the CKS bit. The procedure is as follows:

1. Enable the desired oscillator by setting the OscAEn or OscBEn bits in OSCCON
2. Wait for the oscillator to stabilize. This can be a very long time when using the 32 kHz oscillator. The application software must ensure that the delay is long enough for the operating conditions
3. Change CKS to switch the system clock source. This takes at most 2 periods of each oscillator
4. Disable the previous oscillator by clearing the OscAEn or OscBEn bits in OSCCON
5. Note that unlike AT89C51IC2, the OSCB source is affected by both X2 and the CKRL divider. When changing the clock source, the X2 and CKRL values may need to be updated to achieve the desired frequency

The clock system hardware will prevent the disabling of the current active oscillator and will prevent switching to a disabled oscillator. However, the hardware will not prevent switching to an oscillator before it has stabilized. The application software must ensure enough delay between enabling an oscillator and switching to that oscillator so that the oscillator source can stabilize. This is generally only an issue when using one of the crystal oscillators.

6.6.2 Idle Operation

Any enabled oscillator will continue to function during Idle mode. Power can be reduced by disabling the alternate oscillator before entering Idle mode. Once in Idle mode, the oscillator source cannot be changed until the mode is exited. An interrupt exit from Idle will leave the oscillator control bits (OscAEn, OscBEn and CKS) unchanged. Any reset will exit Idle mode and place these bits in their default states as determined by the user fuse.

6.6.3 Power-down Operation

All oscillators are stopped during Power-down mode. Once in Power-down mode, the oscillator source cannot be changed until the mode is exited. An interrupt exit from Power-down will leave the oscillator control bits (OscAEn, OscBEn and CKS) unchanged. Any reset will exit Power-down mode and place these bits in their default states as determined by the user fuse.

6.6.4 Registers

Table 6-4. CKSEL – Clock Selection Register

CKSEL = 85H (AT89LP51IC2 Only) Reset Value = XXXX XXX?B

Not Bit Addressable

	–	–	–	–	–	–	–	**CKS**
Bit	7	6	5	4	3	2	1	0

Symbol	Function
CKS	**Clock Select**. Clear CKS to connect the system clock (CPU and peripherals) to the OSCB source. Set CKS to connect the system clock to the OSCA source. The default state is set by the Oscillator Select user fuse. See Section 24.2 on page 188.

Table 6-5. OSCCON – Oscillator Control Register

OSCCON = 86H (AT89LP51IC2 Only) Reset Value = XXXX X0??B

Not Bit Addressable

	–	–	–	–	–	**SCLKT0**	**OscBEn**	**OscAEn**
Bit	7	6	5	4	3	2	1	0

Symbol	Function
SCLKT0	**Sub Clock Timer 0**. Clear to connect the Timer 0 counter input to T0 (P3.4). Set to connect the Timer 0 counter input to OSCB output divided by 128. OSCB must be sourced from crystal oscillator B to use this feature.
OscBEn	**OSCB Enable**. Clear to power down the OSCB source. Set to enable the OSCB source. The default state is set by the Oscillator Select user fuse. See Section 24.2 on page 188. OscBEn cannot be disabled when CKS = 0. Disabling OSCB will free the XTAL1B and XTAL2B pins for use as P1.0 and P4.2.
OscAEn	**OSCA Enable**. Clear to power down the OSCA source. Set to enable the OSCA source. The default state is set by the Oscillator Select user fuse. See Section 24.2 on page 188. OscAEn cannot be disabled when CKS = 1.

6.7 X1/X2 Feature

The AT89LP51RB2/RC2/IC2 includes the X1/X2 feature for compatibility with the existing AT89C51RB2/RC2/IC2. This feature allows a divider-by-2 to be switched in/out between the oscillator source and the main system clock. This feature is controlled by the X2 bit in CKCON0 (See Table 6-9 on page 48). When X2 = 0 the system clock is divided by two from the oscillator source, ensuring a 50% duty cycle regardless of the cyclic ratio at the oscillator output. When X2 = 1 the oscillator output is passed through with no division. In this case the duty cycle at the oscillator must be between 40% and 60%. Note that the naming convention can be confusing since X1 means divide-by-2 and X2 means divide-by-1 as shown in Table 6-7. The default state of the X2 bit is set by the X2 User fuse (See Section 24.2 on page 188) but can always be changed by software. This fuse is also shadowed in the X2 bit of the bootloader Hardware Security Byte (HSB). Note that the fuse/HSB bit is inverted from the control bit in the CKCON0 SFR.

Table 6-6. X1/X2 Modes

Mode	X2 (CKCON0.0)	CPU Clock	XTAL1 Duty Cycle	X2 Fuse (HSB.X2)
X1	0	$f_{CPU} = f_{SYS}/2$	No limits	FFH (1)
X2	1	$f_{CPU} = f_{SYS}/1$	40–60%	00H (0)

6.8 System Clock Prescaler

The AT89LP51RB2/RC2/IC2 includes an 8-bit prescaler that allows the system clock to be divided down from the selected clock source by even numbers in the range 4–1020 in X1 mode and 2–510 in X2 mode. The prescaler can reduce power consumption by decreasing the operational frequency during non-critical periods. The prescaler is implemented as an 8-bit counter with reload. Upon overflow from FFH to 00H the counter is reloaded with the value of the CKRL register. When CKRL = FFH the prescaler is disabled. The resulting system frequency is given by the following equations where f_{OSC} is the frequency of the selected clock source and X2 is the value of CKCON0.0:

$$f_{SYS} = \frac{f_{OSC} \times 2^{X2}}{4 \times (255 - CKRL)} \qquad (CKRL < 255)$$

$$f_{SYS} = \frac{f_{OSC} \times 2^{X2}}{2} \qquad (CKRL = 255)$$

The clock divider will prescale the clock for the CPU and all peripherals. The value of CKRL may be changed at any time without interrupting normal execution. Changes to CKRL will take affect on the next prescaler overflow. When CKRL is updated, the new frequency will take affect within a maximum period of 1024 x t_{OSC}. The prescaler is disabled by reset.

Table 6-7. CKRL – Clock Reload Register

CKRL = 97H — Reset Value = 1111 1111B

Not Bit Addressable

	CKRL7	CKRL6	CKRL5	CKRL4	CKRL3	CKRL2	CKRL1	CKRL0
Bit	7	6	5	4	3	2	1	0

Symbol	Function
$CKRL_{7-0}$	**Clock Reload**. CKRL holds the reload value for the 8-bit system clock prescaler. When CKRL = FFH the prescaler is disabled and no division is used. For all other values, the prescaler counts up to FFH and is reloaded with the value of CKRL on the overflow to 00H. Each overflow of the prescaler will toggle the system clock. Changes to CKRL will take affect on the next overflow.

Table 6-8. CLKREG – Clock Register

CLKREG = AEH — Reset Value = 0101 XXXXB

Not Bit Addressable

	TPS3	TPS2	TPS1	TPS0	—	—	—	—
Bit	7	6	5	4	3	2	1	0

Symbol	Function
TPS_{3-0}	**Timer Prescaler**. The Timer Prescaler selects the time base for Timer 0, Timer 1, Timer 2, PCA and the Watchdog Timer. The prescaler is implemented as a 4-bit binary down counter. When the counter reaches zero it is reloaded with the value stored in the TPS bits to give a division ratio between 1 and 16. By default TPS is set to 5 for counting every six cycles (AT89C51RB2/RC2/IC2 compatibility). The prescaler is always enabled in Compatibility mode. In Fast mode the prescaler is off by default and can be individually enabled for the peripherals through the CKCON0 and CKCON1 SFRs.

6.9 Peripheral Clocks

The base peripheral clock is the same as the CPU clock. It is affected by both the X2 setting and the CKRL prescaler. However, individual peripherals can have their clock further modified using the Timer Prescaler in the CLKREG register and the clock selection bits in the CKCON0 and CKCON1 registers. The Timer Prescaler is a 4-bit prescaler controlled by the TPS bits in CLKREG (See Table 6-8 on page 47). This prescaler is shared among all peripherals and controls the counting rate of Timer 0, Timer 1, Timer 2, the PCA Timer and the Watchdog. By default the timers will count every CPU clock cycle in Fast mode (TPS = 0000B) and every six CPU cycles in Compatibility mode (TPS = 0101B).

The bits in CKCON0 and CKCON1 select how the Timer Prescaler affects each peripheral. In Compatibility mode these bits decide if a further divide-by-two is included in addition to the prescaler. This allows a device in X2 mode to use peripherals that still run in X1 mode, i.e. X2 can be enabled to speed up the CPU without needing to update the peripheral baud rates, overflow periods, etc. Peripherals not affected by the Timer Prescaler switch between the CPU clock and the CPU clock divided-by-2.

In Fast Mode the bits in CKCON0 and CKCON1 turn the Timer Prescaler on/off for each peripheral. The following equations show the peripheral clock rates in Compatibility Mode and Fast Mode where ?X2 is a peripherals bit in CKCON0 or CKCON1.

$$f_{PERIPHERAL} = \frac{f_{CPU}}{2^{?X2} \times (TPS + 1)} \quad \text{Compatibility Mode}$$

$$f_{PERIPHERAL} = \frac{f_{CPU}}{TPS + 1} \quad \text{Fast Mode and ?X2 = 1}$$

An overview of the peripheral clock selection is given in Figure 6-7 on page 49.

Table 6-9. CKCON0 – Clock Control Register 0

CKCON0 = 8FH — Reset Value = 0000 000?B

Not Bit Addressable

	TWIX2	WDX2	PCAX2	SIX2	T2X2	T1X2	T0X2	X2
Bit	7	6	5	4	3	2	1	0

Symbol	Function
TWIX2	**Two-Wire Clock.** In Compatibility Mode, clear for one system clock period per peripheral clock cycle and set for two clock periods per peripheral clock cycle (only valid when X2 = 1). In Fast Mode, clear for one system clock period and set for TPS+1 clocks per peripheral clock cycle. This bit only affects the generated SCL rate during TWI master mode.
WDX2	**Watchdog Clock**. In Compatibility Mode, clear for TPS+1 system clock periods per peripheral clock cycle and set for 2(TPS+1) clock periods per peripheral clock cycle. In Fast Mode, clear for one system clock period and set for TPS+1 clocks per peripheral clock cycle. This bit affects the watchdog timeout period.
PCAX2	**Programmable Counter Array Clock**. This bit affects the PCA timer increment rate and depends on CPS in CMOD. **CPS_{1-0} = 00B**: In Compatibility Mode, clear for TPS+1 system clock periods per peripheral clock cycle and set for 2(TPS+1) clock periods per peripheral clock cycle. In Fast Mode, clear for one system clock period and set for TPS+1 clocks per peripheral clock cycle. **CPS_{1-0} = 01B**: In Compatibility Mode, clear for one system clock period per peripheral clock cycle and set for two clock periods per peripheral clock cycle. In Fast Mode, clear for one system clock period and set for TPS+1 clocks per peripheral clock cycle.

Symbol	Function
SIX2	**UART Clock**. In Compatibility Mode, clear for one system clock period per peripheral clock cycle and set for two clock periods per peripheral clock cycle (only valid when X2 = 1). In Fast Mode, clear for one system clock period and set for TPS+1 clocks per peripheral clock cycle. This bit affects the generated baud rate during modes 0 and 2.
T2X2	**Timer 2 Clock**. In Compatibility Mode, clear for TPS+1 system clock periods per peripheral clock cycle and set for 2(TPS+1) clock periods per peripheral clock cycle. In Fast Mode, clear for one system clock period and set for TPS+1 clocks per peripheral clock cycle. This bit affects the timer increment/decrement rate.
T1X2	**Timer 1 Clock**. In Compatibility Mode, clear for TPS+1 system clock periods per peripheral clock cycle and set for 2(TPS+1) clock periods per peripheral clock cycle. In Fast Mode, clear for one system clock period and set for TPS+1 clocks per peripheral clock cycle. This bit affects the timer increment rate.
T0X2	**Timer 0 Clock**. In Compatibility Mode, clear for TPS+1 system clock periods per peripheral clock cycle and set for 2(TPS+1) clock periods per peripheral clock cycle. In Fast Mode, clear for one system clock period and set for TPS+1 clocks per peripheral clock cycle. This bit affects the timer increment rate.
X2	**CPU Clock**. In Compatibility Mode, clear for 12 clock periods per machine cycle and set for 6 clock periods per machine cycle. In Fast Mode, clear for two clock periods per instruction cycle and set for one clock periods per instruction cycle. The default state of X2 is set by the X2 Fuse. See Section 24.2 on page 188.

Figure 6-7. Peripheral Clock Selection

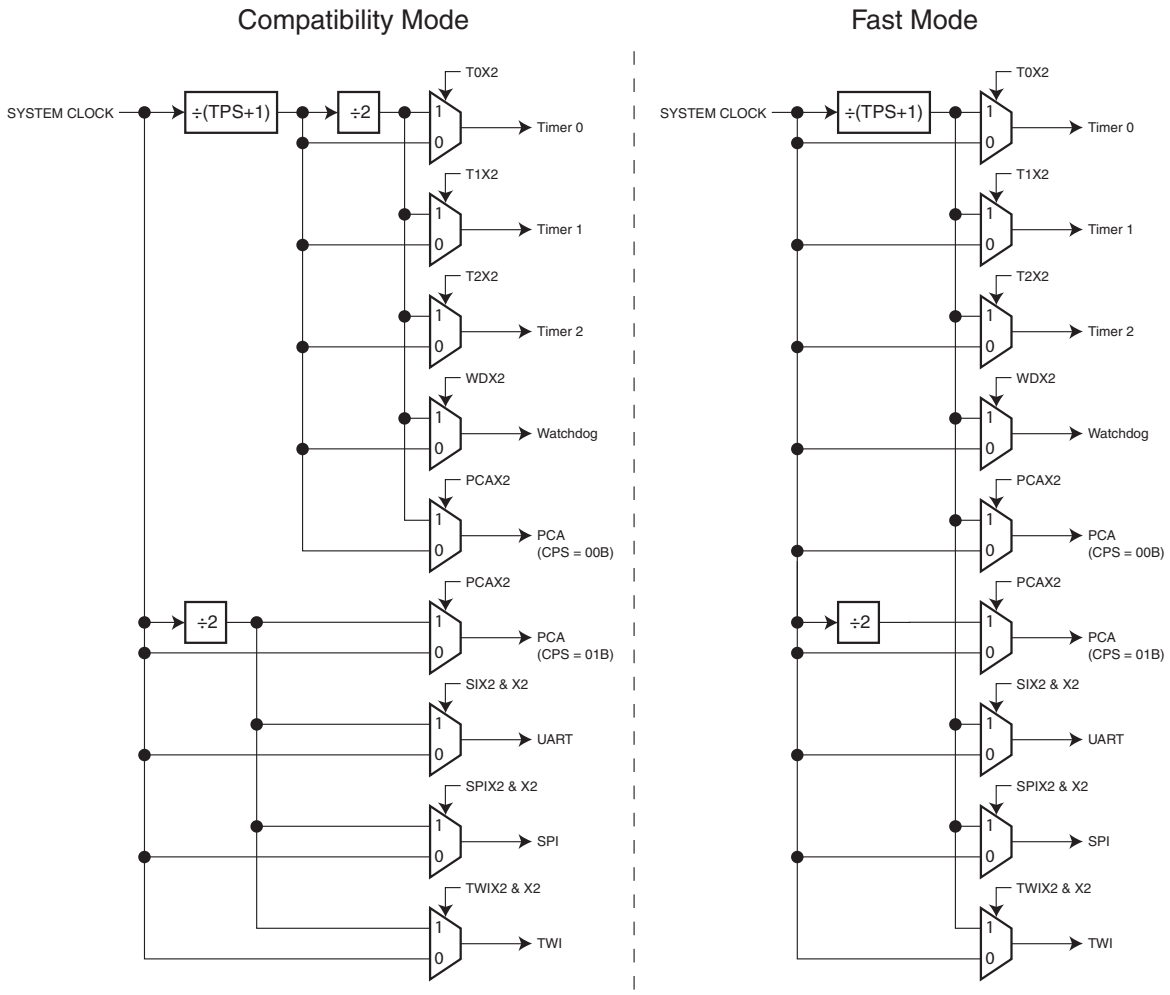

Table 6-10. CKCON1 – Clock Control Register 1

CKCON1 = AFH — Reset Value = XXXX XXX0B

Not Bit Addressable

	–	–	–	–	–	–	–	SPIX2
Bit	7	6	5	4	3	2	1	0

Symbol	Function
SPIX2	**SPI Clock**. In Compatibility Mode, clear for one system clock period per peripheral clock cycle and set for two clock periods per peripheral clock cycle (only valid when X2 = 1). In Fast Mode, clear for one system clock period and set for TPS+1 clocks per peripheral clock cycle. This bit only affects the generated SCK rate during SPI master mode.

6.10 Timer Subclock (AT89L51IC2)

When OSCB of AT89LP51IC2 is enabled and sourced from the low-frequency crystal oscillator, it can drive the counter input of Timer 0 in place of the T0 pin by setting the SCLKT0 bit in OSCCON. The counter input will be toggled at the oscillator frequency divided by 128. For this mode to function correctly, the timer peripheral clock must be running (not in Power-down) and operating at a frequency at least twice as high as the subclock as shown in the following equation:

Timer 0 Subclock: $$f_{TIMER0} \geq \frac{f_{XTAL1B}}{64}$$

This requirement is due to the fact that the timer must still sample the subclock edges the same as if were sampling the T0 pin. This feature is not available when OSCB is sourced from either the external clock on XTAL1B or the internal oscillator.

Pin T2 is also shared with the XTAL1B pin. When OSBC is enabled in the crystal oscillator or external clock modes, T2 will toggle at the oscillator frequency. Timer 2 can then use the oscillator as its counter input as well, with no division. For this mode to function correctly, the timer peripheral clock must be running (not in Power-down) and operating at a frequency at least twice as high OSCB as shown in the following equation:

Timer 2 Subclock: $$f_{TIMER2} \geq f_{XTAL1B} \times 2$$

7. Reset

During reset, all I/O Registers are set to their initial values, the port pins are set to their default mode, and the program starts execution from the Reset Vector, 0000H. The AT89LP51RB2/RC2/IC2 has six sources of reset: power-on reset, brown-out reset, external reset, hardware watchdog reset, PCA watchdog reset and software reset.

Figure 7-1. Reset Subsystem Diagram

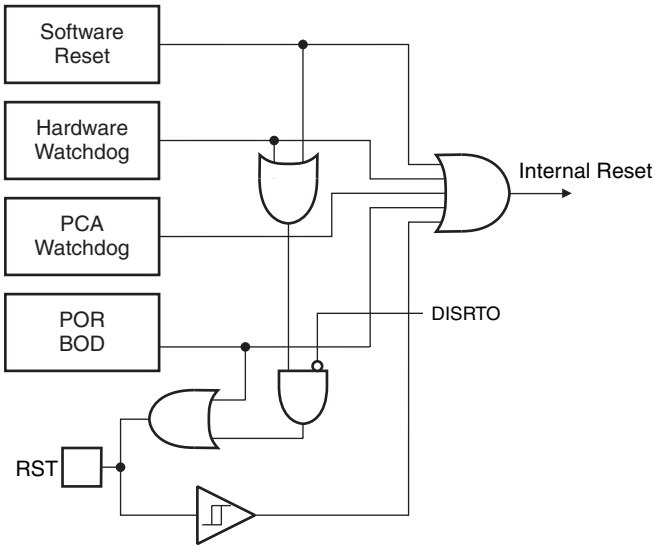

7.1 Power-on Reset

A Power-on Reset (POR) is generated by an on-chip detection circuit. The detection level V_{POR} is nominally 1.4V. The POR is activated whenever V_{DD} is below the detection level. The POR circuit can be used to trigger the start-up reset or to detect a major supply voltage failure. The POR circuit ensures that the device is reset from power-on. A power-on sequence is shown in Figure 7-2. When V_{DD} reaches the Power-on Reset threshold voltage V_{POR}, an initialization sequence lasting t_{POR} is started. When the initialization sequence completes, the start-up timer determines how long the device is kept in POR after V_{DD} rise. The start-up timer does not begin counting until after V_{DD} reaches the Brown-out Detector (BOD) threshold voltage V_{BOD}. The POR signal is activated again, without any delay, when V_{DD} falls below the POR threshold level. A Power-on Reset (i.e. a cold reset) will set the POF flag in PCON. The internally generated reset can be extended beyond the power-on period by holding the RST pin active longer than the time-out.

The start-up timer delay is user-configurable with the Start-up Time User Fuses and depends on the clock source (Table 7-1). The Start-Up Time fuses also control the length of the start-up time after a Brown-out Reset or when waking up from Power-down during internally timed mode. The start-up delay should be selected to provide enough settling time for V_{DD} and the selected clock source. The device operating environment (supply voltage, frequency, temperature, etc.) must meet the minimum system requirements before the device exits reset and starts normal operation. The RST pin may be held active externally until these conditions are met.

While the POR is active a reset output pulse will be generated on the RST pin to reset the board-level circuitry. The output pulse is either open-drain or open-source as shown in Figure 7-4. In order to properly propagate this pulse to the rest of the board in the case of an external capacitor or power-supply supervisor circuit, a 1 kΩ resistor should be placed in series with any external driving circuitry as shown in Figure 7-5. The POR output pulse cannot be disabled.

Figure 7-2. Power-on Reset Sequence

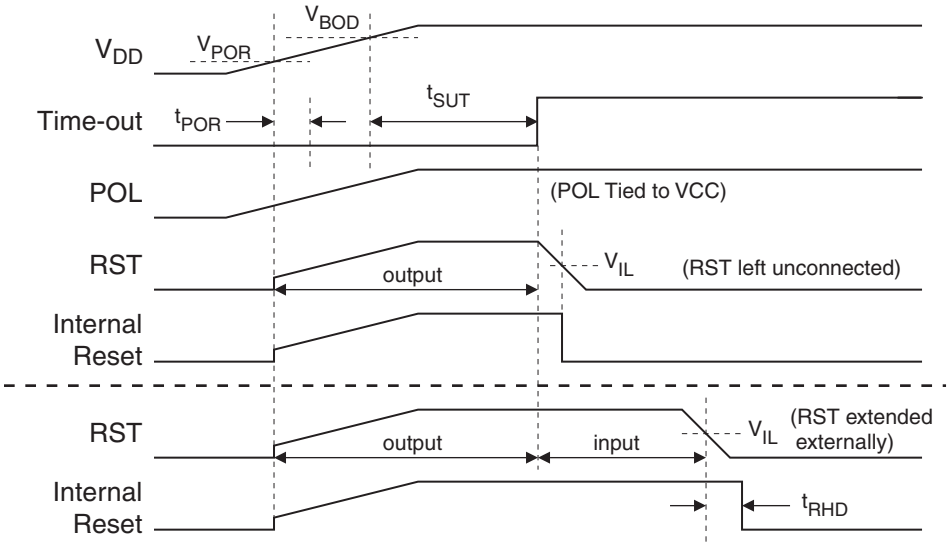

Note: t_{POR} is approximately 143 µs ± 5%.

Table 7-1. Start-up Timer Settings

SUT Fuse 1	SUT Fuse 0	Clock Source	t_{SUT} (± 5%) µs
0	0	Internal RC/External Clock	16
		Crystal Oscillator	1024
0	1	Internal RC/External Clock	512
		Crystal Oscillator	2048
1	0	Internal RC/External Clock	1024
		Crystal Oscillator	4096
1	1	Internal RC/External Clock	4096
		Crystal Oscillator	16384

7.2 Brown-out Reset

The AT89LP51RB2/RC2/IC2 has an on-chip Brown-out Detection (BOD) circuit for monitoring the V_{DD} level during operation by comparing it to a fixed trigger level. The trigger level V_{BOD} for the BOD is nominally 2.0V. The purpose of the BOD is to ensure that if V_{DD} fails or dips while executing at speed, the system will gracefully enter reset without the possibility of errors induced by incorrect execution. A BOD sequence is shown in Figure 7-3. When V_{DD} decreases to a value below the trigger level V_{BOD}, the internal reset is immediately activated. When V_{DD} increases above the trigger level plus about 200 mV of hysteresis, the start-up timer releases the internal reset after the specified time-out period has expired (Table 7-1).

The BOD does not generate a reset output pulse except as part of a POR event.

Figure 7-3. Brown-out Detector Reset

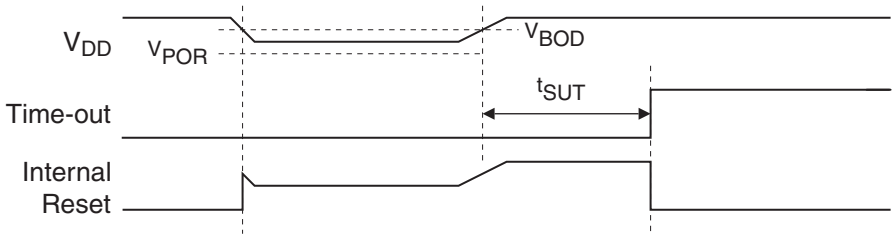

The AT89LP51RB2/RC2/IC2 allows for a wide V_{DD} operating range. The on-chip BOD may not be sufficient to prevent incorrect execution if V_{BOD} is lower than the minimum required V_{DD} range, such as when a 5.0V supply is coupled with high frequency operation. In such cases an external Brown-out Reset circuit connected to the RST pin may be required.

7.3 External Reset

The RST pin of the AT89LP51RB2/RC2/IC2 can function as either an active-low reset input or as an active-high reset input. The polarity of the RST pin is selectable using the POL pin (formerly $\overline{EA}$). When POL is high the RST pin is active high with an on-chip pull-down resistor tied to GND. When POL is low the RST pin is active low with an on-chip pull-up resistor tied to V_{DD}. The RST pin structure is shown in Figure 7-4. Entry into reset is completely asynchronous. The presence of the active reset level on the input will immediately reset the device. A glitch filter will suppress all reset input pulses of less than 50 ns. Exit from reset is synchronous. In Compatibility mode the reset pin is sampled every six clock cycles and must be held inactive for at least twelve clock cycles to deassert the internal reset. In Fast mode the reset pin is sampled every clock cycle and must be held inactive for at least two clock cycles to deassert the internal reset.

The AT89LP51RB2/RC2/IC2 includes an on-chip Power-On Reset and Brown-out Detector circuit that ensures that the device is reset from system power up. In most cases a RC startup circuit is not required on the RST pin, reducing system cost, and the RST pin may be left unconnected if a board-level reset is not present.

Note: RST also serves as the In-System Programming (ISP) enable. ISP is enabled when the external reset pin is held active. When ISP is disabled by fuse, ISP may only be entered by pulling RST active during power-up. If this behavior is necessary, it is recommended to use an active-low reset so that ISP can be entered by shorting RST to GND at power-up.

Figure 7-4. Reset Pin Structure

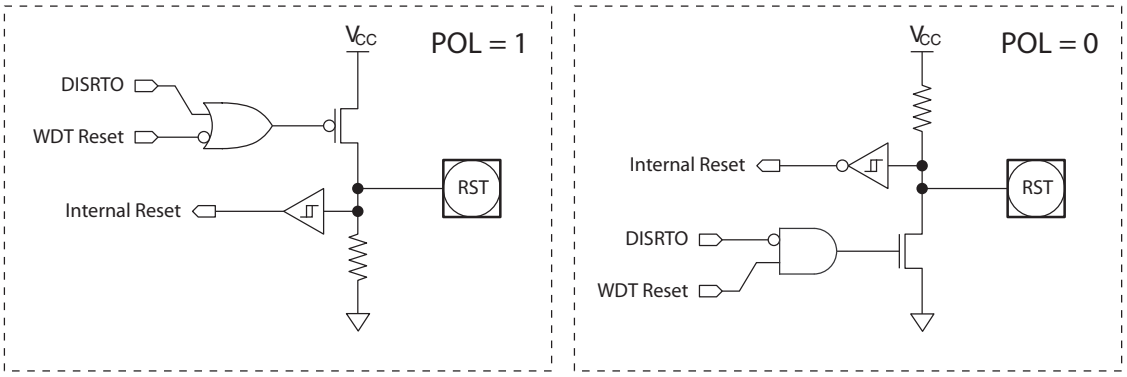

7.4 Hardware Watchdog Reset

When the Hardware Watchdog times out, it will generate a reset pulse lasting 49 clock cycles. By default this pulse is also output on the RST pin. The output pulse is either open-drain or open-source as shown in Figure 7-4. In order to properly propagate this pulse to the rest of the board in the case of an external capacitor or power-supply supervisor circuit, a 1 kΩ resistor should be placed in series with any external driving circuitry as shown in Figure 7-5. To disable the RST output the DISRTO bit in the WDTPRG register must be set to one. Watchdog reset will set the WDTOVF flag in WDTPRG. To prevent a Watchdog reset, the watchdog reset sequence 1EH/E1H must be written to WDTRST before the Watchdog times out. See Section 16. on page 104 for details on the operation of the Watchdog.

Figure 7-5. Recommended Reset Output Schematics

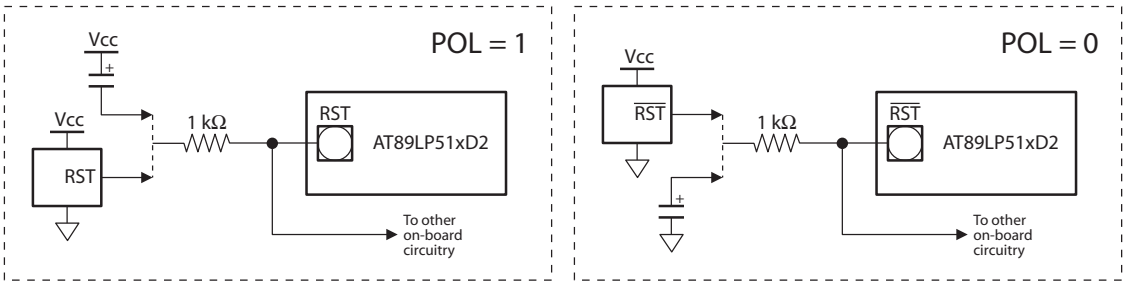

7.5 PCA Watchdog Reset

Module 4 of the Programmable Counter Array (PCA) can be configured as a watchdog timer. When a compare match occurs between module 4 and the PCA timer, it will generate an internal reset pulse lasting 16 clock cycles. This pulse is never output on the RST pin. See Section 15.7 on page 104 for details on the operation of the PCA Watchdog.

7.6 Software Reset

The CPU may generate a 49-clock cycle reset pulse by writing the software reset sequence 5AH/A5H to the WDRST register. A software reset will set the SWRST bit in WDTPRG. See "Software Reset" on page 105 for more information on software reset. Writing any sequences other than 5AH/A5H or 1EH/E1H to WDTRST will generate an immediate reset and set both WDTOVF and SWRST to flag an error. Software reset will also drive the RST pin active unless DISRTO is set.

8. Power Saving Modes

The AT89LP51RB2/RC2/IC2 supports two different software selectable power-reducing modes: Idle and Power-down. These modes are accessed through the PCON register. Additional steps may be required to achieve the lowest possible power consumption while using these modes. In addition the AT89LP51RB2/RC2/IC2 has fusible configuration options that can further reduce the active power consumption under certain circumstances.

8.1 Idle Mode

Setting the IDL bit in PCON enters idle mode. Idle mode halts the internal CPU clock. The CPU state is preserved in its entirety, including the RAM, stack pointer, program counter, program status word, and accumulator. The Port pins hold the logic states they had at the time that Idle was activated. Idle mode leaves the peripherals running in order to allow them to wake up the CPU when an interrupt is generated. The timer and UART peripherals continue to function during Idle. If these functions are not needed during idle, they should be explicitly disabled by clearing the appropriate control bits in their respective SFRs. The watchdog may be selectively enabled or disabled during Idle by setting/clearing the WDIDLE bit. The Brown-out Detector is always active during Idle. Any enabled interrupt source or reset may terminate Idle mode. When exiting Idle mode with an interrupt, the interrupt will immediately be serviced, and following RETI the next instruction to be executed will be the one following the instruction that put the device into Idle.

The power consumption during Idle mode can be further reduced by prescaling down the system clock using the System Clock Prescaler (Section 6.8 on page 47). Be aware that the clock divider will affect all peripheral functions and baud rates may need to be adjusted to maintain their rate with the new clock frequency.

Table 8-1. PCON – Power Control Register

PCON = 87H — Reset Value = 000X 0000B

Not Bit Addressable

	SMOD1	SMOD0	PWDEX	POF	GF1	GF0	PD	IDL
Bit	7	6	5	4	3	2	1	0

Symbol	Function
SMOD1	Double Baud Rate bit. Doubles the baud rate of the UART in Modes 1, 2, or 3.
SMOD0	Frame Error Select. When SMOD0 = 1, SCON.7 is SM0. When SMOD0 = 1, SCON.7 is FE. Note that FE will be set after a frame error regardless of the state of SMOD0.
PWDEX	Power-down Exit Mode. When PWDEX = 0, wake up from Power-down is externally controlled. When PWDEX = 1, wake up from Power-down is internally timed.
POF	Power Off Flag. POF is set to “1” during power up (i.e. cold reset). It can be set or reset under software control and is not affected by RST or BOD (i.e. warm resets).
GF1, GF0	General-purpose Flags
PD	Power-down bit. Setting this bit activates power-down operation. The PD bit is cleared automatically by hardware when waking up from power-down.
IDL	Idle Mode bit. Setting this bit activates Idle mode operation. The IDL bit is cleared automatically by hardware when waking up from idle

8.2 Power-down Mode

Setting the Power-down (PD) bit in PCON enters Power-down mode. Power-down mode stops the oscillator, disables the BOD and powers down the Flash memory in order to minimize power consumption. Only the power-on circuitry will continue to draw power during Power-down. During Power-down, the power supply voltage may be reduced to the RAM keep-alive voltage. The RAM contents will be retained, but the SFR contents are not guaranteed once V_{DD} has been reduced. Power-down may be exited by external reset, power-on reset, or certain enabled interrupts.

8.2.1 Interrupt Recovery from Power-down

Two external interrupt sources may be configured to terminate Power-down mode: external interrupts $\overline{INT0}$ (P3.2) and $\overline{INT1}$ (P3.3). To wake up by external interrupt $\overline{INT0}$ or $\overline{INT1}$, that interrupt must be enabled by setting EX0 or EX1 in IE and must be configured for level-sensitive operation by clearing IT0 or IT1.

When terminating Power-down by an interrupt, two different wake-up modes are available. When PWDEX in PCON is one, the wake-up period is internally timed as shown in Figure 8-1. At the falling edge on the interrupt pin, Power-down is exited, the oscillator is restarted, and an internal timer begins counting. The internal clock will not be allowed to propagate to the CPU until after the timer has timed out. After the time-out period the interrupt service routine will begin. The time-out period is controlled by the Start-up Timer Fuses (see Table 7-1 on page 52). The interrupt pin need not remain low for the entire time-out period.

Figure 8-1. Interrupt Recovery from Power-down (PWDEX = 1)

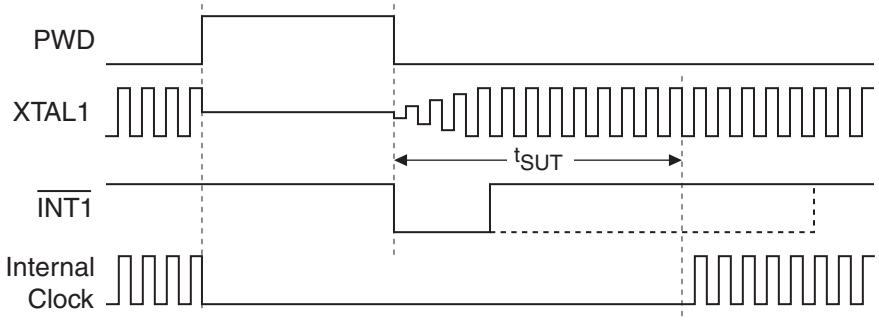

When PWDEX = “0”, the wake-up period is controlled externally by the interrupt. Again, at the falling edge on the interrupt pin, power-down is exited and the oscillator is restarted. However, the internal clock will not propagate until the rising edge of the interrupt pin as shown in Figure 8-2. The interrupt pin should be held low long enough for the selected clock source to stabilize. After the rising edge on the pin the interrupt service routine will be executed.

Figure 8-2. Interrupt Recovery from Power-down (PWDEX = 0)

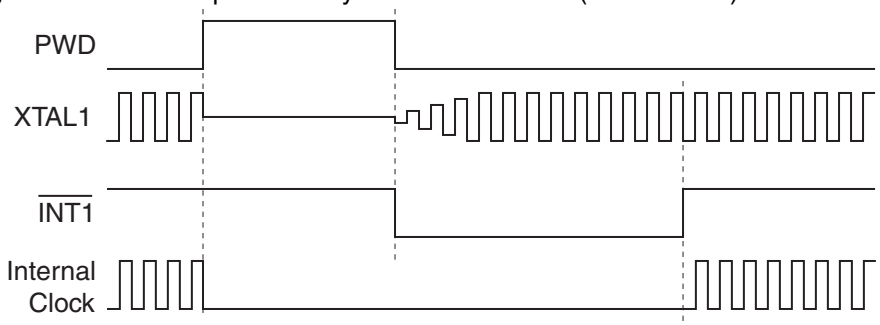

8.2.2 Reset Recovery from Power-down

The wake-up from Power-down through an external reset is similar to the interrupt with PWDEX = “1”. At the rising edge of RST, Power-down is exited, the oscillator is restarted, and an internal timer begins counting as shown in Figure 8-3. The internal clock will not be allowed to propagate to the CPU until after the timer has timed out. The time-out period is controlled by the Start-up Timer Fuses. (See Table 7-1 on page 52). If RST returns low before the time-out, a two clock cycle internal reset is generated when the internal clock restarts. Otherwise, the device will remain in reset until RST is brought low.

Figure 8-3. Reset Recovery from Power-down (POL = 1)

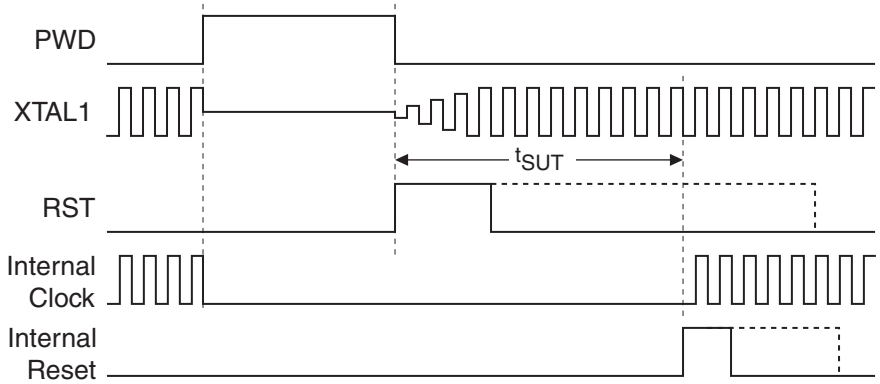

8.3 Reducing Power Consumption

Several possibilities need consideration when trying to reduce the power consumption in an 8051-based system.

- Idle or Power-down mode should be used as often as possible with interrupts waking up the system to handle specific tasks
- All un-needed peripheral functions should be disabled
- The System Clock Prescaler can scale down the operating frequency during periods of low demand (See “System Clock Prescaler” on page 47.)
- The ALE output can be disabled by setting AO in AUXR, thereby also reducing EMI
- For AT89LP51IC2, switch the system clock from a high power oscillator like XTALA to a lower power oscillator like the internal 8 MHz oscillator during periods when frequency accuracy is not as important.

8.4 Low Power Configuration

Several of the nonvolatile User Configuration Fuses can enable modes where less power will be consumed during normal operation as listed in Table 8-2. These fuses must generally be set once by an external programmer to match the desired operating environment.

Table 8-2. User Configuration Fuses Affecting Power Consumption

Fuse Name	Description
Clock Source A	The Low Power Crystal Oscillator (setting 2) will use half the power of the High Speed Crystal Oscillator (setting 3) for the same frequency (≤12 MHz)
X2 Mode	X2 mode can keep the same CPU speed while cutting the crystal frequency in half.
Low Power Mode	Low Power Mode can reduce the power consumption for system frequencies under 20 MHz. Extra Low Power Mode can further reduce the power if the system frequency is less than 1 MHz.

- For crystal frequencies of 12 MHz or less, OSCA should be placed in Low Power Crystal Oscillator mode
- X1 Mode is supported for compatibility with existing applications. X2 Mode should be used to achieve the same CPU and peripheral speed at half the crystal frequency
- The Low Power Mode settings change the slope and intercept of the active current versus frequency relationship. See Table 8-3 below.

Table 8-3. Low Power Mode Fuses

Fuse 1 (0EH)	Fuse 0 (0DH)	Mode	Description
00H (0)	FFH (1)	Extra Low Power	Lowest power mode. Use only if the oscillator frequency can never be above 1 MHz.
FFH (1)	FFH (0)	Low Power	Low power mode will reduce consumption for CPU frequencies under 10 MHz and slightly increase consumption for CPU frequencies over 10 MHz compared to Normal Mode. This mode is best for oscillator frequencies below 10 MHz or for frequencies 10–20 MHz where the prescaler may be used to scale the CPU frequency below 10 MHz.
—	00H (0)	Normal	Normal mode has higher consumption than Low Power mode for CPU frequencies under 10 MHz but slightly less consumption for CPU frequencies over 10 MHz. This mode is best for oscillator frequencies over 20 MHz or for frequencies 10–20 MHz where the prescaler is not used to scale the CPU frequency.

9. Interrupts

The AT89LP51RB2/RC2/IC2 provides 11 interrupt vectors: two external interrupts ($\overline{INT0}$ and $\overline{INT1}$), three timer interrupts (Timers 0, 1 and 2), a serial port interrupt, an SPI interrupt, a keyboard interrupt, a PCA interrupt, an analog comparator interrupt and an ADC interrupt. These interrupts and the system reset each have a separate program vector at the start of the program memory space.

Table 9-1. Interrupt Vector Addresses and Priority

Polling Priority	Interrupt	Source	Vector Address
0	System Reset	RST or POR or BOD	0000H
1	External Interrupt 0	IE0	0003H
2	Timer 0 Overflow	TF0	000BH
3	External Interrupt 1	IE1	0013H
4	Timer 1 Overflow	TF1	001BH
6	Serial Port Interrupt	RI or TI	0023H
7	Timer 2 Interrupt	TF2 or EXF2	002BH
5	PCA Interrupt	CF, CCF0, CCF1, CCF2, CCF3 or CCF4	0033H
8	Keyboard Interrupt	KBF_{7-0}	003BH
9	Two-Wire Interrupt	SI	0043H
10	SPI Interrupt	SPIF or MODF or TXE	004BH
11	reserved		0053H
12	Analog Comparator Interrupt	CFA or CFB	005BH
13	ADC Interrupt	ADIF	0063H

Each interrupt source can be individually enabled or disabled by setting or clearing a bit in the interrupt enable registers: IEN0 and IEN1. The IEN0 register also contains a global disable bit, EA, which disables all interrupts. All of the bits that generate interrupts can be set or cleared by software, with the same result as though they had been set or cleared by hardware. That is, interrupts can be generated and pending interrupts can be canceled in software.

9.1 Interrupt Priority

Each interrupt source can be individually programmed to one of four priority levels by setting or clearing bits in the interrupt priority registers: IPL0, IPL1, IPH0 and IPH1. IPL0 and IPL1 hold the low order priority bits and IPH0 and IPH1 hold the high priority bits for each interrupt as shown in Table 9-2. An interrupt service routine in progress can be interrupted by a higher priority interrupt, but not by another interrupt of the same or lower priority. The highest priority interrupt cannot be interrupted by any other interrupt source. If two requests of different priority levels are pending at the end of an instruction, the request of higher priority level is serviced. If requests of the same priority level are pending at the end of an instruction, an internal polling sequence determines which request is serviced. The polling sequence is based on the vector address; an interrupt with a lower vector address has higher priority than an interrupt with a higher vector address, except in the case of the PCA, whose polling priority is moved up by two as shown in Table 9-1 and Figure 9-1. Note that the polling sequence is only used to resolve pending requests of the same priority level.

Table 9-2. Priority Level Bit Values

IPH.x	IPL.x	Interrupt Priority Level
0	0	0 (Lowest)
0	1	1
1	0	2
1	1	3 (Highest)

Figure 9-1. Interrupt Control Subsystem

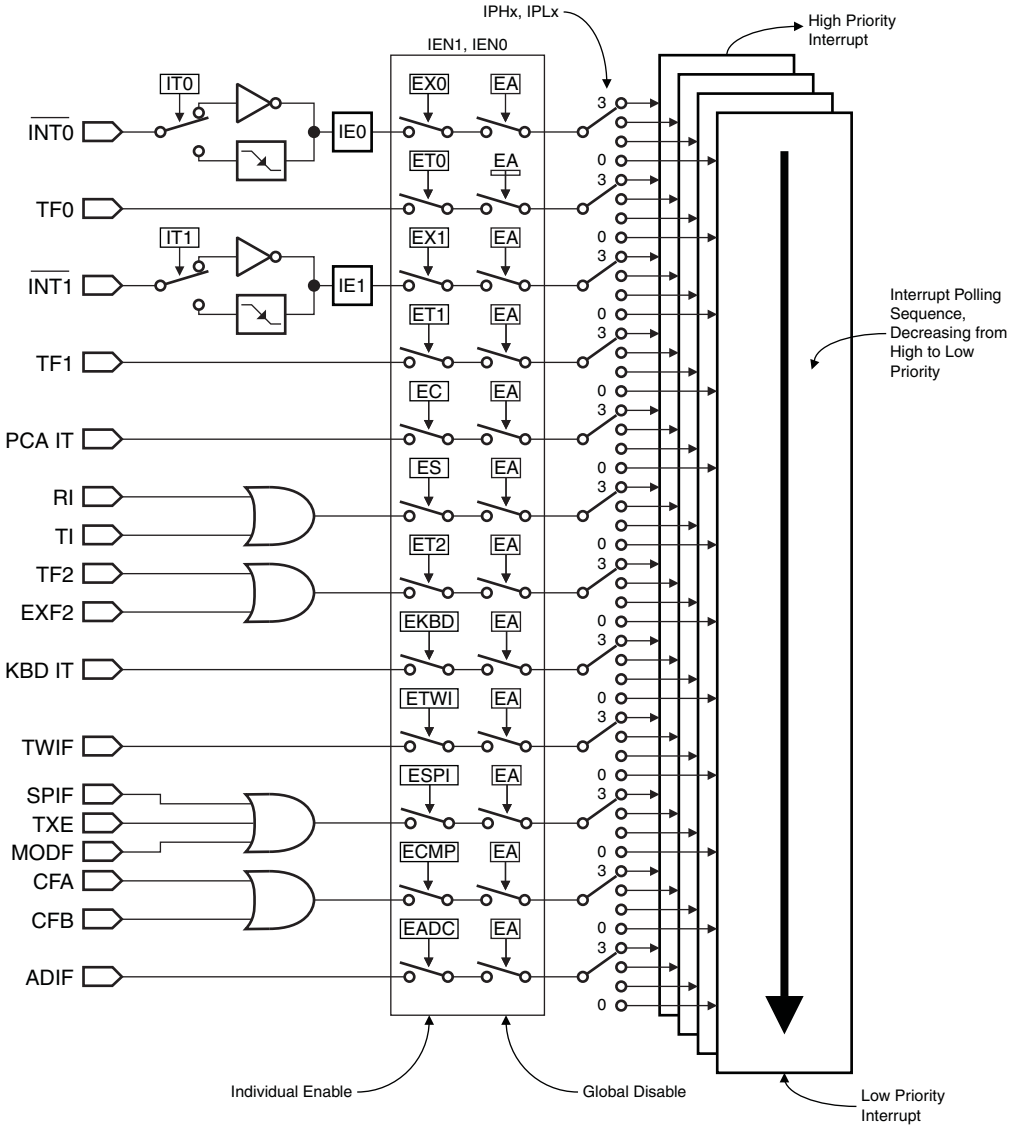

9.2 Interrupt Response

The interrupt flags may be set by their hardware in any clock cycle. The interrupt controller polls the flags in the last clock cycle of the instruction in progress. If one of the flags was set in the preceding cycle, the polling cycle will find it and the interrupt system will generate an LCALL to the appropriate service routine as the next instruction, provided that the interrupt is not blocked by any of the following conditions:

- An interrupt of equal or higher priority level is already in progress
- The instruction in progress is RETI or any write to the IENx, IPLx or IPHx registers

Each of these conditions will block the generation of the LCALL to the interrupt service routine. The second condition ensures that if the instruction in progress is RETI or any access to IENx, IPLx or IPHx, then at least one more instruction will be executed before any interrupt is vectored to. The polling cycle is repeated at the last cycle of each instruction, and the values polled are the values that were present at the previous clock cycle. If an active interrupt flag is not being serviced because of one of the above conditions and is no longer active when the blocking condition is removed, the denied interrupt will not be serviced. In other words, the fact that the interrupt flag was once active but not serviced is not remembered. Every polling cycle is new.

If a request is active and conditions are met for it to be acknowledged, a hardware subroutine call to the requested service routine will be the next instruction executed. The call itself takes four cycles. Thus, a minimum of five complete clock cycles elapsed between activation of an interrupt request and the beginning of execution of the first instruction of the service routine. A longer response time results if the request is blocked by one of the previously listed conditions. If an interrupt of equal or higher priority level is already in progress, the additional wait time depends on the nature of the other interrupt's service routine. If the instruction in progress is not in its final clock cycle, the additional wait time cannot be more than 4 cycles, since the longest instruction is 5 cycles long. If the instruction in progress is RETI, the additional wait time cannot be more than 9 cycles (a maximum of 4 more cycles to complete the instruction in progress, plus a maximum of 5 cycles to complete the next instruction). Thus, in a single-interrupt system, the response time is always more than 5 clock cycles and less than 14 clock cycles. See Figure 9-2 and Figure 9-3.

When an interrupt is serviced, its interrupt flag must be cleared before the RETI instruction or else the interrupt will continue to be generated. Many interrupt vectors have multiple sources. The service routine normally must determine which flag bit generated the interrupt and that bit must be cleared by software. If multiple source bits are set for one interrupt, the interrupt will continue to be generated until all the source bits have been cleared. In some cases the interrupt flags is cleared by hardware when the interrupt is acknowledged.

The External Interrupts $\overline{\text{INT0}}$ and $\overline{\text{INT1}}$ can each be either level-activated or edge-activated, depending on bits IT0 and IT1 in Register TCON. The flags that actually generate these interrupts are the IE0 and IE1 bits in TCON. When the service routine is vectored to, hardware clears the flag that generated an external interrupt only if the interrupt was edge-activated. If the interrupt was level activated, then the external requesting source (rather than the on-chip hardware) controls the request flag. The Timer 0 and Timer 1 Interrupts are generated by TF0 and TF1, which are set by a rollover in their respective Timers). When a timer interrupt is generated, the on-chip hardware clears the flag that generated it when the service routine is vectored to. All other flags must be cleared by software.

Figure 9-2. Minimum Interrupt Response Time (Fast Mode)

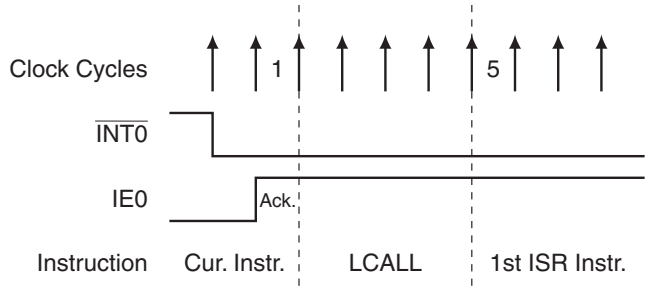

Figure 9-3. Maximum Interrupt Response Time (Fast Mode)

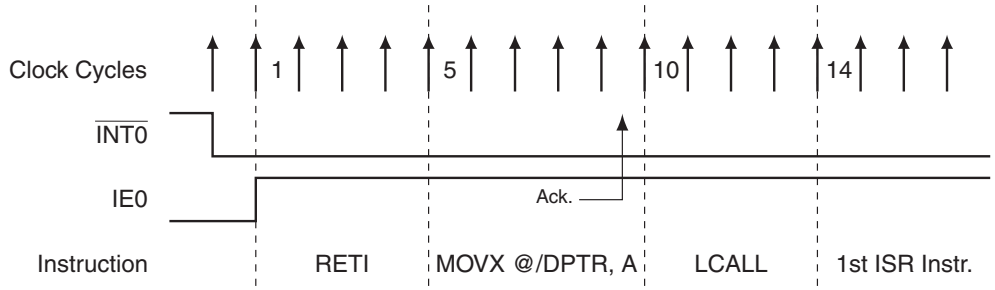

Figure 9-4. Minimum Interrupt Response Time (Compatibility Mode)

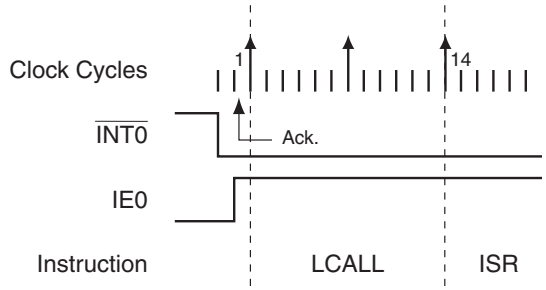

Figure 9-5. Maximum Interrupt Response Time (Compatibility Mode)

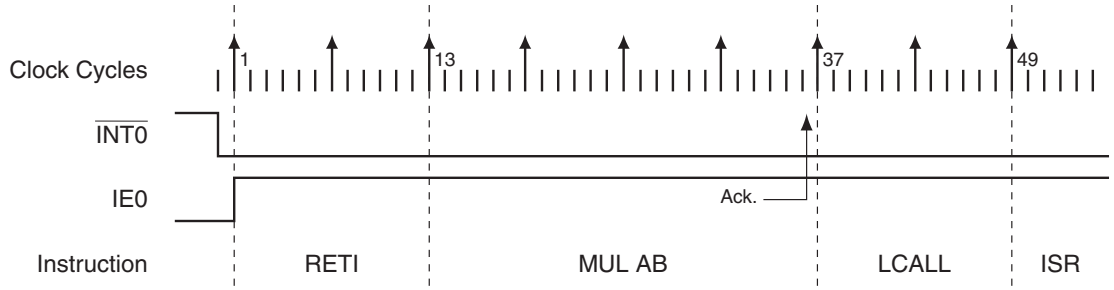

9.3 Interrupt Registers

Table 9-3. IEN0 – Interrupt Enable Register 0

IEN0 = A8H — Reset Value = 0000 0000B

Bit Addressable

	EA	EC	ET2	ES	ET1	EX1	ET0	EX0
Bit	7	6	5	4	3	2	1	0

Symbol	Function
EA	**Global Interrupt Enable** All interrupts are disabled when EA = 0. When EA = 1, each interrupt source is enabled/disabled by setting /clearing its own enable bit.
EC	**PCA Interrupt Enable** Clear to disable the PCA interrupt. Set to enable the PCA interrupt when EA = 1.
ET2	**Timer 2 Interrupt Enable** Clear to disable the Timer 2 interrupt. Set to enable the Timer 2 interrupt when EA = 1.
ES	**Serial Port Interrupt Enable** Clear to disable the UART interrupt. Set to enable the UART interrupt when EA = 1.
ET1	**Timer 1 Interrupt Enable** Clear to disable the Timer 1 interrupt. Set to enable the Timer 1 interrupt when EA = 1.
EX1	**External Interrupt 1 Enable.** Clear to disable the $\overline{INT1}$ interrupt. Set to enable the $\overline{INT1}$ interrupt when EA = 1.
ET0	**Timer 0 Interrupt Enable** Clear to disable the Timer 0 interrupt. Set to enable the Timer 0 interrupt when EA = 1.
EX0	**External Interrupt 0 Enable** Clear to disable the $\overline{INT0}$ interrupt. Set to enable the $\overline{INT0}$ interrupt when EA = 1.

Table 9-4. IEN1 – Interrupt Enable Register 1

IEN1 = B1H — Reset Value = 0000 0000B

Bit Addressable

	–	–	EADC	ECMP	–	ESPI	ETWI	EKBD
Bit	7	6	5	4	3	2	1	0

Symbol	Function
EADC	**ADC Interrupt Enable.** Clear to disable the ADC interrupt. Set to enable the ADC interrupt when EA = 1.
ECMP	**Analog COmparator Interrupt Enable** Clear to disable the Analog Comparator interrupt. Set to enable the Analog Comparator interrupt when EA = 1.
ESPI	**SPI Interrupt Enable** Clear to disable the SPI interrupt. Set to enable the SPI interrupt when EA = 1.
ETWI	**TWI Interrupt Enable** Clear to disable the TWI interrupt. Set to enable the TWI interrupt when EA = 1.
EKBD	**Keyboard Interrupt Enable** Clear to disable the Keyboard interrupt. Set to enable the Keyboard interrupt when EA = 1.

Table 9-5. IPL0 – Interrupt Priority Low Register 0

IPL0 = B8H — Reset Value = 0000 0000B

Bit Addressable

	IP0DIS	PPCL	PT2L	PSL	PT1L	PX1L	PT0L	PX0L
Bit	7	6	5	4	3	2	1	0

Symbol	Function
IP0DIS	**Interrupt Level 0 Disable** Clear to enable all interrupts with priority level 0. Set to disable all interrupts with priority level 0.
PPCL	**PCA Interrupt Priority Low** Low order bit for PCA interrupt priority level.
PT2L	**Timer 2 Interrupt Priority Low** Low order bit for Timer 2 interrupt priority level.
PSL	**Serial Port Interrupt Priority Low** Low order bit for UART interrupt priority level.
PT1L	**Timer 1 Interrupt Priority Low** Low order bit for Timer 1 interrupt priority level.
PX1L	**External Interrupt 1 Priority Low** Low order bit for $\overline{\text{INT1}}$ interrupt priority level.
PT0L	**Timer 0 Interrupt Priority Low** Low order bit for Timer 0 interrupt priority level.
PX0L	**External Interrupt 0 Priority Low** Low order bit for $\overline{\text{INT0}}$ interrupt priority level.

Table 9-6. IPL1 – Interrupt Priority Low Register 1

IPL1 = B2H — Reset Value = 0000 0000B

Bit Addressable

	IP2DIS	–	PADCL	PCMPL	–	PSPL	PTWL	PKBL
Bit	7	6	5	4	3	2	1	0

Symbol	Function
IP2DIS	**Interrupt Level 2 Disable** Clear to enable all interrupts with priority level 2. Set to disable all interrupts with priority level 2.
PADCL	**ADC Interrupt Priority Low** Low order bit for ADC interrupt priority level.
PCMPL	**Analog Comparator Interrupt Priority Low** Low order bit for Analog Comparator interrupt priority level.
PSPL	**SPI Interrupt Priority Low** Low order bit for SPI interrupt priority level.
PTWL	**TWI Interrupt Priority Low** Low order bit for TWI interrupt priority level.
PKBL	**Keyboard Interrupt Priority Low** Low order bit for Keyboard interrupt priority level.

Table 9-7. IPH0 – Interrupt Priority High Register 0

IPH0 = B7H — Reset Value = 0000 0000B

Not Bit Addressable

	IP1DIS	PPCH	PT2H	PSH	PT1H	PX1H	PT0H	PX0H
Bit	7	6	5	4	3	2	1	0

Symbol	Function
IP1DIS	**Interrupt Level 1 Disable** Clear to enable all interrupts with priority level 1. Set to disable all interrupts with priority level 1.
PPCH	**PCA Interrupt Priority High** High order bit for PCA interrupt priority level.
PT2H	**Timer 2 Interrupt Priority High** High order bit for Timer 2 interrupt priority level.
PSH	**Serial Port Interrupt Priority High** High order bit for UART interrupt priority level.
PT1H	**Timer 1 Interrupt Priority High** High order bit for Timer 1 interrupt priority level.
PX1H	**External Interrupt 1 Priority High** High order bit for $\overline{\text{INT1}}$ interrupt priority level.
PT0H	**Timer 0 Interrupt Priority High** High order bit for Timer 0 interrupt priority level.
PX0H	**External Interrupt 0 Priority High** High order bit for $\overline{\text{INT0}}$ interrupt priority level.

Table 9-8. IPH1 – Interrupt Priority High Register 1

IPH1 = B3H — Reset Value = 0000 0000B

Not Bit Addressable

	IP3DIS	–	PADCH	PCMPH	–	PSPH	PTWH	PKBH
Bit	7	6	5	4	3	2	1	0

Symbol	Function
IP3DIS	**Interrupt Level 3 Disable** Clear to enable all interrupts with priority level 3. Set to disable all interrupts with priority level 3.
PADCH	**ADC Interrupt Priority High** High order bit for ADC interrupt priority level.
PCMPH	**Analog Comparator Interrupt Priority High** High order bit for Analog Comparator interrupt priority level.
PSPH	**SPI Interrupt Priority High** High order bit for SPI interrupt priority level.
PTWH	**TWI Interrupt Priority High** High order bit for TWI interrupt priority level.
PKBH	**Keyboard Interrupt Priority High** High order bit for Keyboard interrupt priority level.

10. External Interrupts

The $\overline{INT0}$ (P3.2) and $\overline{INT1}$ (P3.3) pins of the AT89LP51RB2/RC2/IC2 may be used as external interrupt sources. The external interrupts can be programmed to be level-activated or transition-activated by setting or clearing bit IT1 or IT0 in Register TCON. If ITx = 0, external interrupt x is triggered by a detected low at the $\overline{INTx}$ pin. If ITx = 1, external interrupt x is edge-triggered. In this mode if successive samples of the $\overline{INTx}$ pin show a high in one cycle and a low in the next cycle, interrupt request flag IEx in TCON is set. Flag bit IEx then requests the interrupt.

Since the external interrupt pins are sampled once each clock cycle, an input high or low should hold for at least 2 system periods to ensure sampling. If the external interrupt is transition-activated, the external source has to hold the request pin high for at least two clock cycles, and then hold it low for at least two clock cycles to ensure that the transition is seen so that interrupt request flag IEx will be set. IEx will be automatically cleared by the CPU when the service routine is called if generated in edge-triggered mode. If the external interrupt is level-activated, the external source has to hold the request active until the requested interrupt is actually generated. Then the external source must deactivate the request before the interrupt service routine is completed, or else another interrupt will be generated. Both $\overline{INT0}$ and $\overline{INT1}$ may wake up the device from the Power-down state.

Other peripheral pins can also generate interrupts in response to an external event:

- A negative edge on the T2EX pin (P1.1) can set the EXF2 flag in T2CON
- Transitions on the PCA capture inputs CEX0–CEX4 (P1.3–7) can set the CCFx bits in CCON
- Transitions or levels on Port 1 can set the bits in KBF using the keyboard interface (see next section).

11. Keyboard Interface and General-purpose Interrupts

The AT89LP51RB2/RC2/IC2 implements a keyboard interface allowing the connection of a 1 x n to 8 x n matrix keyboard. The keyboard function provides 8 configurable external interrupts on Port 1. Each port pin can detect high/low levels or positive/negative edges. The keyboard inputs are considered as 8 independent interrupt sources sharing the same interrupt vector. The KBE register selects which bits of Port 1 are enabled to generate an interrupt. The KBMOD and KBLS registers determine the mode for each individual pin. KBMOD selects between level-sensitive and edge-triggered mode. KBLS selects between high/low in level mode and positive/negative in edge mode. A block diagram is shown in Figure 11-1.

The pins of Port 1 are sampled every clock cycle. In level-sensitive mode, a valid level must appear in two successive samples before generating the interrupt. In edge-triggered mode, a transition will be detected if the value changes from one sample to the next. When an interrupt condition on a pin is detected, and that pin is enabled, the appropriate flag in the KBF register is set. The flags in KBF must be cleared by software. Any enabled keyboard interrupt may wake up the device from the Idle or Power-down state.

Unlike AT89C51RB2/RC2/IC2 the flags in KBF are not cleared by reading the register. The software may clear each bit individually or all at once. This allows the interface to be used for general purpose external interrupts where some flags can be left pending between calls to the service routine. Each flag can also be made pending by software by writing a one to it. To achieve the same behavior as AT89C51RB2/RC2/IC2, the service routine must clear the entire register.

Figure 11-1. Keyboard Block Diagram

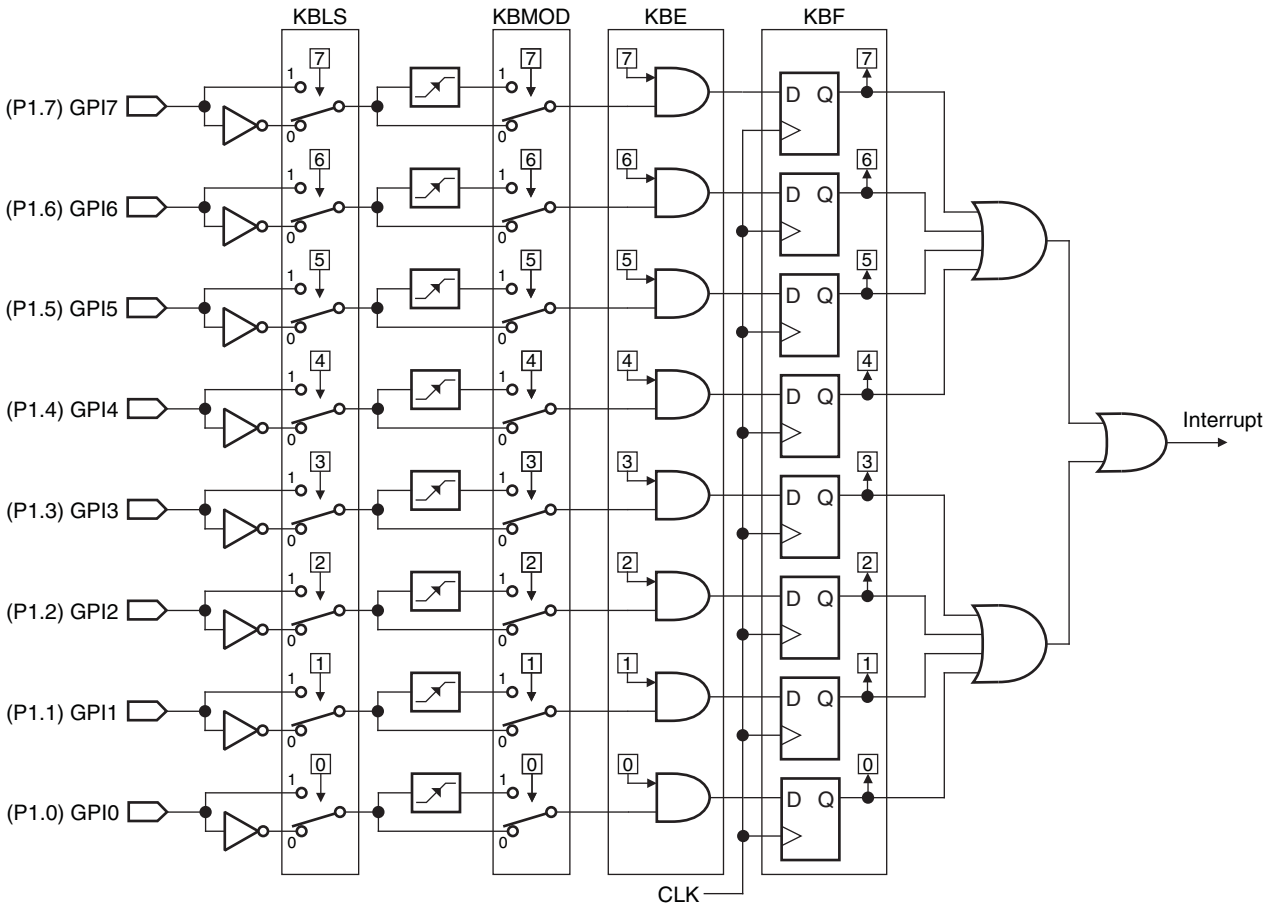

11.1 Registers

Table 11-1. KBMOD – Keyboard Mode Register

KBMOD = 9FH — Reset Value = 0000 0000B

Not Bit Addressable

	KBMOD7	KBMOD6	KBMOD5	KBMOD4	KBMOD3	KBMOD2	KBMOD1	KBMOD0
Bit	7	6	5	4	3	2	1	0

KBMOD.x 0 = level-sensitive interrupt for P1.x

1 = edge-triggered interrupt for P1.x

Table 11-2. KBLS – Keyboard Level Select Register

KBLS = 9CH — Reset Value = 0000 0000B

Not Bit Addressable

	KBLS7	KBLS6	KBLS5	KBLS4	KBLS3	KBLS2	KBLS1	KBLS0
Bit	7	6	5	4	3	2	1	0

KBLS.x 0 = detect low level or negative edge on P1.x

1 = detect high level or positive edge on P1.x

Table 11-3. KBE – Keyboard Interrupt Enable Register

KBE = 9DH — Reset Value = 0000 0000B

Not Bit Addressable

	KBE7	KBE6	KBE5	KBE4	KBE3	KBE2	KBE1	KBE0
Bit	7	6	5	4	3	2	1	0

KBE.x 0 = interrupt for P1.x disabled

1 = interrupt for P1.x enabled

Table 11-4. KBF – Keyboard Interrupt Flag Register

KBF = 9EH — Reset Value = 0000 0000B

Not Bit Addressable

	KBF7	KBF6	KBF5	KBF4	KBF3	KBF2	KBF1	KBF0
Bit	7	6	5	4	3	2	1	0

KBF.x 0 = interrupt on P1.x inactive

1 = interrupt on P1.x active. Must be cleared by software.

12. I/O Ports

The AT89LP51RB2/RC2/IC2 can be configured for between 36 and 40 I/O pins. The exact number of general I/O pins available depends on the clock and external memory configuration as shown in Table 12-1.

Table 12-1. AT89LP51RB2/RC2 I/O Pin Configurations

Clock Source A	External Program Access	External Data Access	Number of I/O Pins
External Crystal or Resonator	Yes (PSEN+ALE+P0+P2)	Yes (RD+WR)	18
		No	20
	No	8-bit (ALE+RD+WR+P0)	27
		16-bit (ALE+RD+WR+P0)	19
		No	38
External Clock	Yes (PSEN+ALE+P0+P2)	Yes (RD+WR)	19
		No	21
	No	8-bit (ALE+RD+WR+P0)	28
		16-bit (ALE+RD+WR+P0+P2)	20
		No	39
Internal RC Oscillator	Yes (PSEN+ALE+P0+P2)	Yes (RD+WR)	20
		No	22
	No	8-bit (ALE+RD+WR+P0)	29
		16-bit (ALE+RD+WR+P0+P2)	21
		No	40

Note: On AT89LP51IC2 OSCB requires 0, 1 or 2 I/O pins depending on the Clock Source B setting. Disabling OSCB (OscbEn = 0) frees up the OSCB pins for general use. Disabling OSCA (OscAEn = 0) does NOT free up the OSCA pins. OSCA must be configured for Internal RC mode to use these pins even when running from OSCB only.

12.1 Port Configuration

All port pins on the AT89LP51RB2/RC2/IC2 may be configured in one of four modes: quasi-bidirectional (standard 8051 port outputs), push-pull output, open-drain output, or input-only. Port modes may be assigned in software on a pin-by-pin basis as shown in Table 12-2 using the registers listed in Table 12-3. The Tristate-Port User Fuse (See Section 24.2 on page 188) determines the default state of the port pins. When the fuse is enabled, all port pins on P1, P2 and P3 default to input-only mode after reset. When the fuse is disabled, all port pins on P1, P2 and P3 default to quasi-bidirectional mode after reset and are weakly pulled high. P0 always defaults to open-drain mode. P4.4–5 always default to quasi-bidirectional mode. P4.0–1 always default to open-drain. The other pins of P4 obey the fuse.

Each port pin also has a Schmitt-triggered input for improved input noise rejection. During Power-down all the Schmitt-triggered inputs are disabled with the exception of P3.2 ($\overline{INT0}$), P3.3 ($\overline{INT1}$), RST, P4.6 (XTAL1) and P4.7 (XTAL2). Therefore, P3.2, P3.3, P4.6 and P4.7 should not be left floating during Power-down. n addition any pin of Port 1 configured as a keyboard interrupt input will also remain active during Power-down to wake-up the device. These interrupt pins should either be disabled before entering Power-down or they should not be left floating.

Table 12-2. Configuration Modes for Port x Pin y

PxM0.y	PxM1.y	Port Mode
0	0	Quasi-bidirectional
0	1	Push-pull Output
1	0	Input Only (High Impedance)
1	1	Open-Drain Output

Table 12-3. Port Configuration Registers

Port	Port Data	Port Configuration
0	P0 (80H)	P0M0 (D4H), P0M1 (D5H)
1	P1 (90H)	P1M0 (E6H), P1M1 (E7H)
2	P2 (A0H)	P2M0 (D6H), P2M1 (D7H)
3	P3 (B0H)	P3M0 (DEH), P3M1 (CFH)
4	P4 (C0H)	P4M0 (BEH), P4M1 (BFH)

Table 12-4. Port Configuration Reset Values

Register	Tristate Ports Fuse = FFH (1)	Tristate Ports Fuse = 00H (0)
P0M0	FF	FF
P0M1	FF	FF
P1M0	FF	00
P1M1	00	00
P2M0	FF	00
P2M1	00	00
P3M0	FF	00
P3M1	00	00
P4M0	C7	03
P4M0	03	03

12.1.1 Quasi-bidirectional Output

Port pins in quasi-bidirectional output mode function similar to standard 8051 port pins. A Quasi-bidirectional port can be used both as an input and output without the need to reconfigure the port. This is possible because when the port outputs a logic high, it is weakly driven, allowing an external device to pull the pin low. When the pin is driven low, it is driven strongly and able to sink a large current. There are three pull-up transistors in the quasi-bidirectional output that serve different purposes.

One of these pull-ups, called the “very weak” pull-up, is turned on whenever the port latch for the pin contains a logic “1”. This very weak pull-up sources a very small current that will pull the pin high if it is left floating. When the pin is pulled low externally this pull-up will always source some current. The very weak pull-up is disabled when the port register contains a zero. In addition the very weak pull-ups of all quasi-bidirectional ports can be disabled globally by setting the DPU bit in the AUXR register (See Table 3-2 on page 19).

A second pull-up, called the “weak” pull-up, is turned on when the port latch for the pin contains a logic “1” and the pin itself is also at a logic “1” level. This pull-up provides the primary source current for a quasi-bidirectional pin that is outputting a “1”. If this pin is pulled low by an external device, this weak pull-up turns off, and only the very weak pull-up remains on. In order to pull the pin low under these conditions, the external device has to sink enough current to overpower the weak pull-up and pull the port pin below its input threshold voltage.

The third pull-up is referred to as the “strong” pull-up. This pull-up is used to speed up low-to-high transitions on a quasi-bidirectional port pin when the port latch changes from a logic “0” to a logic “1”. When this occurs, the strong pull-up turns on for one CPU clock, quickly pulling the port pin high. The quasi-bidirectional port configuration is shown in Figure 12-1.

12.1.2 Input-only Mode

The input only port configuration is shown in Figure 12-2. The output drivers are tristated. The input includes a Schmitt-triggered input for improved input noise rejection. The input circuitry of P3.2, P3.3, P4.6 and P4.7 is not disabled during Power-down (see Figure 12-3) and therefore these pins should not be left floating during Power-down when configured in this mode.

Input-only mode can reduce power consumption for low-level inputs over quasi-bidirectional mode because the “very weak” pull-up is turned off and only very small leakage current in the sub microamp range is present.

Figure 12-1. Quasi-bidirectional Output

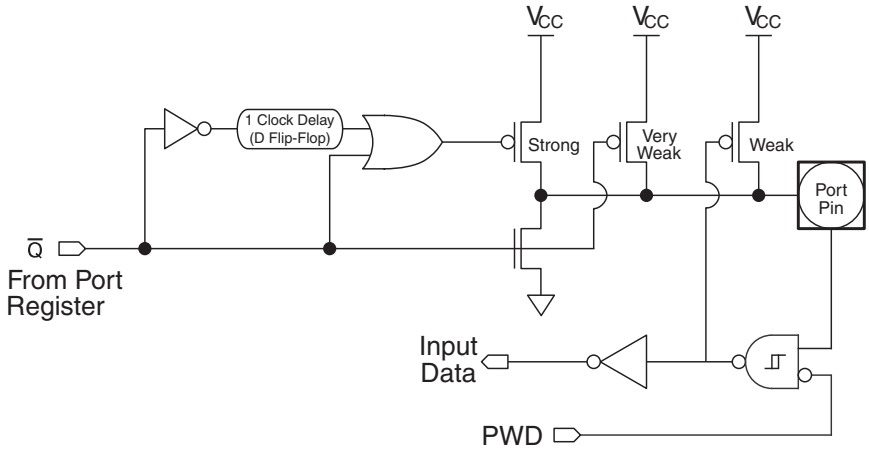

Figure 12-2. Input Only

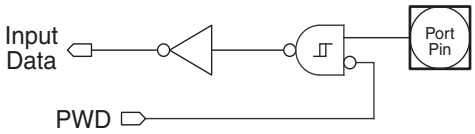

Figure 12-3. Input Circuit for P3.2, P3.3, P4.6 and P4.7

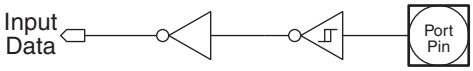

12.1.3 Open-drain Output

The open-drain output configuration turns off all pull-ups and only drives the pull-down transistor of the port pin when the port latch contains a logic “0”. To be used as a logic output, a port configured in this manner must have an external pull-up, typically a resistor tied to V_{DD}. The pull-down for this mode is the same as for the quasi-bidirectional mode. The open-drain port configuration is shown in Figure 12-4. The input circuitry of P3.2, P3.3, P4.6 and P4.7 is not disabled during Power-down (see Figure 12-3) and therefore these pins should not be left floating during Power-down when configured in this mode.

Figure 12-4. Open-Drain Output

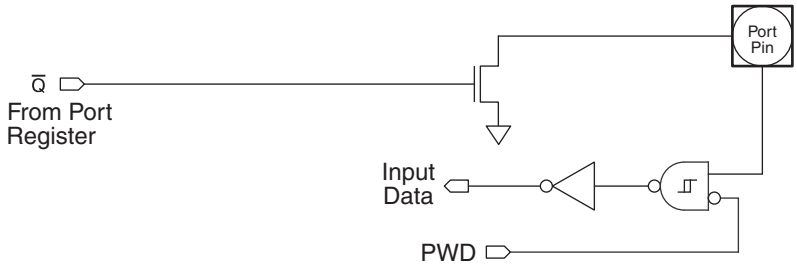

12.1.4 Push-pull Output

The push-pull output configuration has the same pull-down structure as both the open-drain and the quasi-bidirectional output modes, but provides a continuous strong pull-up when the port latch contains a logic “1”. The push-pull mode may be used when more source current is needed from a port output. The push-pull port configuration is shown in Figure 12-5.

Figure 12-5. Push-pull Output

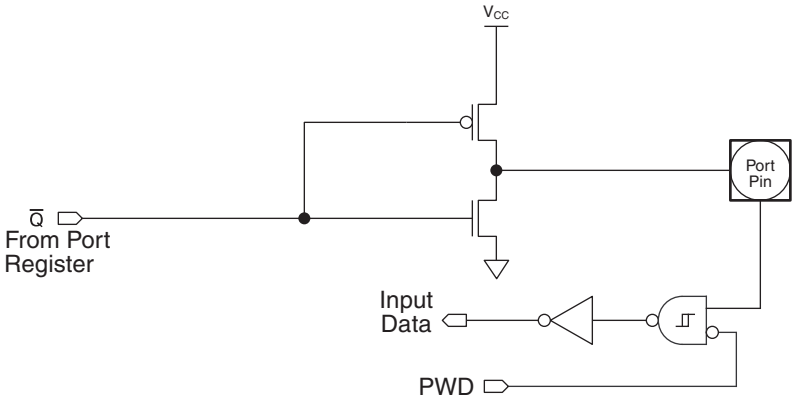

12.2 Port Analog Functions

The AT89LP51RB2/RC2/IC2 incorporates two analog comparators and an 8-channel analog-to-digital converter. In order to give the best analog performance and minimize power consumption, pins that are being used for analog functions must have both their digital outputs and digital inputs disabled. Digital outputs are disabled by putting the port pins into the input-only mode as described in “Port Configuration” on page 69. The analog input pins will always default to input-only mode after reset regardless of the state of the Tristate-Port Fuse.

Digital inputs on P2.4, P2.5, P2.6 and P2.7 are disabled whenever an analog comparator is enabled by setting the CENA or CENB bits in ACSRA and ACSRB and that pin is configured for input-only mode. To use an analog input pin as a high-impedance digital input while a comparator is enabled, that pin should be configured in open-drain mode and the corresponding port register bit should be set to 1.

Digital inputs on Port 0 are disabled for each pin configured for input-only mode whenever the ADC is enabled by setting the ADCE bit and clearing the DAC bit in DADC. To use any Port 0 input pin as a high-impedance digital input while the ADC is enabled, that pin should be configured in open-drain mode and the corresponding port register bit should be set to 1. When DAC mode is enabled, P2.2 and P2.3 are forced to input-only mode.

12.3 Port Read-Modify-Write

A read from a port will read either the state of the pins or the state of the port register depending on which instruction is used. Simple read instructions will always access the port pins directly. Read-modify-write instructions, which read a value, possibly modify it, and then write it back, will always access the port register. This includes bit write instructions such as CLR or SETB as they actually read the entire port, modify a single bit, then write the data back to the entire port. See Table 12-5 for a complete list of Read-Modify-Write instruction which may access the ports.

Table 12-5. Port Read-Modify-Write Instructions

Mnemonic	Instruction	Example
ANL	Logical AND	ANL P1, A
ORL	Logical OR	ORL P1, A
XRL	Logical EX-OR	XRL P1, A
JBC	Jump if bit set and clear bit	JBC P3.0, LABEL
CPL	Complement bit	CPL P3.1
INC	Increment	INC P1
DEC	Decrement	DEC P3
DJNZ	Decrement and jump if not zero	DJNZ P3, LABEL
MOV PX.Y, C	Move carry to bit Y of Port X	MOV P1.0, C
CLR PX.Y	Clear bit Y of Port X	CLR P1.1
SETB PX.Y	Set bit Y of Port X	SETB P3.2

12.4 Port Alternate Functions

Most general-purpose digital I/O pins of the AT89LP51RB2/RC2/IC2 share functionality with the various I/Os needed for the peripheral units. Table 12-7 lists the alternate functions of the port pins. Alternate functions are connected to the pins in a logic AND fashion. In order to enable the alternate function on a port pin, that pin must have a “1” in its corresponding port register bit, otherwise the input/output will always be “0”. However, alternate functions may be temporarily forced to “0” by clearing the associated port bit, provided that the pin is not in input-only mode. Furthermore, each pin must be configured for the correct input/output mode as required by its peripheral before it may be used as such. Table 12-6 shows how to configure a generic pin for use with an alternate function. If two or more port pins on the same 8-bit require difference directions, the port must be configured for bidirectional operation.

Table 12-6. Pin Function Configurations for Port x Pin y

PxM0.y	PxM1.y	Px.y	I/O Mode
0	0	1	bidirectional (internal pull-up)
0	1	1	output
1	0	X	input
1	1	1	bidirectional (external pull-up)

Table 12-7. Port Pin Alternate Functions

Port Pin	Configuration Bits		Alternate Function	Notes
	PxM0.y	PxM1.y		
P0.0	P0M0.0	P0M1.0	AD0	Automatic configuration
			ADC0	input-only
P0.1	P0M0.1	P0M1.1	AD1	Automatic configuration
			ADC1	input-only
P0.2	P0M0.2	P0M1.2	AD2	Automatic configuration
			ADC2	input-only
P0.3	P0M0.3	P0M1.3	AD3	Automatic configuration
			ADC3	input-only
P0.4	P0M0.4	P0M1.4	AD4	Automatic configuration
			ADC4	input-only
P0.5	P0M0.5	P0M1.5	AD5	Automatic configuration
			ADC5	input-only
P0.6	P0M0.6	P0M1.6	AD6	Automatic configuration
			ADC6	input-only
P0.7	P0M0.7	P0M1.7	AD7	Automatic configuration
			ADC7	input-only
P1.0	P1M0.0	P1M1.0	T2	OSCB must be disabled or in internal oscillator mode (AT89LP51IC2)
			GPI0	
			XTAL1B	
P1.1	P1M0.1	P1M1.1	T2EX	
			$\overline{SS}$	REMAP = 0
			GPI1	
P1.2	P1M0.2	P1M1.2	ECI	
			GPI2	
P1.3	P1M0.3	P1M1.3	CEX0	
			GPI3	

Table 12-7. Port Pin Alternate Functions

Port Pin	Configuration Bits		Alternate Function	Notes
	PxM0.y	PxM1.y		
P1.4	P1M0.4	P1M1.4	$\overline{SS}$	REMAP = 1
			GPI4	
			CEX1	
P1.5	P1M0.5	P1M1.5	MISO	REMAP = 0
			MOSI	REMAP = 1
			CEX2	
			GPI5	
P1.6	P1M0.6	P1M1.6	SCK	REMAP = 0
			MISO	REMAP = 1
			CEX3	
			GPI6	
P1.7	P1M0.7	P1M1.7	MOSI	REMAP = 0
			SCK	REMAP = 1
			CEX4	
			GPI7	
P2.0	P2M0.0	P2M1.0	A8	
P2.1	P2M0.1	P2M1.1	A9	
P2.2	P2M0.2	P2M1.2	A10	
			DA+	input-only
P2.3	P2M0.3	P2M1.3	A11	
			DA-	input-only
P2.4	P2M0.4	P2M1.4	A12	
			AIN0	input-only
P2.5	P2M0.5	P2M1.5	A13	
			AIN1	input-only
P2.6	P2M0.6	P2M1.6	A14	
			AIN2	input-only
P2.7	P2M0.7	P2M1.7	A15	
			AIN3	input-only
P3.0	P3M0.0	P3M1.0	RXD	
P3.1	P3M0.1	P3M1.1	TXD	
P3.2	P3M0.2	P3M1.2	$\overline{INT0}$	
P3.3	P3M0.3	P3M1.3	$\overline{INT1}$	
P3.4	P3M0.4	P3M1.4	T0	
P3.5	P3M0.5	P3M1.5	T1	
P3.6	P3M0.6	P3M1.6	$\overline{WR}$	

Table 12-7. Port Pin Alternate Functions

Port Pin	Configuration Bits		Alternate Function	Notes
	PxM0.y	PxM1.y		
P3.7	P3M0.7	P3M1.7	$\overline{RD}$	
P4.0	P4M0.0	P4M1.0	SCL	open-drain
P4.1	P4M0.1	P4M1.1	SDA	open-drain
P4.2	P4M0.2	P4M1.2	XTAL2B	OSCB must be disabled or in internal oscillator or external clock modes to use P4.2(AT89LP51IC2)
P4.4	P4M0.4	P4M1.4	ALE	Set AO in AUXR to use P4.4
P4.5	P4M0.5	P4M1.5	$\overline{PSEN}$	
P4.6	P4M0.6	P4M1.6	XTAL1A	OSCA must be set to internal RC mode to use P4.6
P4.7	P4M0.7	P4M1.7	XTAL2A	OSCA must be set to internal RC or external clock modes to use P4.7

13. Enhanced Timer 0 and Timer 1 with PWM

The AT89LP51RB2/RC2/IC2 has two 16-bit Timer/Counters, Timer 0 and Timer 1, with the following features:

- Two 16-bit timer/counters with 16-bit reload registers
- Two independent 8-bit precision PWM outputs with 8-bit prescalers
- UART or SPI baud rate generation using Timer 1
- Output pin toggle on timer overflow
- Split timer mode allows for three separate timers (2 8-bit, 1 16-bit)
- Gated modes allow timers to run/halt based on an external input

Timer 0 and Timer 1 have similar modes of operation. As timers, the timer registers normally increase every clock cycle. Thus, the registers count clock cycles. The timer rate can be prescaled by a value between 1 and 16 using the Timer Prescaler (see Section 6.9 on page 48). Both Timers share the same prescaler. In Compatibility mode the prescaler is always enabled and TPS defaults to 5, so the timers count every six clock cycles (1/12 of the oscillator frequency in X1 mode or 1/6 of the oscillator frequency in X2 mode). In X2 mode the timers can be set to the X1 rate by setting the T0X2 or T1X2 bits in CKCON1. In Fast mode the prescaler is not enabled by default so the count rate is equal to the system frequency (1/2 of the oscillator frequency in X1 mode or equal to the oscillator frequency in X2 mode). In this case setting the T0X2 or T1X2 bits in CKCON1 enables the prescaler for each timer.

$$f_{TIMER} = \frac{f_{SYS}}{2^{TnX2} \times (TPS + 1)} \quad \text{Compatibility Mode}$$

$$f_{TIMER} = \frac{f_{SYS}}{TPS + 1} \quad \text{Fast Mode and TnX2 = 1}$$

$$f_{TIMER} = f_{SYS} \quad \text{Fast Mode and TnX2 = 0}$$

As counters, the timer registers are incremented in response to a 1-to-0 transition at the corresponding input pins, T0 or T1. In Fast mode the external input is sampled every clock cycle. When the samples show a high in one cycle and a low in the next cycle, the count is incremented. The new count value appears in the register during the cycle following the one in which the transition was detected. Since 2 clock cycles are required to recognize a 1-to-0 transition, the maximum count rate is 1/2 of the system frequency. There are no restrictions on the duty cycle of the input signal, but it should be held for at least one full clock cycle to ensure that a given level is sampled at least once before it changes.

In Compatibility mode the counter input sampling is controlled by the prescaler. Since TPS defaults to 6 in this mode, the pins are sampled every six system clocks. Therefore the input signal should be held for at least six clock cycles to ensure that a given level is sampled at least once before it changes.

Furthermore, the Timer or Counter functions for Timer 0 and Timer 1 have four operating modes: 13-bit timer, 16-bit timer, 8-bit auto-reload timer, and split timer. The control bits C/T in the Special Function Register TMOD select the Timer or Counter function. The bit pairs (M1, M0) in TMOD select the operating modes.

13.1 Registers

Table 13-1 lists the registers used by Timer 0/1. TCON, TCONB and TMOD are detailed below.

Table 13-1. Timer 0/1 Register Summary

Name	Address	Purpose	Bit-Addressable
TCON	88H	Control	Y
TMOD	89H	Mode	N
TL0	8AH	Timer 0 low-byte	N
TL1	8BH	Timer 1 low-byte	N
TH0	8CH	Timer 0 high-byte	N
TH1	8DH	Timer 1 high-byte	N
TCONB	91H	Mode	N
RL0	F2H	Timer 0 reload low-byte	N
RL1	F3H	Timer 1 reload low-byte	N
RH0	F4H	Timer 0 reload high-byte	N
RH1	F5H	Timer 1 reload high-byte	N

Note: The RHn/RLn registers are not required by the Timer during Modes 0, 2 or 3 and may be used as temporary storage registers in these modes, except when using the PWM generator.

Table 13-2. TCON – Timer/Counter Control Register

TCON = 88H Reset Value = 0000 0000B

Bit Addressable

	TF1	TR1	TF0	TR0	IE1	IT1	IE0	IT0
Bit	7	6	5	4	3	2	1	0

Symbol	Function
TF1	**Timer 1 Overflow Flag** Set by hardware on Timer/Counter overflow. Cleared by hardware when the processor vectors to interrupt routine.
TR1	**Timer 1 Run Control** Set/cleared by software to turn Timer/Counter on/off.
TF0	**Timer 0 Overflow Flag** Set by hardware on Timer/Counter overflow. Cleared by hardware when the processor vectors to interrupt routine.
TR0	**Timer 0 Run Control** Set/cleared by software to turn Timer/Counter on/off.
IE1	**Interrupt 1 Edge Flag** Set by hardware when external interrupt edge detected. Cleared when interrupt processed.
IT1	**Interrupt 1 Type** Set/cleared by software to specify falling edge/low level triggered external interrupts.
IE0	**Interrupt 0 Edge Flag** Set by hardware when external interrupt edge detected. Cleared when interrupt processed.
IT0	**Interrupt 0 Type** Set/cleared by software to specify falling edge/low level triggered external interrupts.

Table 13-3. TMOD – Timer/Counter Mode Control Register

TMOD Address = 089H — Reset Value = 0000 0000B

Not Bit Addressable

	GATE1	C/$\overline{T1}$	T1M1	T1M0	GATE0	C/$\overline{T0}$	T0M0	T0M1
Bit	7	6	5	4	3	2	1	0

Symbol	Function
GATE1	**Timer 1 Gating Control** When set, Timer/Counter 1 is enabled only while $\overline{INT1}$ pin is high and TR1 control pin is set. When cleared, Timer 1 is enabled whenever TR1 control bit is set.
C/$\overline{T1}$	**Timer or Counter Selector 1** Cleared for Timer operation (input from internal system clock). Set for Counter operation (input from T1 input pin). C/$\overline{T1}$ must be zero when using Timer 1 in PWM output mode.
T1M1 T1M0	**Timer 1 Operating Mode** **Mode** — **T1M1** — **T1M0** — **Operation** 0 — 0 — 0 — Variable Timer Mode. 8-bit Timer/Counter TH1 with TL1 as 1–8 bit prescaler. Default is 5 bits for a 13-bit timer/counter compatible with AT89C51RB2/RC2/IC2. 1 — 0 — 1 — 16-bit Auto-Reload Mode. TH1 and TL1 are cascaded to form a 16-bit Timer/Counter which is reloaded from RH1 and RL1 when it overflows. 2 — 1 — 0 — 8-bit Auto-Reload Mode. TH1 holds a value which is reloaded into 8-bit Timer/Counter TL1 each time it overflows. 3 — 1 — 1 — Timer/Counter 1 is stopped
GATE0	**Timer 0 Gating Control** When set, Timer/Counter 0 is enabled only while $\overline{INT0}$ pin is high and TR0 control pin is set. When cleared, Timer 0 is enabled whenever TR0 control bit is set.
C/$\overline{T0}$	**Timer or Counter Selector 0** Cleared for Timer operation (input from internal system clock). Set for Counter operation (input from T0 input pin). C/$\overline{T0}$ must be zero when using Timer 0 in PWM output mode.
T0M1 T0M0	**Timer 0 Operating Mode** **Mode** — **T0M1** — **T0M0** — **Operation** 0 — 0 — 0 — Variable Timer Mode. 8-bit Timer/Counter TH0 with TL0 as 1–8 bit prescaler. Default is 5 bits for a 13-bit timer/counter compatible with AT89C51RB2/RC2/IC2. 1 — 0 — 1 — 16-bit Auto-Reload Mode. TH0 and TL0 are cascaded to form a 16-bit Timer/Counter which is reloaded from RH0 and RL0 when it overflows. 2 — 1 — 0 — 8-bit Auto-Reload Mode. TH0 holds a value which is reloaded into 8-bit Timer/Counter TL0 each time it overflows. 3 — 1 — 1 — Split Timer Mode. TL0 is an 8-bit Timer/Counter controlled by the standard Timer 0 control bits. TH0 is only an 8-bit timer controlled by Timer 1 control bits.

Table 13-4. TCONB – Timer/Counter Control Register B

TCONB = 91H — Reset Value = 0010 0100B

Not Bit Addressable

	PWM1EN	PWM0EN	PSC12	PSC11	PSC10	PSC02	PSC01	PSC00
Bit	7	6	5	4	3	2	1	0

Symbol	Function
PWM1EN	**Pulse Width Modulation 1 Enable** Set to configure Timer 1 for Pulse Width Modulation output on T1 (P3.5). Clear to disable T1 as an output.
PWM0EN	**Pulse Width Modulation 0 Enable** Set to configure Timer 0 for Pulse Width Modulation output on T0 (P3.4). Clear to disable T0 as an output.
PSC12 PSC11 PSC10	**Timer 1 Prescaler** Prescaler for Timer 1 Mode 0. The number of active bits in TL1 equals PSC1 + 1. After reset PSC1 = 100B which enables 5 bits of TL1 for compatibility with the 13-bit Mode 0 in AT89C51RB2/RC2/IC2.
PSC02 PSC01 PSC00	**Timer 0 Prescaler** Prescaler for Timer 0 Mode 0. The number of active bits in TL0 equals PSC0 + 1. After reset PSC0 = 100B which enables 5 bits of TL0 for compatibility with the 13-bit Mode 0 in AT89C51RB2/RC2/IC2.

13.2 Mode 0 – Variable Width Timer/Counter

Both Timers in Mode 0 are 8-bit Counters with a variable prescaler. The prescaler may vary from 1 to 8 bits depending on the PSC bits in TCONB, giving the timer a range of 9 to 16 bits. By default the timer is configured as a 13-bit timer compatible to Mode 0 in the standard 8051. Figure 13-1 shows the Mode 0 operation as it applies to Timer 1 in 13-bit mode. As the count rolls over from all “1”s to all “0”s, it sets the Timer interrupt flag TF1. The counter input is enabled to the Timer when TR1 = 1 and either GATE1 = 0 or $\overline{\text{INT1}}$ = 1. Setting GATE1 = 1 allows the Timer to be controlled by external input $\overline{\text{INT1}}$, to facilitate pulse width measurements. TR1 is a control bit in the TCON register. GATE1 is in TMOD. The 13-bit register consists of all 8 bits of TH1 and the lower 5 bits of TL1. The upper 3 bits of TL1 are indeterminate and should be ignored. Setting the run flag (TR1) does not clear the registers.

The following equation gives the timeout period for Mode 0. In Fast Mode, TPS applies only when the TnX2 bits in CKCON0 are set. TPS always applies in Compatibility Mode, therefore setting TnX2 in Compatibility Mode will double the timeout period.

$$\text{Mode 0:} \qquad \text{Time-out Period} = \frac{256 \times 2^{\text{PSCn}+1}}{f_{\text{SYS}}} \times (\text{TPS} + 1)$$

Mode 0 operation is the same for Timer 0 as for Timer 1, except that TR0, TF0, GATE0 and $\overline{\text{INT0}}$ replace the corresponding Timer 1 signals in Figure 13-1. There are two different C/T bits, one for Timer 1 (TMOD.6) and one for Timer 0 (TMOD.2).

Figure 13-1. Timer/Counter 1 Mode 0: Variable Width Counter

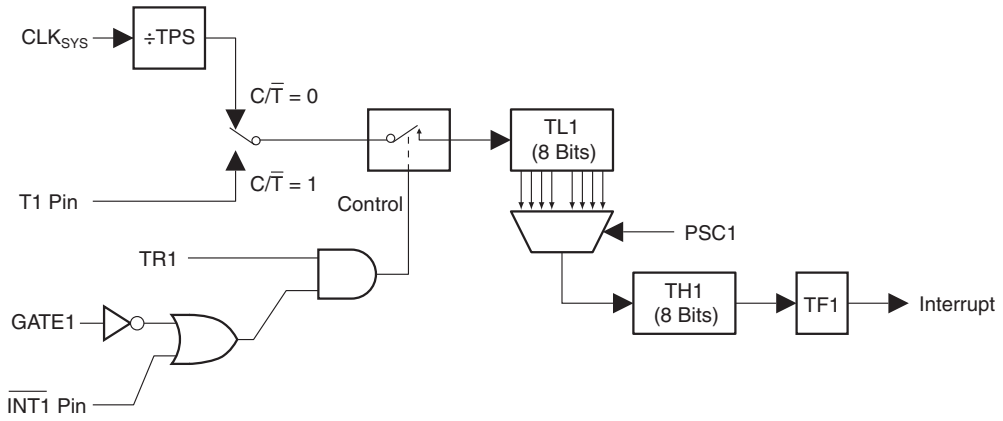

13.3 Mode 1 – 16-bit Auto-Reload Timer/Counter

In Mode 1 the Timers are configured for 16-bit auto-reload. The Timer register is run with all 16 bits. The 16-bit reload value is stored in the high and low reload registers (RH1/RL1). The clock is applied to the combined high and low timer registers (TH1/TL1). As clock pulses are received, the timer counts up: 0000H, 0001H, 0002H, etc. An overflow occurs on the FFFFH-to-0000H transition, upon which the timer register is reloaded with the value from RH1/RL1 and the overflow flag bit in TCON is set. See Figure 13-2. The reload registers default to 0000H, which gives the full 16-bit timer period compatible with the standard 8051. Mode 1 operation is the same for Timer/Counter 0.

The following equation gives the timeout period for Mode 1. In Fast Mode, TPS applies only when the TnX2 bits in CKCON0 are set. TPS always applies in Compatibility Mode, therefore setting TnX2 in Compatibility Mode will double the timeout period.

$$\text{Mode 1:} \qquad \text{Time-out Period} = \frac{(65536 - \{RHn, RLn\})}{f_{SYS}} \times (TPS + 1)$$

Figure 13-2. Timer/Counter 1 Mode 1: 16-bit Auto-Reload

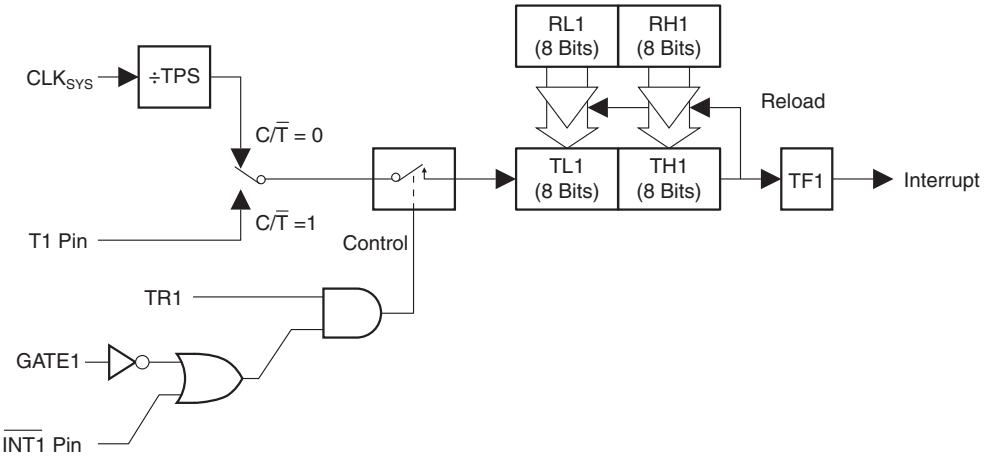

13.4 Mode 2 – 8-bit Auto-Reload Timer/Counter

Mode 2 configures the Timer register as an 8-bit Counter (TL1) with automatic reload, as shown in Figure 13-3. Overflow from TL1 not only sets TF1, but also reloads TL1 with the contents of TH1, which is preset by software. The reload leaves TH1 unchanged. Mode 2 operation is the same for Timer/Counter 0.

The following equation gives the timeout period for Mode 2. In Fast Mode, TPS applies only when the TnX2 bits in CKCON0 are set. TPS always applies in Compatibility Mode, therefore setting TnX2 in Compatibility Mode will double the timeout period.

$$\text{Mode 2:} \qquad \text{Time-out Period} = \frac{(256 - \text{THn})}{f_{SYS}} \times (\text{TPS} + 1)$$

Figure 13-3. Timer/Counter 1 Mode 2: 8-bit Auto-Reload

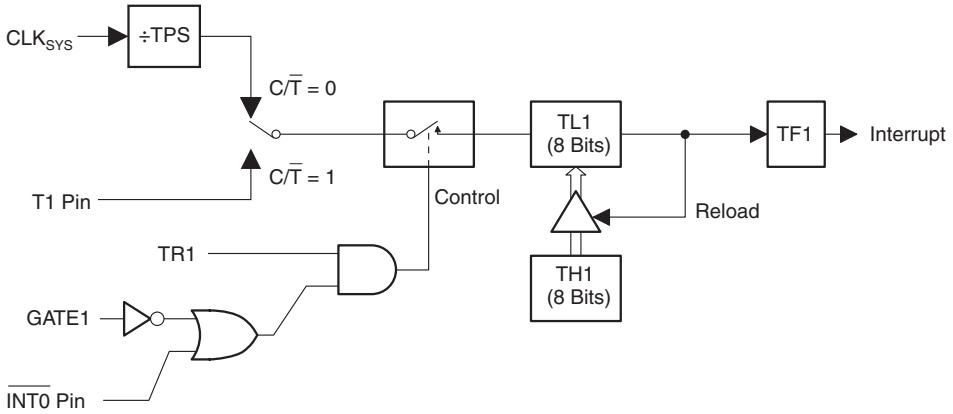

Note: RH1/RL1 are not required by Timer 1 during Mode 2 and may be used as temporary storage registers.

13.5 Mode 3 – 8-bit Split Timer

Timer 1 in Mode 3 simply holds its count. The effect is the same as setting TR1 = 0. Timer 0 in Mode 3 establishes TL0 and TH0 as two separate counters. The logic for Mode 3 on Timer 0 is shown in Figure 13-4. TL0 uses the Timer 0 control bits: C/T, GATE0, TR0, $\overline{\text{INT0}}$, and TF0. TH0 is locked into a timer function (counting clock cycles) and takes over the use of TR1 and TF1 from Timer 1. Thus, TH0 now controls the Timer 1 interrupt. While Timer 0 is in Mode 3, Timer 1 will still obey its settings in TMOD but cannot generate an interrupt.

Mode 3 is for applications requiring an extra 8-bit timer or counter. With Timer 0 in Mode 3, the AT89LP51RB2/RC2/IC2 can appear to have four Timer/Counters. When Timer 0 is in Mode 3, Timer 1 can be turned on and off by switching it out of and into its own Mode 3. In this case, Timer 1 can still be used by the serial port as a baud rate generator or in any application not requiring an interrupt.

The following equation gives the timeout period for Mode 3. In Fast Mode, TPS applies only when the TnX2 bits in CKCON0 are set. TPS always applies in Compatibility Mode, therefore setting TnX2 in Compatibility Mode will double the timeout period.

$$\text{Mode 3:} \qquad \text{Time-out Period} = \frac{256}{f_{SYS}} \times (\text{TPS} + 1)$$

Figure 13-4. Timer/Counter 0 Mode 3: Two 8-bit Counters

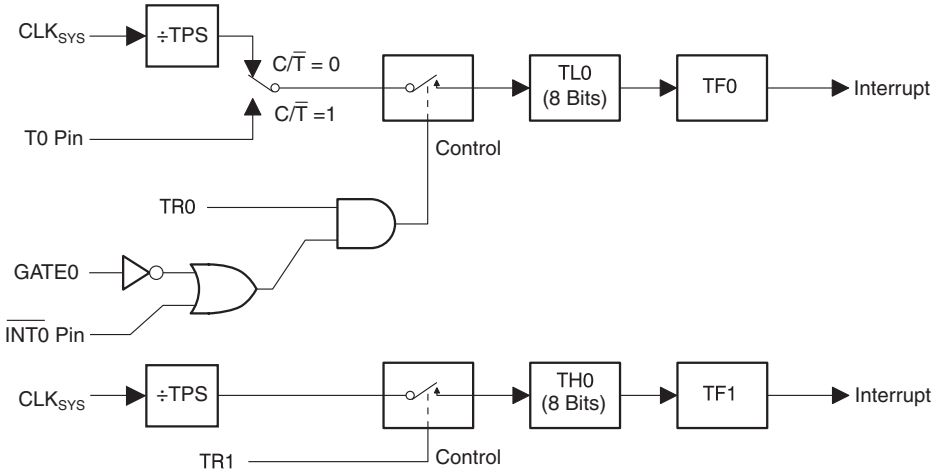

13.6 Pulse Width Modulation

On the AT89LP51RB2/RC2/IC2, Timer 0 and Timer 1 may be independently configured as 8-bit asymmetrical (edge-aligned) pulse width modulators (PWM) by setting the PWM0EN or PWM1EN bits in TCONB, respectively. In PWM Mode the generated waveform is output on the timer's input pin, T0 or T1. Therefore, C/$\overline{T}$x must be set to “0” when in PWM mode and the T0 (P3.4) and T1 (P3.5) must be configured in an output mode. The Timer Overflow Flags and Interrupts will continue to function while in PWM Mode and Timer 1 may still generate the baud rate for the UART. The timer GATE function also works in PWM mode, allowing the output to be halted by an external input. Each PWM channel has four modes selected by the mode bits in TMOD.

An example waveform for Timer 0 in PWM Mode 0 is shown in Figure 13-5. TH0 acts as an 8-bit counter while RH0 stores the 8-bit compare value. When TH0 is 00H the PWM output is set high. When the TH0 count reaches the value stored in RH0 the PWM output is set low. Therefore, the pulse width is proportional to the value in RH0. To prevent glitches, writes to RH0 only take effect on the FFH to 00H overflow of TH0. Setting RH0 to 00H will keep the PWM output low.

Figure 13-5. 8-bit Asymmetrical Pulse Width Modulation

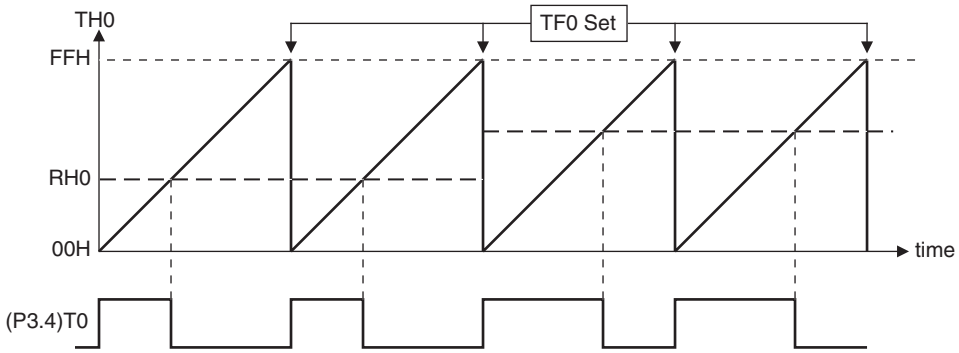

13.6.1 Mode 0 – 8-bit PWM with 8-bit Logarithmic Prescaler

In Mode 0, TLn acts as a logarithmic prescaler driving 8-bit counter THn (see Figure 13-6). The PSCn bits in TCONB control the prescaler value. On THn overflow, the duty cycle value in RHn is transferred to OCRn and the output pin is set high. When the count in THn matches OCRn, the output pin is cleared low. The following formulas give the output frequency and duty cycle for Timer n in PWM Mode 0. Timer 1 in PWM Mode 0 is identical to Timer 0.

Mode 0:

$$f_{out} = \frac{f_{SYS}}{256 \times 2^{PSCn+1}} \times \frac{1}{TPS+1}$$

$$\text{Duty Cycle \%} = 100 \times \frac{RHn}{256}$$

Note: In Fast Mode, TPS applies only when the TnX2 bits in CKCON0 are set. TPS always applies in Compatibility Mode, therefore setting TnX2 in Compatibility Mode will halve the output frequency.

Figure 13-6. Timer/Counter 1 PWM Mode 0

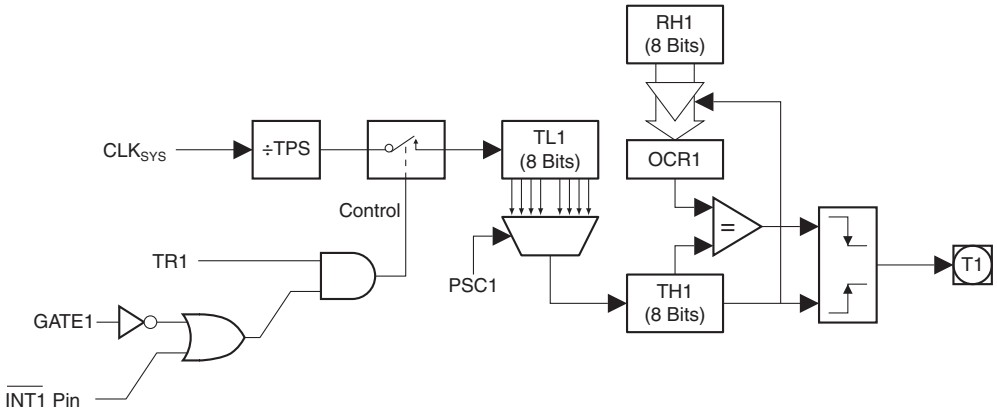

13.6.2 Mode 1 – 8-bit PWM with 8-bit Linear Prescaler

In Mode 1, TLn provides linear prescaling with an 8-bit auto-reload from RLn (see Figure 13-7 on page 85). On TLn overflow, TLn is loaded with the value of RLn. THn acts as an 8-bit counter. On THn overflow, the duty cycle value in RHn is transferred to OCRn and the output pin is set high. When the count in THn matches OCRn, the output pin is cleared low. The following formulas give the output frequency and duty cycle for Timer n in PWM Mode 1. Timer 1 in PWM Mode 1 is identical to Timer 0.

Mode 1:

$$f_{out} = \frac{f_{SYS}}{256 \times (256 - RLn)} \times \frac{1}{TPS+1}$$

$$\text{Duty Cycle \%} = 100 \times \frac{RHn}{256}$$

Note: In Fast Mode, TPS applies only when the TnX2 bits in CKCON0 are set. TPS always applies in Compatibility Mode, therefore setting TnX2 in Compatibility Mode will halve the output frequency.

Figure 13-7. Timer/Counter 1 PWM Mode 1

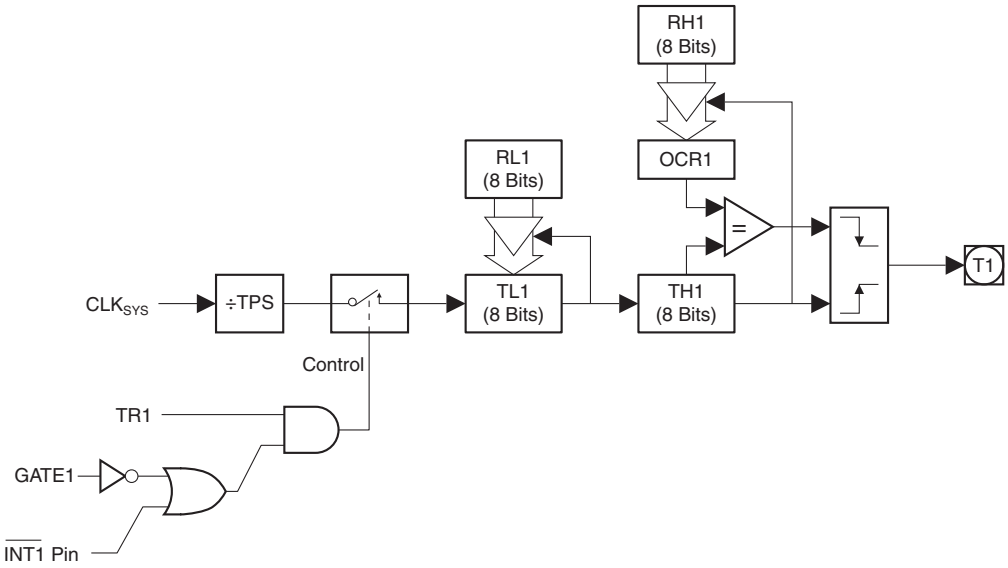

13.6.3 Mode 2 – 8-bit Frequency Generator

Timer n in PWM Mode 2 functions as an 8-bit Auto-Reload timer, the same as normal Mode 2, with the exception that the output pin Tn is toggled at every TLn overflow (see Figure 13-8 and Figure 13-9 on page 86). Timer 1 in PWM Mode 2 is identical to Timer 0. PWM Mode 2 can be used to output a square wave of varying frequency. THn acts as an 8-bit counter. The following formula gives the output frequency for Timer n in PWM Mode 2.

$$\text{Mode 2:} \qquad f_{out} = \frac{f_{SYS}}{2 \times (256 - THn)} \times \frac{1}{TPS + 1}$$

Note: In Fast Mode, TPS applies only when the TnX2 bits in CKCON0 are set. TPS always applies in Compatibility Mode, therefore setting TnX2 in Compatibility Mode will halve the output frequency.

Figure 13-8. Timer/Counter 1 PWM Mode 2

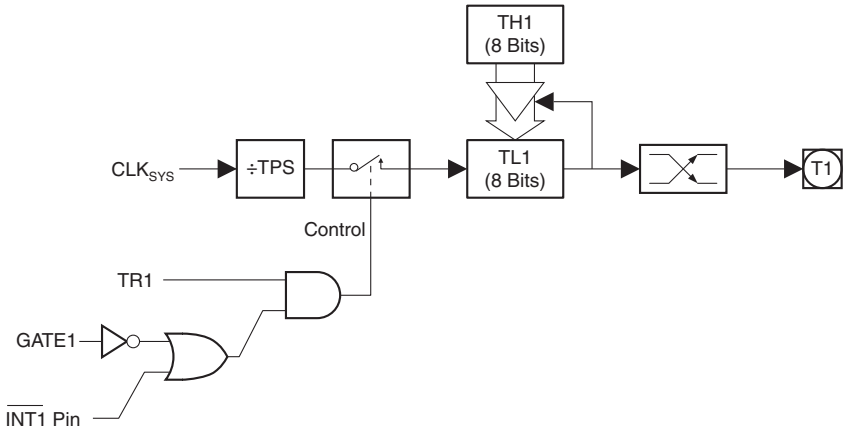

Figure 13-9. PWM Mode 2 Waveform

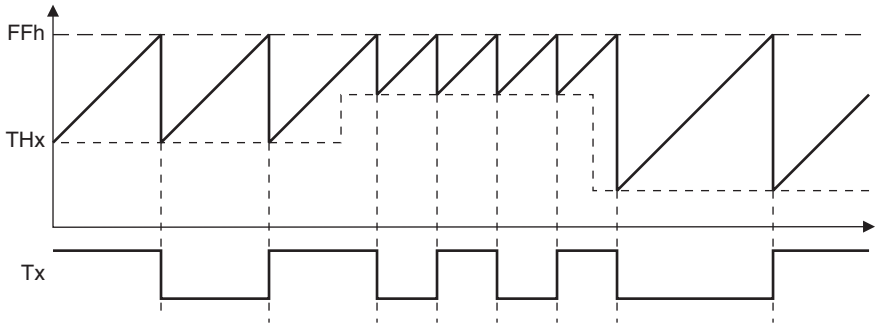

13.6.4 Mode 3 – Split 8-bit PWM

Timer 1 in PWM Mode 3 simply holds its count. The effect is the same as setting TR1 = 0. Timer 0 in PWM Mode 3 establishes TL0 and TH0 as two separate PWM counters in a manner similar to normal Mode 3. PWM Mode 3 on Timer 0 is shown in Figure 13-10. Only the Timer Prescaler is available to change the output frequency during PWM Mode 3. TL0 can use the Timer 0 control bits: GATE, TR0, $\overline{\text{INT0}}$, PWM0EN and TF0. TH0 is locked into a timer function and uses TR1, PWM1EN and TF1. RL0 provides the duty cycle for TL0 and RH0 provides the duty cycle for TH0.

PWM Mode 3 is for applications requiring a single PWM channel and two timers, or two PWM channels and an extra timer or counter. With Timer 0 in PWM Mode 3, the AT89LP51RB2/RC2/IC2 can appear to have four Timer/Counters. When Timer 0 is in PWM Mode 3, Timer 1 can be turned on and off by switching it out of and into its own Mode 3. In this case, Timer 1 can still be used by the serial port as a baud rate generator or in any application not requiring an interrupt. The following formulas give the output frequency and duty cycle for Timer 0 in PWM Mode 3.

$$\text{Mode 3:} \qquad f_{out} = \frac{f_{SYS}}{256} \times \frac{1}{TPS + 1}$$

$$\text{Mode 3, T0:} \qquad \text{Duty Cycle \%} = 100 \times \frac{RL0}{256}$$

$$\text{Mode 3, T1:} \qquad \text{Duty Cycle \%} = 100 \times \frac{RH0}{256}$$

Note: In Fast Mode, TPS applies only when the TnX2 bits in CKCON0 are set. TPS always applies in Compatibility Mode, therefore setting TnX2 in Compatibility Mode will halve the output frequency.

Figure 13-10. Timer/Counter 0 PWM Mode 3

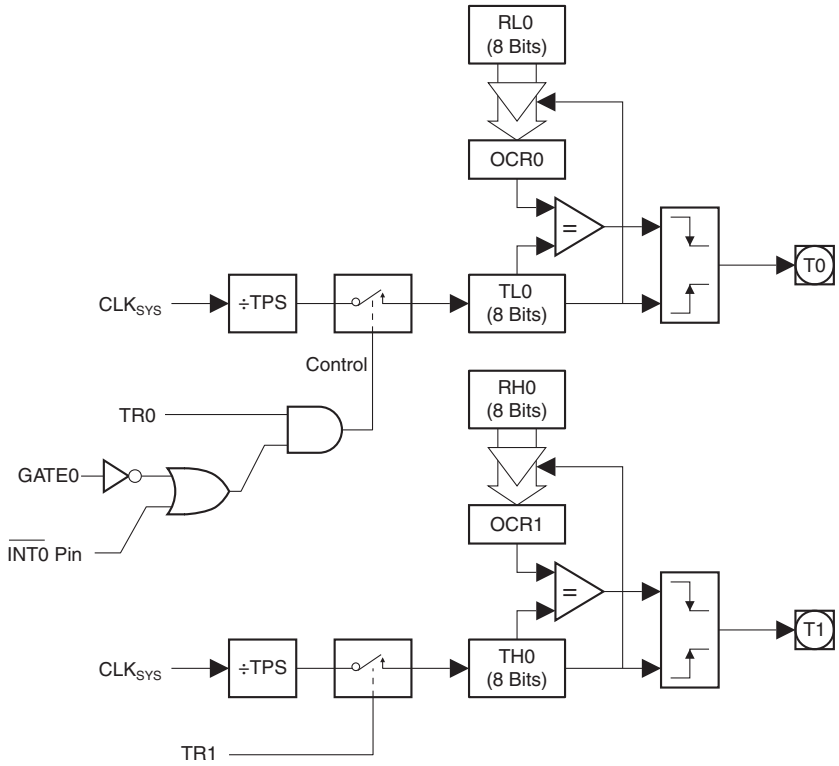

14. Timer 2

The AT89LP51RB2/RC2/IC2 includes a 16-bit Timer/Counter 2 with the following features:

- 16-bit timer/counter with one 16-bit reload/capture register
- One external reload/capture input
- Up/Down counting mode with external direction control
- UART baud rate generation
- Output-pin toggle on timer overflow

Timer 2 is a 16-bit Timer/Counter that can operate as either a timer or an event counter. The type of operation is selected by bit C/$\overline{T2}$ in the SFR T2CON. Timer 2 has three operating modes: capture, auto-reload (up or down counting), and baud rate generator. The modes are selected by bits in T2CON and T2MOD, as shown in Table 14-1.

Timer 2 consists of two 8-bit registers, TH2 and TL2. In the Timer function, the register is incremented every clock cycle. The timer rate can be prescaled by a value between 1 and 16 using the Timer Prescaler (see Section 6.9 on page 48). In Compatibility mode the prescaler is always enabled and TPS defaults to 5, so Timer 2 counts every six clock cycles (1/12 of the oscillator frequency in X1 mode or 1/6 of the oscillator frequency in X2 mode). In X2 mode Timer 2 can be set to the X1 rate by setting the T2X2 bit in CKCON1. In Fast mode the prescaler is not enabled by default so the count rate is equal to the system frequency (1/2 of the oscillator frequency in X1 mode or equal to the oscillator frequency in X2 mode). In this case setting the T2X2 bit in CKCON1 enables the prescaler for Timer 2.

Note that Timer 2 is not affected by the prescaler when operating in the Baud-Rate or Frequency Generator modes.

$$f_{TIMER} = \frac{f_{SYS}}{2^{T2X2} \times (TPS + 1)} \quad \text{Compatibility Mode}$$

$$f_{TIMER} = \frac{f_{SYS}}{TPS + 1} \quad \text{Fast Mode and T2X2 = 1}$$

$$f_{TIMER} = f_{SYS} \quad \text{Fast Mode and T2X2 = 0}$$

Note: In Fast Mode, TPS applies only when the T2X2 bit in CKCON0 is set. TPS always applies in Compatibility Mode, therefore setting T2X2 in Compatibility Mode will halve the timer frequency.

In the Counter function, the register is incremented in response to a 1-to-0 transition at its corresponding external input pin, T2. In Fast mode the external input is sampled every clock cycle. When the samples show a high in one cycle and a low in the next cycle, the count is incremented. The new count value appears in the register during the cycle following the one in which the transition was detected. Since 2 clock cycles are required to recognize a 1-to-0 transition, the maximum count rate is 1/2 of the system frequency. There are no restrictions on the duty cycle of the input signal, but it should be held for at least one full clock cycle to ensure that a given level is sampled at least once before it changes.

In Compatibility mode the counter input sampling is controlled by the prescaler. Since TPS defaults to 6 in this mode, the pins are sampled every six system clocks. Therefore the input signal should be held for at least six clock cycles to ensure that a given level is sampled at least once before it changes.

Table 14-1. Timer 2 Operating Modes

RCLK + TCLK	CP/$\overline{\text{RL2}}$	DCEN	T2OE	TR2	MODE
0	0	0	0	1	16-bit Auto-reload
0	0	1	0	1	16-bit Auto-reload Up-Down
0	1	X	0	1	16-bit Capture
1	X	X	X	1	Baud Rate Generator
X	X	X	1	1	Frequency Generator
X	X	X	X	0	(Off)

The following definitions for Timer 2 are used in the subsequent paragraphs:

Table 14-2. Timer 2 Definitions

Symbol	Definition
MIN	0000H
MAX	FFFFH
BOTTOM	16-bit value of {RCAP2H,RCAP2L}

14.1 Timer 2 Registers

Control and status bits for Timer 2 are contained in registers T2CON (see Table 14-3) and T2MOD (see Table 14-4). The register pair {TH2, TL2} at addresses 0CDH and 0CCH are the 16-bit timer register for Timer 2. The register pair {RCAP2H, RCAP2L} at addresses 0CBH and 0CAH are the 16-bit Capture/Reload register for Timer 2 in capture and auto-reload modes.

Table 14-3. T2CON – Timer/Counter 2 Control Register

T2CON Address = 0C8H — Reset Value = 0000 0000B

Bit Addressable

	TF2	EXF2	RCLK	TCLK	EXEN2	TR2	C/$\overline{T2}$	CP/$\overline{RL2}$
Bit	7	6	5	4	3	2	1	0

Symbol	Function
TF2	**Timer 2 Overflow Flag** Set by hardware when Timer 2 overflows and must be cleared by software. TF2 will not be set when either RCLK = 1 or TCLK = 1. TF2 will generate an interrupt when ET2 is set in IEN0.
EXF2	**Timer 2 External Flag** Set when either a capture or reload is caused by a negative transition on T2EX and EXEN2 = 1. When Timer 2 interrupt is enabled, EXF2 = 1 will cause the CPU to vector to the Timer 2 interrupt routine. EXF2 must be cleared by software. EXF2 does not cause an interrupt in up/down counter mode (DCEN = 1) or dual-slope mode.
RCLK	**Receive Clock Enable** Set to use Timer 2 overflow pulses for receive clock in serial port Modes 1 and 3. Clear to use Timer 1 overflows for the receive clock.
TCLK	**Transmit Clock Enable** Set to use Timer 2 overflow pulses for transmit clock in serial port Modes 1 and 3. Clear to use Timer 1 overflows for the transmit clock.
EXEN2	**Timer 2 External Enable** When set, allows a capture or reload to occur as a result of a negative transition on T2EX if Timer 2 is not being used to clock the serial port. EXEN2 = 0 causes Timer 2 to ignore events at T2EX.
TR2	**Timer 2 Run Control** Start/Stop control for Timer 2. TR2 = 1 starts the timer. TR2 = 0 stops the timer.
C/$\overline{T2}$	**Timer/Counter Select 2** Clear C/$\overline{T2}$ = 0 for timer function. Set C/$\overline{T2}$ = 1 for external event counter on T2 (P1.0) (falling edge triggered). C/$\overline{T2}$ must be 0 to use clock out mode.
CP/$\overline{RL2}$	**Capture/Reload Select** CP/$\overline{RL2}$ = 1 causes captures to occur on negative transitions at T2EX if EXEN2 = 1. CP/$\overline{RL2}$ = 0 causes automatic reloads to occur when Timer 2 overflows or negative transitions occur at T2EX when EXEN2 = 1. When either RCLK or TCLK = 1, this bit is ignored and the timer is forced to auto-reload on Timer 2 overflow.

Note: The Timer 2 operating mode depends on bits in both T2CON and T2MOD as shown in Table 14-1. The RCLK, TCLK and T2OE bits have priority over CP/$\overline{RL2}$.

Table 14-4. T2MOD – Timer 2 Mode Control Register

T2MOD Address = 0C9H — Reset Value = 0000 0000B

Not Bit Addressable

	–	–	–	–	–	–	T2OE	DCEN
Bit	7	6	5	4	3	2	1	0

Symbol	Function
T2OE	**Timer 2 Output Enable** When T2OE = 1 and C/$\overline{T}$2 = 0, the T2 pin will toggle after every Timer 2 overflow.
DCEN	**Timer 2 Down Count Enable** When Timer 2 operates in Auto-Reload mode and EXEN2 = 1, setting DCEN = 1 will cause Timer 2 to count up or down depending on the state of T2EX.

14.2 Capture Mode

In the Capture mode, Timer 2 is a fixed 16-bit timer or counter that counts up from MIN to MAX. An overflow from MAX to MIN sets bit TF2 in T2CON. If EXEN2 = 1, a 1-to-0 transition at external input T2EX also causes the current value in TH2 and TL2 to be captured into RCAP2H and RCAP2L, respectively. In addition, the transition at T2EX causes bit EXF2 in T2CON to be set. The EXF2 and TF2 bits can generate an interrupt. Capture mode is illustrated in Figure 14-1. The Timer 2 overflow rate in Capture mode is given by the following equation:

$$\text{Capture Mode:} \qquad \text{Time-out Period} = \frac{65536}{f_{SYS}} \times (\text{TPS} + 1)$$

Note: In Fast Mode, TPS applies only when the T2X2 bit in CKCON0 is set. TPS always applies in Compatibility Mode, therefore setting T2X2 in Compatibility Mode will double the timeout period.

Figure 14-1. Timer 2 Diagram: Capture Mode

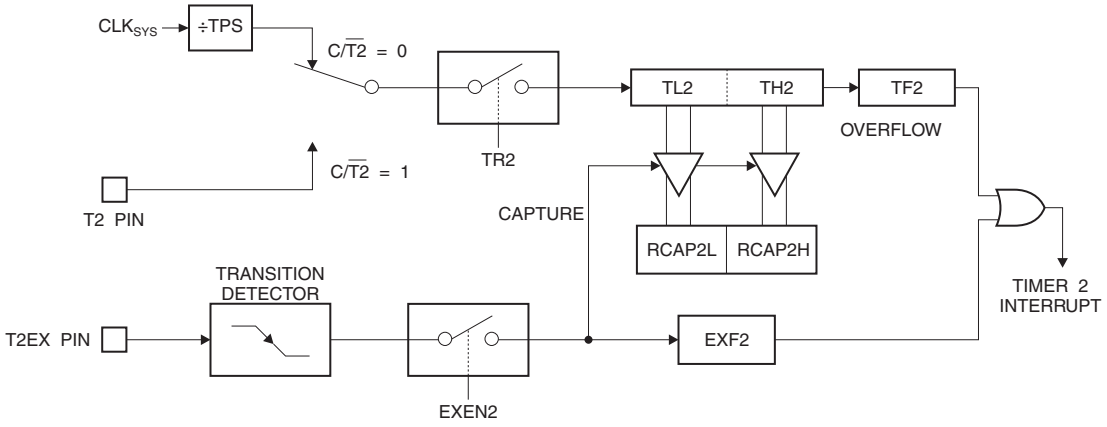

14.3 Auto-Reload Mode

Timer 2 can be programmed to count up or down when configured in its 16-bit auto-reload mode. This feature is invoked by the DCEN (Down Counter Enable) bit located in the SFR T2MOD (see Table 14-4). Upon reset, the DCEN bit is set to 0 so that timer 2 will default to count up. When DCEN is set, Timer 2 can count up or down, depending on the value of the T2EX pin. A summary of the Auto-Reload behaviors is listed in Table 14-5.

Table 14-5. Summary of Auto-Reload Modes

DCEN	T2EX	Direction	Behavior
0	X	Up	BOTTOM →MAX reload to BOTTOM
1	0	Down	MAX →BOTTOM underflow to MAX
1	1	Up	BOTTOM →MAX overflow to BOTTOM

14.3.1 Up Counter

Figure 14-2 shows Timer 2 automatically counting up when DCEN = 0. In this mode Timer 2 counts up to MAX and then sets the TF2 bit upon overflow. The overflow also causes the timer registers to be reloaded with BOTTOM, the 16-bit value in RCAP2H and RCAP2L. If EXEN2 = 1, a 16-bit reload can be triggered either by an overflow or by a 1-to-0 transition at external input T2EX. This transition also sets the EXF2 bit. Both the TF2 and EXF2 bits can generate an interrupt. The Timer 2 overflow rate for this mode is given in the following equation:

Auto-Reload Mode:
DCEN = 0

$$\text{Time-out Period} = \frac{65536 - \{RCAP2H, RCAP2L\}}{f_{SYS}} \times (TPS + 1)$$

Note: In Fast Mode, TPS applies only when the T2X2 bit in CKCON0 is set. TPS always applies in Compatibility Mode, therefore setting T2X2 in Compatibility Mode will double the timeout period.

Figure 14-2. Timer 2 Diagram: Auto-Reload Mode (DCEN = 0)

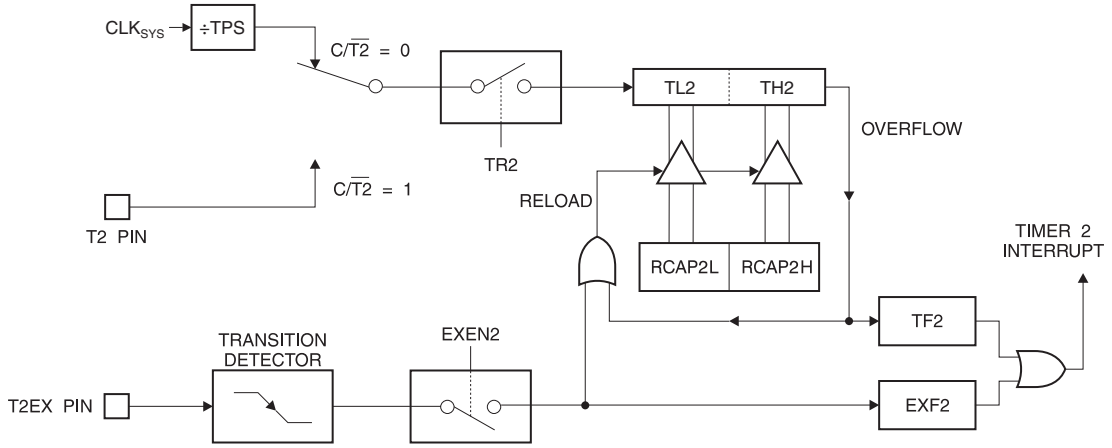

Figure 14-3. Timer 2 Waveform: Auto-Reload Mode (DCEN = 0)

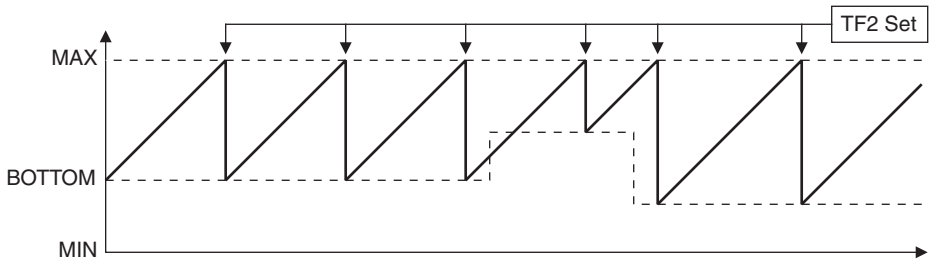

14.3.2 Up or Down Counter

Setting DCEN = 1 enables Timer 2 to count up or down, as shown in Figure 14-5. In this mode, the T2EX pin controls the direction of the count (if EXEN2 = 1). A logic 1 at T2EX makes Timer 2 count up. When $T2CM_{1-0}$ = 00B, the timer will overflow at MAX and set the TF2 bit. This overflow also causes BOTTOM, the 16-bit value in RCAP2H and RCAP2L, to be reloaded into the timer registers, TH2 and TL2, respectively. A logic 0 at T2EX makes Timer 2 count down. The timer underflows when TH2 and TL2 equal BOTTOM, the 16-bit value stored in RCAP2H and RCAP2L. The underflow sets the TF2 bit and causes MAX to be reloaded into the timer registers. The EXF2 bit toggles whenever Timer 2 overflows or underflows and can be used as a 17th bit of resolution. In this operating mode, EXF2 does not flag an interrupt.

The behavior of Timer 2 when DCEN is enabled is shown in Figure 14-4. The timer overflow/underflow rate for up-down counting mode is the same as for up counting mode, provided that the count direction does not change. Changes to the count direction may result in longer or shorter periods between time-outs.

Figure 14-4. Timer 2 Waveform: Auto-Reload Mode (DCEN = 1)

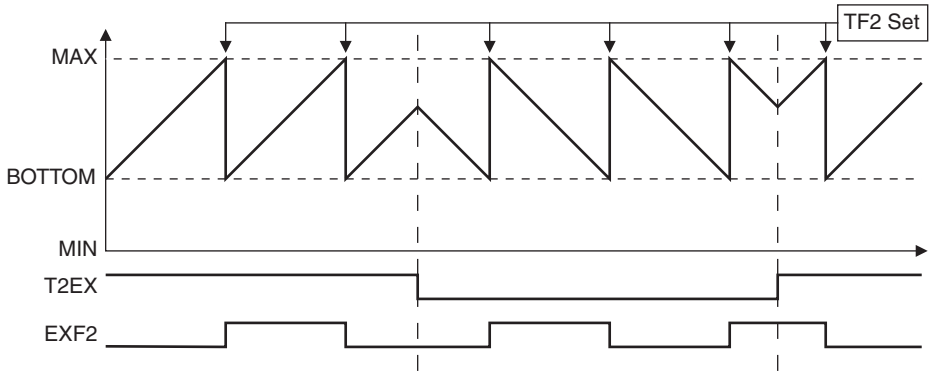

Figure 14-5. Timer 2 Diagram: Auto-Reload Mode (DCEN = 1)

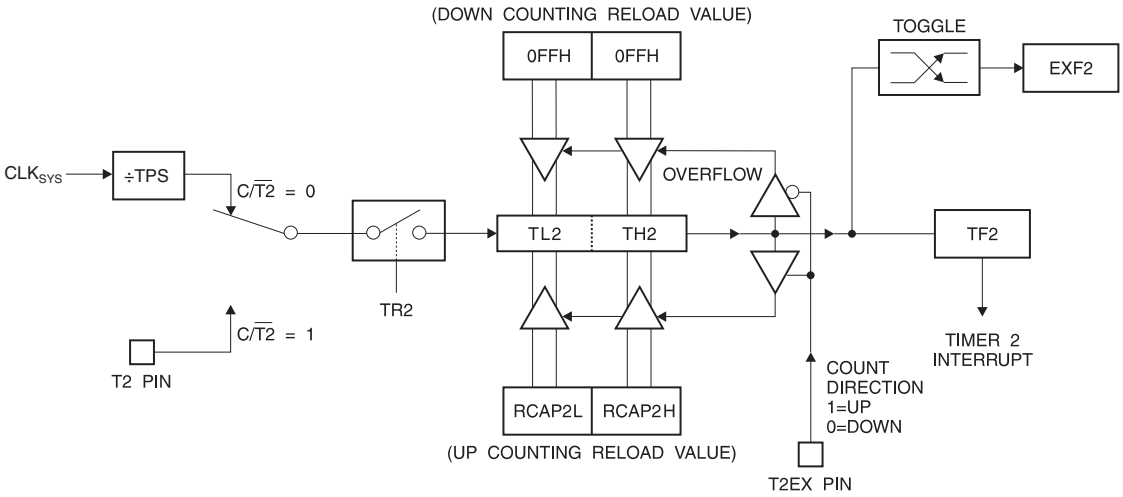

14.4 Baud Rate Generator

Timer 2 is selected as the baud rate generator by setting TCLK and/or RCLK in T2CON (Table 14-3). Note that the baud rates for transmit and receive can be different if Timer 2 is used for the receiver or transmitter and Timer 1 is used for the other function. Setting RCLK and/or TCLK puts Timer 2 into its baud rate generator mode, as shown in Figure 14-6.

The baud rate generator mode is similar to the auto-reload mode, in that a rollover in TH2 causes the Timer 2 registers to be reloaded with the 16-bit value in registers RCAP2H and RCAP2L, which are preset by software.

The baud rates in UART Modes 1 and 3 are determined by Timer 2's overflow rate according to the following equation.

$$\text{Modes 1 and 3 Baud Rates} = \frac{\text{Timer 2 Overflow Rate}}{16}$$

The Timer can be configured for either timer or counter operation. In most applications, it is configured for timer operation (CP/$\overline{T2}$ = 0). The baud rate formulas are given below.

$$\begin{array}{c}\text{Modes 1, 3}\\ \text{Baud Rate}\end{array} = \frac{f_{SYS}}{16 \times [65536 - (\text{RCAP2H,RCAP2L})]}$$

where (RCAP2H, RCAP2L) is the content of RCAP2H and RCAP2L taken as a 16-bit unsigned integer.

Timer 2 as a baud rate generator is shown in Figure 14-6. This figure is valid only if RCLK or TCLK = 1 in T2CON. Note that a rollover in TH2 does not set TF2 and will not generate an interrupt. Note too, that if EXEN2 is set, a 1-to-0 transition in T2EX will set EXF2 but will not cause a reload from (RCAP2H, RCAP2L) to (TH2, TL2). Thus when Timer 2 is in use as a baud rate generator, T2EX can be used as an extra external interrupt. Also note that the Baud Rate and Frequency Generator modes may be used simultaneously.

Figure 14-6. Timer 2 in Baud Rate Generator Mode

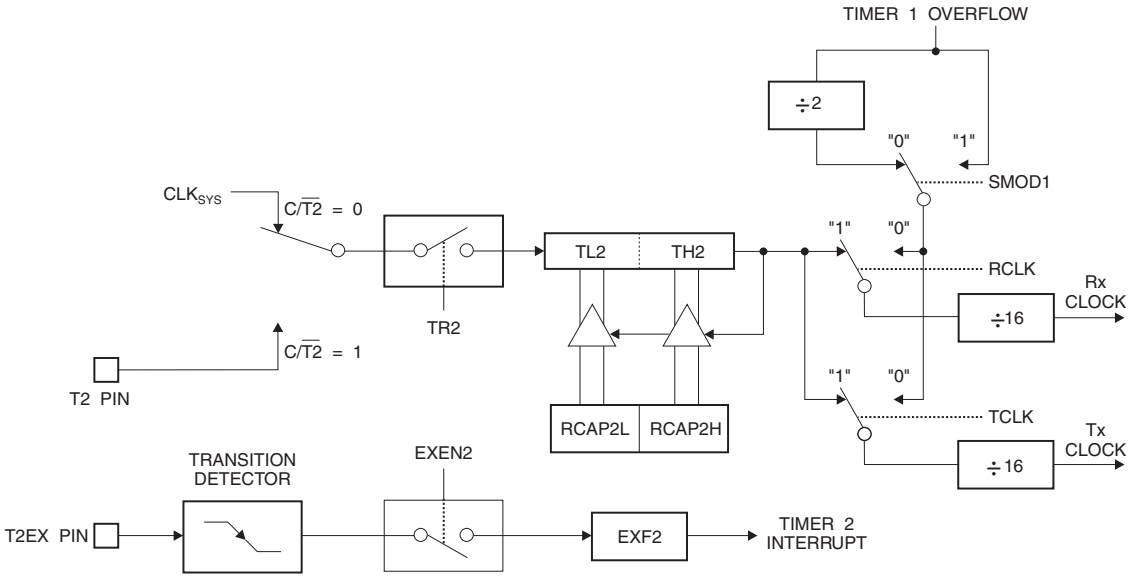

14.5 Frequency Generator (Programmable Clock Out)

Timer 2 can generate a 50% duty cycle clock on T2 (P1.0). This pin, besides being a regular I/O pin, has two alternate functions. It can be programmed to input the external clock for Timer/Counter 2 or to toggle its output at every timer overflow. To configure the Timer/Counter 2 as a clock generator, bit C/$\overline{T2}$ (T2CON.1) must be cleared and bit T2OE (T2MOD.1) must be set. Bit TR2 (T2CON.2) starts and stops the timer. The clock-out frequency depends on the system frequency and the reload value of Timer 2 capture registers (RCAP2H, RCAP2L), as shown in the following equation.

$$\text{Clock Out Frequency} = \frac{f_{SYS}}{2 \times [65536 - (\text{RCAP2H,RCAP2L})]}$$

In the frequency generator mode, Timer 2 roll-overs will not generate an interrupt. This behavior is similar to when Timer 2 is used as a baud-rate generator. It is possible to use Timer 2 as a baud-rate generator and a clock generator simultaneously. Note, however, that the baud-rate and clock-out frequencies cannot be determined independently from one another since they both use RCAP2H and RCAP2L.

Figure 14-7. Timer 2 in Clock-out Mode

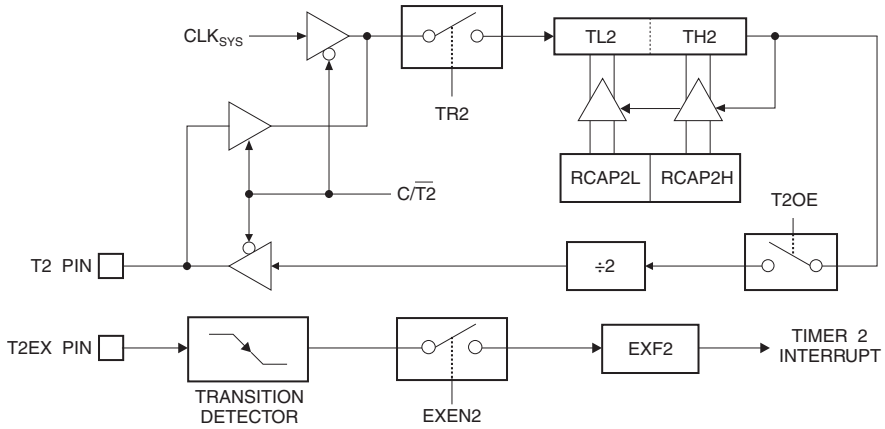

15. Programmable Counter Array (PCA)

The PCA provides more timing capabilities with less CPU intervention than the standard timer/counters. Its advantages include reduced software overhead and improved accuracy. The PCA consists of a dedicated timer/counter which serves as the time base for an array of five compare/capture modules. Its clock input can be programmed to count any one of the following signals:

- Peripheral clock frequency (F_{PERIPH}) ÷ (TPS+1)
- Peripheral clock frequency (F_{PERIPH}) ÷ 2
- Timer 0 overflow
- External input on ECI (P1.2)

Each compare/capture module can be programmed in any one of the following modes:

- Rising and/or falling edge capture
- Software timer
- High-speed output
- Pulse width modulator

Module 4 can also be programmed as a watchdog timer (see "PCA Watchdog Timer" on page 104).

When the compare/capture modules are programmed in the capture mode, software timer, or high speed output mode, an interrupt can be generated when the module executes its function. All five modules plus the PCA timer overflow share one interrupt vector.

The PCA timer/counter and compare/capture modules share Port 1 for external I/O. These pins are listed below. If one or several bits in the port are not used for the PCA, they can still be used for standard I/O.

Table 15-1. PCA I/O Pins

PCA Component	External I/O Pin
16-bit Counter	P1.2/ECI
16-bit Module 0	P1.3/CEX0
16-bit Module 1	P1.4/CEX1
16-bit Module 2	P1.5/CEX2
16-bit Module 3	P1.6/CEX3

15.1 PCA Timer/Counter

The PCA timer is a common time base for all five modules (see Figure 15-1). The timer count source is determined from the CPS1 and CPS0 bits in the CMOD register (Table 15-2) and can be programmed to run at:

- 1/6 the peripheral clock frequency (F_{PERIPH})
- 1/2 the peripheral clock frequency (F_{PERIPH})
- The Timer 0 overflow
- The input on the ECI pin (P1.2)

The CMOD register includes three additional bits associated with the PCA (See Figure 15-1 and Table 15-2).

- The CIDL bit which allows the PCA to stop during idle mode.
- The WDTE bit which enables or disables the watchdog function on module 4. (See Figure 15-4 and Section 15.7)
- The ECF bit which when set causes an interrupt and the PCA overflow flag CF (in the CCON SFR) to be set when the PCA timer overflows.

Figure 15-1. PCA Timer/Counter

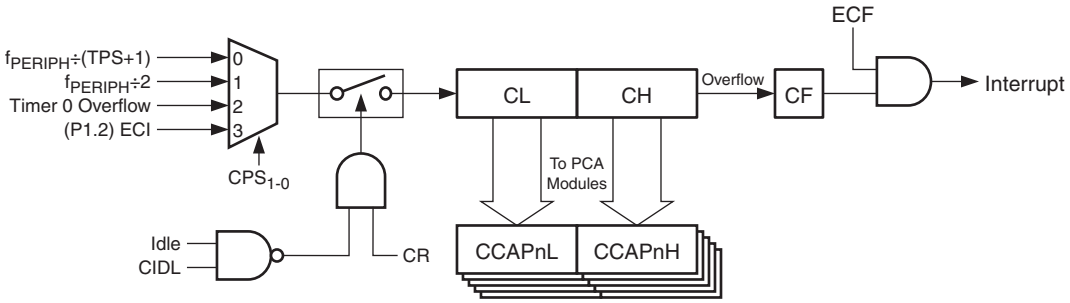

Table 15-2. CMOD – PCA Counter Mode Register

CMOD Address = 0D9H — Reset Value = 00xx x000B

Not Bit Addressable

	CIDL	WDTE	–	–	–	CPS1	CPS0	ECF
Bit	7	6	5	4	3	2	1	0

Symbol	Function
CIDL	**Counter Idle Control** Clear to allow the PCA Counter to function during Idle Mode. Set to halt the PCA Counter during Idle.
WDTE	**Watchdog Timer Enable** Clear to disable the watchdog timer function on PCA Module 4. Set to enable the watchdog function of PCA Module 4.
CPS_{1-0}	**PCA Count Pulse Select** CPS1 CPS0 PCA Clock Input 0 0 f_{PERIPH}/(TPS+1) *Note: In Fast Mode TPS is only active when PCAX2 = 1 in CKCON0. 0 1 f_{PERIPH}/2 1 0 Timer 0 Overflow 1 1 ECI Input (P1.2)
ECF	**PCA Enable Counter Overflow Interrupt** Clear to prevent the CF bit in CCON from generating an interrupt. Set to enable CF in CCON as an interrupt source.

The CCON register contains the run control bit for the PCA and the flags for the PCA timer (CF) and each module (Refer to Table 15-3).

- Bit CR (CCON.6) must be set by software to run the PCA. The PCA is shut off by clearing this bit.

- Bit CF: The CF bit (CCON.7) is set when the PCA counter overflows and an interrupt will be generated if the ECF bit in the CMOD register is set. The CF bit can only be cleared by software.
- Bits 0 through 4 are the flags for the modules (bit 0 for module 0, bit 1 for module 1, etc.) and are set by hardware when either a match or a capture occurs. These flags also can only be cleared by software. The PCA interrupt system is shown in Figure 15-2.

Table 15-3. CCON – PCA Counter Control Register

CCON Address = 0D8H — Reset Value = 00x0 0000B

Bit Addressable

	CF	CR	–	CCF4	CCF3	CCF2	CCF1	CCF0
Bit	7	6	5	4	3	2	1	0

Symbol	Function
CF	**PCA Counter Overflow Flag** Set by hardware when the PCA counter overflows from FFFFH to 0000H. CF generates an interrupt if the ECF bit in CMOD and EC bit in IEN0 are both set. Must be cleared by software.
CR	**PCA Counter Run Control** Clear to disable the PCA Counter from operating. Set to enable the PCA Counter to count at the CPS rate in CMOD.
CCF4	**PCA Module 4 Interrupt Flag** Set by hardware when a compare of match occurs in Module 4. CCF4 generates an interrupt if the ECCF4 bit in CCAPM4 and EC bit in IEN0 are both set. Must be cleared by software.
CCF3	**PCA Module 3 Interrupt Flag** Set by hardware when a compare of match occurs in Module 2. CCF3 generates an interrupt if the ECCF3 bit in CCAPM3 and EC bit in IEN0 are both set. Must be cleared by software.
CCF2	**PCA Module 2 Interrupt Flag** Set by hardware when a compare of match occurs in Module 2. CCF2 generates an interrupt if the ECCF2 bit in CCAPM2 and EC bit in IEN0 are both set. Must be cleared by software.
CCF1	**PCA Module 1 Interrupt Flag** Set by hardware when a compare of match occurs in Module 1. CCF1 generates an interrupt if the ECCF1 bit in CCAPM1 and EC bit in IEN0 are both set. Must be cleared by software.
CCF0	**PCA Module 0 Interrupt Flag** Set by hardware when a compare of match occurs in Module 0. CCF0 generates an interrupt if the ECCF0 bit in CCAPM0 and EC bit in IEN0 are both set. Must be cleared by software.

Table 15-4. CH – PCA Counter Register High

CH Address = 0F9H — Reset Value = 0000 0000B

Not Bit Addressable

	C15	C14	C13	C12	C11	C10	C9	C8
Bit	7	6	5	4	3	2	1	0

Symbol	Function
C_{15-8}	**Module n Compare/Capture Register High** Holds the higher order bits of the 16-bit PCA Timer/Counter.

Table 15-5. CL – PCA Counter Register Low

CL Address = 0E9H							Reset Value = 0000 0000B
Not Bit Addressable							
	C7	C6	C5	C4	C3	C2	C1	C0
Bit	7	6	5	4	3	2	1	0

Symbol	Function
C_{7-0}	**Module n Compare/Capture Register Low** Holds the lower order bits of the 16-bit PCA Timer/Counter.

Figure 15-2. PCA Interrupt System

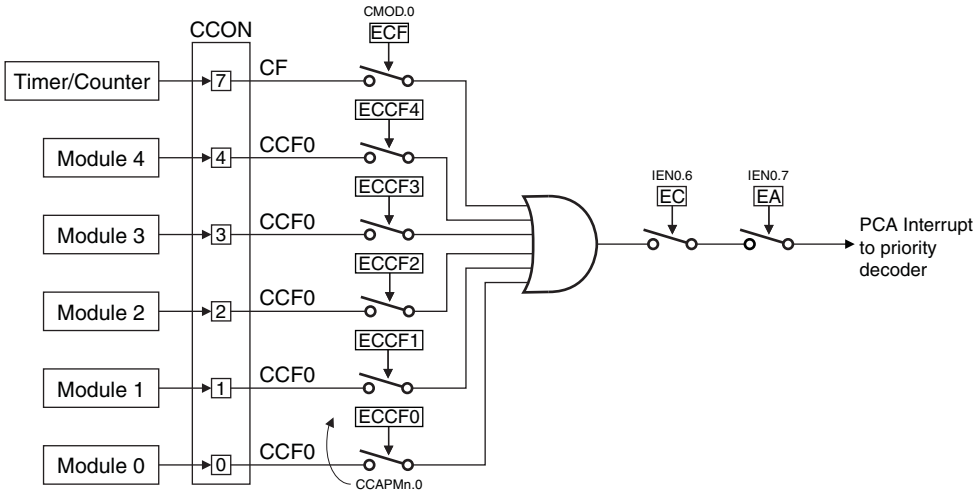

15.2 PCA Modules

Each one of the five compare/capture modules has six possible functions. It can perform:

- 16-bit Capture, positive-edge triggered
- 16-bit Capture, negative-edge triggered
- 16-bit Capture, both positive and negative-edge triggered
- 16-bit Software Timer
- 16-bit High Speed Output
- 8-bit Pulse Width Modulator

In addition, Module 4 can be used as a Watchdog Timer.

Each module in the PCA has a special function register associated with it. These registers are: CCAPM0 for Module 0, CCAPM1 for Module 1, etc. (See Table 15-6). The registers contain the bits that control the mode that each module will operate in.

- The ECCF bit (CCAPMn.0 where n = 0, 1, 2, 3, or 4 depending on the module) enables the CCF flag in the CCON SFR to generate an interrupt when a match or compare occurs in the associated module.
- PWM (CCAPMn.1) enables the pulse width modulation mode.

- The TOG bit (CCAPMn.2) when set causes the CEX output associated with the module to toggle when there is a match between the PCA counter and the modules capture/compare register.
- The match bit MAT (CCAPMn.3) when set will cause the CCFn bit in the CCON register to be set when there is a match between the PCA counter and the modules capture/compare register.
- The next two bits CAPN (CCAPMn.4) and CAPP (CCAPMn.5) determine the edge that a capture input will be active on. The CAPN bit enables the negative edge, and the CAPP bit enables the positive edge. If both bits are set both edges will be enabled and a capture will occur for either transition.
- The last bit in the register ECOM (CCAPMn.6) when set enables the comparator function.

Table 15-6 shows the CCAPMn settings for the various PCA functions.

Table 15-6. CCAPMn – PCA Module n Compare/Capture Control Register (n = 0–4)

CCAPM0 Address = 0DAH — Reset Value = x000 0000B

CCAPM1 Address = 0DBH

CCAPM2 Address = 0DCH

CCAPM3 Address = 0DDH

CCAPM4 Address = 0DEH

Not Bit Addressable

	–	ECOMn	CAPPn	CAPNn	MATn	TOGn	PWMn	ECCFn
Bit	7	6	5	4	3	2	1	0

Symbol	Function
ECOMn	**Enable Comparator** Clear to disable the comparator function of Module n. Set to enable the comparator function of Module n
CAPPn	**Capture Positive** Clear to disable positive edge capture for Module n. Set to enable positive edge capture for Module n.
CAPNn	**Capture Negative** Clear to disable negative edge capture for Module n. Set to enable negative edge capture for Module n.
MATn	**Match Enable** When MATn = 1 and ECOMn = 1 a match between the PCA counter and Module n's compare/capture register will set the CCFn bit in CCON. Clear MATn to disable setting of CCFn by compare events.
TOGn	**Toggle Output** When TOGn = 1 and ECOMn = 1 a match between the PCA counter and Module n's compare/capture register will toggle the CEXn pin. Clear TOGn to disable toggling of CEXn by compare events.
PWMn	**Pulse Width Modulation Enable** Set to configure Module n in PWM mode and use CEXn as a PWM output. Clear to disable PWM mode for Module n.
ECCFn	**Enable CCFn Interrupt** Clear to disable the CCFn bit in CCON as an interrupt source. Set to enable the CCFn bit in CCON to generate interrupts.

Note: PCA Module Modes (CCAPMn Registers

ECOMn	CAPPn	CAPNn	MATn	TOGn	PWMn	ECCFn	Module Function
0	0	0	0	0	0	0	No Operation
X	1	0	0	0	0	X	16-bit capture by a positive-edge trigger on CEXn
X	0	1	0	0	0	X	16-bit capture by a negative trigger on CEXn
X	1	1	0	0	0	X	16-bit capture by a transition on CEXn
1	0	0	1	0	0	X	16-bit Software Timer/Compare mode.
1	0	0	1	1	0	X	16-bit High Speed Output
1	0	0	0	0	1	0	8-bit PWM
1	0	0	1	X	0	X	Watchdog Timer (module 4 only)

There are two additional registers associated with each of the PCA modules. They are CCAPnH and CCAPnL and these are the registers that store the 16-bit count when a capture occurs or a compare should occur. When a module is used in the PWM mode these registers are used to control the duty cycle of the output (See Table 15-7 & Table 15-8).

Table 15-7. CCAPnH – PCA Module n Compare/Capture Register High (n = 0–4)

CCAP0H Address = 0FAH — Reset Value = 0000 0000B

CCAP1H Address = 0FBH

CCAP2H Address = 0FCH

CCAP3H Address = 0FDH

CCAP4H Address = 0FEH

Not Bit Addressable

	CCAPn.15	CCAPn.14	CCAPn.13	CCAPn.12	CCAPn.11	CCAPn.10	CCAPn.9	CCAPn.8
Bit	7	6	5	4	3	2	1	0

Symbol	Function
$CCAPn_{15-8}$	**Module n Compare/Capture Register High** Holds the higher order bits of the 16-bit Compare/Capture value for Module n.

Table 15-8. CCAPnL – PCA Module n Compare/Capture Register Low (n = 0–4)

CCAP0L Address = 0EAH — Reset Value = 0000 0000B

CCAP1L Address = 0EBH

CCAP2L Address = 0ECH

CCAP3L Address = 0EDH

CCAP4L Address = 0EEH

Not Bit Addressable

	CCAPn.7	CCAPn.6	CCAPn.5	CCAPn.4	CCAPn.3	CCAPn.2	CCAPn.1	CCAPn.0
Bit	7	6	5	4	3	2	1	0

Symbol	Function
$CCAPn_{7-0}$	**Module n Compare/Capture Register Low** Holds the lower order bits of the 16-bit Compare/Capture value for Module n.

15.3 PCA Capture Mode

To use one of the PCA modules in the capture mode either one or both of the CCAPM bits CAPN and CAPP for that module must be set. The external CEX input for the module (on port 1) is sampled for a transition. When a valid transition occurs the PCA hardware loads the value of the PCA counter registers (CH and CL) into the module's capture registers (CCAPnL and CCAPnH). If the CCFn bit for the module in the CCON SFR and the ECCFn bit in the CCAPMn SFR are set then an interrupt will be generated (Refer to Figure 15-3).

Figure 15-3. PCA Capture Mode

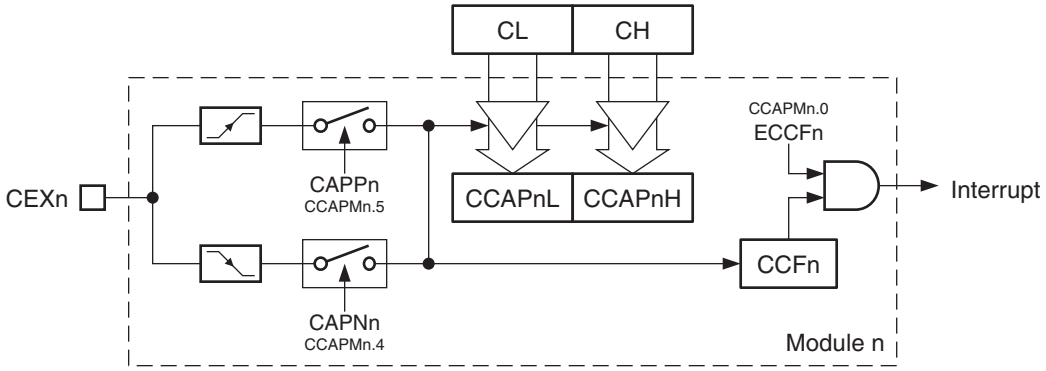

15.4 16-bit Software Timer/ Compare Mode

The PCA modules can be used as software timers by setting both the ECOM and MAT bits in the modules CCAPMn register. The PCA timer will be compared to the module's capture registers and when a match occurs an interrupt will occur if the CCFn (CCON SFR) and the ECCFn (CCAPMn SFR) bits for the module are both set (See Figure 15-4).

Figure 15-4. PCA Compare Mode and PCA Watchdog Timer

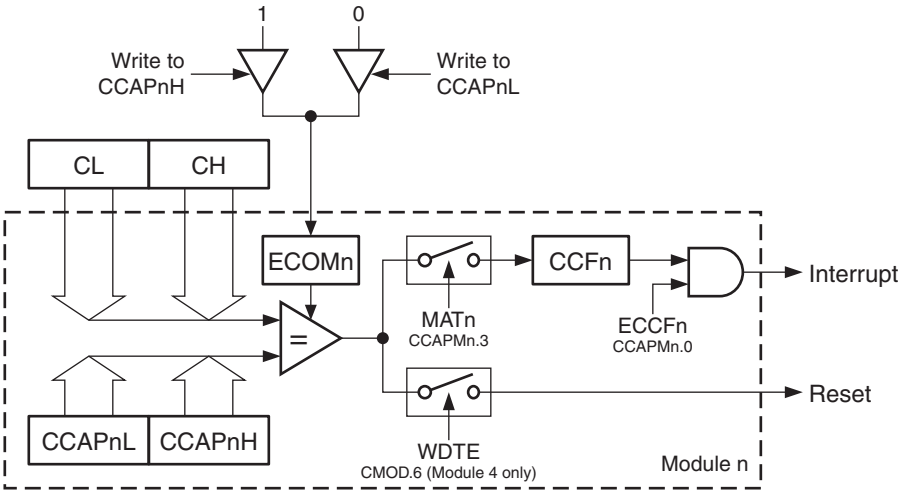

Before enabling ECOM bit, CCAPnL and CCAPnH should be set with a non zero value, otherwise an unwanted match could happen. Writing to CCAPnH will set the ECOM bit. Once ECOM is set, writing CCAPnL will clear ECOM so that an unwanted match doesn't occur while modifying the compare value. Writing to CCAPnH will set ECOM. For this reason, user software should write CCAPnL first, and then CCAPnH. Of course, the ECOM bit can still be controlled by accessing to CCAPMn register.

15.5 High Speed Output Mode

In this mode the CEX output (on port 1) associated with the PCA module will toggle each time a match occurs between the PCA counter and the modules capture registers as shown in Figure 15-6. To activate this mode the TOG, MAT, and ECOM bits in the module's CCAPMn SFR must be set (See Figure 15-5).

A prior write must be done to CCAPnL and CCAPnH before writing the ECOMn bit.

Figure 15-5. PCA High Speed Output Mode

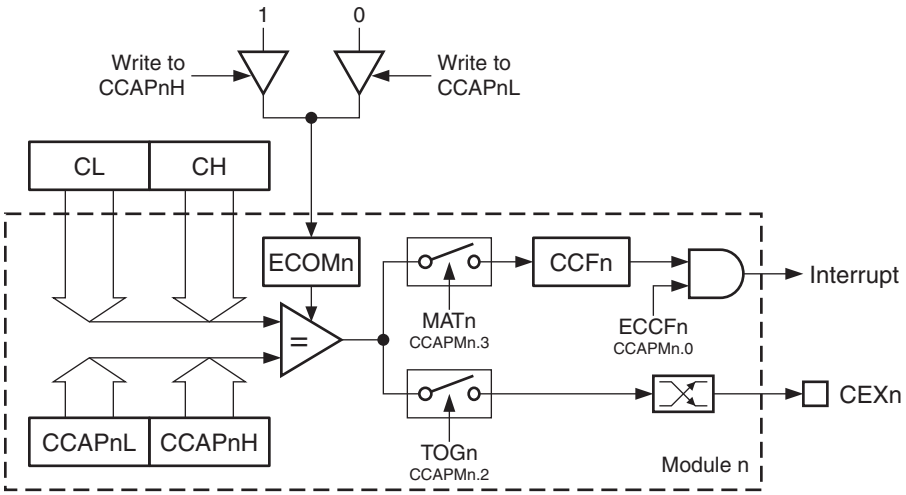

Before enabling ECOM bit, CCAPnL and CCAPnH should be set with a non zero value, otherwise an unwanted match could happen. Once ECOM is set, writing CCAPnL will clear ECOM so that an unwanted match doesn't occur while modifying the compare value. Writing to CCAPnH will set ECOM. For this reason, user software should write CCAPnL first, and then CCAPnH. Of course, the ECOM bit can still be controlled by accessing to CCAPMn register.

An example of a High Speed Output waveform is shown in Figure 15-6. The frequency of the output can be controlled by reloading the PCA Timer in software and/or changing the compare values multiple times per timeout period.

Figure 15-6. High Speed Output Waveform

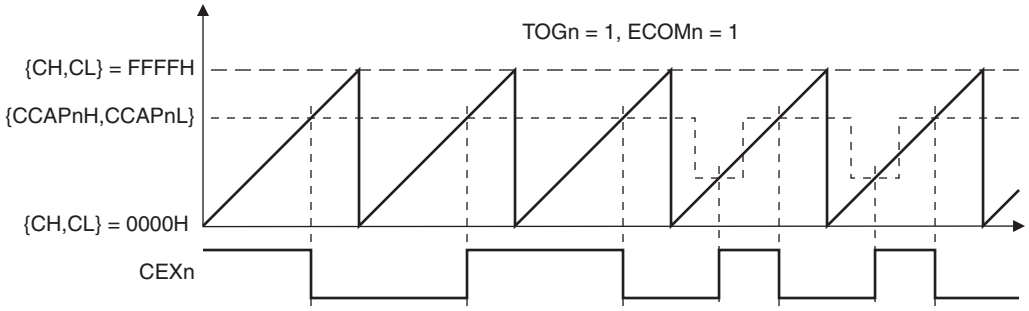

15.6 Pulse Width Modulator Mode

All of the PCA modules can be used as PWM outputs. Figure 15-7 shows the PWM function. The frequency of the output depends on the source for the PCA timer. All of the modules will have the same frequency of output because they all share the PCA timer. The duty cycle of each module is independently variable using the modules capture register CCAPnL. When the value of the PCA CL SFR is less than the value in the modules CCAPnL SFR the output will be low, when it is equal to or greater than the output will be high. When CL overflows from FFH to 00H, CCAPnL is reloaded with the value in CCAPnH. This allows updating the PWM without glitches. The PWM and ECOM bits in the module's CCAPMn register must be set to enable the PWM mode. The following equations show the resulting frequency and duty cycles of the generated output:

$$\text{CPS} = 00\text{B}: \qquad f_{out} = \frac{f_{SYS}}{256} \times \frac{1}{\text{TPS} + 1}$$

$$\text{Duty Cycle \%} = 100 \times \frac{256 - \text{CCAPnL}}{256}$$

Figure 15-7. PCA PWM Mode

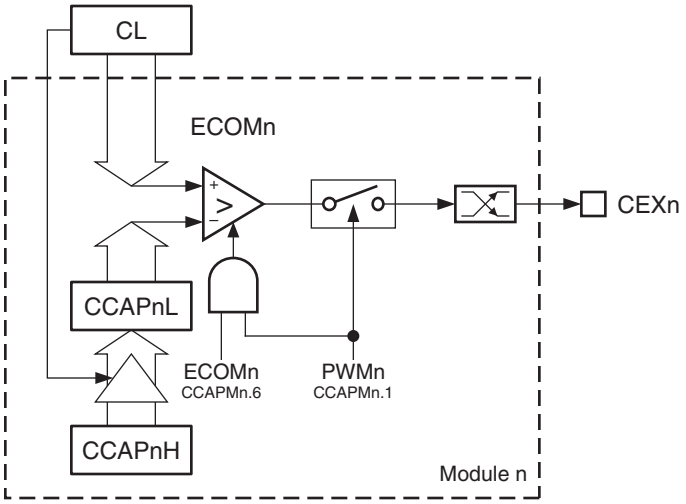

An example PCA PWM waveform is shown in Figure 15-8.

Figure 15-8. PCA PWM Waveform

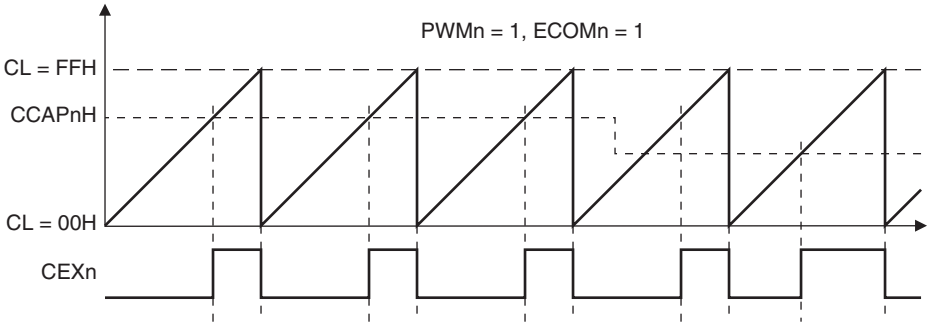

15.7 PCA Watchdog Timer

An on-board watchdog timer is available with the PCA to improve the reliability of the system without increasing chip count. Watchdog timers are useful for systems that are susceptible to noise, power glitches, or electrostatic discharge. Module 4 is the only PCA module that can be programmed as a watchdog. However, this module can still be used for other modes if the watchdog is not needed. Figure 15-4 shows a diagram of how the watchdog works. The user pre-loads a 16-bit value in the compare registers. Just like the other compare modes, this 16-bit value is compared to the PCA timer value. If a match is allowed to occur, an internal reset will be generated. This reset will not cause the RST pin to be driven active.

In order to hold off the reset, the user has three options:

1. Periodically change the compare value so it will never match the PCA timer.
2. Periodically change the PCA timer value so it will never match the compare values.
3. Disable the watchdog by clearing the WDTE bit before a match occurs and then re-enable it.

The first two options are more reliable because the watchdog timer is never disabled as in option #3. If the program counter ever goes astray, a match will eventually occur and cause an internal reset. The second option is also not recommended if other PCA modules are being used. Remember, the PCA timer is the time base for all modules; changing the time base for other modules would not be a good idea. Thus, in most applications the first solution is the best option.

This watchdog timer won't generate a reset out on the reset pin. Only the Hardware Watchdog can generate a board-level reset.

16. Hardware Watchdog Timer

The programmable Hardware Watchdog Timer (WDT) protects the system from incorrect execution by triggering a system reset when it times out after the software has failed to feed the timer prior to the timer overflow. Each WDT clock cycle depends on the Timer Prescaler (see Section 6.9 on page 48). By Default the WDT counts every 6 CPU clock cycles since TPS = 5. The prescaler bits, PS0, PS1 and PS2 in SFR WDTPRG are used to set the period of the Watchdog Timer from 16K to 2048K WDT clock cycles. The WDT is disabled by Reset and during Power-down mode. When the WDT times out without being serviced, a RST pulse last 96 system clocks (48 system clocks in X2 Mode) is generated to reset the CPU. This reset is also driven out on the RST pin (see Section 7.4 on page 54) if the DISRTO bit in WDTPRG is not set. See Table 16-1 for the available WDT period selections

$$\text{Time-out Period} = \frac{2^{(\text{WTO}+14)}}{f_{\text{SYS}}} \times (\text{TPS}+1)$$

The Watchdog Timer consists of a 14-bit timer with 7-bit programmable prescaler. Writing the sequence 1EH/E1H to the WDTRST register enables the timer. When the WDT is enabled, the WDTEN bit in WDTPRG will be set to "1". To prevent the WDT from generating a reset when if overflows, the watchdog feed sequence must be written to WDTRST before the end of the time-out period. To feed the watchdog, two write instructions must be sequentially executed successfully. Between the two write instructions, SFR reads are allowed, but writes are not allowed. The instructions should move 1EH to the WDTRST register and then 1EH to the WDTRST register. An incorrect feed or enable sequence will cause an immediate watchdog reset.

The program sequence to feed or enable the watchdog timer is as follows:

```
MOV WDTRST, #01Eh
MOV WDTRST, #0E1h
```

Table 16-1. Watchdog Timer Time-out Period Selection

WDT Prescaler Bits			Period() (Clock Cycles)
PS2	PS1	PS0	
0	0	0	16K x (TPS+1)
0	0	1	32K x (TPS+1)
0	1	0	64K x (TPS+1)
0	1	1	128K x (TPS+1)
1	0	0	256K x (TPS+1)
1	0	1	512K x (TPS+1)
1	1	0	1024K x (TPS+1)
1	1	1	2048K x (TPS+1)

The WDT time-out period is dependent on the system clock frequency.

16.1 Software Reset

A Software Reset of the AT89LP51RB2/RC2/IC2 is accomplished by writing the software reset sequence 5AH/A5H to the WDTRST SFR. The WDT does not need to be enabled to generate the software reset. A normal software reset will set the SWRST flag in WDTCON. However, if at any time an incorrect sequence is written to WDTRST (i.e. anything other than 1EH/E1H or 5AH/A5H), a software reset will immediately be generated and both the SWRST and WDTOVF flags will be set. In this manner an intentional software reset may be distinguished from a software error-generated reset. The program sequence to generate a software reset is as follows:

```
MOV WDTRST, #05Ah
MOV WDTRST, #0A5h
```

A software reset has the same duration as the normal watchdog reset and will also generate a reset pulse on the RST pin unless DISRTO is set.

16.2 WDT Registers

Table 16-2. WDTPRG – Watchdog Control Register

WDTPRG Address = A7H — Reset Value = xx00 0000B

Not Bit Addressable

	WDTOVF	SWRST	WDTEN	WDIDLE	DISRTO	WTO2	WTO1	WTO0
Bit	7	6	5	4	3	2	1	0

Symbol	Function
WDTOVF	**Watchdog Overflow Flag** Set by hardware when a WDT rest is generated by the WDT timer overflow. Also set when an incorrect sequence is written to WDTRST. Must be cleared by software.
SWRST	**Software Reset Flag** Set by hardware when a software reset is generated by writing the sequence 5AH/A5H to WDTRST. Also set when an incorrect sequence is written to WDTRST. Must be cleared by software.
WDTEN	**Watchdog Enable Flag** This bit is READ-ONLY and reflects the status of the WDT (whether it is running or not). The WDT is disabled after any reset and must be re-enabled by writing 1EH/E1H to WDTRST
WDIDLE	**WDT Disable During Idle** When WDIDLE = 0 the WDT continues to count in Idle mode. When WDIDLE = 1 the WDT halts counting in Idle mode.
DISRTO	**Disable Reset Output** When DISTRO = 0 the reset pin is driven to the same level as POL when the WDT resets. When DISRTO = 1 the reset pin is input only.
WTO2 WTO1 WTO0	**Watchdog Tiemout** Prescaler bits for the watchdog timer (WDT). When all three bits are cleared to 0, the watchdog timer has a nominal period of 16K clock cycles. When all three bits are set to 1, the nominal period is 2048K clock cycles.

Table 16-3. WDTRST – Watchdog Reset Register

WDTRST Address = A6H — **(Write-Only)**

Not Bit Addressable

	–	–	–	–	–	–	–	–
Bit	7	6	5	4	3	2	1	0

The WDT is enabled by writing the sequence 1EH/E1H to the WDTRST SFR. The current status may be checked by reading the WDTEN bit in WDTPRG. To prevent the WDT from resetting the device, the same sequence 1EH/E1H must be written to WDTRST before the time-out interval expires. A software reset is generated by writing the sequence 5AH/A5H to WDTRST.

17. Serial Interface (UART)

The serial interface on the AT89LP51RB2/RC2/IC2 implements a Universal Asynchronous Receiver/Transmitter (UART). The UART has the following features:

- Full-duplex Operation
- 8 or 9 Data Bits
- Framing Error Detection
- Multiprocessor Communication Mode with Automatic Address Recognition
- Baud Rate Generator Using Timer 1, Timer 2 or dedicated Internal Baud Rate Generator
- Interrupt on Receive Buffer Full or Transmission Complete
- Synchronous SPI or TWI Master Emulation

The serial interface is full-duplex, which means it can transmit and receive simultaneously. It is also receive-buffered, which means it can begin receiving a second byte before a previously received byte has been read from the receive register. (However, if the first byte still has not been read when reception of the second byte is complete, one of the bytes will be lost.) The serial port receive and transmit registers are both accessed at the Special Function Register SBUF. Writing to SBUF loads the transmit register, and reading SBUF accesses a physically separate receive register. The serial port can operate in the following four modes.

- **Mode 0:** Serial data enters and exits through RXD. TXD outputs the shift clock. Eight data bits are transmitted/received, with the LSB first. The baud rate is programmable to 1/6 or 1/3 the system frequency in Compatibility mode, 1/4 or 1/2 the system frequency in Fast mode, or variable based on Time 1.
- **Mode 1:** 10 bits are transmitted (through TXD) or received (through RXD): a start bit (0), 8 data bits (LSB first), and a stop bit (1). On receive, the stop bit goes into RB8 in the Special Function Register SCON. The baud rate is variable based on Timer 1 or Timer 2.
- **Mode 2:** 11 bits are transmitted (through TXD) or received (through RXD): a start bit (0), 8 data bits (LSB first), a programmable 9th data bit, and a stop bit (1). On transmit, the 9th data bit (TB8 in SCON) can be assigned the value of “0” or “1”. For example, the parity bit (P, in the PSW) can be moved into TB8. On receive, the 9th data bit goes into RB8 in the Special Function Register SCON, while the stop bit is ignored. The baud rate is programmable to either 1/16 or 1/32 the system frequency.
- **Mode 3:** 11 bits are transmitted (through TXD) or received (through RXD): a start bit (0), 8 data bits (LSB first), a programmable 9th data bit, and a stop bit (1). In fact, Mode 3 is the same as Mode 2 in all respects except the baud rate, which is variable based on Timer 1 or Timer 2 in Mode 3.

In all four modes, transmission is initiated by any instruction that uses SBUF as a destination register. Reception is initiated in Mode 0 by the condition RI = 0 and REN = 1. Reception is initiated in the other modes by the incoming start bit if REN = 1.

Table 17-1. SCON – Serial Port Control Register

SCON Address = 98H — Reset Value = 0000 0000B

Bit Addressable

	SM0/FE	SM1	SM2	REN	TB8	RB8	T1	RI
Bit	7	6	5	4	3	2	1	0

(SMOD0 = 0/1)[1]

Symbol	Function
FE	**Framing Error Bit** This bit is set by the receiver when an invalid stop bit is detected. The FE bit is not cleared by valid frames and must be cleared by software. The SMOD0 bit must be set to enable access to the FE bit. FE will be set regardless of the state of SMOD0.
SM0	**Serial Port Mode Bit 0** Refer to SM1 for serial port mode selection. SMOD0 must = 0 to access bit SM0.
SM1	**Serial Port Mode Bit 1** **SM0 / SM1 / Mode / Description / Baud Rate (Compat.)[2] / Baud Rate (Fast)[2]** 0 / 0 / 0 / shift register / $f_{SYS}/3$ or $f_{SYS}/6$ or Timer 1 / $f_{SYS}/2$ or $f_{SYS}/4$ or Timer 1 0 / 1 / 1 / 8-bit UART / variable (Timer 1 or Timer 2) / variable (Timer 1 or Timer 2) 1 / 0 / 2 / 9-bit UART / $f_{SYS}/32$ or $f_{SYS}/16$ / $f_{SYS}/32$ or $f_{SYS}/16$ 1 / 1 / 3 / 9-bit UART / variable (Timer 1 or Timer 2) / variable (Timer 1 or Timer 2)
SM2	**Multiprocessor Communications Enable** Enables the Automatic Address Recognition feature in Modes 2 or 3. If SM2 = 1 then RI will not be set unless the received 9th data bit (RB8) is 1, indicating an address, and the received byte is a Given or Broadcast Address. In Mode 1, if SM2 = 1 then RI will not be activated unless a valid stop bit was received, and the received byte is a Given or Broadcast Address. In Mode 0, SM2 determines the idle state of the shift clock such that the clock is the inverse of SM2, i.e. when SM2 = 0 the clock idles high and when SM2 = 1 the clock idles low.
REN	**Serial Reception Enable** Set by software to enable reception. Clear by software to disable reception.
TB8	**Transmitter Bit 8** The 9th data bit that will be transmitted in Modes 2 and 3. Set or clear by software as desired. In Mode 0, setting TB8 enables Timer 1 as the shift clock generator.
RB8	**Receiver Bit 8** In Modes 2 and 3, the 9th data bit that was received. In Mode 1, if SM2 = 0, RB8 is the stop bit that was received. In Mode 0, RB8 is not used.
TI	**Transmit Interrupt Flag** Set by hardware at the end of the 8th bit time in Mode 0, or at the beginning of the stop bit in the other modes, in any serial transmission. Must be cleared by software.
RI	**Receive Interrupt Flag** Set by hardware at the end of the 8th bit time in Mode 0, or halfway through the stop bit time in the other modes, in any serial reception (except see SM2). Must be cleared by software.

Notes: 1. SMOD0 is located at PCON.6.
2. f_{SYS} = system frequency. The baud rate depends on SMOD1 (PCON.7).

17.1 Multiprocessor Communications

Modes 2 and 3 have a special provision for multiprocessor communications. In these modes, 9 data bits are received, followed by a stop bit. The 9th bit goes into RB8. Then comes a stop bit. The port can be programmed such that when the stop bit is received, the serial port interrupt is activated only if RB8 = 1. This feature is enabled by setting bit SM2 in SCON.

The following example shows how to use the serial interrupt for multiprocessor communications. When the master processor must transmit a block of data to one of several slaves, it first sends out an address byte that identifies the target slave. An address byte differs from a data byte in that the 9th bit is “1” in an address byte and “0” in a data byte. With SM2 = 1, no slave is interrupted by a data byte. An address byte, however, interrupts all slaves. Each slave can examine the received byte and see if it is being addressed. The addressed slave clears its SM2 bit and prepares to receive the data bytes that follows. The slaves that are not addressed set their SM2 bits and ignore the data bytes. See “Automatic Address Recognition” on page 114.

The SM2 bit can be used to check the validity of the stop bit in Mode 1. In a Mode 1 reception, if SM2 = 1, the receive interrupt is not activated unless a valid stop bit is received.

17.2 Baud Rates

The baud rate in Mode 0 depends on the value of the SMOD1 bit in Special Function Register PCON.7. If SMOD1 = 0 (the value on reset) and TB8 = 0, the baud rate is 1/4 of the system frequency in Fast mode. If SMOD1 = 1 and TB8 = 0, the baud rate is 1/2 of the system frequency, as shown in the following equation:

$$\underset{TB8 = 0}{\text{Mode 0 Baud Rate}} = \frac{2^{SMOD1}}{4} \times \text{System Frequency}$$

In Compatibility mode the baud rate is 1/6 of the system frequency, scaling to 1/3 when SMOD1 = 1.

$$\underset{TB8 = 0}{\text{Mode 0 Baud Rate}} = \frac{2^{SMOD1}}{6} \times \text{System Frequency}$$

Mode 0 can also be generated from either Timer 1 or the Internal Baud Rate Generator by setting TB8 in SCON or SRC in BDRCON respectively.

The baud rate in Mode 2 also depends on the value of the SMOD1 bit. If SMOD1 = 0, the baud rate is 1/32 of the system frequency. If SMOD1 = 1, the baud rate is 1/16 of the system frequency, as shown in the following equation:

$$\text{Mode 2 Baud Rate} = \frac{2^{SMOD1}}{32} \times \text{System Frequency}$$

The baud rate in Modes 1 and 3 is generated from one of Timer 1, Timer 2 or the Internal Baud Rate Generator as detailed in Table 17-2.

Table 17-2. UART Baud Rate Selection Table for Modes 1 and 3

TCLK (T2CON.4)	RCLK (T2CON.5)	TBCK (BDRCON.3)	RBCK (BDRCON.2)	Clock Source UART Tx	Clock Source UART Rx
0	0	0	0	Timer 1	Timer 1
1	0	0	0	Timer 2	Timer 1
0	1	0	0	Timer 1	Timer 2
1	1	0	0	Timer 2	Timer 2
X	0	1	0	BRG	Timer 1
X	1	1	0	BRG	Timer 2
0	X	0	1	Timer 1	BRG
1	X	0	1	Timer 2	BRG
X	X	1	1	BRG	BRG

17.2.1 Using Timer 1 to Generate Baud Rates

Setting TB8 = 1 in Mode 0 enables Timer 1 as the baud rate generator. When Timer 1 is the baud rate generator for Mode 0, the baud rates are determined by the Timer 1 overflow rate and the value of SMOD1 according to the following equation:

$$\underset{\text{TB8 = 1}}{\text{Mode 0 Baud Rate}} = \frac{2^{\text{SMOD1}}}{4} \times \text{(Timer 1 Overflow Rate)}$$

The Timer 1 overflow rate normally determines the baud rates in Modes 1 and 3. When Timer 1 is the baud rate generator, the baud rates are determined by the Timer 1 overflow rate and the value of SMOD1 according to the following equation:

$$\underset{\text{Baud Rate}}{\text{Modes 1, 3}} = \frac{2^{\text{SMOD1}}}{32} \times \text{(Timer 1 Overflow Rate)}$$

The Timer 1 interrupt should be disabled in this application. The Timer itself can be configured for either timer or counter operation in any of its 3 running modes. In the most typical applications, it is configured for timer operation in auto-reload mode (high nibble of TMOD = 0010B). In this case, the baud rate is given by the following formula:

$$\underset{\text{Baud Rate}}{\text{Modes 1, 3}} = \frac{2^{\text{SMOD1}}}{32} \times \frac{\text{System Frequency}}{[256 - (\text{TH1})]} \times \frac{1}{\text{TPS} + 1}$$

Table 17-3 lists commonly used baud rates and how they can be obtained from Timer 1.

Table 17-3. Commonly Used Baud Rates Generated by Timer 1

Baud Rate	f_{OSC} (MHz)	X2	SMOD1	Timer 1			
				C/$\overline{T}$	Mode	TPS	Reload Value
Mode 0 Max: 6 MHz	12	1	1	X	X	0	X
Mode 2 Max: 750K	12	1	1	X	X	0	X
Modes 1, 3 Max: 750K	12	1	1	0	2	0	F4H
19.2K	11.059	1	1	0	2	0	DCH
9.6K	11.059	1	0	0	2	0	DCH
4.8K	11.059	1	0	0	2	0	B8H
2.4K	11.059	1	0	0	2	0	70H
1.2K	11.059	1	0	0	1	0	FEE0H
137.5	11.986	1	0	0	1	0	F55CH
110	6	1	1	0	1	0	F2AFH
110	12	1	0	0	1	0	F2AFH
19.2K	11.059	0	1	0	2	5	FDH
9.6K	11.059	0	0	0	2	5	FDH
4.8K	11.059	0	0	0	2	5	FAH
2.4K	11.059	0	0	0	2	5	F4H
1.2K	11.059	0	0	0	2	5	E8H
137.5	11.986	0	0	0	2	5	1DH
110	6	0	0	0	2	5	72H
110	12	0	0	0	1	5	FEEBH

17.2.2 Using Timer 2 to Generate Baud Rates

Timer 2 is selected as the baud rate generator by setting TCLK and/or RCLK in T2CON. Under these conditions, the baud rates for transmit and receive can be simultaneously different by using Timer 1 for transmit and Timer 2 for receive, or vice versa. The baud rate generator mode is similar to the auto-reload mode, in that a rollover causes the Timer 2 registers to be reloaded with the 16-bit value in registers RCAP2H and RCAP2L, which are preset by software. In this case, the baud rates in Modes 1 and 3 are determined by Timer 2's overflow rate according to the following equation:

$$\begin{matrix}\text{Modes 1 and 3}\\ \text{Baud Rate}\end{matrix} = \frac{1}{16} \times \frac{\text{System Frequency}}{[65536 - (\text{RCAP2H,RCAP2L})]}$$

Table 17-4 lists commonly used baud rates and how they can be obtained from Timer 2. Note that TPS and T2X2 do not apply to Timer 2 in baud rate mode.

Table 17-4. Commonly Used Baud Rates Generated by Timer 2

Baud Rate	f_{OSC} (MHz)	X2	Timer 2			
			CP/$\overline{RL2}$	C/$\overline{T2}$	TCLK or RCLK	Reload Value
Max: 750K	12	1	0	0	1	FFFFH
19.2K	11.059	1	0	0	1	FFDCH
9.6K	11.059	1	0	0	1	FFB8H
4.8K	11.059	1	0	0	1	FF70H
2.4K	11.059	1	0	0	1	FEE0H
1.2K	11.059	1	0	0	1	FDC0H
137.5	11.986	1	0	0	1	EAB8H
110	6	1	0	0	1	F2AFH
110	12	1	0	0	1	E55EH
19.2K	11.059	0	0	0	1	FFEEH
9.6K	11.059	0	0	0	1	FFDCH
4.8K	11.059	0	0	0	1	FFB8H
2.4K	11.059	0	0	0	1	FF70H
1.2K	11.059	0	0	0	1	FEE0H
137.5	11.986	0	0	0	1	F55CH
110	12	0	0	0	1	F2AFH

17.2.3 Internal Baud Rate Generator (BRG)

The AT89LP51RB2/RC2/IC2 includes an Internal Baud Rate Generator (BRG) for UART modes 1 and 3 that can free up Timer 1 or Timer 2 for other uses. The BRG is an 8-bit counter with reload as shown in Figure 17-1. On overflow, the BRG is loaded with the value of BRL. The BRG is controlled by the BDRCON register (See Table 17-7). The BRG operates when BRR = 1. The SPD bit determines the clock source: either the system clock divided-by-6 or the system clock with no division. The BRG is not affected by the Timer Prescaler; however, it is affected by the SMOD1 bit in PCON. The following equation shows the baud rate calculation using the BRG:

$$\text{Baud Rate} = \frac{2^{\text{SMOD1}}}{32} \times \frac{f_{\text{SYS}}}{256 - (\text{BRL})} \times \frac{1}{6^{(1 - \text{SPD})}}$$

The output of the Internal Baud Rate Generator can be independently selected for the transmit and receive clocks using the TBCK and RBCK bits in BDRCON. These bits have priority over the TCLK and TCLK bits in T2CON as shown in Table 17-2. Table 17-5 lists some common baud rates generated by the BRG.

Figure 17-1. Internal Baud Rate Generator

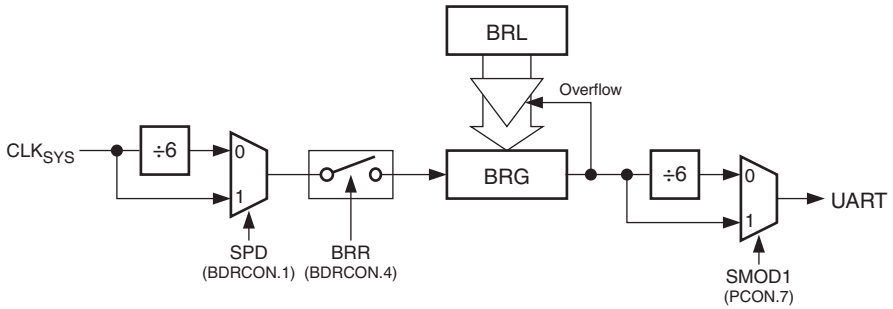

Table 17-5. Commonly Used Baud Rates Generated by BRG

Baud Rate	X2	SMOD1	SPD	f_{osc} = 16.384 MHz		f_{osc} = 24 MHz	
				BRL	Error (%)	BRL	Error (%)
115200	1	1	1	247	1.23	243	0.16
57600	1	1	1	238	1.23	230	0.16
38400	1	1	1	229	1.23	217	0.16
28800	1	1	1	220	1.23	204	0.16
19200	1	1	1	203	0.63	178	0.16
9600	1	1	1	149	0.31	100	0.16
4800	1	1	1	43	1.23	–	–
4800	0	0	0	247	1.23	243	0.16
2400	0	0	0	238	1.23	230	0.16
1200	0	0	0	220	1.23	202	3.55
600	0	0	0	185	0.16	152	0.16

Table 17-6. BRL – Baud Rate Reload Register

BRL Address = 09AH — Reset Value = 0000 0000B

Not Bit Addressable

Bit	7	6	5	4	3	2	1	0

Symbol	Function
BRL_{7-0}	**Baud Rate Reload Value** Holds the 8-bit reload value of the Internal Baud Rate Generator. This value is loaded into the BRG when the BRG overflows from FFH to 00H.

Table 17-7. BDRCON – Baud Rate Control Register

BDRCON Address = 9BH — Reset Value = xxx0 0000B

Not Bit Addressable

	–	–	–	BRR	TBCK	RBCK	SPD	SRC
Bit	7	6	5	4	3	2	1	0

Symbol	Function
BRR	**Baud Rate Run Control** Clear to stop the Internal Baud Rate Generator. Set to start the Internal Baud Rate Generator.
TBCK	**Transmission Baud Rate Select** Clear to select Timer 1 or Timer 2 overflow as transmit clock for the serial port. Set to select the Internal Baud Rate Generator as transmit clock for the serial port.
RBCK	**Receive Baud Rate Select** Clear to select Timer 1 or Timer 2 overflow as receive clock for the serial port. Set to select the Internal Baud Rate Generator as receive clock for the serial port.
SPD	**BRG Speed Control** Clear to select the SLOW baud rate generator mode. Set to select the FAST baud rate generator mode.
SRC	**Baud Rate Source for Mod e 0** Clear to select fixed or Timer 1 clock source for UART mode 0. Set to select BRG for UART mode 0.

17.3 Framing Error Detection

In addition to all of its usual modes, the UART can perform framing error detection by looking for missing stop bits. When used for framing error detect, the UART looks for missing stop bits in the communication. A missing bit will set the FE bit in the SCON register. The FE bit shares the SCON.7 bit with SM0 and the function of SCON.7 is determined by PCON.6 (SMOD0). If SMOD0 is set then SCON.7 functions as FE. SCON.7 functions as SM0 when SMOD0 is cleared. When used as FE, SCON.7 can only be cleared by software. The FE bit will be set by a framing error regardless of the state of SMOD0.

17.4 Automatic Address Recognition

Automatic Address Recognition is a feature which allows the UART to recognize certain addresses in the serial bit stream by using hardware to make the comparisons. This feature saves a great deal of software overhead by eliminating the need for the software to examine every serial address which passes by the serial port. This feature is enabled by setting the SM2 bit in SCON for Modes 1, 2 or 3. In the 9-bit UART modes, Mode 2 and Mode 3, the Receive Interrupt flag (RI) will be automatically set when the received byte contains either the “Given” address or the “Broadcast” address. The 9-bit mode requires that the 9th information bit be a “1” to indicate that the received information is an address and not data.

In Mode 1 (8-bit) the RI flag will be set if SM2 is enabled and the information received has a valid stop bit following the 8th address bits and the information is either a Given or Broadcast address. Using the Automatic Address Recognition feature allows a master to selectively communicate with one or more slaves by invoking the given slave address or addresses. All of the slaves may be contacted by using the Broadcast address. Automatic Address Recognition is not available during Mode 0.

17.4.1 Given Address

Two special Function Registers are used to define the slave's address, SADDR (A9H), and the address mask, SADEN (B9H). SADEN is used to define which bits in the SADDR are to be used and which bits are "don't care". The SADEN mask can be logically ANDed with the SADDR to create the "Given" address which the master will use for addressing each of the slaves. Use of the Given address allows multiple slaves to be recognized while excluding others. The following examples show the versatility of this scheme:

Slave 0
SADDR = 1100 0000
SADEN = 1111 1101
Given = 1100 00X0

Slave 1
SADDR = 1100 0000
SADEN = 1111 1110
Given = 1100 000X

In the previous example, SADDR is the same and the SADEN data is used to differentiate between the two slaves. Slave 0 requires a "0" in bit 0 and it ignores bit 1. Slave 1 requires a "0" in bit 1 and bit 0 is ignored. A unique address for slave 0 would be 1100 0010 since slave 1 requires a "0" in bit 1. A unique address for slave 1 would be 1100 0001 since a "1" in bit 0 will exclude slave 0. Both slaves can be selected at the same time by an address which has bit 0 = 0 (for slave 0) and bit 1 = 0 (for slave 1). Thus, both could be addressed with 1100 0000.

In a more complex system, the following could be used to select slaves 1 and 2 while excluding slave 0:

Slave 0
SADDR = 1100 0000
SADEN = 1111 1001
Given = 1100 0XX0

Slave 1
SADDR = 1110 0000
SADEN = 1111 1010
Given = 1110 0X0X

Slave 2
SADDR = 1110 0000
SADEN = 1111 1100
Given = 1110 00XX

In the above example, the differentiation among the 3 slaves is in the lower 3 address bits. Slave 0 requires that bit 0 = 0 and it can be uniquely addressed by 1110 0110. Slave 1 requires that bit 1 = 0 and it can be uniquely addressed by 1110 and 0101. Slave 2 requires that bit 2 = 0 and its unique address is 1110 0011. To select Slaves 0 and 1 and exclude Slave 2, use address 1110 0100, since it is necessary to make bit 2 = 1 to exclude slave 2.

Upon reset the SADDR and SADEN registers are loaded with "0"s. This produces a given address of all "don't cares" as well as a Broadcast address of all "don't cares". This effectively disables the Automatic Addressing mode and allows the microcontroller to use standard 80C51-type UART drivers which do not make use of this feature.

17.4.2 Broadcast Address

The Broadcast Address for each slave is created by taking the logic OR of SADDR and SADEN. Zeros in this result are trended as don't cares. In most cases, interpreting the don't cares as ones, the broadcast address will be FF hexadecimal.

Table 17-8. SADDR – Slave Address Register

SADDR Address = 0A9H — Reset Value = 0000 0000B

Not Bit Addressable

Bit	7	6	5	4	3	2	1	0

Symbol	Function
$SADDR_{7-0}$	**UART Slave Address** When SM2 = 1, SADDR holds the 8-bit address for the UART multiprocessor communication mode. This address is combined with SADEN to create the given and broadcast addresses for the device.

Table 17-9. SADEN – Slave Address Mask Register

SADEN Address = 0B9H — Reset Value = 0000 0000B

Not Bit Addressable

Bit	7	6	5	4	3	2	1	0

Symbol	Function
$SADEN_{7-0}$	**UART Slave Address Mask** When SM2 = 1, SADEN holds the 8-bit address mask for the UART multiprocessor communication mode. This address is combined with SADDR to create the given and broadcast addresses for the device.

17.5 More About Mode 0

In Mode 0, the UART is configured as a two wire half-duplex synchronous serial interface. In two-wire mode serial data enters and exits through RXD and TXD outputs the shift clock. Eight data bits are transmitted/received, with the LSB first. Figure 17-4 and Figure 17.6 on page 120 show simplified functional diagrams of the serial port in Mode 0 and associated timing. The baud rate is programmable to 1/2 or 1/4 the system frequency by setting/clearing the SMOD1 bit in Fast mode, or 1/3 or 1/6 the system frequency in Compatibility mode. However, changing SMOD1 has an effect on the relationship between the clock and data as described below. The baud rate can also be generated by Timer 1 by setting TB8 in SCON or the Internal Baud Rate Generator by setting SRC in BDRCON. Table 17-10 lists the baud rate options for Mode 0.

Table 17-10. Mode 0 Baud Rates

SRC	TB8	SMOD1	Baud Rate (Fast)	Baud Rate (Compatibility)
0	0	0	$f_{SYS}/4$	$f_{SYS}/6$
0	0	1	$f_{SYS}/2$	$f_{SYS}/3$
0	1	0	(Timer 1 Overflow) / 4	(Timer 1 Overflow) / 4
0	1	1	(Timer 1 Overflow) / 2	(Timer 1 Overflow) / 2
1	X	0	(BRG Overflow) / 2	(BRG Overflow) / 2
1	X	1	BRG Overflow	BRG Overflow

17.5.1 Two-Wire (Half-Duplex) Mode

Transmission is initiated by any instruction that uses SBUF as a destination register. The “write to SBUF” signal also loads a “1” into the 9th position of the transmit shift register and tells the TX Control Block to begin a transmission. The internal timing is such that one full bit slot may elapse between “write to SBUF” and activation of SEND.

SEND transfers the output of the shift register to the alternate output function line of P3.0, and also transfers Shift Clock to the alternate output function line of P3.1. As data bits shift out to the right, “0”s come in from the left. When the MSB of the data byte is at the output position of the shift register, the “1” that was initially loaded into the 9th position is just to the left of the MSB, and all positions to the left of that contain “0”s. This condition flags the TX Control block to do one last shift, then deactivate SEND and set TI.

Reception is initiated by the condition REN = 1 and RI = 0. At the next clock cycle, the RX Control unit writes the bits 11111110B to the receive shift register and activates RECEIVE in the next clock phase. RECEIVE enables Shift Clock to the alternate output function line of P3.1. As data bits come in from the right, “1”s shift out to the left. When the “0” that was initially loaded into the right-most position arrives at the left-most position in the shift register, it flags the RX Control block to do one last shift and load SBUF. Then RECEIVE is cleared and RI is set.

The relationship between the shift clock and data is determined by the combination of the SM2 and SMOD1 bits as listed in Table 17-11 and shown in Figure . The SM2 bit determines the idle state of the clock when not currently transmitting/receiving. The SMOD1 bit determines if the output data is stable for both edges of the clock, or just one.

Table 17-11. Mode 0 Clock and Data Modes

SM2	SMOD1	Clock Idle	Data Changes	Data Sampled
0	0	High	While clock is high	Positive edge of clock
0	1	High	Negative edge of clock	Positive edge of clock
1	0	Low	While clock is low	Negative edge of clock
1	1	Low	Negative edge of clock	Positive edge of clock

In Two-Wire configuration Mode 0 may be used as a hardware accelerator for software emulation of serial interfaces such as a half-duplex Serial Peripheral Interface (SPI) master in mode (0,0) or (1,1) or a Two-Wire Interface (TWI) in master mode. An example of Mode 0 emulating a TWI master device is shown in Figure 17-3. In this example, the start, stop, and acknowledge are handled in software while the byte transmission is done in hardware. Falling/rising edges on TXD are created by setting/clearing SM2. Rising/falling edges on RXD are forced by setting/clearing the P3.0 register bit. SM2 and P3.0 must be 1 while the byte is being transferred.

Mode 0 transfers data LSB first whereas SPI or TWI are generally MSB first. Emulation of these interfaces may require bit reversal of the transferred data bytes. The following code example reverses the bits in the accumulator:

```
EX:    MOV  R7, #8
REVRS: RLC  A              ; C << msb (ACC)
       XCH  A, R6
       RRC  A              ; msb (ACC) >> B
       XCH  A, R6
       DJNZ R7, REVRS
```

Figure 17-2. Mode 0 Waveforms (Two-Wire)

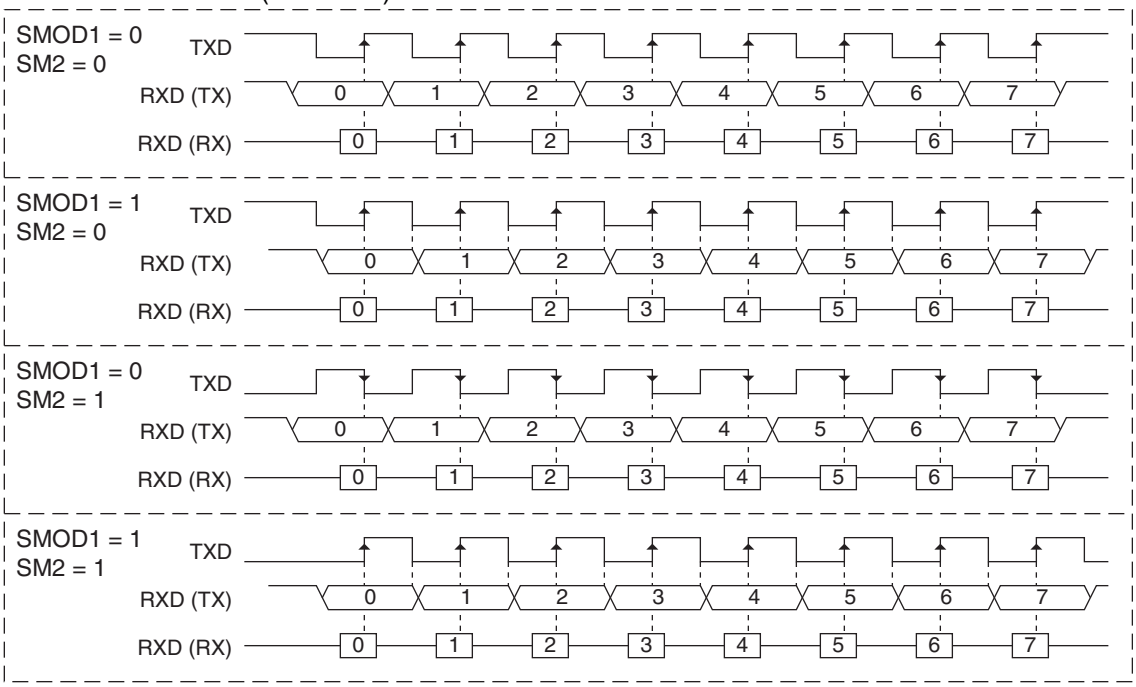

Figure 17-3. UART Mode 0 TWI Emulation (SMOD1 = 1)

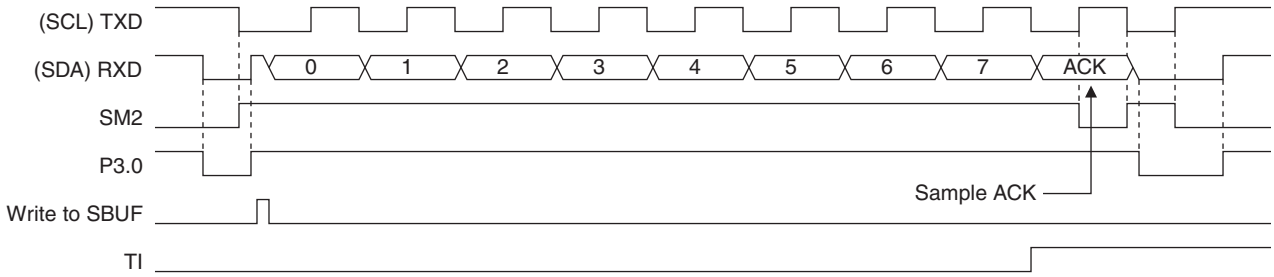

Figure 17-4. Serial Port Mode 0 (Two-Wire)

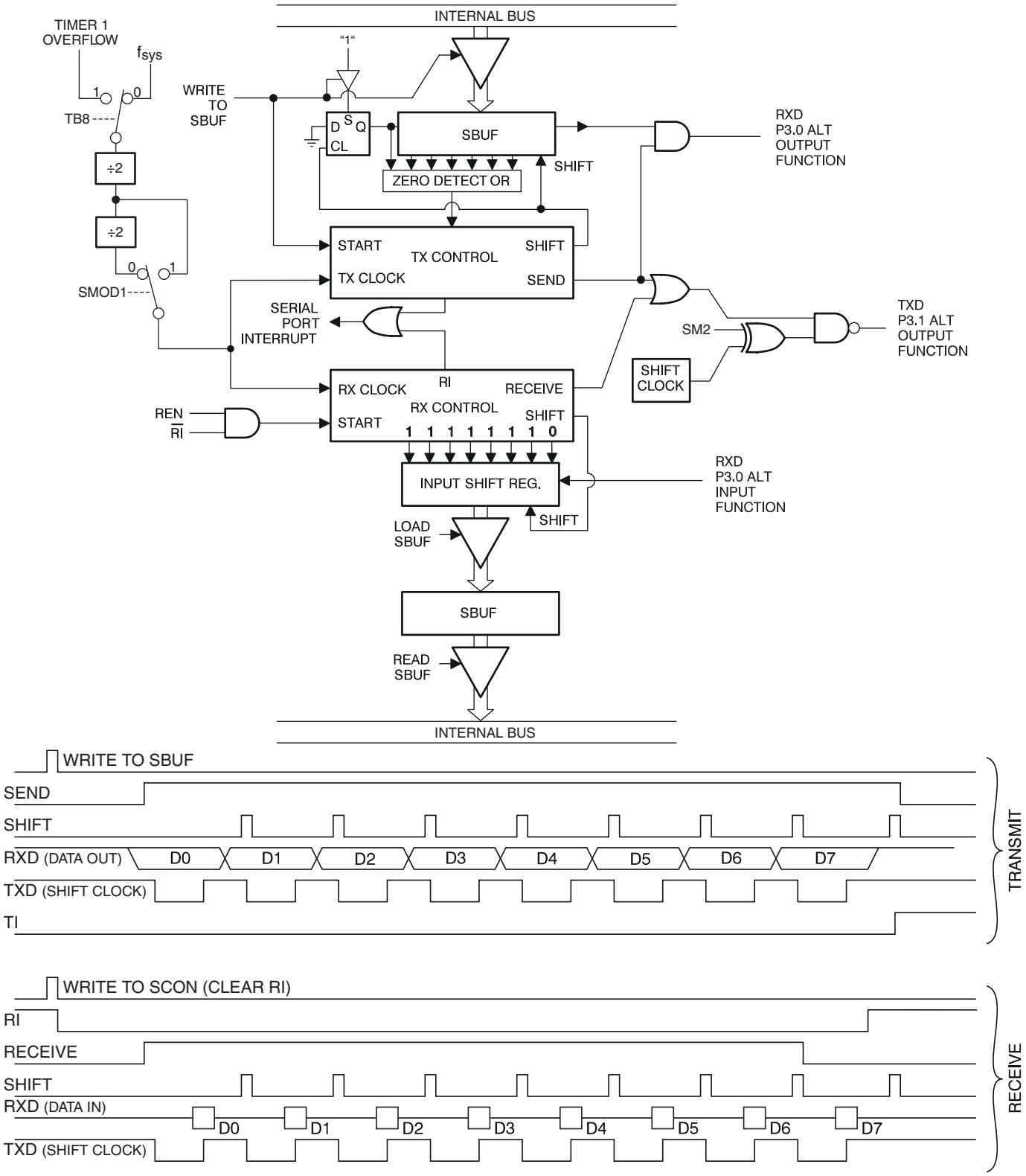

17.6 More About Mode 1

Ten bits are transmitted (through TXD), or received (through RXD): a start bit (0), 8 data bits (LSB first), and a stop bit (1). On receive, the stop bit goes into RB8 in SCON. In the AT89LP51RB2/RC2/IC2, the baud rate is determined either by the Timer 1 overflow rate, the TImer 2 overflow rate, or both. In this case one timer is for transmit and the other is for receive. Figure 17-5 shows a simplified functional diagram of the serial port in Mode 1 and associated timings for transmit and receive.

Transmission is initiated by any instruction that uses SBUF as a destination register. The “write to SBUF” signal also loads a “1” into the 9th bit position of the transmit shift register and flags the TX Control unit that a transmission is requested. Transmission actually commences at S1P1 of the machine cycle following the next rollover in the divide-by-16 counter. Thus, the bit times are synchronized to the divide-by-16 counter, not to the “write to SBUF” signal.

The transmission begins when $\overline{\text{SEND}}$ is activated, which puts the start bit at TXD. One bit time later, DATA is activated, which enables the output bit of the transmit shift register to TXD. The first shift pulse occurs one bit time after that.

As data bits shift out to the right, “0”s are clocked in from the left. When the MSB of the data byte is at the output position of the shift register, the “1” that was initially loaded into the 9th position is just to the left of the MSB, and all positions to the left of that contain “0”s. This condition flags the TX Control unit to do one last shift, then deactivate $\overline{\text{SEND}}$ and set TI. This occurs at the tenth divide-by-16 rollover after “write to SBUF.”

Reception is initiated by a 1-to-0 transition detected at RXD. For this purpose, RXD is sampled at a rate of 16 times the established baud rate. When a transition is detected, the divide-by-16 counter is immediately reset, and 1FFH is written into the input shift register. Resetting the divide-by-16 counter aligns its roll-overs with the boundaries of the incoming bit times.

The 16 states of the counter divide each bit time into 16ths. At the 7th, 8th, and 9th counter states of each bit time, the bit detector samples the value of RXD. The value accepted is the value that was seen in at least 2 of the 3 samples. This is done to reject noise. In order to reject false bits, if the value accepted during the first bit time is not 0, the receive circuits are reset and the unit continues looking for another 1-to-0 transition. If the start bit is valid, it is shifted into the input shift register, and reception of the rest of the frame proceeds.

As data bits come in from the right, “1”s shift out to the left. When the start bit arrives at the left-most position in the shift register, (which is a 9-bit register in Mode 1), it flags the RX Control block to do one last shift, load SBUF and RB8, and set RI. The signal to load SBUF and RB8 and to set RI is generated if, and only if, the following conditions are met at the time the final shift pulse is generated.

RI = 0 and

Either SM2 = 0, or the received stop bit = 1

If either of these two conditions is not met, the received frame is irretrievably lost. If both conditions are met, the stop bit goes into RB8, the 8 data bits go into SBUF, and RI is activated. At this time, whether or not the above conditions are met, the unit continues looking for a 1-to-0 transition in RXD.

Figure 17-5. Serial Port Mode 1

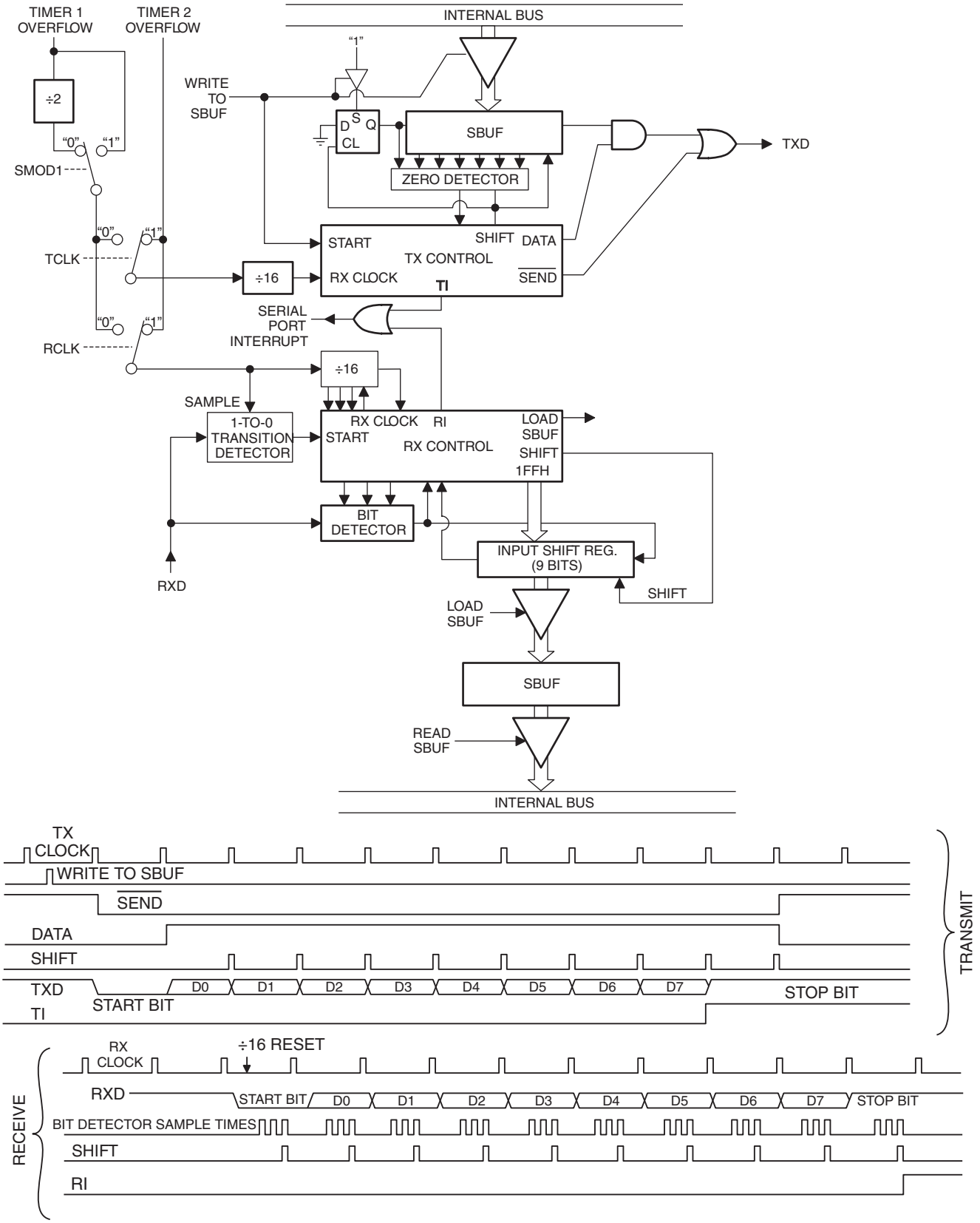

17.7 More About Modes 2 and 3

Eleven bits are transmitted (through TXD), or received (through RXD): a start bit (0), 8 data bits (LSB first), a programmable 9th data bit, and a stop bit (1). On transmit, the 9th data bit (TB8) can be assigned the value of “0” or “1”. On receive, the 9th data bit goes into RB8 in SCON. The baud rate is programmable to either 1/16 or 1/32 of the oscillator frequency in Mode 2. Mode 3 may have a variable baud rate generated from either Timer 1 or Timer 2, depending on the state of RCLK and TCLK.

Figures 17-6 and 17-7 show a functional diagram of the serial port in Modes 2 and 3. The receive portion is exactly the same as in Mode 1. The transmit portion differs from Mode 1 only in the 9th bit of the transmit shift register.

Transmission is initiated by any instruction that uses SBUF as a destination register. The “write to SBUF” signal also loads TB8 into the 9th bit position of the transmit shift register and flags the TX Control unit that a transmission is requested. Transmission commences at S1P1 of the machine cycle following the next rollover in the divide-by-16 counter. Thus, the bit times are synchronized to the divide-by-16 counter, not to the “write to SBUF” signal.

The transmission begins when $\overline{\text{SEND}}$ is activated, which puts the start bit at TXD. One bit time later, DATA is activated, which enables the output bit of the transmit shift register to TXD. The first shift pulse occurs one bit time after that. The first shift clocks a “1” (the stop bit) into the 9th bit position of the shift register. Thereafter, only “0”s are clocked in. Thus, as data bits shift out to the right, “0”s are clocked in from the left. When TB8 is at the output position of the shift register, then the stop bit is just to the left of TB8, and all positions to the left of that contain “0”s. This condition flags the TX Control unit to do one last shift, then deactivate SEND and set TI. This occurs at the 11th divide-by-16 rollover after “write to SBUF.”

Reception is initiated by a 1-to-0 transition detected at RXD. For this purpose, RXD is sampled at a rate of 16 times the established baud rate. When a transition is detected, the divide-by-16 counter is immediately reset, and 1FFH is written to the input shift register.

At the 7th, 8th and 9th counter states of each bit time, the bit detector samples the value of RXD. The value accepted is the value that was seen in at least 2 of the 3 samples. If the value accepted during the first bit time is not 0, the receive circuits are reset and the unit continues looking for another 1-to-0 transition. If the start bit proves valid, it is shifted into the input shift register, and reception of the rest of the frame proceeds.

As data bits come in from the right, “1”s shift out to the left. When the start bit arrives at the leftmost position in the shift register (which in Modes 2 and 3 is a 9-bit register), it flags the RX Control block to do one last shift, load SBUF and RB8, and set RI. The signal to load SBUF and RB8 and to set RI is generated if, and only if, the following conditions are met at the time the final shift pulse is generated:

RI = 0, and

Either SM2 = 0 or the received 9th data bit = 1

If either of these conditions is not met, the received frame is irretrievably lost, and RI is not set. If both conditions are met, the received 9th data bit goes into RB8, and the first 8 data bits go into SBUF. One bit time later, whether the above conditions were met or not, the unit continues looking for a 1-to-0 transition at the RXD input.

Note that the value of the received stop bit is irrelevant to SBUF, RB8, or RI.

Figure 17-6. Serial Port Mode 2

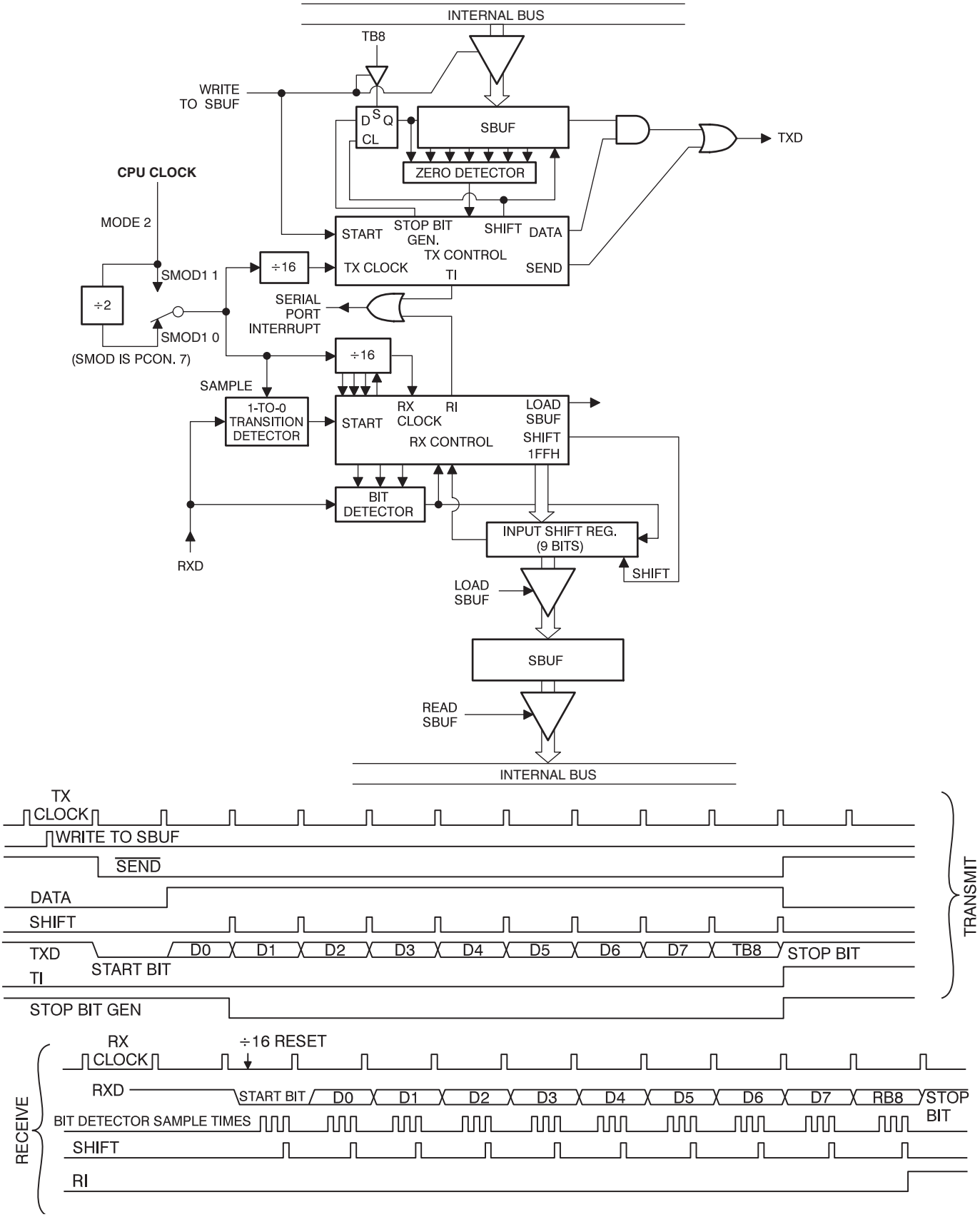

Figure 17-7. Serial Port Mode 3

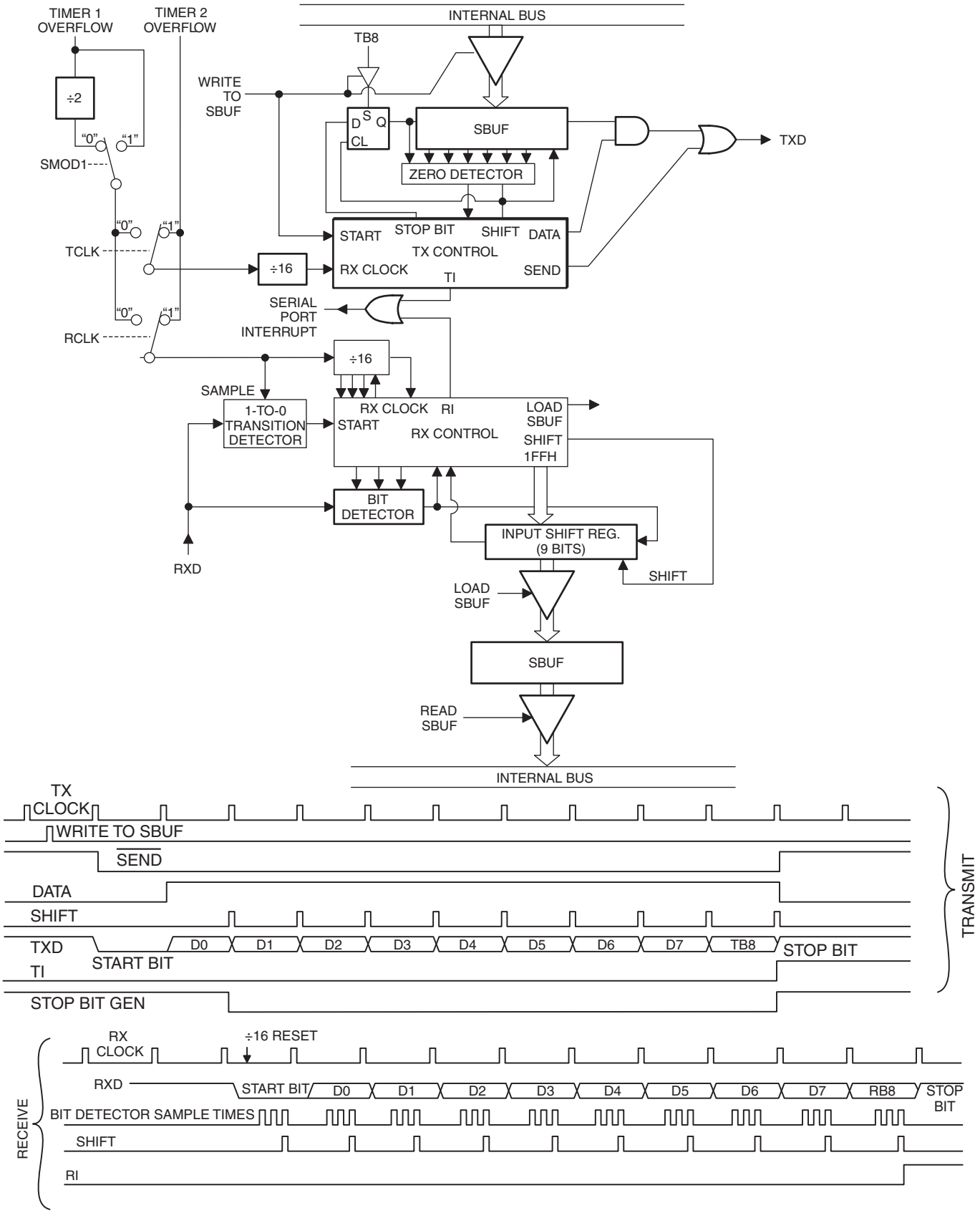

18. Enhanced Serial Peripheral Interface

The Serial Peripheral Interface (SPI) allows high-speed, full-duplex synchronous data transfer between the AT89LP51RB2/RC2/IC2 and peripheral devices or between multiple microcontroller devices, including multiple masters and slaves on a single bus. The SPI includes the following features:

- Full-duplex, 3-wire or 4-wire Synchronous Data Transfer
- Master or Slave Operation
- Maximum Bit Frequency = $f_{SYS}/2$
- LSB First or MSB First Data Transfer
- Seven Programmable Bit Rates or Timer 1-based Baud Generation (Master Mode)
- End of Transmission Interrupt Flag
- Write Collision Flag Protection
- Double-buffered Receive and Transmit
- Transmit Buffer Empty Interrupt Flag
- Mode Fault (Master Collision) Detection and Interrupt
- Wake up from Idle Mode

A block diagram of the SPI is shown below in Figure 18-1.

Figure 18-1. SPI Block Diagram

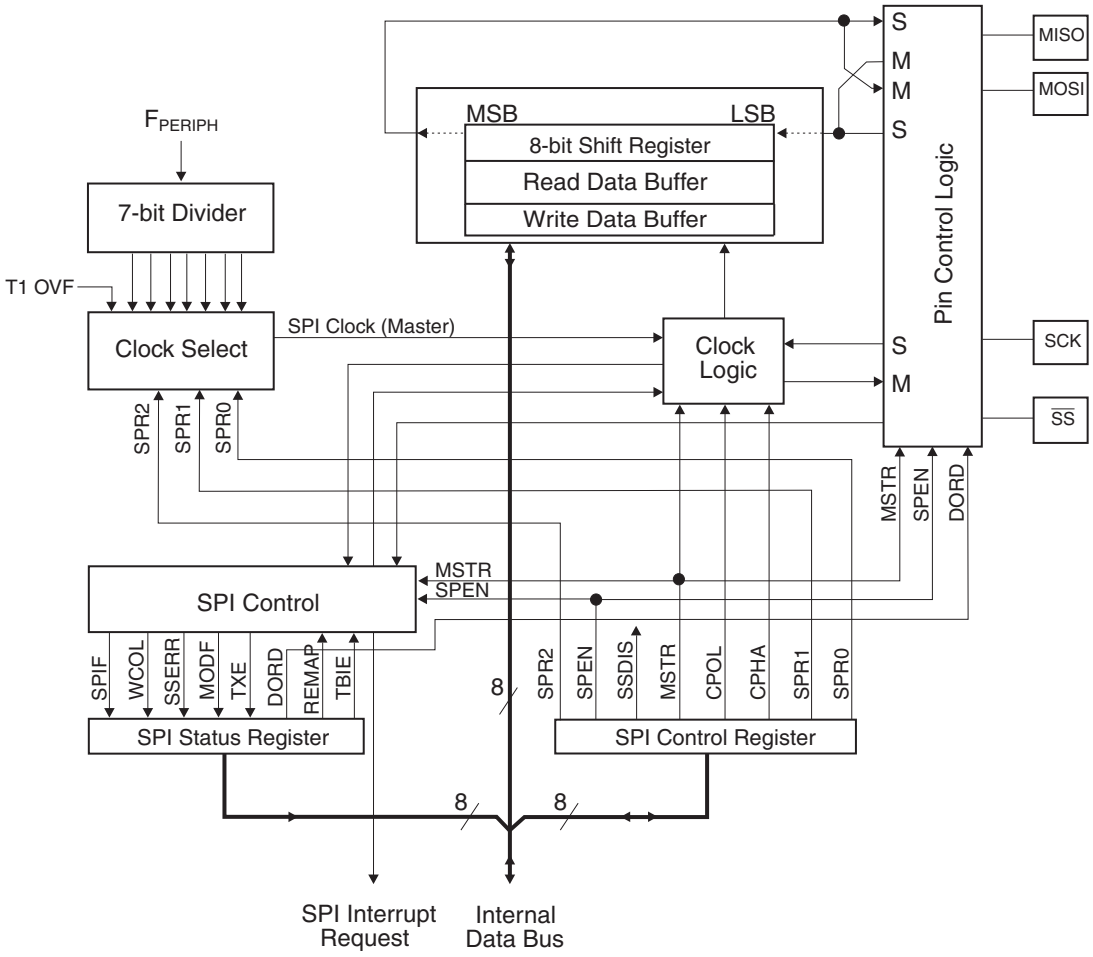

18.1 Interface Description

The interconnection between master and slave devices with SPI is shown in Figure . The four pins in the interface are Master-In/Slave-Out (MISO), Master-Out/Slave-In (MOSI), Serial Clock (SCK), and Slave Select ($\overline{SS}$). The MSTR bit in SPCON determines the directions of MISO and MOSI. Also notice that MOSI connects to MOSI and MISO to MISO. By default $\overline{SS}$ is an input to both master and slave devices. The master must drive the $\overline{SS}$ input of each slave device independently.

Figure 18-2. SPI Master-Slave Interconnection

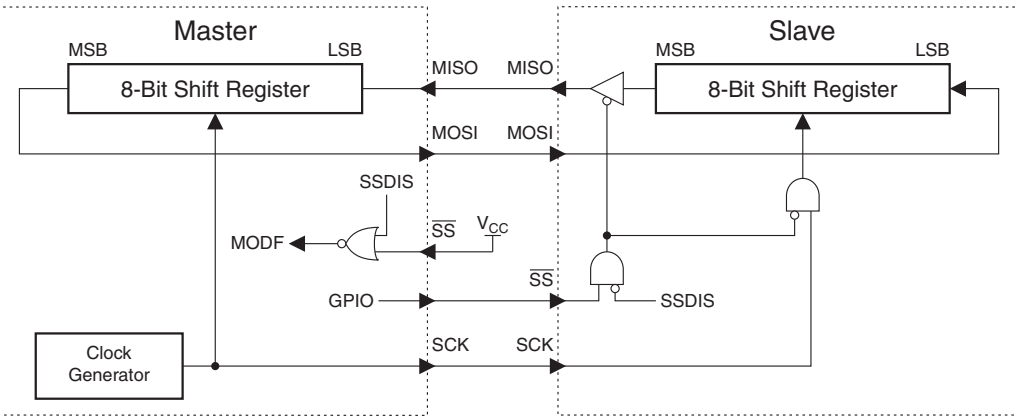

The location of the SPI pins is determined by the REMAP bit in SPSTA as shown in Table 18-1. When REMAP = 0, the pins are located in the same locations on Port 1 as the AT89C51RB2/RC2/IC2. When REMAP = 1 the pins are shuffled on Port 1 to be compatible with AT89S8253 and AT89LP6440. Note that the SPI-based In-System Programming (ISP) interface always uses the REMAP = 1 pins regardless of the REMAP setting.

Table 18-1. Serial Peripheral Interface Connections

		Pin Connection		Direction	
Name	**Function**	**REMAP = 0**	**REMAP = 1**	**MSTR = 1**	**MSTR = 0**
SCK	Serial Clock	P1.6	P1.7	OUT	IN
MISO	Master In / Slave Out	P1.5	P1.6	IN	OUT
MOSI	Master Out / Slave In	P1.7	P1.5	OUT	IN
$\overline{SS}$	Slave Select (Active-Low)	P1.1	P1.4	IN	IN

18.1.1 SPI Serial Clock (SCK)

This signal is used to synchronize the data movement both in and out of the devices through their MOSI and MISO lines. The SCK line is shared among all devices on the bus. It is driven by the master for eight clock cycles to exchange one byte on the serial lines. The SCK pin is a clock output in master mode and a clock input in slave mode. If multiple masters are present in a system, only one should drive the SCK line at a time.

In master mode, the baud rate of SCK is determined by the SPR bits in SPCON. The SPR bits select a value from a 7-bit prescaler on the system clock or the Timer 1 overflow. In slave mode the clock rate is set by the master device; the slave need not

18.1.2 Master Output / Slave Input (MOSI)

This 1-bit signal is directly connected between the master device and all slave devices. The MOSI line is used to transfer data in series from the master to the slave. Therefore, it is an output signal from the master, and an input signal to a slave. A byte (8-bit word) is normally transmitted most significant bit (MSB) first, least significant bit (LSB) last. The DORD bit in SPSTA can change the data ordering to LSB first and MSB last. All devices on the same bus should share the same data order. If multiple masters are present in a system, only one should drive the MOSI line at a time.

18.1.3 Master Input / Slave Output (MISO)

This 1-bit signal is directly connected between all slave devices and a master device. The MISO line is used to transfer data in series from a slave to the master. Therefore, it is an output signal from the slave, and an input signal to the master. A byte (8-bit word) is transmitted most significant bit (MSB) first, least significant bit (LSB) last. The DORD bit in SPSTA can change the data ordering to LSB first anf MSB last. All devices on the same bus should share the same data order. When multiple slaves are present in a system, only the slave with its $\overline{SS}$ input low will drive MISO.

18.1.4 Slave Select ($\overline{SS}$)

Each slave peripheral is selected by one Slave Select pin ($\overline{SS}$). This signal must stay low for any message for a slave. It is obvious that only one master can drive the network at a time. The master may select each slave device by software through port pins. To prevent bus conflicts on the MISO line, only one slave should be selected at a time by the master for a transmission.

In a master configuration, the $\overline{SS}$ line can be used in conjunction with the MODF flag in the SPI Status register (SPSTA) to prevent multiple masters from driving MOSI and SCK (see Error conditions).

A high level on the $\overline{SS}$ pin puts the MISO line of a Slave SPI in a high-impedance state.

The $\overline{SS}$ pin can be used as a general-purpose I/O if the following conditions are met:

- The device is configured as a Master and the SSDIS control bit in SPCON is set. This kind of configuration can be found when only one Master is driving the network and there is no way that the $\overline{SS}$ pin could be pulled low. Therefore, the MODF flag in the SPSTA will never be set[(1)].
- The Device is configured as a Slave with CPHA and SSDIS control bits set[(2)]. This kind of configuration can happen when the system comprises one Master and one Slave only. Therefore, the device should always be selected and there is no reason that the Master uses the $\overline{SS}$ pin to select the communicating Slave device.

Note:
1. Clearing SSDIS control bit does not clear MODF.
2. Special care should be taken when setting SSDIS control bit when CPHA = ’0’ because in this mode the $\overline{SS}$ is used to start the transmission on some devices. This requirement does not apply to the AT89LP51RB2/RC2/IC2 itself.

The In-System Programming (ISP) interface also uses the SPI pins. Although the ISP protocol is SPI-based, the $\overline{SS}$ pin has special meaning and must be driven by the master as a frame delimiter. $\overline{SS}$ cannot be tied to ground for ISP to function correctly.

When the SPI is configured as a Master (MSTR in SPCON is set), the operation of the $\overline{SS}$ pin depends on the setting of the Slave Select Disable bit, SSDIS. If SSDIS = 1, the $\overline{SS}$ pin is a general purpose output pin which does not affect the SPI system. Typically, the pin will be driving the $\overline{SS}$ pin of an SPI Slave. If SSDIS = 0, $\overline{SS}$ must be held high to ensure Master SPI operation.

If the $\overline{SS}$ pin is driven low by peripheral circuitry when the SPI is configured as a Master with SSIG = 0, the SPI system interprets this as another master selecting the SPI as a slave and starting to send data to it. To avoid bus contention, the SPI system takes the following actions:

1. The MSTR bit in SPCON is cleared and the SPI system becomes a Slave. As a result of the SPI becoming a Slave, the MOSI and SCK pins become inputs.
2. The MODF Flag in SPSTA is set, and if the SPI interrupt is enabled, the interrupt routine will be executed.

Thus, when interrupt-driven SPI transmission is used in Master mode, and there exists a possibility that $\overline{SS}$ may be driven low, the interrupt should always check that the MSTR bit is still set. If the MSTR bit has been cleared by a slave select, it must be set by the user to re-enable SPI Master mode.

18.1.5 Pin Configuration

When the SPI is enabled (SPEN = 1), the data direction of the MOSI, MISO and SCK pins is automatically overridden according to the MSTR bit as shown in Table 18-2. The user need not reconfigure the pins when switching from master to slave or vice-versa. For more details on port configuration, refer to "Port Configuration" on page 69.

Table 18-2. SPI Pin Configuration and Behavior when SPE = 1

Pin	Mode	Master (MSTR = 1)	Slave (MSTR = 0)
SCK	Quasi-bidirectional	Output	Input (Internal Pull-up)
	Push-Pull Output	Output	Input (Tristate)
	Input-Only	No output (Tristated)	Input (Tristate)
	Open-Drain Output	Output	Input (External Pull-up)
MOSI	Quasi-bidirectional	Output[1]	Input (Internal Pull-up)
	Push-Pull Output	Output[2]	Input (Tristate)
	Input-Only	No output (Tristated)	Input (Tristate)
	Open-Drain Output	Output[1]	Input (External Pull-up)
MISO	Quasi-bidirectional	Input (Internal Pull-up)	Output ($\overline{SS}$ = 0) Internal Pull-up ($\overline{SS}$ = 1)
	Push-Pull Output	Input (Tristate)	Output ($\overline{SS}$ = 0) Tristated ($\overline{SS}$ = 1)
	Input-Only	Input (Tristate)	No output (Tristated)
	Open-Drain Output	Input (External Pull-up)	Output ($\overline{SS}$ = 0) External Pull-up ($\overline{SS}$ = 1)

Notes: 1. In these modes MOSI is active only during transfers. MOSI will be pulled high between transfers to allow other masters to control the line.

2. In Push-Pull mode MOSI is active only during transfers, otherwise it is tristated to prevent line contention. A weak external pull-up may be required to prevent MOSI from floating.

18.2 Master Operation

An SPI master device initiates all data transfers on the SPI bus. The AT89LP51RB2/RC2/IC2 is configured for master operation by setting MSTR = 1 in SPCON. Writing to the SPI data register (SPDAT) while in master mode loads the transmit buffer. If the SPI shift register is empty, the byte in the transmit buffer is moved to the shift register; the transmit buffer empty flag, TXE, is set; and a transmission begins. The transfer may start after an initial delay, while the clock generator waits for the next full bit slot of the specified baud rate. The master shifts the data out serially on the MOSI line while providing the serial shift clock on SCK. When the transfer finishes, the SPIF flag is set to “1” and an interrupt request is generated, if enabled. The data received from the addressed SPI slave device is also transferred from the shift register to the receive buffer. Therefore, the SPIF bit flags both the transmit-complete and receive-data-ready conditions. The received data is accessed by reading SPDAT.

While the TXE flag is set, the transmit buffer is empty. TXE can be cleared by software or by writing to SPDAT. Writing to SPDAT will clear TXE and load the transmit buffer. The user may load the buffer while the shift register is busy, i.e. before the current transfer completes. When the current transfer completes, the queued byte in the transmit buffer is moved to the shift register and the next transfer commences. TXE will generate an interrupt if the SPI interrupt is enabled and if the ENH bit in SPSTA is set. For multi-byte transfers, TXE may be used to remove any dead time between byte transmissions.

The SPI master can operate in two modes: multi-master mode and single-master mode. By default, multi-master mode is active when SSIG = 0. In this mode, the $\overline{SS}$ input is used to disable a master device when another master is accessing the bus. When $\overline{SS}$ is driven low, the master device becomes a slave by clearing its MSTR bit and a Mode Fault is generated by setting the MODF bit in SPSTA. MODF will generate an interrupt if enabled. The MSTR bit must be set in software before the device may become a master again. Single-master mode is enabled by setting SSIG = 1. In this mode $\overline{SS}$ is ignored and the master is always active. $\overline{SS}$ may be used as a general purpose I/O in this mode.

18.3 Slave Operation

When the AT89LP51RB2/RC2/IC2 is not configured for master operation, MSTR = 0, it will operate as an SPI slave. In slave mode, bytes are shifted in through MOSI and out through MISO by a master device controlling the serial clock on SCK. When a byte has been transferred, the SPIF flag is set to “1” and an interrupt request is generated, if enabled. The data received from the addressed master device is also transferred from the shift register to the receive buffer. The received data is accessed by reading SPDAT. A slave device cannot initiate transfers. Data to be transferred to the master device must be preloaded by writing to SPDAT. Writes to SPDAT are double-buffered. The transmit buffer is loaded first and if the shift register is empty, the contents of the buffer will be transferred to the shift register.

While the TXE flag is set, the transmit buffer is empty. TXE can be cleared by software or by writing to SPDAT. Writing to SPDAT will clear TXE and load the transmit buffer. The user may load the buffer while the shift register is busy, i.e. before the current transfer completes. When the current transfer completes, the queued byte in the transmit buffer is moved to the shift register and waits for the master to initiate another transfer. TXE will generate an interrupt if the SPI interrupt is enabled and if the ENH bit in SPSTA is set.

The SPI slave can operate in two modes: 4-wire mode and 3-wire mode. By default, 4-wire mode is active when SSIG = 0. In this mode, the $\overline{SS}$ input is used to enable/disable the slave device when addressed by a master. When $\overline{SS}$ is driven low, the slave device is enabled and will

shift out data on MISO in response to the serial clock on SCK. While $\overline{SS}$ is high, the SPI slave will remain sleeping with MISO inactive. Three-wire mode is enabled by setting SSIG = 1. In this mode $\overline{SS}$ is ignored and the slave is always active. $\overline{SS}$ may be used as a general purpose I/O in this mode.

The Disable Slave Output bit, DISSO in SPSTA, may be used to disable the MISO line of a slave device. DISSO can allow several slave devices to share MISO while operating in 3-wire mode. In this case some protocol other than $\overline{SS}$ may be used to determine which slave is enabled.

18.4 Error Conditions

The following flags in the SPSTA signal SPI error conditions:

18.4.1 Mode Fault (MODF)

Mode Fault error in Master mode SPI indicates that the level on the Slave Select ($\overline{SS}$) pin is inconsistent with the actual mode of the device. MODF is set to warn that there may be a multi-master conflict for system control. In this case, the SPI system is affected in the following ways:

- An SPI receiver/error CPU interrupt request is generated
- The SPEN bit in SPCON is cleared. This disables the SPI
- The MSTR bit in SPCON is cleared

When $\overline{SS}$ Disable (SSDIS) bit in the SPCON register is cleared, the MODF flag is set when the $\overline{SS}$ signal becomes ’0’.

However, as stated before, for a system with one Master, if the $\overline{SS}$ pin of the Master device is pulled low, there is no way that another Master attempts to drive the network. In this case, to prevent the MODF flag from being set, software can set the SSDIS bit in the SPCON register and therefore making the $\overline{SS}$ pin as a general-purpose I/O pin.

Clearing the MODF bit is accomplished by a read of SPSTA register with MODF bit set, followed by a write to the SPCON register. SPEN Control bit may be restored to its original set state after the MODF bit has been cleared.

18.4.2 Write Collision (WCOL)

A Write Collision (WCOL) flag in the SPSTA is set when a write to the SPDAT register is done during a transmit sequence.

WCOL does not cause an interruption, and the transfer continues uninterrupted.

Clearing the WCOL bit is done through a software sequence of an access to SPSTA and an access to SPDAT.

18.4.3 Overrun Condition

An overrun condition occurs when the Master device tries to send several data Bytes and the Slave devise has not cleared the SPIF bit issuing from the previous data Byte transmitted. In this case, the receiver buffer contains the Byte sent after the SPIF bit was last cleared. A read of the SPDAT returns this Byte. All others Bytes are lost.

This condition is not detected by the SPI peripheral.

18.4.4 SS Error Flag (SSERR)

A Synchronous Serial Slave Error occurs when $\overline{SS}$ goes high before the end of a received data in slave mode. SSERR does not cause in interruption, this bit is cleared by writing 0 to SPEN bit (reset of the SPI state machine).

18.5 Serial Clock Timing

The CPHA, CPOL and SPR bits in SPCON control the shape and rate of SCK. The two SPR bits provide four possible clock rates when the SPI is in master mode. In slave mode, the SPI will operate at the rate of the incoming SCK as long as it does not exceed the maximum bit rate. There are also four possible combinations of SCK phase and polarity with respect to the serial data. CPHA and CPOL determine which format is used for transmission. The SPI data transfer formats are shown in Figures 18-3 and 18-4. To prevent glitches on SCK from disrupting the interface, CPHA, CPOL, and SPR should not be modified while the interface is enabled, and the master device should be enabled before the slave device(s).

Figure 18-3. SPI Transfer Format with CPHA = 0

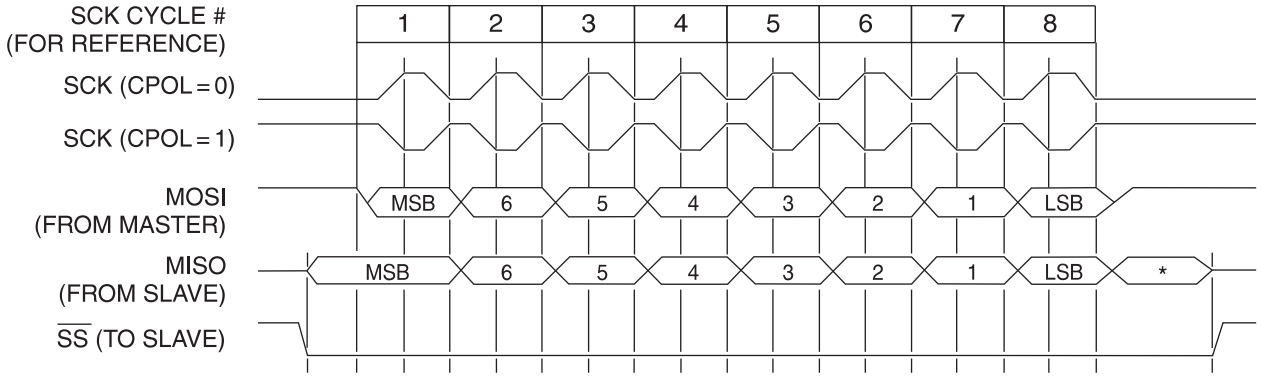

Note: *Not defined but normally MSB of character just received.

Figure 18-4. SPI Transfer Format with CPHA = 1

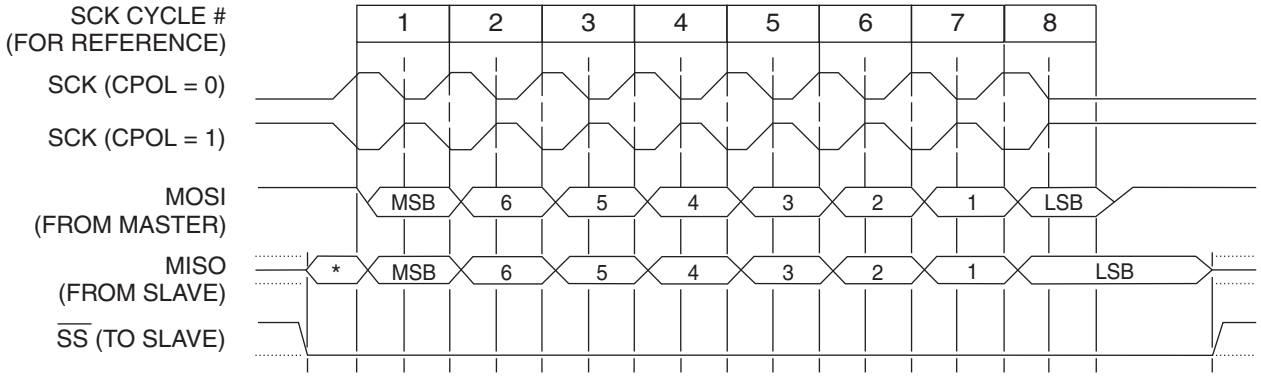

Note: *Not defined but normally LSB of previously transmitted character.

18.6 Registers

Table 18-3. SPCON – SPI Control Register

SPCON Address = C3H — Reset Value = 0001 0100B

Not Bit Addressable

	SPR2	SPEN	SSDIS	MSTR	CPOL	CPHA	SPR1	SPR0
Bit	7	6	5	4	3	2	1	0

Symbol	Function
SPR2	**Serial Peripheral Clock Rate 2** See the description for SPR_{1-0}
SPEN	**Serial peripheral Enable** SPI = 1 enables the SPI channel and connects $\overline{SS}$, MOSI, MISO and SCK to pins P1.4, P1.5, P1.6, and P1.7. SPI = 0 disables the SPI channel.
SSDIS	**Slave Select Disable** If SSDIS = 0, the SPI will only operate in slave mode if $\overline{SS}$ (P1.4) is pulled low. When SSDIS = 1, the SPI ignores $\overline{SS}$ in slave mode and is active whenever SPE (SPCON.6) is set. When MSTR = 1 and SSDIS = 0, $\overline{SS}$ is monitored for master mode collisions. Setting SSDIS = 1 will ignore collisions on $\overline{SS}$. P1.4 may be used as a regular I/O pin when SSIG = 1.
MSTR	**Master/Slave Select** MSTR = 1 selects Master SPI mode. MSTR = 0 selects slave SPI mode.
CPOL	**Clock Polarity** When CPOL = 1, SCK is high when idle. When CPOL = 0, SCK of the master device is low when not transmitting. Please refer to figure on SPI clock phase and polarity control.
CPHA	**Clock Phase** The CPHA bit together with the CPOL bit controls the clock and data relationship between master and slave. Please refer to figure on SPI clock phase and polarity control.
SPR1 SPR0	**Serial Peripheral Clock Rate** These two bits control the SCK rate of the device configured as master. SPR1 and SPR0 have no effect on the slave. The relationship between SCK and the oscillator frequency, $F_{OSC.}$, is as follows: SPR2 SPR1 SPR0 SCK (TSCK = 0) 0 0 0 $f_{PERIPH}/2$ 0 0 1 $f_{PERIPH}/4$ 0 1 0 $f_{PERIPH}/8$ 0 1 1 $f_{PERIPH}/16$ 1 0 0 $f_{PERIPH}/32$ 1 0 1 $f_{PERIPH}/64$ 1 1 0 $f_{PERIPH}/128$ 1 1 1 Timer 1 Overflow/2

Notes:
1. Set up the clock mode before enabling the SPI: set all bits needed in SPCON except the SPEN bit, then set SPEN.
2. Enable the master SPI prior to the slave device.
3. Slave echoes master on the next Tx if not loaded with new data.

Table 18-4. SPDAT – SPI Data Register

SPDAT Address = C5H — Reset Value = 0000 0000

Not Bit Addressable

	SPD7	SPD6	SPD5	SPD4	SPD3	SPD2	SPD1	SPD0
Bit	7	6	5	4	3	2	1	0

Table 18-5. SPSTA – SPI Status Register

SPSTA Address = C4H — Reset Value = 0000 0000B

Not Bit Addressable

	SPIF	WCOL	SSERR	MODF	TXE	DORD	REMAP	TBIE
Bit	7	6	5	4	3	2	1	0

Symbol	Function
SPIF	**SPI Transfer Complete Interrupt Flag** When a serial transfer is complete, the SPIF bit is set by hardware and an interrupt is generated if ESP = 1. The SPIF bit may be cleared by software or by reading the SPI status register followed by reading/writing the SPI data register.
WCOL	**Write Collision Flag** The WCOL bit is set by hardware if SPDAT is written while the transmit buffer is full. The ongoing transfer is not affected. WCOL may be cleared by software or by reading the SPI status register followed by reading/writing the SPI data register.
SSERR	**$\overline{SS}$ Slave Error Flag** Set by hardware when $\overline{SS}$ is deasserted before the end of a received data byte.
MODF	**Mode Fault Flag** MODF is set by hardware when a master mode collision is detected (MSTR = 1, SSIG = 0 and $\overline{SS}$ = 0) and an interrupt is generated if ESP = 1. MODF must be cleared by software.
TXE	**Transmit Buffer Empty Flag** Set by hardware when the transmit buffer is loaded into the shift register, allowing a new byte to be loaded. TXE must be cleared by software. When ENH = 1 and ESP = 1, TXE will generate an interrupt.
DORD	**Data order** DORD = 1 selects LSB first data transmission. DORD = 0 selects MSB first data transmission.
REMAP	**Remap SPI Pins** When cleared the SPI pins are in the default locations on Port 1 that are compatible with AT89C51RB2/RC2/IC2. When set the pins are shuffled on Port 1 to match the AT89S8253 or AT89LP6440 devices. See Table 18-1.
TBIE	**TX Buffer Interrupt Enable** When TBIE = 1, TXE will generate an SPI interrupt if ESP = 1. When TBIE = 0, TXE does not generate an interrupt.

19. Two-Wire Serial Interface

The Two-Wire Interface (TWI) is a bi-directional 2-wire serial communication standard. It is designed primarily for simple but efficient integrated circuit (IC) control. The system is comprised of two lines, SCL (Serial Clock) and SDA (Serial Data) that carry information between the ICs connected to them. The only external hardware needed to implement the bus is a single pull-up resistor for each of the TWI bus lines. All devices connected to the bus have individual addresses, and mechanisms for resolving bus contention are inherent in the TWI protocol. The serial data transfer is limited to 400Kbit/s in standard mode. Various communication configurations can be designed using this bus. Figure 19-1 shows a typical 2-wire bus configuration. Any of the devices connected to the bus can be master or slave.

The Two-Wire Interface on the AT89LP51RB2/RC2/IC2 provides the following features:

- Simple Yet Powerful and Flexible Communication Interface, only two Bus Lines Needed
- Both Master and Slave Operation Supported
- Device can Operate as Transmitter or Receiver
- 7-bit Address Space Allows up to 128 Different Slave Addresses
- Multi-master Arbitration Support
- Up to 400 kHz Data Transfer Speed
- Fully Programmable Slave Address with General Call Support

Note: The TWI is available on both the AT89LP51RB2 and AT89LP51RC2 where as it was not available on the AT89C51RB2 and AT89C51RC2. The TWI is not available in the PDIP package.

Figure 19-1. Two-Wire Bus Configuration

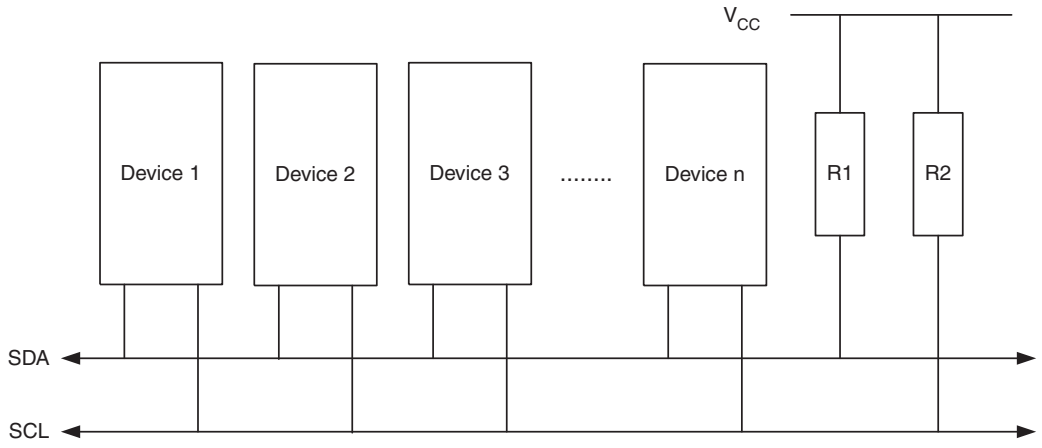

As depicted in Figure 19-1, both bus lines are connected to the positive supply voltage through pull-up resistors. The bus drivers of all TWI-compliant devices are open-drain or open-collector. This implements a wired-AND function which is essential to the operation of the interface. A low level on a TWI bus line is generated when one or more TWI devices output a zero. A high level is output when all TWI devices tristate their outputs, allowing the pull-up resistors to pull the line high. Note that all AT89LP devices connected to the TWI bus must be powered in order to allow any bus operation. The number of devices that can be connected to the bus is only limited by the bus capacitance limit of 400 pF and the 7-bit slave address space.

19.1 Data Transfer and Frame Format

19.1.1 Transferring Bits

Each data bit transferred on the TWI bus is accompanied by a pulse on the clock line. The level of the data line must be stable when the clock line is high. The only exception to this rule is for generating start and stop conditions.

Figure 19-2. Data Validity

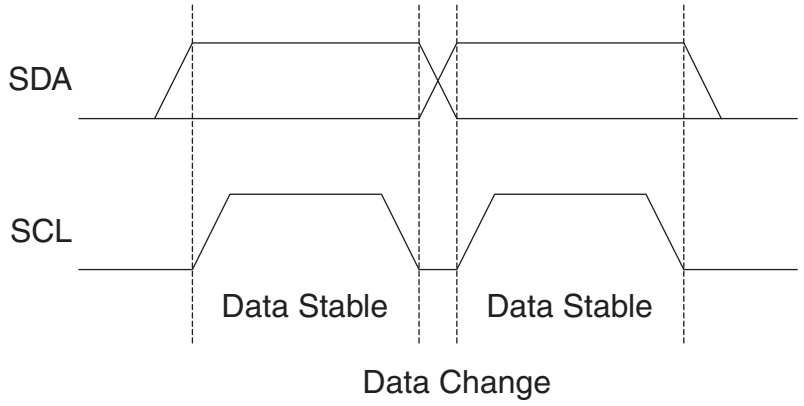

19.1.2 START and STOP Conditions

The Master initiates and terminates a data transmission. The transmission is initiated when the Master issues a START condition on the bus, and it is terminated when the Master issues a STOP condition. Between a START and a STOP condition, the bus is considered busy, and no other Master should try to seize control of the bus. A special case occurs when a new START condition is issued between a START and STOP condition. This is referred to as a REPEATED START condition, and is used when the Master wishes to initiate a new transfer without relinquishing control of the bus. After a REPEATED START, the bus is considered busy until the next STOP. This is identical to the START behavior, and therefore START is used to describe both START and REPEATED START for the remainder of this data sheet, unless otherwise noted. As depicted below, START and STOP conditions are signalled by changing the level of the SDA line when the SCL line is high.

Figure 19-3. START, REPEATED START, and STOP Conditions

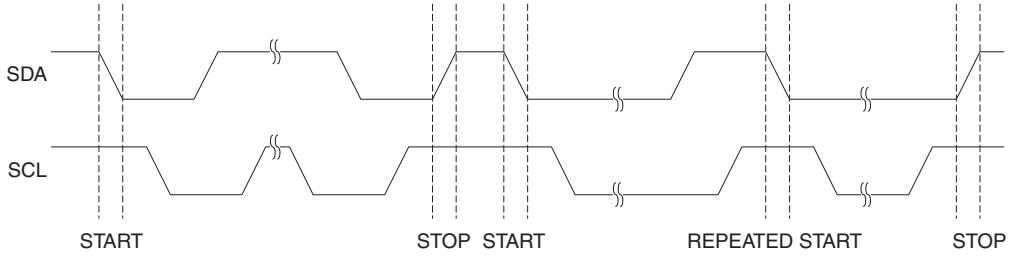

19.1.3 Address Packet Format

All address packets transmitted on the TWI bus are nine bits long, consisting of seven address bits, one READ/$\overline{\text{WRITE}}$ control bit and an acknowledge bit. If the READ/$\overline{\text{WRITE}}$ bit is set, a read operation is to be performed, otherwise a write operation should be performed. When a slave recognizes that it is being addressed, it should acknowledge by pulling SDA low in the ninth SCL (ACK) cycle. If the addressed Slave is busy, or for some other reason can not service the Mas-

ter's request, the SDA line should be left high in the ACK clock cycle. The Master can then transmit a STOP condition, or a REPEATED START condition to initiate a new transmission. An address packet consisting of a slave address and a READ or a $\overline{\text{WRITE}}$ bit is called SLA+R or SLA+W, respectively.

The MSB of the address byte is transmitted first. Slave addresses can freely be allocated by the designer, but the address 0000 000 is reserved for a general call.

When a general call is issued, all slaves should respond by pulling the SDA line low in the ACK cycle. A general call is used when a Master wishes to transmit the same message to several slaves in the system. When the general call address followed by a write bit is transmitted on the bus, all slaves set up to acknowledge the general call will pull the SDA line low in the ACK cycle. The following data packets will then be received by all the slaves that acknowledged the general call. Note that transmitting the general call address followed by a Read bit is meaningless, as this would cause contention if several slaves started transmitting different data.

All addresses of the format 1111 xxx should be reserved for future purposes.

Figure 19-4. Address Packet Format

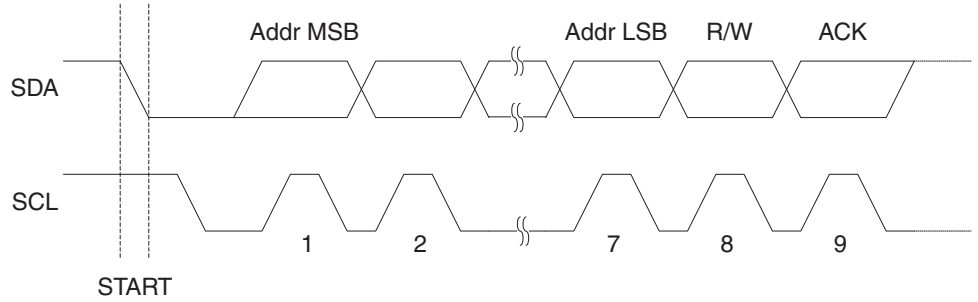

19.1.4 Data Packet Format

All data packets transmitted on the TWI bus are nine bits long, consisting of one data byte and an acknowledge bit. During a data transfer, the Master generates the clock and the START and STOP conditions, while the Receiver is responsible for acknowledging the reception. An Acknowledge (ACK) is signalled by the Receiver pulling the SDA line low during the ninth SCL cycle. If the Receiver leaves the SDA line high, a NACK is signalled. When the Receiver has received the last byte, or for some reason cannot receive any more bytes, it should inform the Transmitter by sending a NACK after the final byte. The MSB of the data byte is transmitted first.

Figure 19-5. Data Packet Format

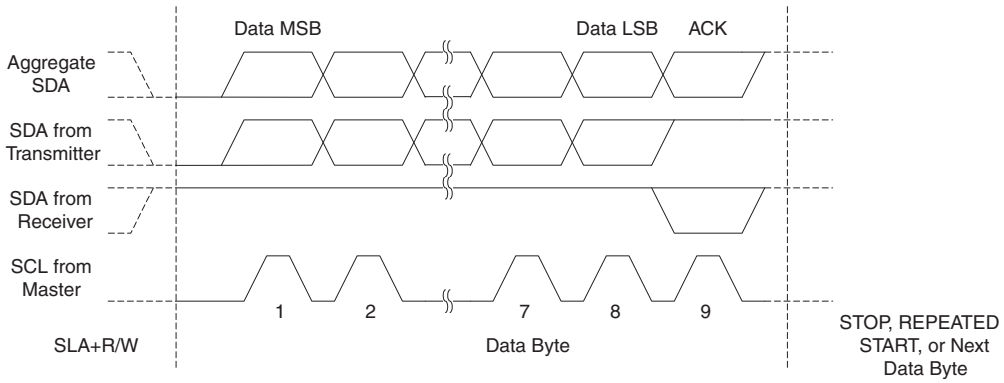

19.1.5 Combining Address and Data Packets Into a Transmission

A transmission basically consists of a START condition, a SLA+R/W, one or more data packets and a STOP condition. An empty message, consisting of a START followed by a STOP condition, is illegal. Note that the wired-ANDing of the SCL line can be used to implement handshaking between the Master and the Slave. The Slave can extend the SCL low period by pulling the SCL line low. This is useful if the clock speed set up by the Master is too fast for the Slave, or the Slave needs extra time for processing between the data transmissions. The Slave extending the SCL low period will not affect the SCL high period, which is determined by the Master. As a consequence, the Slave can reduce the TWI data transfer speed by prolonging the SCL duty cycle.

Figure 19-6 shows a typical data transmission. Note that several data bytes can be transmitted between the SLA+R/W and the STOP condition, depending on the software protocol implemented by the application software.

Figure 19-6. Typical Data Transmission

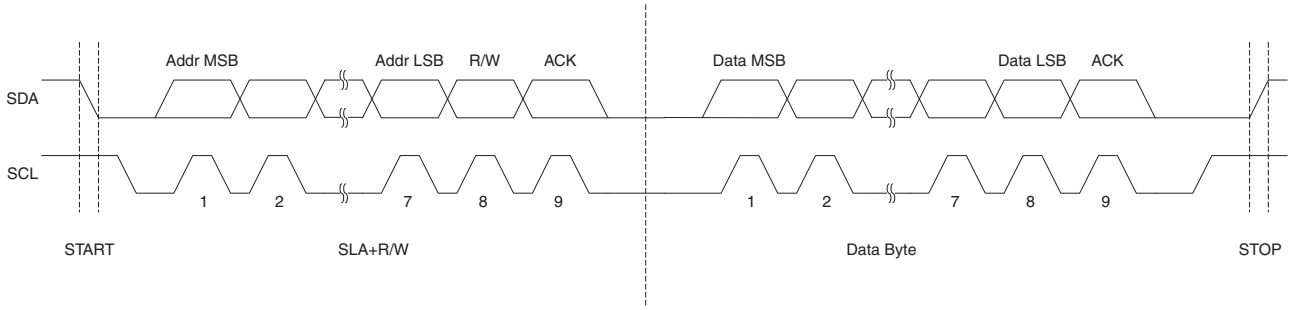

19.2 Multi-master Bus Systems, Arbitration and Synchronization

The TWI protocol allows bus systems with several masters. Special concerns have been taken in order to ensure that transmissions will proceed as normal, even if two or more masters initiate a transmission at the same time. Two problems arise in multi-master systems:

- An algorithm must be implemented allowing only one of the masters to complete the transmission. All other masters should cease transmission when they discover that they have lost the selection process. This selection process is called arbitration. When a contending master discovers that it has lost the arbitration process, it should immediately switch to Slave mode to check whether it is being addressed by the winning master. The fact that multiple masters have started transmission at the same time should not be detectable to the slaves (i.e., the data being transferred on the bus must not be corrupted).
- Different masters may use different SCL frequencies. A scheme must be devised to synchronize the serial clocks from all masters, in order to let the transmission proceed in a lockstep fashion. This will facilitate the arbitration process.

The wired-ANDing of the bus lines is used to solve both these problems. The serial clocks from all masters will be wired-ANDed, yielding a combined clock with a high period equal to the one from the master with the shortest high period. The low period of the combined clock is equal to the low period of the master with the longest low period. Note that all masters listen to the SCL line, effectively starting to count their SCL high and low Time-out periods when the combined SCL line goes high or low, respectively.

Figure 19-7. SCL Synchronization between Multiple Masters

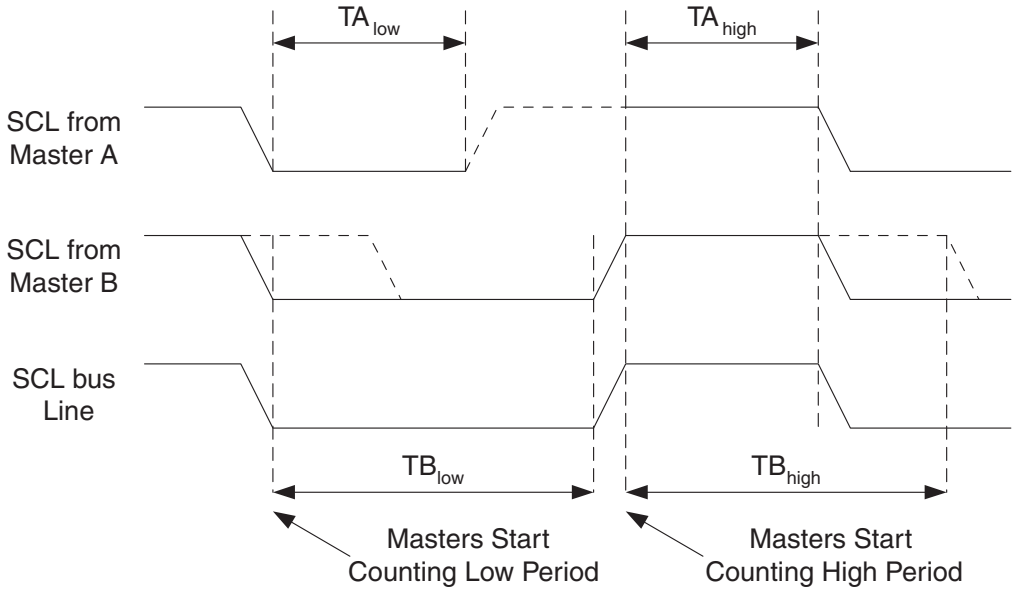

Arbitration is carried out by all masters continuously monitoring the SDA line after outputting data. If the value read from the SDA line does not match the value the master had output, it has lost the arbitration. Note that a master can only lose arbitration when it outputs a high SDA value while another master outputs a low value. The losing master should immediately go to Slave mode, checking if it is being addressed by the winning master. The SDA line should be left high, but losing masters are allowed to generate a clock signal until the end of the current data or address packet. Arbitration will continue until only one master remains, and this may take many bits. If several masters are trying to address the same slave, arbitration will continue into the data packet.

Figure 19-8. Arbitration between Two Masters

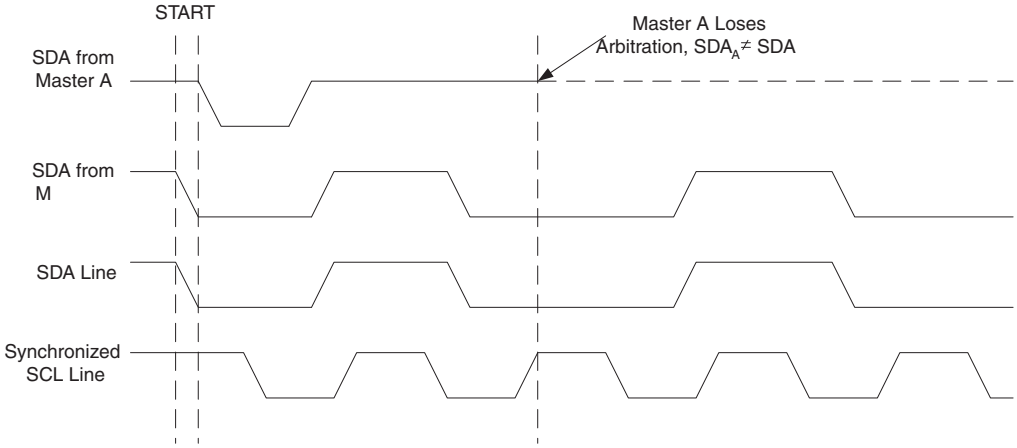

Note that arbitration is not allowed between:

- A REPEATED START condition and a data bit.
- A STOP condition and a data bit.
- A REPEATED START and a STOP condition.

It is the user software's responsibility to ensure that these illegal arbitration conditions never occur. This implies that in multi-master systems, all data transfers must use the same composition of SLA+R/W and data packets. In other words: All transmissions must contain the same number of data packets, otherwise the result of the arbitration is undefined.

19.3 Overview of the TWI Module

The TWI module is comprised of several submodules, as shown in Figure 19-9. All registers drawn in a thick line are accessible through the AT89LP data bus.

Figure 19-9. Overview of the TWI Module

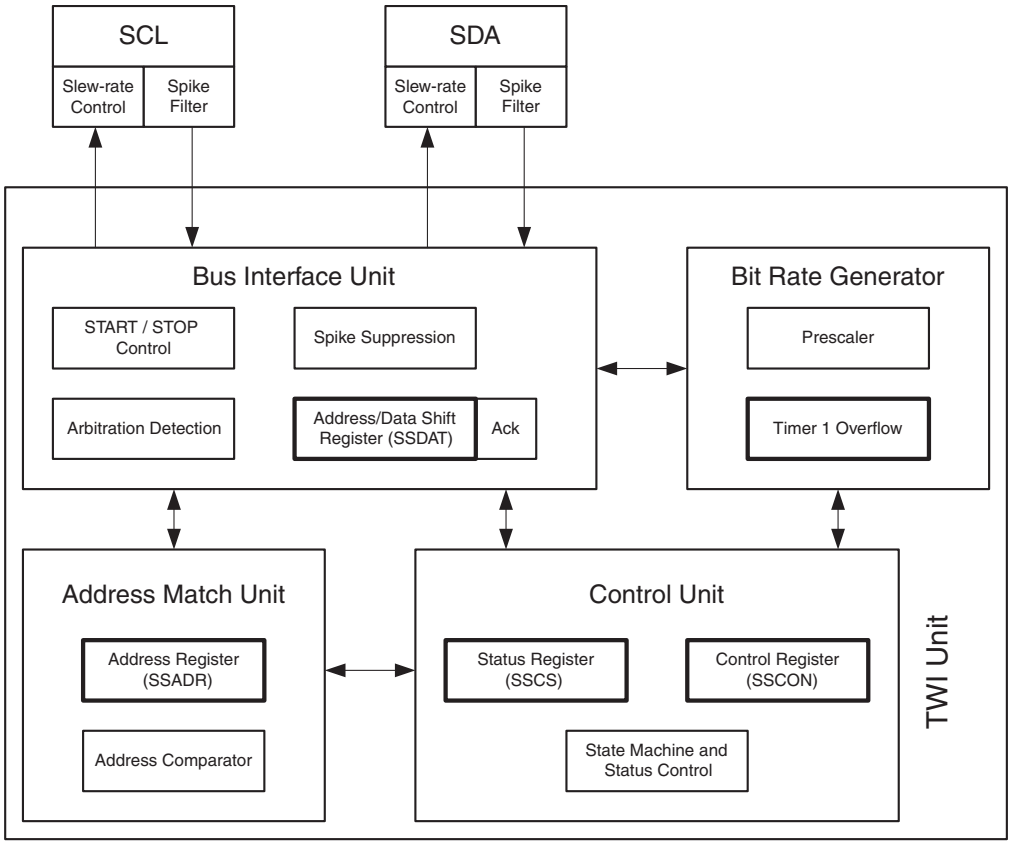

19.3.1 SCL and SDA Pins

These pins interface the TWI with the rest of the MCU system. The output drivers contain a slew-rate limiter in order to conform to the TWI specification. The input stages contain a spike suppression unit removing spikes shorter than 50 ns.

19.3.2 Bit Rate Generator Unit

This unit controls the period of SCL when operating in a Master mode. The SCL period is controlled by settings in the SSCON register. Slave operation does not depend on the Bit Rate setting, but the CPU clock frequency in the slave must be at least 16 times higher than the SCL frequency. Note that slaves may prolong the SCL low period, thereby reducing the average TWI bus clock period. The SCL frequency is generated according to Table 19-1.

Table 19-1. TWI Bit Rate Configuration

CR2	CR1	CR0	FOSCA Division	Bit Rate (kHz)	
				FOSCA = 12 MHz	FOSCA = 16 MHz
0	0	0	256	47	62.5
0	0	1	224	53.5	71.5
0	1	0	192	62.5	83
0	1	1	160	75	100
1	0	0	Unused		
1	0	1	120	100	133.3
1	1	0	60	200	266.6
1	1	1	96 x Timer 1 Overflow	0.5 < baud < 62.5	0.67 < baud < 83

19.3.3 Bus Interface Unit

This unit contains the Data and Address Shift Register (SSDAT), a START/STOP Controller and Arbitration detection hardware. The SSDAT contains the address or data bytes to be transmitted, or the address or data bytes received. In addition to the 8-bit SSDAT, the Bus Interface Unit also contains a register containing the (N)ACK bit to be transmitted or received. This (N)ACK Register is not directly accessible by the application software. However, when receiving, it can be set or cleared by manipulating the TWI Control Register (SSCON). When in Transmitter mode, the value of the received (N)ACK bit can be determined by the value in the SSCS. The START/STOP Controller is responsible for generation and detection of START, REPEATED START, and STOP conditions.

If the TWI has initiated a transmission as Master, the Arbitration Detection hardware continuously monitors the transmission trying to determine if arbitration is in process. If the TWI has lost an arbitration, the Control Unit is informed. Correct action can then be taken and appropriate status codes generated.

19.3.4 Address Match Unit

The Address Match unit checks if received address bytes match the 7-bit address in the TWI Address Register (SSADR). If the TWI General Call Recognition Enable (GC) bit in the SSADR is written to one, all incoming address bits will also be compared against the General Call address. Upon an address match, the Control unit is informed, allowing correct action to be taken. The TWI may or may not acknowledge its address, depending on settings in the SSCON.

19.3.5 Control Unit

The Control unit monitors the TWI bus and generates responses corresponding to settings in the TWI Control Register (SSCON). When an event requiring the attention of the application occurs on the TWI bus, the TWI Interrupt Flag (SI) is asserted. In the next clock cycle, the TWI Status Register (SSCS) is updated with a status code identifying the event. The SSCS only contains relevant status information when the TWI interrupt flag is asserted. At all other times, the SSCS contains a special status code indicating that no relevant status information is available. As long as the SI flag is set, the SCL line is held low. This allows the application software to complete its tasks before allowing the TWI transmission to continue.

The SI flag is set in the following situations:

- After the TWI has transmitted a START/REPEATED START condition.
- After the TWI has transmitted SLA+R/W.
- After the TWI has transmitted an address byte.
- After the TWI has lost arbitration.
- After the TWI has been addressed by own slave address or general call.
- After the TWI has received a data byte.
- After a STOP or REPEATED START has been received while still addressed as a Slave.
- When a bus error has occurred due to an illegal START or STOP condition.

19.4 Register Overview

Table 19-2. SSCON – Two-Wire Control Register

SSCON Address = AAH — Reset Value = X000 00XXB

Not Bit Addressable

	CR2	SSIE	STA	STO	SI	AA	CR1	CR0
Bit	7	6	5	4	3	2	1	0

Symbol	Function
CR2	**Bit Control Rate 2** Sets the bit rate for TWI master mode along with C1 and CR0. See Table 19-1.
SSIE	**Two-wire Serial Interface Enable** Set to enable the TWI. Clear to disable the TWI.
STA	**Start Flag** Set to send a START condition on the bus. Must be cleared by software.
STO	**Stop Flag** Set to send a STOP condition on the bus. Cleared automatically by hardware when the STOP occurs.
SI	**Two-wire Interface Interrupt Flag** Set by hardware when the TWI requests an interrupt. SI must be cleared by software. While SI is set, the SCL low period is stretched. Note that clearing this flag starts the operation of the TWI, so all accesses to the other TWI registers (SSADR, SSCS and SSDAT) must be complete before clearing this flag.
AA	**Assert Acknowledge Flag** Clear in master and slave receiver modes, to force a not acknowledge (high level on SDA). Clear to disable SLA or GCA recognition. Set to recognize SLA or GCA (if GC set) for entering slave receiver or transmitter modes. Set in master and slave receiver modes, to force an acknowledge (low level on SDA). This bit has no effect when in master transmitter mode. By clearing AA to zero, the device can be virtually disconnected from the Two-wire Serial Bus temporarily. Address recognition can then be resumed by setting the AA bit to one again.
CR1	**Bit Control Rate 1** Sets the bit rate for TWI master mode along with C0 and CR2. See Table 19-1.
CR0	**Bit Control Rate 02** Sets the bit rate for TWI master mode along with C1 and CR2. See Table 19-1.

Table 19-3. SSCS – Two-Wire Status Register

SSCS Address = ABH — Reset Value = 1111 1000B

Not Bit Addressable

	SC7	SC6	SC5	SC4	SC3	0	0	0
Bit	7	6	5	4	3	2	1	0

Symbol	Function
SC_{7-0}	**Two-wire Interface Status** The current status code of the TWI logic and serial bus. See Table 19-6 through Table 19-10 for a description of the status codes. Note that the three least significant bits always read as zero. The Status code is valid only while SI remains set.

Table 19-4. SSADR – Two-Wire Address Register

SSADR Address = ACH — Reset Value = 1111 1110B

Not Bit Addressable

	SA6	SA5	SA4	SA3	SA2	SA1	SA0	GC
Bit	7	6	5	4	3	2	1	0

Symbol	Function
SA_{6-0}	**Two-wire Interface Slave Address** The TWI will only respond to slave addresses that match this 7-bit address.
GC	**General Call Enable** Set to enable General Call address (00h) recognition. Clear to disable General Call address recognition.

Table 19-5. SSDAT – Two-Wire Data Register

SSDAT Address = ADH — Reset Value = 1111 1111B

Not Bit Addressable

	SD7	SD6	SD5	SD4	SD3	SD2	SD1	SD0
Bit	7	6	5	4	3	2	1	0

Symbol	Function
SD_{7-0}	**Two-wire Interface Serial Data** Writes to SSDAT queue the next address or data byte for transmission. Reads from SSDAT return the last address or data byte present on the bus. Writes/reads to/from SSDAT must occur only while SI is set. Writes to SSDAT while SI = 0 are ignored. Reads from SSDAT while SI = 0 may return random data.

19.5 Using the TWI

The AT89LP TWI is byte-oriented and interrupt based. Interrupts are issued after all bus events, like reception of a byte or transmission of a START condition. Because the TWI is interrupt-based, the application software is free to carry on other operations during a TWI byte transfer. Note that the TWI Interrupt Enable (ETWI) bit in IE2 together with the Global Interrupt Enable bit in EA allow the application to decide whether or not assertion of the SI flag should generate an

interrupt request. If the TWE bit is cleared, the application must poll the SI flag in order to detect actions on the TWI bus.

When the SI flag is asserted, the TWI has finished an operation and awaits application response. In this case, the TWI Status Register (SSCS) contains a value indicating the current state of the TWI bus. The application software can then decide how the TWI should behave in the next TWI bus cycle by manipulating the SSCON and SSDAT registers.

Figure 19-10 is a simple example of how the application can interface to the TWI hardware. In this example, a Master wishes to transmit a single data byte to a Slave. This description is quite abstract, a more detailed explanation follows later in this section. A simple code example implementing the desired behavior is also presented.

Figure 19-10. Interfacing the Application to the TWI in a Typical Transmission

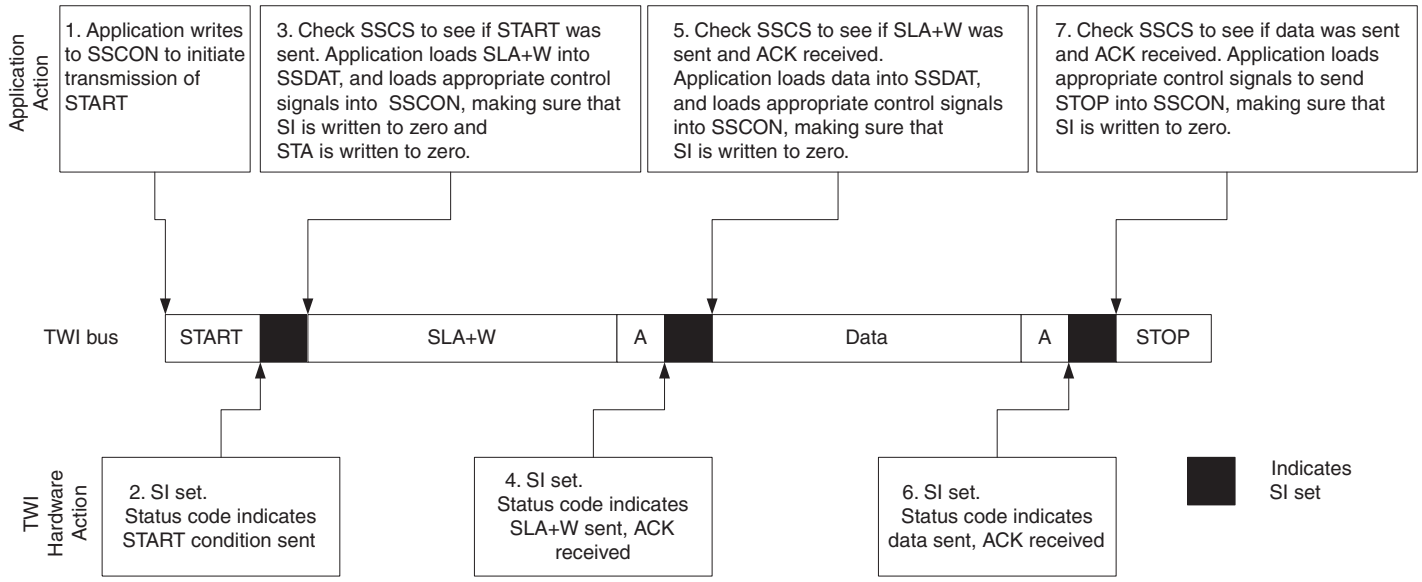

1. The first step in a TWI transmission is to transmit a START condition. This is done by writing a specific value into SSCON, instructing the TWI hardware to transmit a START condition. Which value to write is described later on. However, it is important that the SI bit is cleared in the value written. The TWI will not start any operation as long as the SI bit in SSCON is set. Immediately after the application has cleared SI, the TWI will initiate transmission of the START condition.
2. When the START condition has been transmitted, the SI flag in SSCON is set, and SSCS is updated with a status code indicating that the START condition has successfully been sent.
3. The application software should now examine the value of SSCS, to make sure that the START condition was successfully transmitted. If SSCS indicates otherwise, the application software might take some special action, like calling an error routine. Assuming that the status code is as expected, the application must load SLA+W into SSDAT. Remember that SSDAT is used both for address and data. After SSDAT has been loaded with the desired SLA+W, a specific value must be written to SSCON, instructing the TWI hardware to transmit the SLA+W present in SSDAT. Which value to write is described later on. However, it is important that the SI bit is cleared in the value written. The TWI will not start any operation as long as the SI bit in SSCON is set. Immediately after the application has cleared SI, the TWI will initiate transmission of the address packet.

4. When the address packet has been transmitted, the SI flag in SSCON is set, and SSCS is updated with a status code indicating that the address packet has successfully been sent. The status code will also reflect whether a slave acknowledged the packet or not.
5. The application software should now examine the value of SSCS, to make sure that the address packet was successfully transmitted, and that the value of the ACK bit was as expected. If SSCS indicates otherwise, the application software might take some special action, like calling an error routine. Assuming that the status code is as expected, the application must load a data packet into SSDAT. Subsequently, a specific value must be written to SSCON, instructing the TWI hardware to transmit the data packet present in SSDAT. Which value to write is described later on. However, it is important that the SI bit is cleared in the value written. The TWI will not start any operation as long as the SI bit in SSCON is set. Immediately after the application has cleared SI, the TWI will initiate transmission of the data packet.
6. When the data packet has been transmitted, the SI flag in SSCON is set, and SSCS is updated with a status code indicating that the data packet has successfully been sent. The status code will also reflect whether a slave acknowledged the packet or not.
7. The application software should now examine the value of SSCS, to make sure that the data packet was successfully transmitted, and that the value of the ACK bit was as expected. If SSCS indicates otherwise, the application software might take some special action, like calling an error routine. Assuming that the status code is as expected, the application must write a specific value to SSCON, instructing the TWI hardware to transmit a STOP condition. Which value to write is described later on. However, it is important that the SI bit is cleared in the value written. The TWI will not start any operation as long as the SI bit in SSCON is set. Immediately after the application has cleared SI, the TWI will initiate transmission of the STOP condition. Note that SI is NOT set after a STOP condition has been sent.

Even though this example is simple, it shows the principles involved in all TWI transmissions. These can be summarized as follows:

- When the TWI has finished an operation and expects application response, the SI flag is set. The SCL line is pulled low until SI is cleared.
- When the SI flag is set, the user must update all TWI registers with the value relevant for the next TWI bus cycle. As an example, SSDAT must be loaded with the value to be transmitted in the next bus cycle.
- After all TWI Register updates and other pending application software tasks have been completed, SSCON is written. When writing SSCON, the SI bit should be cleared. The TWI will then commence executing whatever operation was specified by the SSCON setting.

19.6 Transmission Modes

The TWI can operate in one of four major modes. These are named Master Transmitter (MT), Master Receiver (MR), Slave Transmitter (ST) and Slave Receiver (SR). Several of these modes can be used in the same application. As an example, the TWI can use MT mode to write data into a TWI EEPROM, MR mode to read the data back from the EEPROM. If other masters are present in the system, some of these might transmit data to the TWI, and then SR mode would be used. It is the application software that decides which modes are legal.

The following sections describe each of these modes. Possible status codes are described along with figures detailing data transmission in each of the modes. These figures contain the following abbreviations:

S: START condition

Rs: REPEATED START condition

R: Read bit (high level at SDA)

W: Write bit (low level at SDA)

A: Acknowledge bit (low level at SDA)

$\overline{A}$: Not acknowledge bit (high level at SDA)

Data: 8-bit data byte

P: STOP condition

SLA: Slave Address

In Figure 19-11 to Figure 19-14, circles are used to indicate that the SI flag is set. The numbers in the circles show the status code held in SSCS. At these points, actions must be taken by the application to continue or complete the TWI transfer. The TWI transfer is suspended until the SI flag is cleared by software.

When the SI flag is set, the status code in SSCS is used to determine the appropriate software action. For each status code, the required software action and details of the following serial transfer are given in Table 19-6 to Table 19-9.

19.6.1 Master Transmitter Mode

In the Master Transmitter mode, a number of data bytes are transmitted to a Slave Receiver. In order to enter a Master mode, a START condition must be transmitted. The format of the following address packet determines whether Master Transmitter or Master Receiver mode is to be entered. If SLA+W is transmitted, MT mode is entered, if SLA+R is transmitted, MR mode is entered.

A START condition is sent by writing the following value to SSCON:

SSCON	CR2	SSIE	STA	STO	SI	AA	CR1	CR0
Value	bit rate	1	1	0	0	X	bit rate	bit rate

SSIE must be set to enable the Two-wire Serial Interface, STA must be written to one to transmit a START condition and SI must be cleared. The TWI will then test the Two-wire Serial Bus and generate a START condition as soon as the bus becomes free. After a START condition has been transmitted, the SI flag is set by hardware, and the status code in SSCS will be 08h (see Table 19-6). In order to enter MT mode, SLA+W must be transmitted. This is done by writing SLA+W to SSDAT. Thereafter the SI bit should be cleared to continue the transfer.

When SLA+W has been transmitted and an acknowledgment bit has been received, SI is set again and a number of status codes in SSCS are possible. Possible status codes in Master mode are 18h, 20h, or 38h. The appropriate action to be taken for each of these status codes is detailed in Table 19-6.

After SLA+W has been successfully transmitted, a data packet should be transmitted. This is done by writing the data byte to SSDAT. SSDAT must only be written when SI is high. If not, the access will be discarded and the previous value will be transmitted. After updating SSDAT, the SI bit should be cleared to continue the transfer. This scheme is repeated until the last byte has been sent and the transfer is ended by generating a STOP condition or a repeated START condition. A STOP condition is generated by writing the following value to SSCON:

SSCON	CR2	SSIE	STA	STO	SI	AA	CR1	CR0
Value	bit rate	1	0	1	0	X	bit rate	bit rate

A REPEATED START condition is generated by writing the following value to SSCON:

SSCON	CR2	SSIE	STA	STO	SI	AA	CR1	CR0
Value	bit rate	1	1	0	0	X	bit rate	bit rate

After a repeated START condition (status 10h) the Two-wire Serial Interface can access the same slave again, or a new slave without transmitting a STOP condition. Repeated START enables the master to switch between slaves, Master Transmitter mode and Master Receiver mode without losing control of the bus.

Table 19-6. Status Codes for Master Transmitter Mode

Status Code (SSCS)	Status of the Two-wire Serial Bus and Two-wire Serial Interface Hardware	Application Software Response					Next Action Taken by TWI Hardware
		To/from SSDAT	To SSCON				
			STA	STO	SI	AA	
0x08	A START condition has been transmitted	Load SLA+W	0	0	1	X	SLA+W will be transmitted; ACK or NOT ACK will be received
10h	A repeated START condition has been transmitted	Load SLA+W	0	0	1	X	SLA+W will be transmitted; ACK or NOT ACK will be received
		Load SLA+R	0	0	1	X	SLA+R will be transmitted; Logic will switch to Master Receiver mode
18h	SLA+W has been transmitted; ACK has been received	Load data byte	0	0	1	X	Data byte will be transmitted and ACK or NOT ACK will be received
		No action	1	0	1	X	Repeated START will be transmitted
		No action	0	1	1	X	STOP condition will be transmitted and STO flag will be reset
		No action	1	1	1	X	STOP condition followed by a START condition will be transmitted and STO flag will be reset
20h	SLA+W has been transmitted; NOT ACK has been received	Load data byte	0	0	1	X	Data byte will be transmitted and ACK or NOT ACK will be received
		No action	1	0	1	X	Repeated START will be transmitted
		No action	0	1	1	X	STOP condition will be transmitted and STO flag will be reset
		No action	1	1	1	X	STOP condition followed by a START condition will be transmitted and STO flag will be reset
28h	Data byte has been transmitted; ACK has been received	Load data byte	0	0	1	X	Data byte will be transmitted and ACK or NOT ACK will be received
		No action	1	0	1	X	Repeated START will be transmitted
		No action	0	1	1	X	STOP condition will be transmitted and STO flag will be reset
		No action	1	1	1	X	STOP condition followed by a START condition will be transmitted and STO flag will be reset

Table 19-6. Status Codes for Master Transmitter Mode

30h	Data byte has been transmitted; NOT ACK has been received	Load data byte	0	0	1	X	Data byte will be transmitted and ACK or NOT ACK will be received
		No action	1	0	1	X	Repeated START will be transmitted
		No action	0	1	1	X	STOP condition will be transmitted and STO flag will be reset
		No action	1	1	1	X	STOP condition followed by a START condition will be transmitted and STO flag will be reset
38h	Arbitration lost in SLA+W or data bytes	No action	0	0	1	X	Two-wire Serial Bus will be released and not addressed slave mode entered
		No action	1	0	1	X	A START condition will be transmitted when the bus becomes free

19.6.2 Master Receiver Mode

In the Master Receiver mode, a number of data bytes are received from a slave transmitter. In order to enter a Master mode, a START condition must be transmitted. The format of the following address packet determines whether Master Transmitter or Master Receiver mode is to be entered. If SLA+W is transmitted, MT mode is entered, if SLA+R is transmitted, MR mode is entered.

SSIE must be written to one to enable the Two-wire Serial Interface, STA must be written to one to transmit a START condition and SI must be cleared. The TWI will then test the Two-wire Serial Bus and generate a START condition as soon as the bus becomes free. After a START condition has been transmitted, the SI flag is set by hardware, and the status code in SSCS will be 08h (see Table 19-7). In order to enter MR mode, SLA+R must be transmitted. This is done by writing SLA+R to SSDAT. Thereafter the SI bit should be cleared to continue the transfer.

When SLA+R has been transmitted and an acknowledgment bit has been received, SI is set again and a number of status codes in SSCS are possible. Possible status codes in Master mode are 38h, 40h or 48h. The appropriate action to be taken for each of these status codes is detailed in Table 19-7. Received data can be read from the SSDAT Register when the SI flag is set high by hardware. This scheme is repeated until the last byte has been received. After the last byte has been received, the MR should inform the ST by sending a NACK after the last received data byte. The transfer is ended by generating a STOP condition or a repeated START condition.

Figure 19-11. Format and States in Master Transmitter Mode

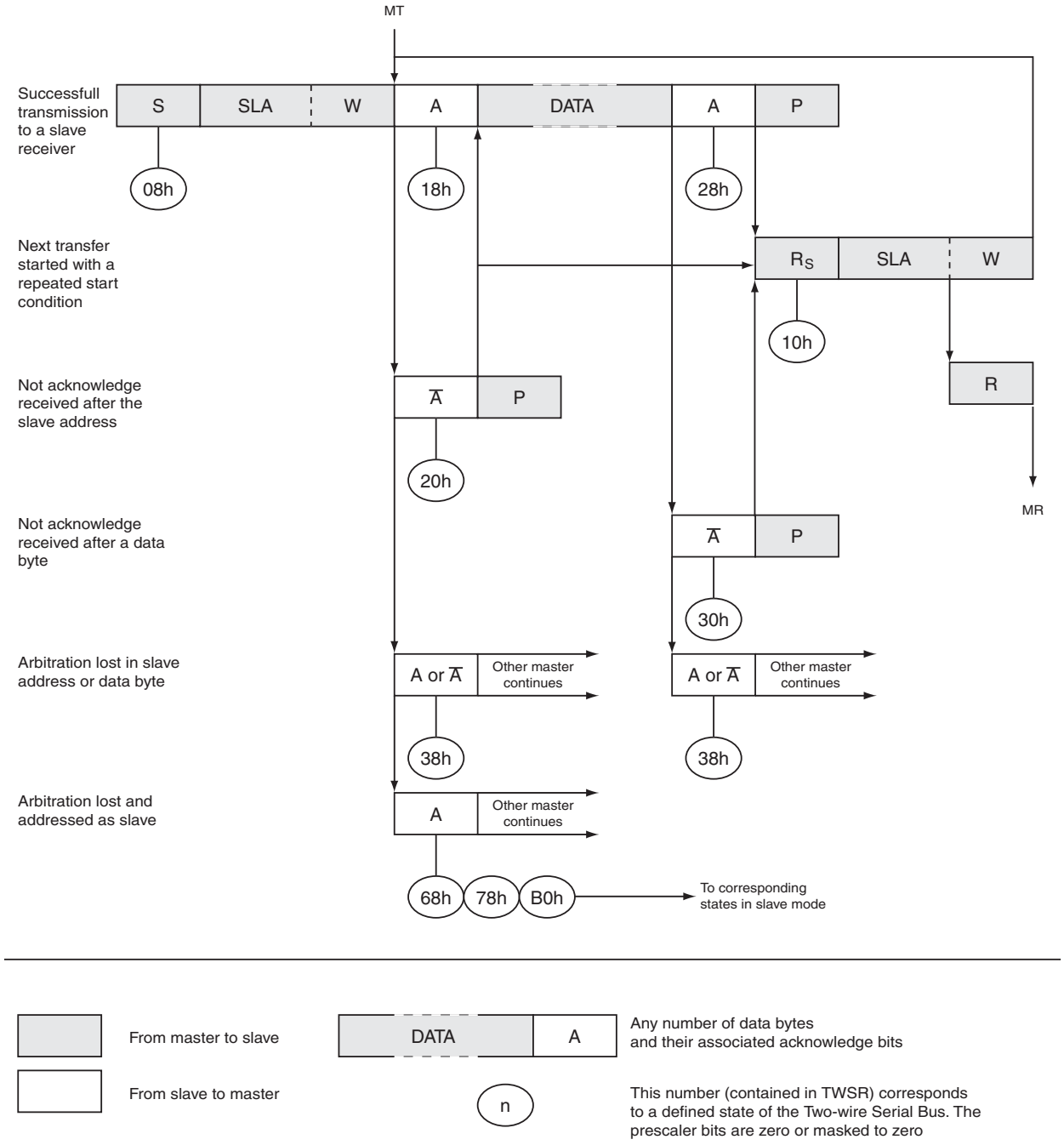

Table 19-7. Status Codes for Master Receiver Mode

Status Code (SSCS)	Status of the Two-wire Serial Bus and Two-wire Serial Interface Hardware	Application Software Response					Next Action Taken by TWI Hardware
		To/from SSDAT	To SSCON				
			STA	STO	SI	AA	
08h	A START condition has been transmitted	Load SLA+R	0	0	1	X	SLA+R will be transmitted; ACK or NOT ACK will be received
10h	A repeated START condition has been transmitted	Load SLA+R	0	0	1	X	SLA+R will be transmitted; ACK or NOT ACK will be received
		Load SLA+W	0	0	1	X	SLA+W will be transmitted; Logic will switch to Master Transmitter mode
38h	Arbitration lost in SLA+R or NOT ACK bit	No action	0	0	1	X	Two-wire Serial Bus will be released and not addressed Slave mode will be entered
		No action	1	0	1	X	A START condition will be transmitted when the bus becomes free
40h	SLA+R has been transmitted; ACK has been received	No action	0	0	1	0	Data byte will be received and NOT ACK will be returned
		No action	0	0	1	1	Data byte will be received and ACK will be returned
48h	SLA+R has been transmitted; NOT ACK has been received	No action	1	0	1	X	Repeated START will be transmitted
		No action	0	1	1	X	STOP condition will be transmitted and STO flag will be reset
		No action	1	1	1	X	STOP condition followed by a START condition will be transmitted and STO flag will be reset
50h	Data byte has been received; ACK has been returned	Read data byte	0	0	1	0	Data byte will be received and NOT ACK will be returned
		Read data byte	0	0	1	1	Data byte will be received and ACK will be returned
58h	Data byte has been received; NOT ACK has been returned	Read data byte	1	0	1	X	Repeated START will be transmitted
		Read data byte	0	1	1	X	STOP condition will be transmitted and STO flag will be reset
		Read data byte	1	1	1	X	STOP condition followed by a START condition will be transmitted and STO flag will be reset

Figure 19-12. Format and States in Master Receiver Mode

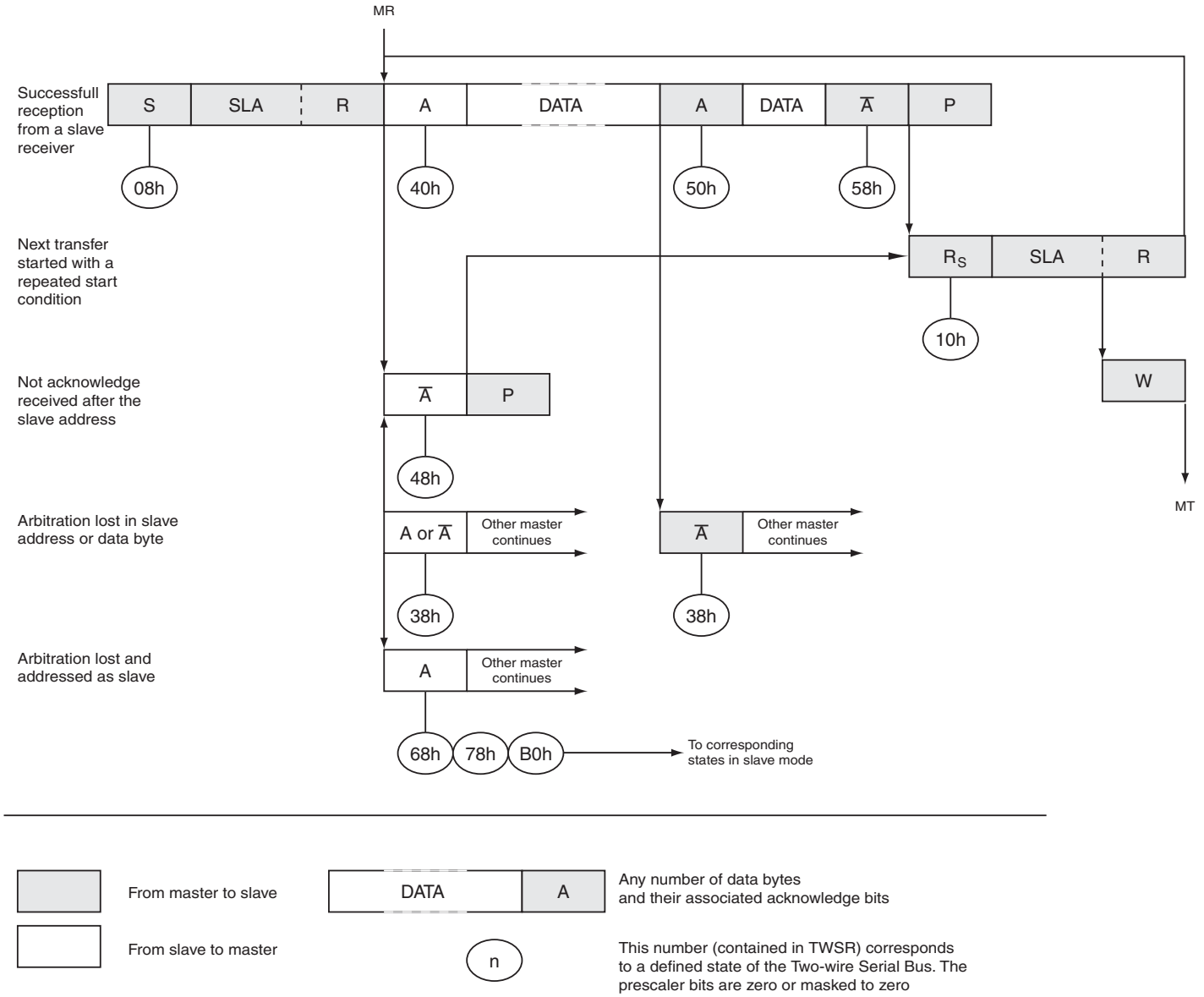

19.6.3 Slave Receiver Mode

In the Slave Receiver mode, a number of data bytes are received from a master transmitter. To initiate the Slave Receiver mode, SSADR and SSCON must be initialized as follows:

SSADR	S6	SA5	SA4	SA3	SA2	SA1	SA0	GC
Value	Device's own Slave Address							X

The upper seven bits are the address to which the Two-wire Serial Interface will respond when addressed by a master. If the LSB is set, the TWI will respond to the general call address (00h), otherwise it will ignore the general call address.:

SSCON	CR2	SSIE	STA	STO	SI	AA	CR1	CR0
Value	X	1	0	0	0	1	X	X

SSIE must be written to one to enable the TWI. The AA bit must be written to one to enable the acknowledgment of the device's own slave address or the general call address. STA and STO must be written to zero.

When SSADR and SSCON have been initialized, the TWI waits until it is addressed by its own slave address (or the general call address if enabled) followed by the data direction bit. If the direction bit is "0" (write), the TWI will operate in SR mode, otherwise ST mode is entered. After its own slave address and the write bit have been received, the SI flag is set and a valid status code can be read from SSCS. The status code is used to determine the appropriate software action. The appropriate action to be taken for each status code is detailed in Table 19-8. The Slave Receiver mode may also be entered if arbitration is lost while the TWI is in the Master mode (see states 68h and 78h).

If the AA bit is reset during a transfer, the TWI will return a "Not Acknowledge" ("1") to SDA after the next received data byte. This can be used to indicate that the slave is not able to receive any more bytes. While AA is zero, the TWI does not acknowledge its own slave address. However, the Two-wire Serial Bus is still monitored and address recognition may resume at any time by setting AA. This implies that the AA bit may be used to temporarily isolate the TWI from the Two-wire Serial Bus.

.

Table 19-8. Status Codes for Slave Receiver Mode

Status Code (SSCS)	Status of the Two-wire Serial Bus and Two-wire Serial Interface Hardware	Application Software Response					Next Action Taken by TWI Hardware
		To/from SSDAT	To SSCON				
			STA	STO	SI	AA	
60h	Own SLA+W has been received; ACK has been returned	No action	X	0	1	0	Data byte will be received and NOT ACK will be returned
		No action	X	0	1	1	Data byte will be received and ACK will be returned
68h	Arbitration lost in SLA+R/W as master; own SLA+W has been received; ACK has been returned	No action	X	0	1	0	Data byte will be received and NOT ACK will be returned
		No action	X	0	1	1	Data byte will be received and ACK will be returned
70h	General call address has been received; ACK has been returned	No action	X	0	1	0	Data byte will be received and NOT ACK will be returned
		No action	X	0	1	1	Data byte will be received and ACK will be returned
78h	Arbitration lost in SLA+R/W as master; General call address has been received; ACK has been returned	No action	X	0	1	0	Data byte will be received and NOT ACK will be returned
		No action	X	0	1	1	Data byte will be received and ACK will be returned
80h	Previously addressed with own SLA+W; data has been received; ACK has been returned	Read data byte	X	0	1	0	Data byte will be received and NOT ACK will be returned
		Read data byte	X	0	1	1	Data byte will be received and ACK will be returned

Table 19-8. Status Codes for Slave Receiver Mode

88h	Previously addressed with own SLA+W; data has been received; NOT ACK has been returned	Read data byte	0	0	1	0	Switched to the not addressed Slave mode; no recognition of own SLA or GCA
		Read data byte	0	0	1	1	Switched to the not addressed Slave mode; own SLA will be recognized; GCA will be recognized if GC = “1”
		Read data byte	1	0	1	0	Switched to the not addressed Slave mode; no recognition of own SLA or GCA; a START condition will be transmitted when the bus becomes free
		Read data byte	1	0	1	1	Switched to the not addressed Slave mode; own SLA will be recognized; GCA will be recognized if GC = “1”; a START condition will be transmitted when the bus becomes free
90h	Previously addressed with general call; data has been received; ACK has been returned	Read data byte	X	0	1	0	Data byte will be received and NOT ACK will be returned
		Read data byte	X	0	1	1	Data byte will be received and ACK will be returned
98h	Previously addressed with general call; data has been received; NOT ACK has been returned	Read data byte	0	0	1	0	Switched to the not addressed Slave mode; no recognition of own SLA or GCA
		Read data byte	0	0	1	1	Switched to the not addressed Slave mode; own SLA will be recognized; GCA will be recognized if GC = “1”
		Read data byte	1	0	1	0	Switched to the not addressed Slave mode; no recognition of own SLA or GCA; a START condition will be transmitted when the bus becomes free
		Read data byte	1	0	1	1	Switched to the not addressed Slave mode; own SLA will be recognized; GCA will be recognized if GC = “1”; a START condition will be transmitted when the bus becomes free
A0h	A STOP condition or repeated START condition has been received while still addressed as slave	No Action	0	0	1	0	Switched to the not addressed Slave mode; no recognition of own SLA or GCA
		No Action	0	0	1	1	Switched to the not addressed Slave mode; own SLA will be recognized; GCA will be recognized if GC = “1”
		No Action	1	0	1	0	Switched to the not addressed Slave mode; no recognition of own SLA or GCA; a START condition will be transmitted when the bus becomes free
		No Action	1	0	1	1	Switched to the not addressed Slave mode; own SLA will be recognized; GCA will be recognized if GC = “1”; a START condition will be transmitted when the bus becomes free

Figure 19-13. Format and States in Slave Receiver Mode

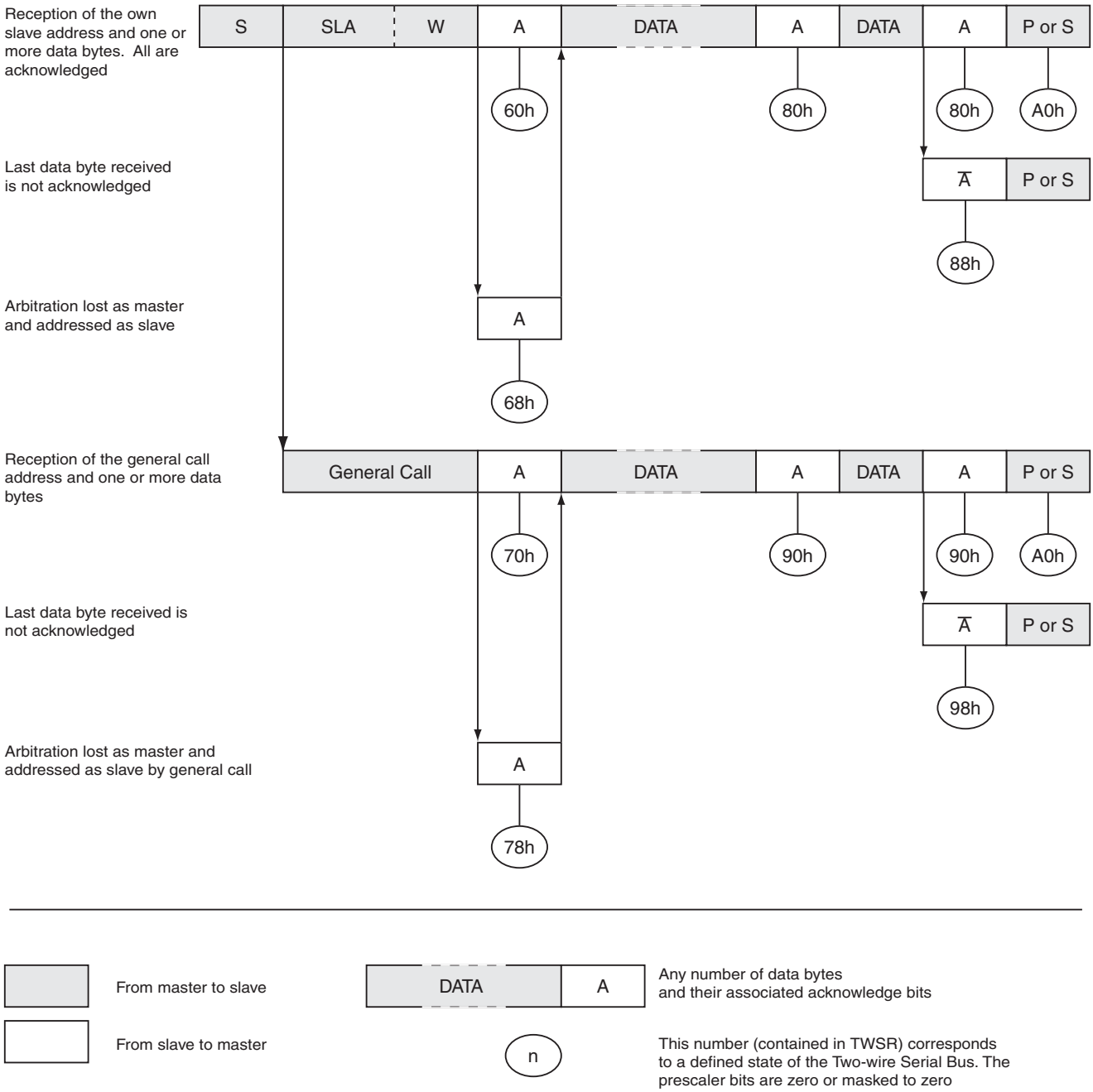

19.6.4 Slave Transmitter Mode

In the Slave Transmitter mode, a number of data bytes are transmitted to a master receiver. To initiate the Slave Transmitter mode, upper 7 bits of SSADR must be initialized with the address to which the Two-wire Serial Interface will respond when addressed by a master. If the LSB is set, the TWI will respond to the general call address (00h), otherwise it will ignore the general call address. SSIE must be written to one to enable the TWI. The AA bit must be written to one to enable the acknowledgment of the device's own slave address or the general call address. STA and STO must be written to zero.

When SSADR and SSCON have been initialized, the TWI waits until it is addressed by its own slave address (or the general call address if enabled) followed by the data direction bit. If the direction bit is "1" (read), the TWI will operate in ST mode, otherwise SR mode is entered. After its own slave address and the write bit have been received, the TWINT flag is set and a valid status code can be read from SSCS. The status code is used to determine the appropriate software action. The appropriate action to be taken for each status code is detailed in Table 19-9. The Slave Transmitter mode may also be entered if arbitration is lost while the TWI is in the Master mode (see state B0h).

If the AA bit is written to zero during a transfer, the TWI will transmit the last byte of the transfer. State C0h or state C8h will be entered, depending on whether the master receiver transmits a NACK or ACK after the final byte. The TWI is switched to the not addressed Slave mode, and will ignore the master if it continues the transfer. Thus the master receiver receives all "1s" as serial data. State C8h is entered if the master demands additional data bytes (by transmitting ACK), even though the slave has transmitted the last byte (AA zero and expecting NACK from the master). While AA is zero, the TWI does not respond to its own slave address. However, the Two-wire Serial Bus is still monitored and address recognition may resume at any time by setting AA. This implies that the AA bit may be used to temporarily isolate the TWI from the Two-wire Serial Bus.

Figure 19-14. Format and States in Slave Transmitter Mode

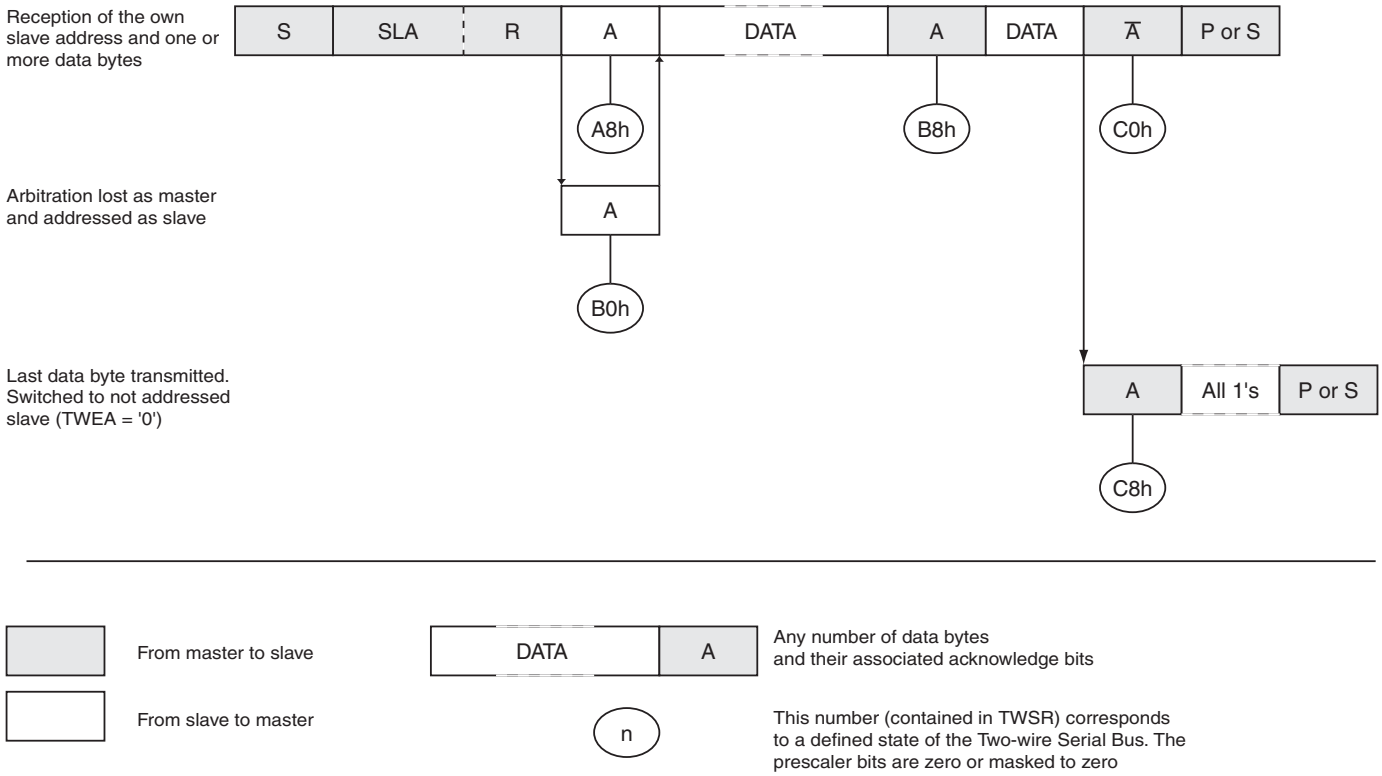

Table 19-9. Status Codes for Slave Transmitter Mode

Status Code (SSCS)	Status of the Two-wire Serial Bus and Two-wire Serial Interface Hardware	Application Software Response					Next Action Taken by TWI Hardware
		To/from SSDAT	To SSCON				
			STA	STO	SI	AA	
A8h	Own SLA+R has been received; ACK has been returned	Load data byte	X	0	1	0	Last data byte will be transmitted and NOT ACK should be received
		Load data byte	X	0	1	1	Data byte will be transmitted and ACK should be received
B0h	Arbitration lost in SLA+R/W as master; own SLA+R has been received; ACK has been returned	Load data byte	X	0	1	0	Last data byte will be transmitted and NOT ACK should be received
		Load data byte	X	0	1	1	Data byte will be transmitted and ACK should be received
B8h	Data byte in SSDAT has been transmitted; ACK has been received	Load data byte	X	0	1	0	Last data byte will be transmitted and NOT ACK should be received
		Load data byte	X	0	1	1	Data byte will be transmitted and ACK should be received
C0h	Data byte in SSDAT has been transmitted; NOT ACK has been received	No action	0	0	1	0	Switched to the not addressed Slave mode; no recognition of own SLA or GCA
		No action	0	0	1	1	Switched to the not addressed Slave mode; own SLA will be recognized; GCA will be recognized if GC = “1”
		No action	1	0	1	0	Switched to the not addressed Slave mode; no recognition of own SLA or GCA; a START condition will be transmitted when the bus becomes free
		No action	1	0	1	1	Switched to the not addressed Slave mode; own SLA will be recognized; GCA will be recognized if GC = “1”; a START condition will be transmitted when the bus becomes free
C8h	Last data byte in SSDAT has been transmitted (AA = “0”); ACK has been received	No action	0	0	1	0	Switched to the not addressed Slave mode; no recognition of own SLA or GCA
		No action	0	0	1	1	Switched to the not addressed Slave mode; own SLA will be recognized; GCA will be recognized if GC = “1”
		No action	1	0	1	0	Switched to the not addressed Slave mode; no recognition of own SLA or GCA; a START condition will be transmitted when the bus becomes free
		No action	1	0	1	1	Switched to the not addressed Slave mode; own SLA will be recognized; GCA will be recognized if GC = “1”; a START condition will be transmitted when the bus becomes free

19.6.5 Miscellaneous States

There are two status codes that do not correspond to a defined TWI state, see Table 19-10.

Status F8h indicates that no relevant information is available because the SI flag is not set. This occurs between other states, and when the TWI is not involved in a serial transfer.

Status 00h indicates that a bus error has occurred during a Two-wire Serial Bus transfer. A bus error occurs when a START or STOP condition occurs at an illegal position in the format frame.

Examples of such illegal positions are during the serial transfer of an address byte, a data byte, or an acknowledge bit. When a bus error occurs, SI is set. To recover from a bus error, the STO flag must set and SI must be cleared. This causes the TWI to enter the not addressed Slave mode and to clear the STO flag (no other bits in SSCON are affected). The SDA and SCL lines are released, and no STOP condition is transmitted.

Table 19-10. Miscellaneous States

Status Code (SSCS)	Status of the Two-wire Serial Bus and Two-wire Serial Interface hardware	Application Software Response					Next Action Taken by TWI Hardware
		To/from SSDAT	To SSCON				
			STA	STO	SI	AA	
F8h	No relevant state information available; SI = “0”	No action	No action				Wait or proceed current transfer
00h	Bus error due to an illegal START or STOP condition	No action	0	1	1	X	Only the internal hardware is affected, no STOP condition is sent on the bus. In all cases, the bus is released and STO is cleared.

19.6.6 Combining Several TWI Modes

In some cases, several TWI modes must be combined in order to complete the desired action. Consider for example reading data from a serial EEPROM. Typically, such a transfer involves the following steps:

1. The transfer must be initiated.
2. The EEPROM must be instructed what location should be read.
3. The reading must be performed.
4. The transfer must be finished.

Note that data is transmitted both from Master to Slave and vice versa. The Master must instruct the Slave what location it wants to read, requiring the use of the MT mode. Subsequently, data must be read from the Slave, implying the use of the MR mode. Thus, the transfer direction must be changed. The Master must keep control of the bus during all these steps, and the steps should be carried out as an atomic operation. If this principle is violated in a multi-master system, another Master can alter the data pointer in the EEPROM between steps 2 and 3, and the Master will read the wrong data location. Such a change in transfer direction is accomplished by transmitting a REPEATED START between the transmission of the address byte and reception of the data. After a REPEATED START, the Master keeps ownership of the bus. The following figure shows the flow in this transfer.

Figure 19-15. Combining Several TWI Modes to Access a Serial EEPROM

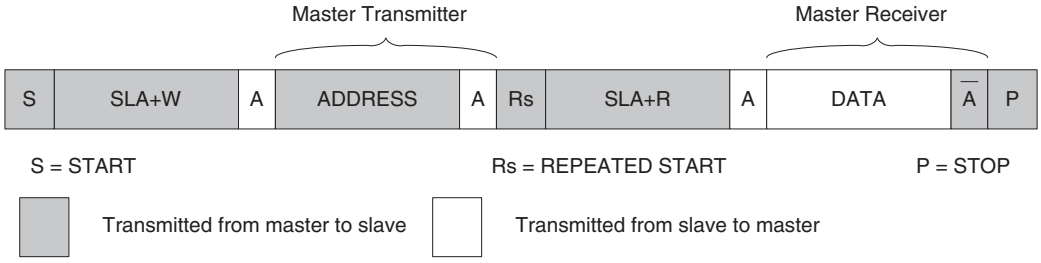

20. Dual Analog Comparators

The AT89LP51RB2/RC2/IC2 provides two analog comparators. The analog comparators have the following features:

- Internal 3-level Voltage Reference (1.125V, 1.25V, 1.375V)
- Four Shared Analog Input Channels
  - Configure as Multiple Input Window Comparator
- Selectable Interrupt Conditions
  - High- or Low-level
  - Rising- or Falling-edge
  - Output Toggle
- Hardware Debouncing Modes

Figure 20-1. Dual Comparator Block Diagram

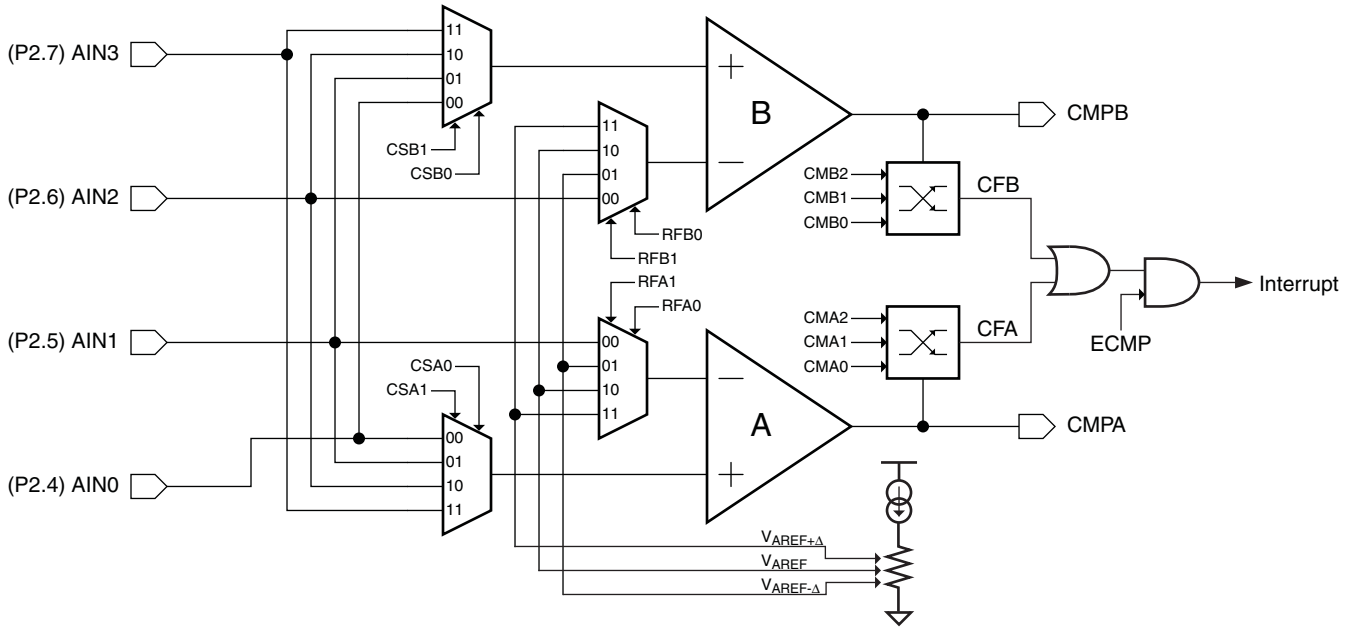

A block diagram of the dual analog comparators with relevant connections is shown in Figure 20-1. Input options allow the comparators to function in a number of different configurations as shown in Figure 20-4. Comparator operation is such that the output is a logic “1” when the positive input is greater than the negative input. Otherwise the output is a zero. Setting the CENA (ACSRA.3) and CENB (ACSRB.3) bits enable Comparator A and B respectively. The user must also set the CONA (ACSRA.5) or CONB (ACSRB.5) bits to connect the comparator inputs before using a comparator. When a comparator is first enabled, the comparator output and interrupt flag are not guaranteed to be stable for 10 µs. The corresponding comparator interrupt should not be enabled during that time, and the comparator interrupt flag must be cleared before the interrupt is enabled in order to prevent an immediate interrupt service.

Before enabling the comparators, the analog inputs should be tristated by putting P2.4, P2.5, P2.6 and P2.7 into input-only mode. See “Port Analog Functions” on page 72. It is not possible to use the Analog Comparators with external program memory or external data memory with 16-bit addresses (MOVX @DPTR) since these functions require the use of Port 2 for addressing.

Each comparator may be configured to cause an interrupt under a variety of output value conditions by setting the CMx_{2-0} bits in ACSR*x* (See Table 20-1 or Table 20-2). The comparator interrupt flags CF*x* in ACSR*x* are set whenever the comparator outputs match the conditions specified by $CMx_{2-0.}$ The flags may be polled by software or may be used to generate an interrupt and must be cleared by software. Both comparators share a common interrupt vector. If both comparators are enabled, the user needs to read the flags after entering the interrupt service routine to determine which comparator caused the interrupt.

The CCS_{1-0} bits in AREF (Table 20-3) control when the comparator interrupts sample the comparator outputs. Normally the outputs are sampled every clock system; however, the outputs may also be sampled whenever Timer 0, Timer 1 or Timer 2 overflows. These settings allow the comparators to be sampled at a specific time or to reduce the number of comparator events seen by the system when using level sensitive modes. The raw value of the comparator outputs can always be read from the CMPA and CMPB bits in AREF.

The comparators will continue to function during Idle mode. If this is not the desired behavior, the comparators should be disabled before entering Idle. The comparators are always disabled during Power-down mode.

20.1 Analog Input Muxes

The positive input terminal of each comparator may be connected to any of the four analog input pins by changing the CSA_{1-0} or CSB_{1-0} bits in ACSRA and ACSRB. When changing the analog input pins, the comparator must be disconnected from its inputs by clearing the CONA or CONB bits. The connection is restored by setting the bits again after the muxes have been modified.

```
CLR  EC            ; Disable comparator interrupts
ANL  ACSRA, #0DFh  ; Clear CONA to disconnect COMP A
...                ; Modify CSA or RFA bits
ORL  ACSRA, #020h  ; Set CONA to connect COMP A
ANL  ACSRA, #0EFh  ; Clear any spurious interrupt
SETB   EC          ; Re-enable comparator interrupts
```

The corresponding comparator interrupt should not be enabled while the inputs are being changed, and the comparator interrupt flag must be cleared before the interrupt is re-enabled in order to prevent an unintentional interrupt request.

The equivalent model for the analog input circuitry is illustrated in Figure 21-2. An analog source applied to AINn is subjected to the pin capacitance and input leakage of that pin, regardless of whether that channel is selected as input to the comparator. When the channel is selected, the source must drive the input capacitance of the comparator through the series resistance (combined resistance in the input path).

Figure 20-2. Equivalent Analog Input Model

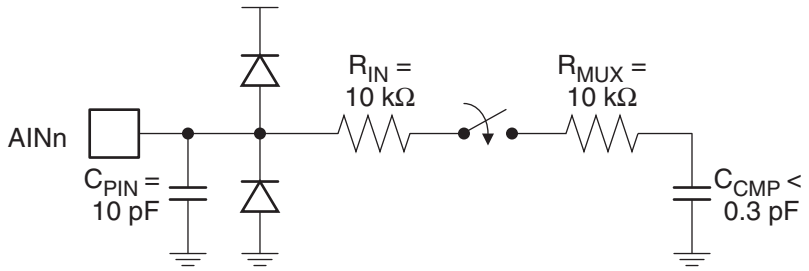

20.2 Internal Reference Voltage

The negative input terminal of each comparator may be connected to an internal voltage reference by changing the RFB_{1-0} or RFA_{1-0} bits in AREF. The internal reference voltage, V_{AREF}, is set to 1.25 V ±5%. The voltage reference also provides two additional voltage levels approximately 125 mV above and below V_{AREF}. These levels may be used to configure the comparators as an internally referenced window comparator with up to four input channels. Changing the reference input must follow the same routine used for changing the positive input as described in "Analog Input Muxes" above.

20.3 Comparator Interrupt Debouncing

The comparator output is normally sampled every clock cycle. The conditions on the analog inputs may be such that the comparator output will toggle excessively. This is especially true if applying slow moving analog inputs. Three debouncing modes are provided to filter out this noise for edge-triggered interrupts. In debouncing mode, the comparator uses Timer 1 to modulate its sampling time when CxC_{1-0} = 00B. When a relevant transition occurs, the comparator waits until two Timer 1 overflows have occurred before resampling the output. If the new sample agrees with the expected value, CF*x* is set. Otherwise, the event is ignored. The filter may be tuned by adjusting the time-out period of Timer 1. Because Timer 1 is free running, the debouncer must wait for two overflows to guarantee that the sampling delay is at least 1 time-out period. Therefore, after the initial edge event, the interrupt may occur between 1 and 2 time-out periods later. See Figure 20-3. When the comparator clock is provided by one of the timer overflows, i.e. CxC_{1-0} != 00B, any change in the comparator output must be valid after 4 samples to be accepted as an edge event.

Figure 20-3. Negative Edge with Debouncing Example

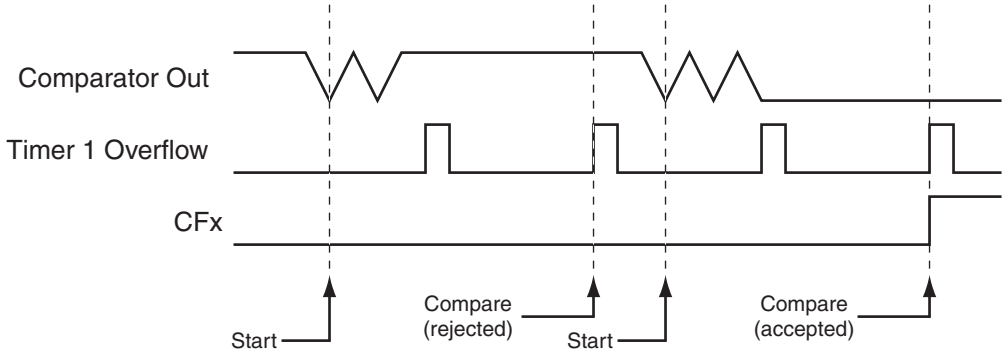

When the comparator sampling clock is configured for a timer overflow, Timer 1 still controls the debouncing. The sampling clock will determine when the edge event occurs and the interrupt will be validated two Timer 1 overflows after this event. When Timer 1 is selected for the sampling clock, this means the interrupt will occur on the second overflow after the overflow that sampled desired event.

Figure 20-4. Dual Comparator Configuration Examples

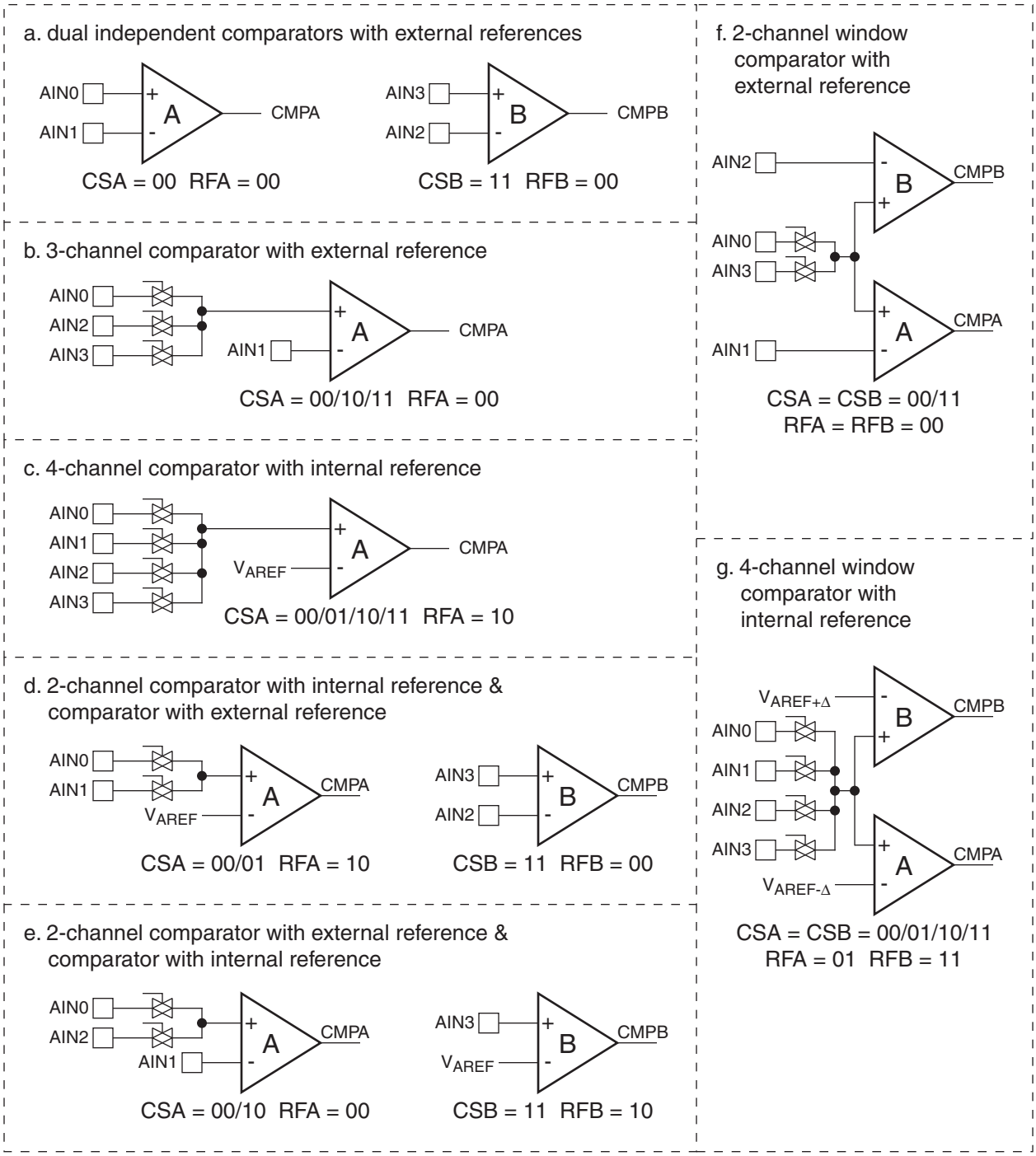

Table 20-1. ACSRA – Analog Comparator A Control & Status Register

ACSRA = A3H — Reset Value = 0000 0000B

Not Bit Addressable

	CSA1	CSA0	CONA	CFA	CENA	CMA2	CMA1	CMA0
Bit	7	6	5	4	3	2	1	0

Symbol	Function
CSA_{1-0}	**Comparator A Positive Input Channel Select**[1] **CSA1** / **CSA0** / **A+ Channel** 0 / 0 / AIN0 (P2.4) 0 / 1 / AIN1 (P2.5) 1 / 0 / AIN2 (P2.6) 1 / 1 / AIN3 (P2.7)
CONA	**Comparator A Input Connect** When CONA = 1 the analog input pins are connected to the comparator. When CONA = 0 the analog input pins are disconnected from the comparator. CONA must be cleared to 0 before changing CSA[1-0] or RFA[1-0].
CFA	**Comparator A Interrupt Flag** Set when the comparator output meets the conditions specified by the CMA [2-0] bits and CENA is set. The flag must be cleared by software. The interrupt may be enabled/disabled by setting/clearing bit 6 of IE.
CENA	**Comparator A Enable** Set this bit to enable the comparator. Clearing this bit will force the comparator output low and prevent further events from setting CFA. When CENA = 1 the analog input pins, P2.4—P2.7, have their digital inputs disabled if they are configured in input-only mode.
CMA_{2-0}	**Comparator A Interrupt Mode** **CMA2** / **CMA1** / **CMA0** / **Interrupt Mode** 0 / 0 / 0 / Negative (Low) level 0 / 0 / 1 / Positive edge 0 / 1 / 0 / Toggle with debouncing[2] 0 / 1 / 1 / Positive edge with debouncing[2] 1 / 0 / 0 / Negative edge 1 / 0 / 1 / Toggle 1 / 1 / 0 / Negative edge with debouncing[2] 1 / 1 / 1 / Positive (High) level

Notes: 1. CONA must be cleared to 0 before changing CSA_{1-0}.
2. Debouncing modes require the use of Timer 1 to generate the sampling delay.

Table 20-2. ACSRB – Analog Comparator B Control & Status Register

ACSRB = ABH — Reset Value = 1100 0000B

Not Bit Addressable

	CSB1	CSB0	CONB	CFB	CENB	CMB2	CMB1	CMB0
Bit	7	6	5	4	3	2	1	0

Symbol	Function
CSB_{1-0}	**Comparator B Positive Input Channel Select**[1] **CSB1** / **CSB0** / **B+ Channel** 0 / 0 / AIN0 (P2.4) 0 / 1 / AIN1 (P2.5) 1 / 0 / AIN2 (P2.6) 1 / 1 / AIN3 (P2.7)
CONB	**Comparator B Input Connect** When CONB = 1 the analog input pins are connected to the comparator. When CONB = 0 the analog input pins are disconnected from the comparator. CONB must be cleared to 0 before changing CSB[1-0] or RFB[1-0].
CFB	**Comparator B Interrupt Flag** Set when the comparator output meets the conditions specified by the CMB [2-0] bits and CENB is set. The flag must be cleared by software. The interrupt may be enabled/disabled by setting/clearing bit 6 of IE.
CENB	**Comparator B Enable** Set this bit to enable the comparator. Clearing this bit will force the comparator output low and prevent further events from setting CFB. When CENB = 1 the analog input pins, P2.4—P2.7, have their digital inputs disabled if they are configured in input-only mode.
CMB_{2-0}	**Comparator B Interrupt Mode** **CMB2** / **CMB1** / **CMB0** / **Interrupt Mode** 0 / 0 / 0 / Negative (Low) level 0 / 0 / 1 / Positive edge 0 / 1 / 0 / Toggle with debouncing[2] 0 / 1 / 1 / Positive edge with debouncing[2] 1 / 0 / 0 / Negative edge 1 / 0 / 1 / Toggle 1 / 1 / 0 / Negative edge with debouncing[2] 1 / 1 / 1 / Positive (High) level

Notes: 1. CONB must be cleared to 0 before changing CSB_{1-0}.
2. Debouncing modes require the use of Timer 1 to generate the sampling delay.

Table 20-3. AREF – Analog Comparator Reference Control Register

AREF = BDH — Reset Value = 0000 0000B

Not Bit Addressable

	CMPB	CMPA	RFB1	RFB0	CCS1	CCS0	RFA1	RFA0
Bit	7	6	5	4	3	2	1	0

Symbol	Function
CMPB	**Comparator B Output.** Copy of Comparator B raw output value sampled by the system clock.
CMPA	**Comparator A Output** Copy of Comparator A raw output value sampled by the system clock.
RFB_{1-0}	**Comparator B Negative Input Channel Select**[1] **CRF1 — RFB0 — B- Channel** 0 — 0 — AIN2 (P2.6) 0 — 0 — Internal $V_{AREF-\Delta}$ (~1.125V) 0 — 1 — Internal V_{AREF} (~1.25V) 0 — 1 — Internal $V_{AREF+\Delta}$ (~1.375V)
CCS_{1-0}	**Comparator Clock Select** **CCS1 — CCS0 — Clock Source** 0 — 0 — System Clock 0 — 0 — Timer 0 Overflow 0 — 1 — Timer 1 Overflow 0 — 1 — Timer 2 Overflow
RFA_{1-0}	**Comparator A Negative Input Channel Select**[2] **RFA1 — RFA0 — A- Channel** 0 — 0 — AIN1 (P2.5) 0 — 0 — Internal $V_{AREF-\Delta}$ (~1.125V) 0 — 1 — Internal V_{AREF} (~1.25V) 0 — 1 — Internal $V_{AREF+\Delta}$ (~1.375V)

Notes: 1. CONB (ACSRB.5) must be cleared to 0 before changing RFB[1-0].
2. CONA (ACSRA.5) must be cleared to 0 before changing RFA[1-0].

21. Digital-to-Analog/Analog-to-Digital Converter

The AT89LP51RB2/RC2/IC2 includes a 10-bit Data Converter (DADC) with the following features:

- Digital-to-Analog (DAC) or Analog-to-Digital (ADC) Mode
- 10-bit Resolution
- 6.5 µs Conversion Time
- 7 Multiplexed Single-ended Channels or 3 Differential Channels
- Internal Temperature Sensor or Supply Voltage Channels
- Selectable 1.0V±10% Internal Reference Voltage
- Optional Left-Adjust of Conversion Results
- Single Conversion or Timer-triggered Mode
- Interrupt on Conversion Complete

The AT89LP51RB2/RC2/IC2 features a 10-bit successive approximation data converter that functions in either Analog-to-Digital (ADC) or Digital-to-Analog (DAC) mode. A block diagram of the converter is shown in Figure 21-1. An 8-channel Analog Multiplexer connects eight single-ended or four differential voltage inputs from the pins of Port 0 to a sample-and-hold circuit that in turn provides an input to the successive approximation block. The Sample-and-Hold circuit ensures that the input voltage to the ADC is held at a constant level during conversion. The SAR block digitizes the analog voltage into a 10-bit value accessible through a data register. The SAR block also operates in reverse to generate an analog voltage on Port 2 from a 10-bit digital value.

ADC results are available in the DADL and DADH register pair. The ADC result scale is determined by the reference voltage (V_{REF}) generated either internally from a 1.0V reference or externally from $V_{DD}/2$. The ADC results are always represented in signed 2's complement form, with single-ended voltage channels referring to the level above or below $V_{DD}/2$. The 10-bit results may be right or left adjusted within the 16-bit register. The sign is extended through the 6 MSBs of right-adjusted results and the 6 LSBs of left-adjusted results are zeroed. If only 8-bit precision is required, the user should select left-adjusted by setting LADJ in DADC and read only the DADH register. Example results are listed in Table 21-1.

The conversion formulas are as follows:

$$\text{(Singled-Ended)} \qquad ADC = 511 \times \frac{V_{IN} - (V_{DD}/2)}{V_{REF}}$$

$$\text{(Differential)} \qquad ADC = 511 \times \frac{V_{IN+} - V_{IN-}}{V_{REF}}$$

Conversion results can be converted into unsigned binary by adding 02h to DADH in right-adjusted mode or 80h to DADH in left-adjusted mode. When using the external reference ($V_{DD}/2$) in single-ended mode this is equivalent to:

$$\text{(Unsigned Singled-Ended)} \qquad ADC = 1023 \times \frac{V_{IN}}{V_{DD}}$$

To convert the unsigned binary value back to 2's complement, subtract 02h from DADH in right-adjusted mode or 80h from DADH in left-adjusted mode. Note that the DADH/DADL registers cannot be directly manipulated as they are read-only in ADC mode and write-only in DAC mode.

Figure 21-1. DADC Block Diagram

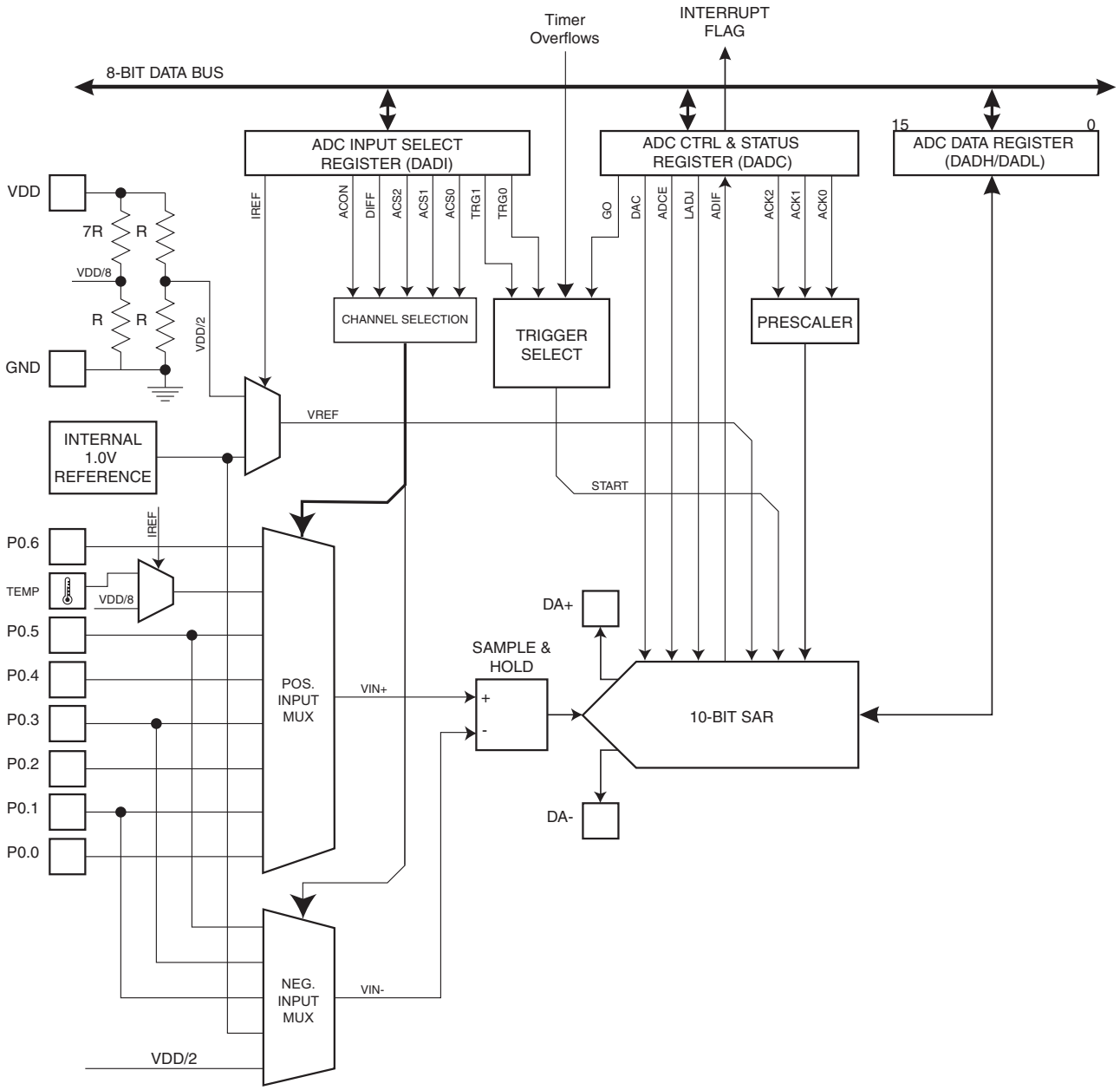

Table 21-1. Example ADC Conversion Codes

Right Adjust	Left Adjust	Single-Ended Mode (V_{IN})	Differential Mode ($V_{IN+} – V_{IN-}$)
0	0	$V_{DD}/2$	0
0100h	4000h	$V_{DD}/2 + 1/2 \times V_{REF}$	$1/2 \times V_{REF}$
01FFh	7FC0h	$V_{DD}/2 + 511/512 \times V_{REF}$	$511/512 \times V_{REF}$
FF00h	C000h	$V_{DD}/2 – 1/2 \times V_{REF}$	$–1/2 \times V_{REF}$
FE01h	8040h	$V_{DD}/2 – 511/512 \times V_{REF}$	$–511/512 \times V_{REF}$

21.1 ADC Operation

The ADC converts an analog input voltage to a 10-bit signed digital value through successive approximation. When DIFF (DADI.3) is zero, the ADC operates in single-ended mode and the input voltage is the difference between the voltage at the input pin and $V_{DD}/2$. In differential mode (DIFF = 1) the input voltage is the difference between the positive and negative input pins. The minimum value represents zero difference and the maximum values represent a difference of positive or negative V_{REF} minus 1 LSB.

The analog input channel is selected by writing to the ACS bits in DADI. The first six Port 0 input pins can be selected as single-ended inputs to the ADC. Three pairs of Port 0 pins can be selected as differential inputs.The ACON bit (DADI.7) must be set to one to connect the input pins to the ADC. Prior to changing ACS, ACON must be cleared to zero. This ensures that crosstalk between channels is limited. ACON must be set back to one after ACS is updated. ACON and ACS should not be changed while a conversion is in progress. ADC input channels must have their port pins configured for input-only mode. The AT89LP51RB2/RC2/IC2 also includes an on-chip temperature sensor and voltage supply channel. These features are available when ACS = 6. See Section 21.2.

The equivalent model for the analog input circuitry is illustrated in Figure 21-2. An analog source applied to ADCn is subjected to the pin capacitance and input leakage of that pin, regardless of whether that channel is selected as input to the ADC. When the channel is selected, the source must drive the S/H capacitor through the series resistance (combined resistance in the input path). To achieve 10-bit resolution the S/H capacitor must be charged to within 1/2 LSB of the expected value within the 1 ADC clock period sample time. High impedance sources may require a reduction in the ADC clock frequency to achieve full resolution.

Figure 21-2. Equivalent Analog Input Model

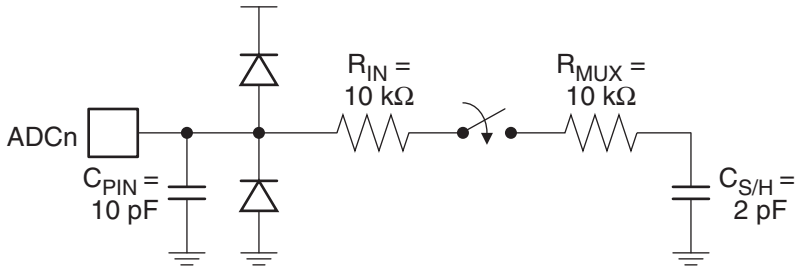

The ADC is enabled by setting the ADCE bit in DADC. Some settling time is required for the reference circuits to stabilize after the ADC is enabled. The ADC does not consume power when ADCE is cleared, so it is recommended to switch off the ADC before entering power saving modes.

A timing diagram of an ADC conversion is shown in Figure 21-3. The conversion requires 13 ADC clock cycles to complete. The analog input is sampled during the third cycle of the conversion and is held constant for the remainder of the conversion. At the end of the conversion, the interrupt flag, ADIF, is set and the result is written to the data registers. An additional 1 ADC clock cycle and up to 2 system clock cycles may be required to synchronize ADIF with the rest of the system. The results in DADH/DADL remain valid until the next conversion completes. DADH and DADL are read-only registers during ADC mode.

Figure 21-3. ADC Timing Diagram

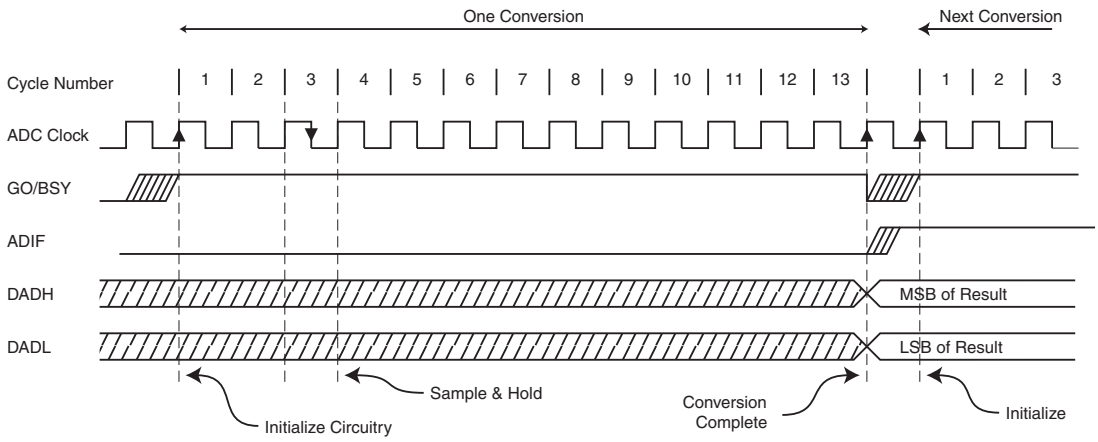

21.2 Temperature Sensor

ADC input channel 6 is not connected to a port pin. Instead it has a connection to two internal special functions: a temperature sensor and a voltage supply monitor. When ACS = 6 the IREF bit in DADI selects between them, such that IREF = 0 selects the voltage supply channel and IREF = 1 select the temperature sensor channel. Both these modes use the internal 1.0V reference for the full scale and the negative input. The temperature sensor outputs a voltage that is proportional to the ambient operating temperature. The uncalibrated output is linear and is suitable for relative temperature measurements. The supply voltage channel is the device supply level divided-by-8. It can be used to find the actual operating voltage of the device.

The following conversion formulae apply for temperature sensor and supply monitor modes:

$$\text{(Temp Sensor)} \qquad ADC = 511 \times \frac{V_{TEMP} - V_{REF}}{V_{REF}}$$

$$\text{(Supply Voltage)} \qquad ADC = 511 \times \frac{(VDD/8) - V_{REF}}{V_{REF}}$$

21.3 DAC Operation

The DAC converts a 10-bit signed digital value to an analog output voltage through successive approximation. The DAC always operates in differential mode, outputting a voltage differential between its positive (P2.2) and negative (P2.3) outputs with a common mode of $V_{DD}/2$. The minimum value represents zero difference and the maximum values represent a difference of positive or negative V_{REF} minus 1 LSB.

The DAC is enabled by setting the ADCE and DAC bits in DADC. Some settling time is required for the reference circuits to stabilize after the DAC is enabled. The DAC does not have multiple

output channels and the DIFF, ACON and ACS bits have no effect in DAC mode. P2.2 and P2.3 are automatically forced to input-only mode while the DAC is enabled.

A timing diagram of a DAC conversion is shown in Figure 21-4. The conversion requires 11 ADC clock cycles to complete. Construction of the analog output starts in the second cycle of the conversion and the DAC will allow the new value to propagate to the outputs during cycle 7, after the 5 MSBs are complete. At the end of the conversion, the interrupt flag is set. An additional 1 ADC clock cycle and up to 2 system clock cycles may be required to synchronize ADIF with the rest of the system. The DADL and DADH registers hold the value to be output and are write-only during DAC mode. An internal buffer samples DADH/DADL at the start of the conversion and holds the value constant for the remainder of the conversion. One system clock cycle is required to transfer the contents of DADH/DADL into the buffer at the start of the conversion and therefore the ADC clock frequency must always be equal to or less than the system clock frequency during DAC mode to ensure that the buffer is updated before the second cycle.

Figure 21-4. DAC Timing Diagram

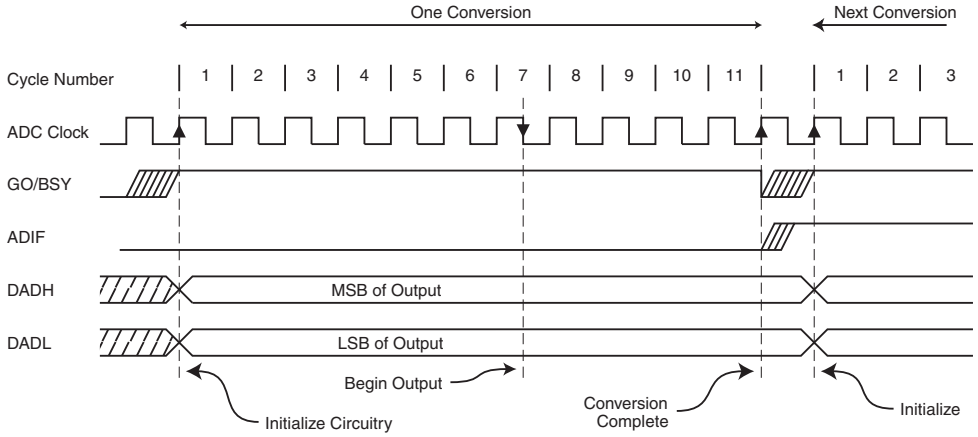

The equivalent model for the analog output circuitry is illustrated in Figure 21-5. The series output resistance of the DAC must drive the pin capacitance and any external load on the pin.

Figure 21-5. Equivalent Analog Output Model

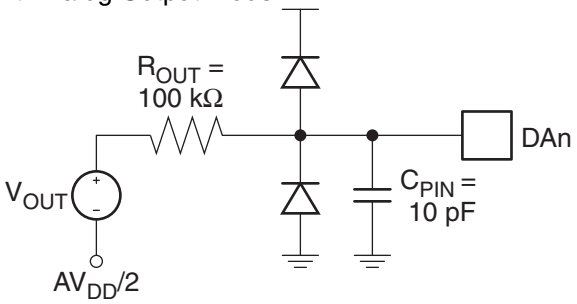

21.4 Clock Selection

The DADC requires a clock of 2 MHz or less to achieve full resolution. By default the DADC will use an internal 2 MHz clock generated from the 8 MHz internal oscillator. The internal oscillator will be enabled even if it is not supplying the system clock. This may result in higher power consumption. Conversely, the DADC clock can be generated directly from the system oscillator using a 7-bit prescaler. The prescaler output is controlled by the ACK bits in DADC as shown in Figure 21-6. The prescaler is independent of any X2 or CKRL division used for the CPU clock.

In ADC mode, there are no requirements on the clock frequency with respect to the system clock. The ADC prescaler selection is independent of the system clock divider and the ADC may operate at both higher or lower frequencies than the CPU. However, in DAC mode the ADC clock frequency must not be higher than the CPU clock, including any clock division from the system clock.

Figure 21-6. DADC Clock Selection

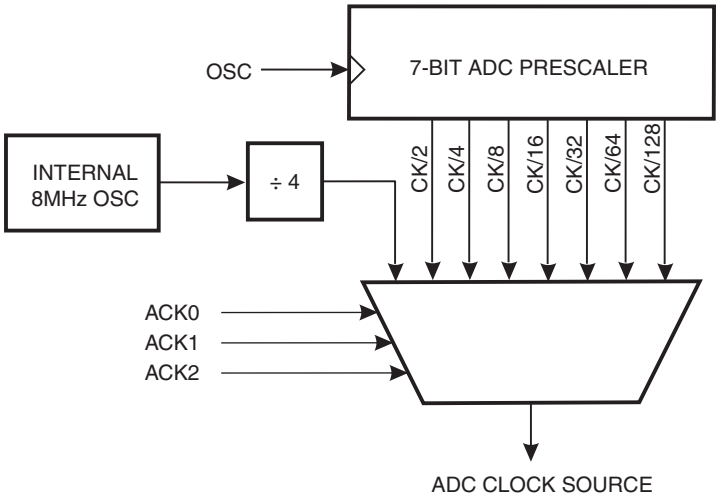

21.5 Starting a Conversion

Setting the GO/BSY bit (DADC.6) when ADCE = 1 starts a single conversion in both ADC and DAC modes. The bit remains set while the conversion is in progress and is cleared by hardware when the conversion completes. The ADC channel should not be changed while a conversion is in progress.

Alternatively, a conversion can be started automatically by various timer sources. Conversion trigger sources are selected by the TRG bits in DADI. A conversion is started every time the selected timer overflows, allowing for conversions to occur at fixed intervals. The GO/BSY bit will be set by hardware while the conversion is in progress. Note that the timer overflow rate must be slower than the conversion time.

21.6 Noise Considerations

Digital circuitry inside and outside the device generates EMI which might affect the accuracy of analog measurements. If conversion accuracy is critical, the noise level can be reduced by applying the following techniques:

- Keep analog signal paths as short as possible. Make sure to run analog signals tracks over an analog ground plane, and keep them well away from high-speed digital tracks.
- Place the CPU in Idle during a conversion. For best results, use a Timer to start the conversion while CPU is already in Idle Mode.
- If any Port 0 pins are used as digital outputs, it is essential that these do not switch while a conversion is in progress.

21.7 Registers

Table 21-2. DADC – DADC Control Register

DADC = A4H — Reset Value = 0000 0000B

Not Bit Addressable

	ADIF	GO/BSY	DAC	ADCE	LADJ	ACK2	ACK1	ACK0
Bit	7	6	5	4	3	2	1	0

Symbol	Function
ADIF	**ADC Interrupt Flag** Set by hardware when a conversion completes. Cleared by hardware when calling the interrupt service routine.
GO/BSY	**Conversion Start/Busy Flag** In software triggered mode, writing a 1 to this bit starts a conversion. The bit remains high while the conversion is in progress and is cleared by hardware when the conversion completes. In hardware triggered mode, this bit is set and cleared by hardware to flag when the DADC is busy.
DAC	**Digital-to-Analog Conversion Enable** Set to configure the DADC in Digital-to-Analog (DAC) mode. Clear to configure the DADC in Analog-to-Digital (ADC) mode.
ADCE	**DADC Enable** Set to enable the DADC. Clear to disable the DADC.
LADJ	**Left Adjust Enable** When cleared, the ADC results are right adjusted and the MSBs are sign extended. When set, the ADC results are left adjusted and the LSBs are zeroed.
ACK_{2-0}	**DADC Clock Select** **ACK3 ACK1 ACK0 Clock Source**[1] 0 0 0 Internal RC Oscillator/4 (2MHz) 0 0 1 $f_{OSC}/2$ 0 1 0 $f_{OSC}/4$ 0 1 1 $f_{OSC}/8$ 1 0 0 $f_{OSC}/16$ 1 0 1 $f_{OSC}/32$ 1 1 0 $f_{OSC}/64$ 1 1 1 $f_{OSC}/128$

Note: 1. f_{OSC} is the frequency of the system clock oscillator source before the X1/X2 and CKRL dividers.

Table 21-3. DADI – DADC Input Control Register

DADI = A5H — Reset Value = 0000 0000B

Not Bit Addressable

	ACON	IREF	TRG1	TRG0	DIFF	ACS2	ACS1	ACS0
Bit	7	6	5	4	3	2	1	0

Symbol	Function
ACON	**Analog Input Connect** When cleared, the analog inputs are disconnected from the ADC. When set, the analog inputs selected by ACS_{2-0} are connected to the ADC. ACON must be zero when changing the input channel multiplexor (ACS_{2-0}).
IREF	**Internal Reference Enable** When set, the DADC uses the internal voltage reference. When cleared the DADC uses VDD for its reference.
DIFF	**Differential Mode Enable** Set to configure the ADC in differential mode. Clear to configure the ADC in single-ended mode.
TRG_{1-0}	**Trigger Select**

TRG1	TRG0	Trigger
0	0	Software (GO bit)
0	1	Timer 0 Overflow
1	0	Timer 1 Overflow
1	1	Timer 2 Overflow

ACS_{2-0} — **ADC Channel Select**

DIFF	ACS2	ACS1	ACS0	V+	V-
0	0	0	0	P0.0	VDD/2
0	0	0	1	P0.1	VDD/2
0	0	1	0	P0.2	VDD/2
0	0	1	1	P0.3	VDD/2
0	1	0	0	P0.4	VDD/2
0	1	0	1	P0.5	VDD/2
0	1	1	0	V_{TEMP}[1]	V_{REF}
0	1	1	1	P0.6	VDD/2
1	0	0	0	P0.0	P0.1
1	0	0	1	P0.2	P0.3
1	0	1	0	P0.4	P0.5
1	0	1	1	reserved	
1	1	X	X	reserved	

Note: 1. V_{TEMP} is provided by the temperature sensor when IREF = 1. Otherwise V_{TEMP} = VDD/8 when IREF = 0.

Table 21-4. DADL – DADC Data Low Register

DADL = ACH — Reset Value = 0000 0000B

Not Bit Addressable

	ADC.7	ADC.6	ADC.5	ADC.4	ADC.3	ADC.2	ADC.1	ADC.0
Bit	7	6	5	4	3	2	1	0

Note: When LADJ = 0, bits 7–0 of the ADC result are found in bits 7–0 of DADL.
When LADJ = 1, bits 1–0 of the ADC result are found in bits 7–6 of DADL. Bits 5–0 are cleared to zero.

Table 21-5. DADH – DADC Data High Register

DADH = ADH — Reset Value = 0000 0000B

Not Bit Addressable

	ADC.15	ADC.14	ADC.13	ADC.12	ADC.11	ADC.10	ADC.9	ADC.8
Bit	7	6	5	4	3	2	1	0

Note: When LADJ = 0, bits 9–8 of the ADC result are found in bits 1–0 of DADH. Bits 7–2 are signed extended copies of bit 1.
When LADJ = 1, bits 9–2 of the ADC result are found in bits 7–0 of DADH.

22. Instruction Set Summary

The AT89LP51RB2/RC2/IC2 is fully binary compatible with the 8051 instruction set. In Compatibility mode the AT89LP51RB2/RC2/IC2 has identical execution time with AT89C51RB2/RC2/IC2 and other standard 8051s. The difference between the AT89LP51RB2/RC2/IC2 in Fast mode and the standard 8051 is the number of cycles required to execute an instruction. Fast mode instructions may take 1 to 5 clock cycles to complete. The execution times of most instructions may be computed using Table 22-1. Note that for the purposes of this table, a clock cycle is one period of the output of the system clock divider. For Fast mode the divider defaults to 1, so the clock cycle equals the oscillator period. For Compatibility mode the divider defaults to 2, so the clock cycle is twice the oscillator period, or conversely the clock count is half the number of oscillator periods.

Table 22-1. Instruction Execution Times and Exceptions[1]

Generic Instruction Types	Fast Mode Cycle Count Formula
Most arithmetic, logical, bit and transfer instructions	# bytes
Branches and Calls	# bytes + 1
Single Byte Indirect (i.e. ADD A, @Ri, etc.)	2
RET, RETI	4
MOVC	3
MOVX	4[3]
MUL	2
DIV	4
MAC	9
INC DPTR	2

		Clock Cycles		
Arithmetic	**Bytes**	**Compatibility**	**Fast**	**Hex Code**
ADD A, Rn	1	6	1	28-2F
ADD A, direct	2	6	2	25
ADD A, @Ri	1	6	2	26-27
ADD A, #data	2	6	2	24
ADDC A, Rn	1	6	1	38-3F
ADDC A, direct	2	6	2	35
ADDC A, @Ri	1	6	2	36-37
ADDC A, #data	2	6	2	34
SUBB A, Rn	1	6	1	98-9F
SUBB A, direct	2	6	2	95
SUBB A, @Ri	1	6	2	96-97
SUBB A, #data	2	6	2	94
INC Rn	1	6	1	08-0F
INC direct	2	6	2	05
INC @Ri	1	6	2	06-07
INC A	2	6	2	04

Table 22-1. Instruction Execution Times and Exceptions[1] (Continued)

DEC Rn	1	6	1	18-1F
DEC direct	2	6	2	15
DEC @Ri	1	6	2	16-17
DEC A	2	6	2	14
INC DPTR	1	12	2	A3
INC /DPTR[2]	2	18	3	A5 A3
MUL AB	1	24	2	A4
DIV AB	1	24	4	84
DA A	1	6	1	D4
MAC AB[2]	2	–	9	A5 A4
CLR M[2]	2	–	2	A5 E4
ASR M[2]	2	–	2	A5 03
LSL M[2]	2	–	2	A5 23
		Clock Cycles		
Logical	**Bytes**	**Compatibility**	**Fast**	**Hex Code**
CLR A	1	6	1	E4
CPL A	1	6	1	F4
ANL A, Rn	1	6	1	58-5F
ANL A, direct	2	6	2	55
ANL A, @Ri	1	6	2	56-57
ANL A, #data	2	6	2	54
ANL direct, A	2	6	2	52
ANL direct, #data	3	12	3	53
ORL A, Rn	1	6	1	48-4F
ORL A, direct	2	6	2	45
ORL A, @Ri	1	6	2	46-47
ORL A, #data	2	6	2	44
ORL direct, A	2	6	2	42
ORL direct, #data	3	12	3	43
XRL A, Rn	1	6	1	68-6F
XRL A, direct	2	6	2	65
XRL A, @Ri	1	6	2	66-67
XRL A, #data	2	6	2	64
XRL direct, A	2	6	2	62
XRL direct, #data	3	12	3	63
RL A	1	6	1	23
RLC A	1	6	1	33
RR A	1	6	1	03
RRC A	1	6	1	13

Table 22-1. Instruction Execution Times and Exceptions[1] (Continued)

SWAP A	1	6	1	C4
		Clock Cycles		
Data Transfer	**Bytes**	**Compatibility**	**Fast**	**Hex Code**
MOV A, Rn	1	6	1	E8-EF
MOV A, direct	2	6	2	E5
MOV A, @Ri	1	6	2	E6-E7
MOV A, #data	2	6	2	74
MOV Rn, A	1	6	1	F8-FF
MOV Rn, direct	2	12	2	A8-AF
MOV Rn, #data	2	6	2	78-7F
MOV direct, A	2	6	2	F5
MOV direct, Rn	2	12	2	88-8F
MOV direct, direct	3	12	3	85
MOV direct, @Ri	2	12	2	86-87
MOV direct, #data	3	12	3	75
MOV @Ri, A	1	6	1	F6-F7
MOV @Ri, direct	2	12	2	A6-A7
MOV @Ri, #data	2	6	2	76-77
MOV DPTR, #data16	3	12	3	90
MOV /DPTR, #data16[2]	4	–	4	A5 90
MOVC A, @A+DPTR	1	12	3	93
MOVC A, @A+/DPTR[2]	2	–	4	A5 93
MOVC A, @A+PC	1	12	3	83
MOVX A, @Ri	1	12	2	E2-E3
MOVX A, @DPTR	1	12[3]	4[3]	E0
MOVX A, @/DPTR[2]	2	18[3]	5[3]	A5 E0
MOVX @Ri, A	1	12	2	F2-F3
MOVX @DPTR, A	1	12[3]	4[3]	F0
MOVX @/DPTR, A[2]	2	18[3]	5[3]	A5 F0
PUSH direct	2	12	2	C0
POP direct	2	12	2	D0
XCH A, Rn	1	6	1	C8-CF
XCH A, direct	2	6	2	C5
XCH A, @Ri	1	6	2	C6-C7
XCHD A, @Ri	1	6	2	D6-D7
		Clock Cycles		
Bit Operations	**Bytes**	**Compatibility**	**Fast**	**Hex Code**
CLR C	1	6	1	C3
CLR bit	2	6	2	C2

Table 22-1. Instruction Execution Times and Exceptions[1] (Continued)

SETB C	1	6	1	D3
SETB bit	2	6	2	D2
CPL C	1	6	1	B3
CPL bit	2	6	2	B2
ANL C, bit	2	12	2	82
ANL C, bit	2	12	2	B0
ORL C, bit	2	12	2	72
ORL C, /bit	2	12	2	A0
MOV C, bit	2	6	2	A2
MOV bit, C	2	12	2	92
		Clock Cycles		
Branching	**Bytes**	**Compatibility**	**Fast**	**Hex Code**
JC rel	2	12	3	40
JNC rel	2	12	3	50
JB bit, rel	3	12	4	20
JNB bit, rel	3	12	4	30
JBC bit, rel	3	12	4	10
JZ rel	2	12	3	60
JNZ rel	2	12	3	70
SJMP rel	2	12	3	80
ACALL addr11	2	12	3	11,31,51,71,91, B1,D1,F1
LCALL addr16	3	12	4	12
RET	1	12	4	22
RETI	1	12	4	32
AJMP addr11	2	12	3	01,21,41,61,81, A1,C1,E1
LJMP addr16	3	12	4	02
JMP @A+DPTR	1	12	2	73
JMP @A+PC[2]	2	12	3	A5 73
CJNE A, direct, rel	3	12	4	B5
CJNE A, #data, rel	3	12	4	B4
CJNE Rn, #data, rel	3	12	4	B8-BF
CJNE @Ri, #data, rel	3	12	4	B6-B7
CJNE A, @R0, rel[2]	3	18	4	A5 B6
CJNE A, @R1, rel[2]	3	18	4	A5 B7
DJNZ Rn, rel	2	12	3	D8-DF
DJNZ direct, rel	3	12	4	D5
NOP	1	6	1	00

Notes: 1. A clock cycle is one period of the output of the system clock divider. For Fast mode the divider defaults to 1, so the clock cycle equals the oscillator period. For Compatibility mode the divider

defaults to 2, so the clock cycle is twice the oscillator period, or conversely the clock count is half the number of oscillator periods.

2. This escaped instruction is an extension to the instruction set.
3. This is the minimum time for MOVX with no wait states. In Compatibility mode an additional 24 clocks are added for the wait state. In Fast mode, 1 clock is added for each wait state (0–3).

22.1 Instruction Set Extensions

The following instructions are extensions to the standard 8051 instruction set that provide enhanced capabilities not found in standard 8051 devices. All extended instructions start with an A5H escape code. For this reason random A5H reserved codes should not be placed in the instruction stream even though other devices may have treated these as NOPs.

Other AT89LP devices may not support all of these instructions.

22.1.1 ASR M

Function: Shift MAC Accumulator Right Arithmetically

Description: The forty bits in the M register are shifted one bit to the right. Bit 39 retains its value to preserve the sign of the value. No flags are affected.

Example: The M register holds the value 0C5B1A29384H . The following instruction,

ASR M

leaves the M register holding the value 0E2D8D149C2H.

Bytes: 2

Cycles: 2

Encoding:

A5	0	0	0	0	0	0	1	1

Operation: ASR
$(M_n) \leftarrow (M_{n+1})$ n = 0 - 38
$(M_{39}) \leftarrow (M_{39})$

22.1.2 BREAK

Function: Software Breakpoint (Halt execution)

Description: BREAK transfers control from normal execution to the On-Chip Debug (OCD) handler if OCD is enabled. The PC is left pointing to the following instruction. If OCD is disabled, BREAK acts as a double NOP. No flags are affected.

Example: If On-Chip Debugging is allowed, the following instruction,

BREAK

will halt instruction execution prior to the immediately following instruction. If debugging is not allowed, the BREAK is treated as a double NOP.

Bytes: 2

Cycles: 2

Encoding:

A5	0	0	0	0	0	0	0	0

Operation: BREAK
(PC) ←(PC) + 2

22.1.3 CJNE A, @R_i, rel

Function: Compare and Jump if Not Equal

Description: CJNE compares the magnitudes of the Accumulator and indirect RAM location and branches if their values are not equal. The branch destination is computed by adding the signed relative-displacement in the last instruction byte to the PC, after incrementing the PC to the start of the next instruction. The carry flag is set if the unsigned integer value of ACC is less than the unsigned integer value of the indirect location; otherwise, the carry is cleared. Neither operand is affected.

Example: The Accumulator contains 34H. Register 0 contains 78H and 78H contains 56H. The first instruction in the sequence,

```
      CJNE    A, @R0, NOT_EQ
;           . . . . . .    ...... ...... ; ACC = @R0.
NOT_EQ:
        JC      REQ_LOW .. ;IF ACC< @R0.
;           . . . . . .    ...... ...... ;ACC > @R0.
```

sets the carry flag and branches to the instruction at label NOT_EQ. By testing the carry flag, the second instruction determines whether ACC is greater or less than the location pointed to by R0.

Bytes: 2

Cycles: 9

Encoding:

A5	1	0	1	1	0	1	1	i	rel. address

Operation: CJNE

(PC) ← (PC) + 3
IF (A) ≠ ((R$_i$))
THEN
    (PC) ← (PC) + relative offset
IF (A) < ((R$_i$))
THEN
    (C) ← 1
ELSE
    (C) ← 0

22.1.4 CLR M

Function: Clear MAC Accumulator

Description: CLR M clears the 40-bit M register. No flags are affected.

Example: The M registercontains 123456789AH. The following instruction,

CLR M

leaves the M register set to 0000000000H.

Bytes: 2

Cycles: 2

Encoding:

A5	1	1	1	0	0	1	0	0

Operation: JMP

(M) ←0

22.1.5 INC /DPTR

Function: Increment Alternate Data Pointer

Description: INC /DPTR increments the unselected 16-bit data pointer by 1. A 16-bit increment (modulo 2^{16}) is performed, and an overflow of the low-order byte of the data pointer from 0FFH to 00H increments the high-order byte. No flags are affected.

Example: Registers DP1H and DP1L contain 12H and 0FEH, respectively, and DPS = 0. The following instruction sequence,

```
INC     /DPTR
INC     /DPTR
INC     /DPTR
```

changes DP1H and DP1L to 13H and 01H.

Bytes: 2

Cycles: 3

Encoding:

A5	1	0	1	0	0	0	1	1

Operation:

```
INC
IF (DPS) = 0
THEN
    (DPTR1) ← (DPTR1) + 1
ELSE
    (DPTR0) ← (DPTR0) + 1
```

22.1.6 JMP @A+PC

Function: Jump indirect relative to PC

Description: JMP @A+PC adds the eight-bit unsigned contents of the Accumulator to the program counter, which is first incremented by two. This is the address for subsequent instruction fetches. Sixteen-bit addition is performed (modulo 2^{16}): a carry-out from the low-order eight bits propagates through the higher-order bits. The Accumulator is not altered. No flags are affected.

Example: An even number from 0 to 6 is in the Accumulator. The following sequence of instructions branches to one of four AJMP instructions in a jump table starting at JMP_TBL.

```
        JMP    @A + PC
JMP_TBL:
        AJMP   LABEL0
        AJMP   LABEL1
        AJMP   LABEL2
        AJMP   LABEL3
```

If the Accumulator equals 04H when starting this sequence, execution jumps to label LABEL2. Because AJMP is a 2-byte instruction, the jump instructions start at every other address.

Bytes: 2

Cycles: 3

Encoding:

A5	0	1	1	1	0	0	1	1

Operation:

```
JMP
(PC) ←(A) + (PC) + 2
```

22.1.7 LSL M

Function: Shift MAC Accumulator Left Logically

Description: The forty bits in the M register are shifted one bit to the left. Bit 0 is cleared. No flags are affected.

Example: The M register holds the value 0C5B1A29384H. The following instruction,

```
LSL   M
```

leaves the M register holding the value 8B63452708H.

Bytes: 2

Cycles: 2

Encoding:

A5	0	0	1	0	0	0	1	1

Operation: LSL
$(M_{n+1}) \leftarrow (M_n)$ n = 0 - 38
$(M_0) \leftarrow 0$

22.1.8 MOVC A, @A+/DPTR

Function: Move code byte relative to Alternate Data Pointer

Description: The MOVC instructions load the Accumulator with a code byte or constant from program memory. The address of the byte fetched is the sum of the original unsigned 8-bit Accumulator contents and the contents of the unselected Data Pointer. The base register is not altered. Sixteen-bit addition is performed so a carry-out from the low-order eight bits may propagate through higher-order bits. No flags are affected.

Example: A value between 0 and 3 is in the Accumulator. The following instructions will translate the value in the Accumulator to one of four values defined by the DB (define byte) directive.

```
    MOV     /DPTR, #TABLE
    MOVC    A, @A+PC
    RET

TABLE:
    DB      66H
    DB      77H
    DB      88H
    DB      99H
```

If the subroutine is called with the Accumulator equal to 01H, it returns with 77H in the Accumulator.

Bytes: 2

Cycles: 4

Encoding:

A5	1	0	0	1	0	0	1	1

Operation: MOVC
IF (DPS) = 0
THEN
    (A) ←((A) + (DPTR1))
ELSE
    (A) ←((A) + (DPTR0))

22.1.9 MAC AB

Function: Multiply and Accumulate

Description: MAC AB multiplies the signed 16-bit integers in the register pairs {AX, A} and {BX, B} and adds the 32-bit product to the 40-bit M register. The low-order bytes of the 16-bit operands are stored in A and B, and the high-order bytes in AX and BX respectively. The four operand registers are unaffected by the operation. If the addition of the product to the accumulated sum in M results in a two's complement overflow, the overflow flag is set; otherwise it is not cleared. The carry flag is set if the result is negative and cleared if positive.

Example: Originally the Accumulator holds the value 80 (50H). Register B holds the value 160 (0A0H). The instruction,

```
MAC   AB
```

will give the product 12, 800 (3200H), so B is changed to 32H (00110010B) and the Accumulator is cleared. The overflow flag is set, carry is cleared.

Bytes: 2

Cycles: 9

Encoding:

A5	1	0	1	0	0	1	0	0

Operation: MAC

$(M_{39\text{-}0}) \leftarrow (M) + \{ (AX), (A) \} X \{ (BX), (B) \}$

22.1.10 MOV /DPTR, #data16

Function: Load Alternate Data Pointer with a 16-bit constant

Description: MOV /DPTR, #data16 loads the unselected Data Pointer with the 16-bit constant indicated. The third byte is the high-order byte, while the fourth byte holds the lower-order byte. No flags are affected.

Example: When DPS = 0, the instruction sequence,

```
MOV    DPTR, # 1234H
MOV   /DPTR, # 5678H
```

loads the value 1234H into the first Data Pointer: DPH0 holds 12H and DPL0 holds 34H; and loads the value 5678H into the second Data Pointer: DPH1 hold 56H and DPL1 holds 78H.

Bytes: 2

Cycles: 3

Encoding:

A5	90	immed. data 15-8	immed. data 7-0

Operation: MOV

IF (DPS) = 0

THEN

$(DP1H) \leftarrow \#data_{15\text{-}8}$

$(DP1L) \leftarrow \#data_{7\text{-}0}$

ELSE

$(DP0H) \leftarrow \#data_{15\text{-}8}$

$(DP0L) \leftarrow \#data_{7\text{-}0}$

22.1.11 MOVX A, @/DPTR

Function: Move External using Alternate Data Pointer

Description: The MOVX instruction transfers data from external data memory to the Accumulator. The unselected Data Pointer generates a 16-bit address which targets EDATA, FDATA or XDATA.

Example: DPS = 0, DPTR0 contains 0123H and DPTR1 contains 4567H. The following instruction sequence,

```
MOVX    A, @DPTR
MOVX    @/DPTR, A
```

copies the data from address 0123H to 4567H.

Bytes: 2

Cycles: 3 (EDATA)
5 (FDATA or XDATA)

Encoding:

A5	1	1	1	0	0	0	0	0

Operation:

```
MOVX
IF (DPS) = 0
    (A) ← ((DPTR1))
ELSE
    (A) ← ((DPTR0))
```

22.1.12 MOVX @/DPTR, A

Function: Move External using Alternate Data Pointer

Description: The MOVX instruction transfer data from the Accumulator to external data memory. The unselected Data Pointer generates a 16-bit address which targets EDATA, FDATA or XDATA.

Example: DPS = 0, DPTR0 contains 0123H and DPTR1 contains 4567H. The following instruction sequence,

```
MOVX    A, @DPTR
MOVX    @/DPTR, A
```

copies the data from address 0123H to 4567H.

Bytes: 2

Cycles: 3 (EDATA)
5 (FDATA or XDATA)

Encoding:

A5	1	1	1	1	0	0	0	0

Operation:

```
MOVX
IF (DPS) = 0
THEN
    ((DPTR1)) ← (A)
ELSE
    ((DPTR0)) ← (A)
```

23. On-Chip Debug System

The AT89LP51RB2/RC2/IC2 On-Chip Debug (OCD) System uses a two-wire serial interface to control program flow; read, modify, and write the system state; and program the nonvolatile memory. The OCD System has the following features:

- Complete program flow control
- Read-Modify-Write access to all internal SFRs and data memories
- Four hardware program address breakpoints
- Four program/data address breakpoints configurable in 2 maskable pairs.
- Unlimited program software breakpoints using BREAK instruction
- Break on change in program memory flow
- Break on stack overflow/underflow
- Break on Watchdog overflow
- Break on reset
- Non-intrusive operation
- Programming of nonvolatile memory

23.1 Physical Interface

The On-Chip Debug System uses a two-wire synchronous serial interface to establish communication between the target device and the controlling emulator system. The OCD interface is enabled by clearing the OCD $\overline{\text{Enable}}$ Fuse. The OCD device connections are shown in Figure 23-1. When OCD is enabled, the RST port pin is configured as an input for the Debug Clock (DCL). P4.3 is a bi-directional data line for the Debug Data (DDA).

When designing a system where On-Chip Debug will be used, the following observations must be considered for correct operation:

- RST cannot be connected directly to V_{DD} or GND and any external capacitors or supervisors connected to RST must be removed.
- All external reset sources must be removed.
- OCD is shipped disabled from the factory. A device programmer is required to enable this fuse before debugging can occur.
- Enabling OCD disables the RST input and thereby disables the In-System Programming interface (ISP). ISP can only be re-entered by holding RST active at power-up. The bootloader remains active and has priority over the OCD system.

Figure 23-1. AT89LP51RB2/RC2/IC2 On-Chip Debug Connections

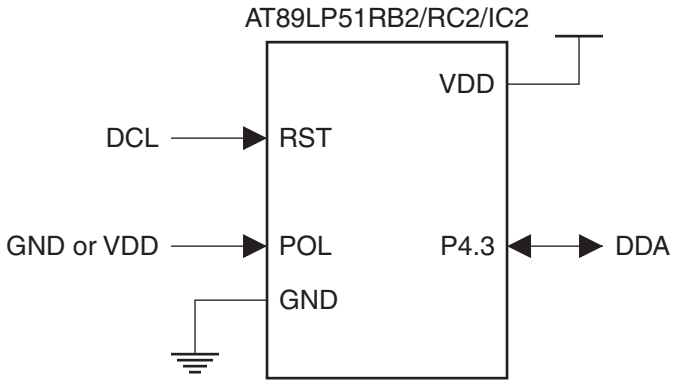

23.2 Software Breakpoints

The AT89LP51RB2/RC2/IC2 microcontroller includes a BREAK instruction for implementing program memory breakpoints in software. A software breakpoint can be inserted manually by placing the BREAK instruction in the program code. Some emulator systems may allow for automatic insertion/deletion of software breakpoints. The Flash memory must be re-programmed each time a software breakpoint is changed. Frequent insertions/deletions of software breakpoints will reduce the endurance of the nonvolatile memory. Devices used for debugging purposes should not be shipped to end customers. The BREAK instruction is treated as a two-cycle NOP when OCD is disabled.

23.3 Limitations of On-Chip Debug

The AT89LP51RB2/RC2/IC2 is a fully-featured microcontroller that multiplexes several functions on its limited I/O pins. Some device functionality must be sacrificed to provide resources for On-Chip Debugging. The On-Chip Debug System has the following limitations:

- The Debug Clock pin (DCL) is physically located on the same pin as the External Reset (RST). Therefore, an external reset source is unavailable and must be emulated when OCD is enabled. The Reset Output feature is also disabled except during POR
- The Debug Data pin DDA is physically located on the same pin as P4.3. The P4.3 I/O function cannot be emulated in this mode
- The bootloader has priority over OCD. Debugging is not possible when the bootloader is active (BLJB = 0 or hardware entry triggered)
- Programming of any hardware lockbit will disable OCD
- The OCD pins are not bonded in the 40-pin PDIP package. In order to debug the device, one of the 44-pin packages must be used

24. Flash Memory Programming

The Atmel AT89LP51RB2/RC2/IC2 microcontroller features 24K/32K bytes of on-chip In-System Programmable Flash program memory. In-System Programming allows programming and reprogramming of the microcontroller positioned inside the end system. The programmer communicates serially with the AT89LP51RB2/RC2/IC2 microcontroller, reprogramming all nonvolatile memories on the chip. In-System Programming eliminates the need for physical removal of the chips from the system. This will save time and money, both during development in the lab, and when updating the software or parameters in the field. The AT89LP51RB2/RC2/IC2 provides the following programming interfaces:

- **High-Speed, four-wire SPI-based programming interface (ISP)**
  This synchronous hardware interface programs the device while it is in reset and therefore, does not require the CPU to be operational, i.e. no clock is required except the SPI serial clock. This interface can be used both in-system and in a stand-alone programmer, and has full access to all nonvolatile memory resources. This interface is compatible with the Atmel AT89LP ISP Studio software. See Section 24.6 “In-System Programming (ISP)” on page 214 for more information.
- **12-pin parallel programming interface (PRL)**
  This interface is a submode of the SPI interface that allows data to be read/written one 8-bit byte at a time instead of serially 1-bit at a time. This interface is intended only for stand-alone programmers. An 87C51-compatible parallel interface is not available. See Section 24.6.1 “Physical Interface” on page 214 for more information.
- **ROM-based UART serial bootloader (BOOT)**
  When using this 2-pin asynchronous interface, the device runs a default software bootloader from an on-chip ROM. The system clock must be operational and will limit the speed at which the interface functions. This interface is intended for in-system use. It has full access to the Flash code memory, but does not have access to all configuration options. This interface is compatible with the Atmel FLIP software. See Section 24.5 “Bootloader” on page 199 for more information.
- **User-defined bootloader and/or In-Application Programming (IAP)**
  The ROM bootloader can call a user-defined bootloader located within the code memory instead of the default UART bootloader. The user is free to use any available interface to program the device. The ROM also contains an application programming interface (API) that implements the low-level routines necessary to perform in-application programming (IAP). It is recommended that users employ these functions instead of writing their own low-level routines. Advanced users may wish to implement their own routines in some cases. See Section 24.4 “In-Application Programming (IAP)” on page 190.

None of the programming interfaces require an external dedicated programming voltage. The necessary high programming voltage is generated on-chip using the standard V_{DD} pin of the microcontroller.

Note: In this document the term **Bootloader**, or **BOOT**, is used to when referring to the UART-based ROM bootloader and **In-System Programming**, or **ISP,** is used with reference to the SPI-based interface. This is different from AT89C51RB2/RC2/IC2 where ISP also referred to the bootloader (as no SPI programming interface was present). However, it should be noted that both interfaces are perfectly capable of performing in-system programming, i.e programming the device when it is already mounted in the final end-user system.

24.1 Memory Organization

The AT89LP51RB2/RC2/IC2 offers 24K/32K bytes of In-System Programmable nonvolatile Flash code memory. In addition, the device contains a 512-byte User Signature Array, a 128-byte read-only Atmel Signature Array and 19 User Configuration Fuses. The memory organization is shown in Table 24-1 and Figure 24-1. The code memory and auxiliary memories are divided into pages of 128 bytes each and share a temporary page buffer of 64 bytes (one half page). A single page erase operation will erase an entire 128-byte page, while a single write operation will only program half of a page. Therefore, two write operations are required for every erase operation when the whole page must be reprogrammed. This detail is transparent to the user when using the bootloader or Flash API.

Figure 24-1. AT89LP51RB2/RC2/IC2 Memory Organization

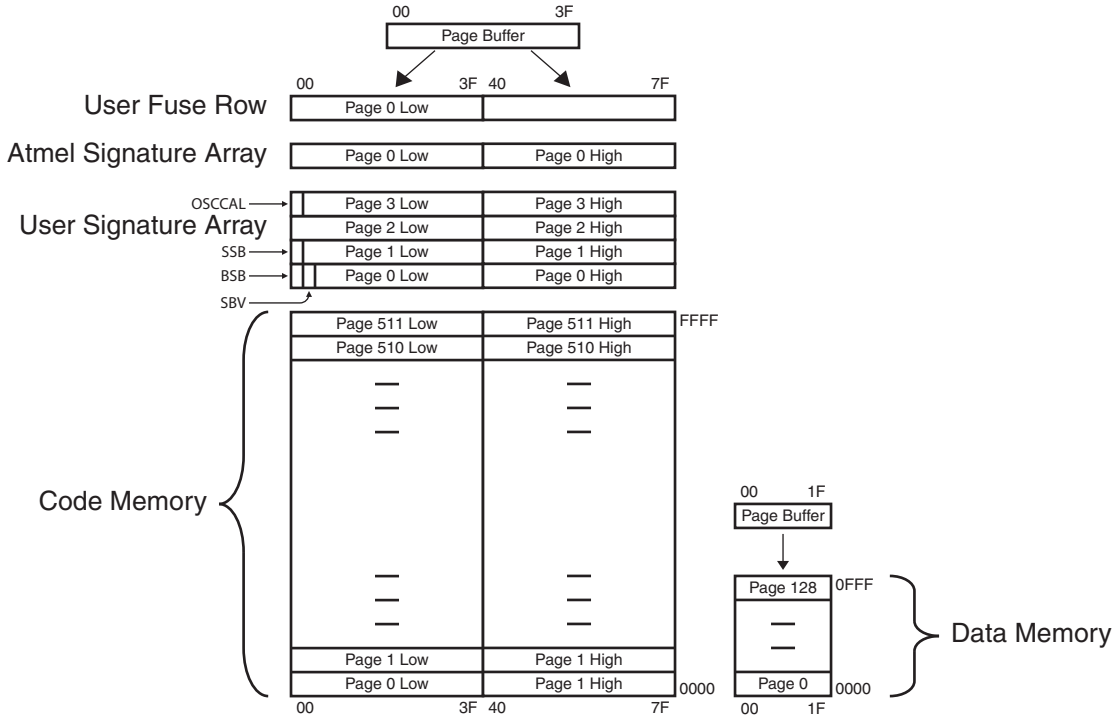

.

Table 24-1. AT89LP51RB2/RC2/IC2 Memory Organization

Memory	Capacity	Page Size	# Pages	Address Range
Code Flash	32768 bytes	128 bytes	256	0000H – 7FFFH
User Signature	512 bytes	128 bytes	4	0000H – 01FFH
Atmel Signature	128 bytes	128 bytes	1	0200H – 027FH

24.1.1 User Signature Array

The AT89LP51RB2/RC2/IC2 includes a 512-byte User Signature Array in four 128-byte pages. The User Signature Array is available for serial numbers, firmware revision information, date

codes or other user parameters. The User Signature Array may only be written by an external ISP programmer when the User Signature Programming Fuse is enabled. When the fuse is enabled, Chip Erase will also erase the third page of the array. When the fuse is disabled, none of the pages are affected by page erase/write commands and only pages one and two will be erased by Chip Erase. Table 24-3 summarizes this behavior. Programming of the Signature Array is also disabled by the Lock Bits. However, reading the signature is always allowed and the array should not be used to store security sensitive information. The User Signature Array may be modified during execution through the In-Application Programming interface, regardless of the state of the User Signature Programming fuse or Lock Bits.

Some locations of the User Signature Array have special meaning for the system as shown in Table 24-2. Pages one and two store bytes necessary for bootloader operation (See "Bootloader" on page 199). Page three stores a calibration byte for the internal RC Oscillator. This byte is read at power-up to set the frequency of the oscillator. Other bytes in these pages may be used as additional signature space; however, care should be taken to preserve the parameter values when modifying other bytes in the same page.

Table 24-2. User Signature Parameter Bytes

Name	Definition	Location	Default Value
BSB	Boot Status Byte	0000H	FFH
SBV	Software Boot Vector	0001H	FCH (or FFH)
SSB	Software Security Byte	0080H	FFH
OSCCAL	Oscillator Calibration	0180H	(1)

Note: 1. The Oscillator Calibration Byte controls the frequency of the internal RC oscillator. The frequency is inversely proportional to the calibration value such that higher values result in lower frequencies. A copy of the factory-set calibration value is stored at location 0008H of the Atmel Signature.

Table 24-3. User Signature ISP Programming Behavior

Page #	Address	Chip Erase	Page Erase	Page Write
0	0000–007FH	YES	By Fuse(1)	By Fuse(1)
1	0080–00HFH	YES	By Fuse(1)	By Fuse(1)
2	0100–017FH	By Fuse(2)	By Fuse(1)	By Fuse(1)
3	0180–01FFH	NO	By Fuse(1)	By Fuse(1)

Notes: 1. During ISP, a page erase/write of the user signature is only allowed when the User SIgnature Programming Fuse is active.
2. Chip Erase will erase this page only if the User SIgnature Programming Fuse is active.

24.1.2 Atmel Signature Array

The Atmel Signature Array is a 128-byte read-only array that contains the Device ID and related information. The Device ID values are shown in Table 24-4. A copy of the OSCCAL calibration byte is also stored at address 0008H.

Table 24-4. Device ID Values in Atmel Signature

Device	00H	01H	02H	30H	31H	60H	61H
AT89LP51RB2	1EH	62H	72H	58H	D7H	ECH	EFH
AT89LP51RC2	1EH	63H	72H	58H	D7H	ECH	EFH
AT89LP51IC2	1EH	63H	69H	58H	D7H	ECH	EFH

24.2 User Configuration Fuses

The AT89LP51RB2/RC2/IC2 includes 19 user fuses for configuration of the device. Each fuse is accessed at a separate address in the User Fuse Row, with each byte representing one fuse as listed in Table 24-5. From a programming standpoint, fuses are treated the same as normal code bytes except they are not affected by Chip Erase. Fuses can be cleared at any time by writing 00H to the appropriate locations in the fuse row. However, to set a fuse, i.e. write it to FFH the **entire** fuse row must be erased and then reprogrammed. The programmer should read the state of all the fuses into a temporary location, modify those fuses which need to be disabled, then issue a Fuse Write with Auto-Erase command using the temporary data.

Note that the bootloader only has limited access to the fuses. For full device configuration an external ISP programmer is required.

Table 24-5. User Configuration Fuse Definitions

Address	Fuse Name	Description
00 – 01H	Clock Source A – CSA[0:1][2]	Selects source for the system clock when using OSCA: CSA1 CSA0 Selected Source FFh FFh High Speed Crystal Oscillator on XTAL1A/XTAL2A (XTAL) FFh 00h Low Power Crystal Oscillator on XTAL1A/XTAL2A (XTAL) 00h FFh External Clock on XTAL1A (XCLK) 00h 00h Internal 8 MHz RC Oscillator (IRC)
02 – 03H	Start-up Time – SUT[0:1]	Selects time-out delay for the POR/BOD/PWD wake-up period: SUT1 SUT0 Selected Time-out 00h 00h 1 ms (XTAL); 16 µs (XCLK/IRC) 00h FFh 2 ms (XTAL); 512 µs (XCLK/IRC) FFh 00h 4 ms (XTAL); 1 ms (XCLK/IRC) FFh FFh 16 ms (XTAL); 4 ms (XCLK/IRC)
04H	Bootloader Jump Bit	FFh: Reset to user application at 0000H 00h: Reset to ROM bootloader at F800H
05H	External RAM Enable	FFh: External RAM enabled at reset (EXTRAM = 1) 00h: External RAM disabled at reset (EXTRAM = 0)
06H	Compatibility Mode	FFh: CPU functions in 12-clock Compatibility mode 00h: CPU functions is single-cycle Fast mode
07H	ISP Enable[3]	FFh: In-System Programming Enabled 00h: In-System Programming Disabled (Enabled at POR only)

Table 24-5. User Configuration Fuse Definitions

Address	Fuse Name	Description
08H	X1/X2 Mode	FFh: X1 Mode (System clock is divided-by-two) 00h: X2 Mode (System clock is not divided-by-two)
09H	OCD Enable	FFh: On-Chip Debug is Disabled 00h: On-Chip Debug is Enabled
0AH	User Signature Programming	FFh: Programming of User Signature Disabled 00h: Programming of User Signature Enabled
0BH	Tristate Ports	FFh: I/O Ports start in input-only mode (tristated) after reset 00h: I/O Ports start in quasi-bidirectional mode after reset
0CH	Reserved	
0D – 0EH	Low Power Mode – LPM[0:1]	Selects source for the system clock when using OSCA: LPM1 LPM0 Power Mode FFh FFh Low Power Mode FFh 00h Normal Mode 00h FFh Extra Low Power Mode (Fosc ≤ 1 MHz) 00h 00h Normal Mode
0FH	R1 Enable	FFh: 5 MΩ resistor on XTAL1A Disabled 00h: 5 MΩ resistor on XTAL1A Enabled
10H	Oscillator Select	00h: Boot from Oscillator B (AT89LP51IC2 Only) FFh: Boot from Oscillator A
11 – 12h	Clock Source B – CSB[0:1][(2)]	Selects source for the system clock when using OSCB (AT89LP51IC2 Only): CSB1 CSB0 Selected Source FFh FFh Low Frequency Crystal Oscillator on XTAL1B/XTAL2B (XTAL) FFh 00h Low Frequency Crystal Oscillator on XTAL1B/XTAL2B (XTAL) 00h FFh External Clock on XTAL1B (XCLK) 00h 00h Internal 8 MHz RC Oscillator (IRC)

Notes: 1. The default state from the factory for all fuses is FFh, except for the Bootloader Jump Bit, which is 00H.
2. Changes to these fuses will only take effect after a device POR.
3. Changes to these fuses will only take effect after the ISP session terminates by bringing RST inactive.

24.3 Flash Hardware Security

The AT89LP51RB2/RC2/IC2 provides three Hardware Security Bits (or Lock Bits) for Flash Code Memory security. Security bits can be left unprogrammed (FFh) or programmed (00h) to obtain the protection levels listed in Table 24-6. Security bits can only be erased (set to FFh) by Chip Erase. Lock bit mode 2 disables programming of all memory spaces, including the User Signature Array and User Configuration Fuses. User fuses must be programmed before enabling Lock bit mode 2 or 3. Lock bit mode 3 implements mode 2 and also blocks reads from the code and data memories; however, reads of the User Signature Array, Atmel Signature Array, and User Configuration Fuses are still allowed.

The Hardware Security bits only restrict the access of the SPI-based ISP interface. The Hardware Security Bits will not disable the Bootloader or any programming initiated by the application software using IAP.

Table 24-6. Security Protection Modes

Program Lock Bits (by address)				
Mode	**00h**	**01h**	**02h**	**Protection Mode**
1	FFh	FFh	FFh	No program lock features
2	00h	FFh	FFh	Further programming of the Flash is disabled
3	00h	00h	FFh	Further programming of the Flash is disabled and verify (read) is also disabled
4	00h	00h	00h	Further programming of the Flash is disabled and verify (read) is also disabled; External execution above 32K when BMS = 1 is disabled

24.4 In-Application Programming (IAP)

The AT89LP51RB2/RC2/IC2 supports In-Application Programming (IAP), allowing the program memory to be modified during execution. IAP can be used to modify the user application on the fly or to use program memory for nonvolatile data storage. The AT89LP51RB2/RC2/IC2 includes a Flash Application Programming Interface (API) as part of the bootloader ROM code. The Flash API is the preferred way to program the Flash memory from the application code. Advanced users looking to write their own low-level routines should refer to Section 24.4.2 on page 192.

24.4.1 API Call Description

The In-Application Programming (IAP) feature allows reprogramming a microcontroller on-chip Flash memory without removing it from the system and while the embedded application is running. The user application can call Flash Application Programming Interface (API) routines allowing IAP. These Flash API are also executed by the bootloader.

To call the corresponding API, the user may use a set of routines which can be linked with the application. Example of Flash_api routines are available on the Atmel web site on the software application note:

C Flash Drivers for the AT89C51RD2/ED2

The API calls description and arguments are shown in Table 24-7.

The application selects an API by setting R1, ACC, DPTR0 and DPTR1 registers. All calls are made through a common interface “USER_CALL” at the address FFF0h. The jump to the USER_CALL must be done by an LCALL instruction in order to be able to return to the application. Before jumping to USER_CALL, the bit ENBOOT in AUXR1 register must be set to map the ROM code into the address space.

Flash API calls have the following constraints:

- The interrupts are not disabled by the bootloader. Interrupts must be disabled by the user prior to calling USER_CALL, then re-enabled when returning.
- The user must feed the hardware watchdog before launching a Flash operation.
- The API call requires a minimum of two free stack bytes

Table 24-7. API Call Summary

Command	R1	A	DPTR0	DPTR1	Returned Value	Command Effect
READ MANUF ID	00h	XXh	0000h	XXh	ACC = Manufacturer Id	Read Manufacturer identifier
READ DEVICE ID1	00h	XXh	0001h	XXh	ACC = Device Id 1	Read Device identifier 1
READ DEVICE ID2	00h	XXh	0002h	XXh	ACC = Device Id 2	Read Device identifier 2
READ DEVICE ID3	00h	XXh	0003h	XXh	ACC = Device Id 3	Read Device identifier 3
ERASE BLOCK	01h	XXh	DPH = 00h	00h	ACC = DPH	Erase block 0
			DPH = 20h			Erase block 1
			DPH = 40h			Erase block 2
			DPH = 80h			Erase block 3
			DPH = C0h			Erase block 4
PROGRAM DATA BYTE	02h	Value to write	Address of byte to program	XXh	ACC = 0: DONE	Program up one data byte in the on-chip flash memory.
PROGRAM SSB	05h	XXh	0000h	00h	ACC = SSB value	Set SSB level 1
			0001h			Set SSB level 2
			0010h			Set SSB level 0
			0011h			Set SSB level 1
PROGRAM BSB	06h	New BSB value	0000h	XXh	none	Program boot status byte
PROGRAM SBV	06h	New SBV value	0001h	XXh	none	Program software boot vector
READ SSB	07h	XXh	0000h	XXh	ACC = SSB	Read Software Security Byte
READ BSB	07h	XXh	0001h	XXh	ACC = BSB	Read Boot Status Byte
READ SBV	07h	XXh	0002h	XXh	ACC = SBV	Read Software Boot Vector
PROGRAM DATA PAGE	09h	Number of byte to program	Address of the first byte to program in the Flash memory	Address in XRAM of the first data to program	ACC = 0: DONE	Program up to 128 bytes in user Flash. Remark: number of bytes to program is limited such as the Flash write remains in a single 128 bytes page. Hence, when ACC is 128, valid values of DPL are 00h, or, 80h.
PROGRAM X2 FUSE	0Ah	Fuse value 00h or 01h	0008h	XXh	none	Program X2 fuse bit with ACC
PROGRAM BLJB FUSE	0Ah	Fuse value 00h or 01h	0004h	XXh	none	Program BLJB fuse bit with ACC
READ HSB	0Bh	XXh	XXXXh	XXh	ACC = HSB	Read Hardware Byte
READ BOOT ID1	0Eh	XXh	DPL = 00h	XXh	ACC = ID1	Read boot ID1
READ BOOT ID2	0Eh	XXh	DPL = 01h	XXh	ACC = ID2	Read boot ID2
READ BOOT VERSION	0Fh	XXh	XXXXh	XXh	ACC = Boot_Version	Read bootloader version

24.4.2 Low-Level Interface

The CPU interfaces to the Flash memory through the FCON register (Table 24-10) and EECON register (Table 24-11 on page 198). These registers are used to:

- Map the memory spaces in the addressable space
- Launch the programming of the memory spaces
- Get the status of the Flash memory (busy/not busy)

CAUTION: The incorrect usage of these functions can make the system unstable or inoperable.

For internal execution from user space the AT89LP51RB2/RC2/IC2 uses an *idle-while-write* architecture where the CPU is placed in an idle state while programming occurs. When the write completes, the CPU will continue executing with the instruction after the instruction that started the write sequence (usually a MOV to FCON). All peripherals will continue to function during the write cycle; however, interrupts will not be serviced until the write completes.

For external execution from user space the AT89LP51RB2/RC2/IC2 uses an *execute-while-write* architecture where the CPU continues to operate while the programming occurs. The software should poll the state of the FBUSY flag to determine when the write completes. Interrupts must be disabled during the write sequence as the CPU will not be able to vector to the internal interrupt table and care should be taken that the application does not jump to an internal address until the programming completes.

The Flash API routines in the Boot ROM also use e*xecute-while-write.* Interrupts must be disabled before calling the routines to prevent the CPU from vectoring to a non-ROM address before the programming completes.

Flash memory uses a page-based programming model. Flash data memory differs from traditional EEPROM data memory in the method of writing data. EEPROM generally can update a single byte with any value. Flash memory splits programming into write and erase operations. A Flash write can only program zeroes, i.e change ones into zeroes ($1 \rightarrow 0$). Any ones in the write data are ignored. A Flash erase sets an entire page of data to ones so that all bytes become FFH. Therefore after an erase, each byte in the page can only be written once with any possible value. Bytes can be overwritten without an erase as long as only ones are changed into zeroes. However, if even a single bit needs updating from zero to one ($0 \rightarrow 1$); then the contents of the page must first be saved, the entire page must be erased and the zero bits in all bytes (old and new data combined) must be written. Avoiding unnecessary page erases greatly improves the endurance of the memory.

24.4.2.1 Mapping of the Memory Space

By default, the user application space of the Flash Code memory is accessed read-only by the MOVC instruction. The Flash temporary page buffer is made accessible (write-only) by setting the FPS bit in FCON register. Writing is possible from 0000H to FFFFF, address bits 6 to 0 are used to select an address within a page while bits 15 to 7 are used to select the programming address of the page. Setting FPS takes precedence over the EXTRAM bit in AUXR.

The other memory spaces (User and Atmel Signatures, User Fuses, Hardware Security) are made accessible in the code segment by programming bits FMOD0 and FMOD1 in FCON register in accordance with Table 24-8. A MOVC instruction can then be used for reading these spaces.

Table 24-8. Memory Selection

FMOD1	FMOD0	Addressable space
0	0	User Application (0000–FFFFH)
0	1	User Signature (0000–01FFH)
		Atmel Signature (0200–027FH read-only)
1	0	User Fuses (0000–007FH)
		Hardware Security Bits (0080–00FFH read-only)
1	1	Reserved

24.4.2.2 *Launching Programming*

The FPL bits in the FCON register are used to secure the launch of programming. A specific sequence must be written in these bits to unlock the write protection and to launch the programming. This sequence is 5xH followed by AxH. Table 24-9 summarizes the programming of the memory spaces according to the FMOD bits.

Table 24-9. Programming Sequences

Memory	Write to FCON				Operation
	FPL_{3-0}	FPS	FMOD1	FMOD0	
User Application (CODE)	5	X	0	0	No action
	A	X	0	0	Write the page buffer to user space (0000–FFFFH)
User Signature	5	X	0	1	No action
	A	X	0	1	Write the page buffer to User Signature space (0000–01FFH)
User Fuses	5	X	1	0	No action
	A	X	1	0	Write the page buffer to User Fuse space (0000–007FH)
Reserved	5	X	1	1	No action
	A	X	1	1	No action

Notes: 1. The sequence 5xH and AxH must be executing without instructions between them otherwise the programming is aborted.

2. Interrupts that may occur during programming time must be disabled to avoid any spurious exit of the programming mode.

24.4.2.3 *Status of the Flash Memory*

The bit FBUSY in FCON register is used to indicate the status of programming. FBUSY is set when programming is in progress and cleared when the programming completes. If programming was interrupted due to a brown-out condition the ERR flag in EECON is set.

24.4.2.4 *Loading the Page Buffer*

The AT89LP51RB2/RC2/IC2 includes a temporary page buffer of 64 bytes, or one half of a page. Because the page buffer is 64 bytes long, the maximum number of bytes written at one time is 64. Therefore, two write cycles are required to fill an entire 128-byte page, one for the low half page (00H–3FH) and one for the high half page (40H–7FH) as shown in Figure 24-2.

Figure 24-2. Page Programming Structure

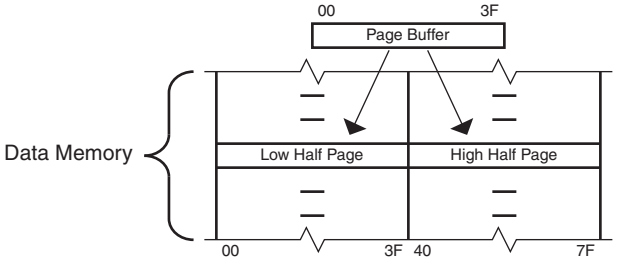

Any number of data bytes from 1 to 64 can be loaded into the temporary page buffer. This provides the capability to program the whole memory by byte, by half-page or by any number of bytes in a half-page. Note that once loaded, a buffer location cannot be reloaded with another value. The page buffer is automatically cleared after each erase/write operation.

By default no erase is performed prior to writing the page buffer contents to the Flash array. Any unloaded locations remain unchanged. Any zeroes in the loaded locations will be written to the desired page. The auto-erase bit AERS (EECON.6) can be set to one to perform a page erase automatically at the beginning of any write sequence. The page erase will erase the entire page, i.e. both the low and high half pages. However, the write operation paired with the auto-erase can only program one of the half pages. A second write cycle without auto-erase is required to update the other half page. When AERS = 1 any unloaded locations will be left blank (FFH) after the operation completes.

The following procedure is used to load the page buffer and is summarized in Figure 24-3:

1. Save then disable interrupts (EA = 0)
2. Map the page buffer space by setting FPS = 1
3. Load the DPTR (or /DPTR) with the address to load
4. Load Accumulator register with the data to load
5. Execute the MOVX @DPTR, A instruction (or MOVX @/DPTR, A instruction)
6. If needed loop the steps 3—5 until the page buffer is completely loaded
7. Unmap the page buffer (FPS = 0) and restore interrupts (EA = 1)

24.4.2.5 Programming the Flash Code Space

The following procedure is used to program the User code space and is summarized in Figure 24-4:

1. Load up to one half-page of data in the page buffer from address 0000H to FFFFH
2. Save then disable the interrupts (EA = 0)
3. Launch the programming by writing the data sequence 50H followed by A0H to FCON register
4. If launched from internal memory, the CPU idles until programming completes. If launched from external memory, poll the FBUSY flag until it is cleared
5. Restore the interrupts (EA = 1)

Figure 24-3. Flash Page Buffer Loading Procedure

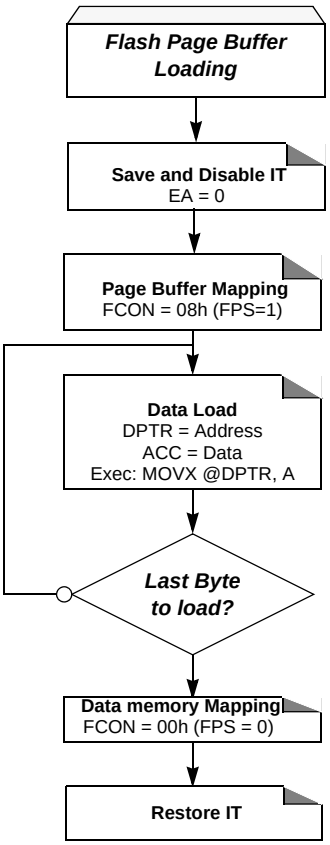

Note: The last page address used when loading the page buffer is the one used to select the page programming address.

24.4.2.6 *Programming the User Signature Space*

The following procedure is used to program the User Signature space and is summarized in Figure 24-4:

1. Load up to one half-page of data in the page buffer from address 0000H to 01FFH
2. Save then disable the interrupts (EA = 0)
3. Launch the programming by writing the data sequence 52H followed by A2H to FCON register.
4. If launched from internal memory, the CPU idles until programming completes. If launched from external memory, poll the FBUSY flag until it is cleared
5. Restore the interrupts (EA = 1)

Figure 24-4. Flash Programming Procedure

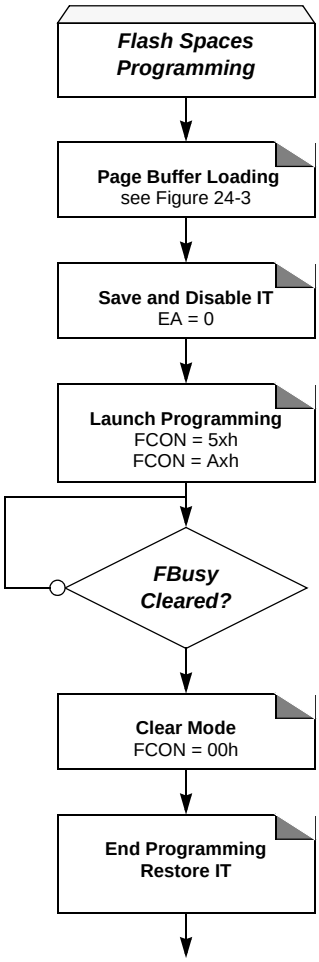

24.4.2.7 *Programming the User Fuse Space*

The following procedure is used to program the User Fuse space and is summarized in Figure 24-4:

1. Load up to one half-page of data in the page buffer from address 0000H to 01FFH
2. Save then disable the interrupts (EA = 0)
3. Launch the programming by writing the data sequence 54H followed by A4H to FCON register.
4. If launched from internal memory, the CPU idles until programming completes. If launched from external memory, poll the FBUSY flag until it is cleared
5. Restore the interrupts (EA = 1)

24.4.2.8 *Reading the Flash Code Space*

The following procedure is used to read the User code space:

1. Map the code space by writing 00H to FCON (the default)
2. Read one byte in Accumulator by executing MOVC A,@A+DPTR where A+DPTR is the address of the code byte to read

24.4.2.9 *Reading the User/Atmel Signature*

The following procedure is used to read the User or Atmel Signature space and is summarized in Figure 24-5:

- Map the Signature space by writing 02H to FCON register
- Read one byte in Accumulator by executing MOVC A,@A+DPTR where A+DPTR is 0000–01FFH for the User Signature and 0200–027FH for the Atmel Signature
- Clear FCON to unmap the Signature space

24.4.2.10 *Reading the User Fuses/Hardware Security Bits*

The following procedure is used to read the User Fuses or Hardware Security space and is summarized in Figure 24-5:

- Map the User Fuses/Hardware Security space by writing 04H in FCON register
- Read one byte in Accumulator by executing MOVC A,@A+DPTR where A+DPTR is 0000–007FH for the User Fuses and 0080–00FFH for the Hardware Security
- Clear FCON to unmap the User Fuses/Hardware Security

Figure 24-5. Reading Procedure

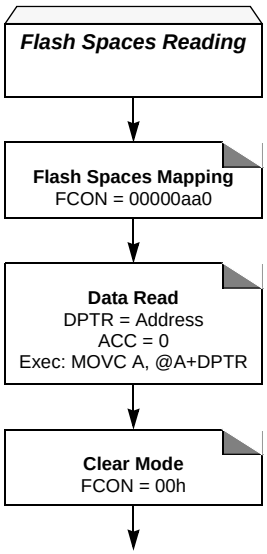

Note: aa = 00B for the User Application Code
aa = 01B for the User/Atmel Signature
aa = 10B for the User Fuses/Hardware Security

Table 24-10. FCON – Flash Control Register

FCON Address = 0D1H — Reset Value = xxxx 000xB

Not Bit Addressable

	FPL3	FPL2	FPL1	FPL0	FPS	FMOD1	FMOD0	FBUSY
Bit	7	6	5	4	3	2	1	0

Symbol	Function
FPL_{3-0}	**Programming Launch Command Bits** Write 5Xh followed by AXh to launch the programming according to $FMOD_{1-0}$.
FPS	**Flash Map Program Space** Set this bit to direct the MOVX @DPTR, A and MOVX @/DPTR, A instructions to the Flash memory temporary page buffer. Clear to allow MOVX to write regular data memory.
$FMOD_{1-0}$	**Flash Mode** **Mode** / **FMOD1** / **FMOD0** / **Memory Operation Target** 0 / 0 / 0 / CODE space (0000–FFFFH) 1 / 0 / 1 / User Signature space (0000–01FFH) Atmel Signature space (0200–027FH read-only) 2 / 1 / 0 / User Fuse space (0000–007FH) Hardware Security space (0080–00FFH read-only) 3 / 1 / 1 / Reserved
FBUSY	**Flash Busy** Set by hardware when programming is in progress. Cleared by hardware when programming is done. Cannot be changed by software.

Table 24-11. EECON – EEPROM Control Register

EECON = D2H — Reset Value = 1000 XXXB

Not Bit Addressable

	FOUT	AERS	LDPG	FLGE	$\overline{INHIBIT}$	ERR	–	–
Bit	7	6	5	4	3	2	1	0

Symbol	Function
FOUT	When FLGE = 1, FOUT is set/cleared by hardware during reads from EDATA in the range of 0780H–07FFH to show the byte flag status of the last location accessed. FOUT = 1 when FLGE = 0.
AERS	Auto-Erase Enable. Set to perform an auto-erase of a Flash memory page during the next write sequence. Clear to perform write without erase. This bit is reserved for the Flash API.
LDPG	Load Page Enable. Set to this bit to load multiple bytes to the temporary page buffer. Byte locations may not be loaded more than once before a write. LDPG must be cleared before writing.
FLGE	Byte Flag Enable. When FLGE = 1, writes to EDATA in the range of 0780H–07FFH will set the byte flag of the location accessed. Reads in the range of 0780H–07FFH will return the byte flag status in FOUT. When FLGE = 0 all byte flags are reset to zero.
$\overline{INHIBIT}$	Write Inhibit Flag. Cleared by hardware when the voltage on VDD has fallen below the minimum programming voltage. Set by hardware when the voltage on VDD is above the minimum programming voltage (after 2 ms delay).
ERR	Error Flag. Set by hardware if an error occurred during the last programming sequence (Flash or EEPROM) due to a brownout condition (low voltage on VDD). Must be cleared by software.

24.5 Bootloader

The Bootloader is a ROM-based application that provides the following features:

- Flash Internal Program Memory
- Boot vector allows user provided Flash loader code to reside anywhere in the Flash memory space. This configuration provides flexibility to the user.
- Default loader in Boot ROM allows programming via the serial port without the need of a user provided loader.
- Programming and erasing voltage with standard power supply
- Read/Programming/Erase:
  - Byte-wise read without wait state
  - Byte or page erase and programming (10 ms)
- Typical programming time (64K bytes) is 22s with on chip serial bootloader
- Programmable security for the code in the Flash
- 100K write cycles
- 10 years data retention

The bootloader manages communication according to a specifically defined protocol to provide the whole access and service on Flash memory. Furthermore, all accesses and routines can be called from the user application.

Figure 24-6. Diagram Context Description

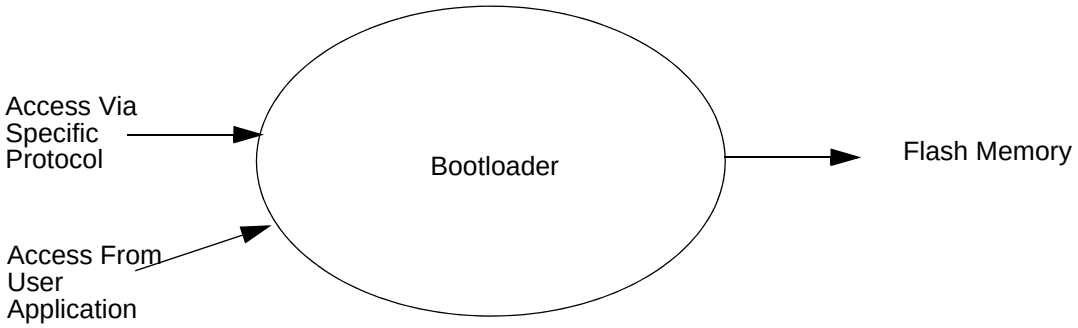

Table 24-12 list some acronyms used by the Bootloader.

Table 24-12. Bootload Definitions

Mnemonic	Definition
BSB	Boot Status Byte
HW/HSB	Hardware Byte/Hardware Security Byte
SBV	Software Boot Vector
SSB	Software Security Byte

On Figure 24-7, the on-chip bootloader processes are:

- **ISP Communication Management**
  The purpose of this process is to manage the communication and its protocol between the on-chip bootloader and a external device. The on-chip ROM implements a serial protocol (see section "Bootloader Protocol Description" on page 205). This process translate serial communication frame (UART) into Flash memory access (read, write, erase, etc.).
- **User Call Management**
  Several Application Program Interface (API) calls are available for use by an application program to permit selective erasing and programming of Flash pages. All calls are made through a common interface (API calls), included in the ROM bootloader. The programming functions are selected by setting up the microcontroller's registers before making a call to a common entry point (0xFFF0). Results are returned in the registers. The purpose on this process is to translate the registers values into internal Flash Memory Management. See "In-Application Programming (IAP)" on page 190
- **Flash Memory Management**
  This process manages low level access to Flash memory (performs read and write access).

Figure 24-7. Bootloader Functional Description

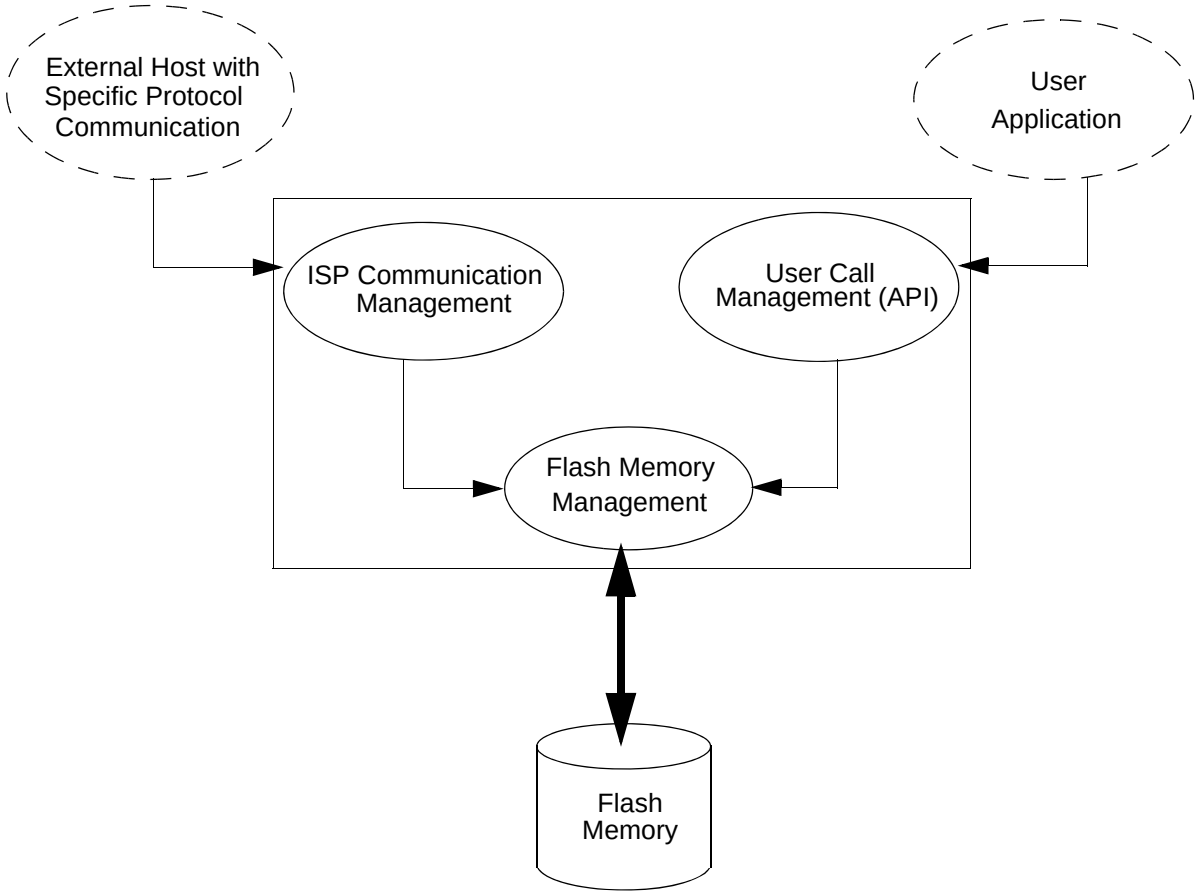

24.5.1 Bootloader Process

The bootloader can be activated by two means: Hardware conditions or regular boot process.

The Hardware condition PSEN = 0 during the deassertion of RST (falling edge for POL = 1, rising edge for POL = 0) forces the on-chip bootloader execution. This allows an application to be built that will normally execute the end user's code but can be manually forced into default Bootloader operation. As PSEN is a an output port in normal operating mode after reset, user application should take care to release PSEN after the validating edge of the reset signal. The hardware condition is sampled at the reset edge, and thus can be released at any time when the reset input is inactive. To ensure correct microcontroller startup, the PSEN pin should not be tied to ground during power-on (See Figure 24-8).

Figure 24-8. Hardware condition typical sequence during power-on (POL = 1)

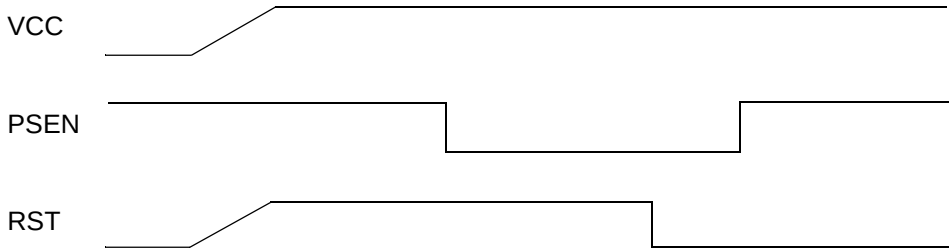

The on-chip bootloader boot process is shown Figure 24-9 on page 203 and described in Table .

Bootloader Process Description

	Purpose
Hardware Condition	The Hardware Condition forces the bootloader execution whatever the BLJB, BSB and SBV values.
BLJB	The Boot Loader Jump Bit forces the application execution. BLJB = 0 => Bootloader execution BLJB = 1 => Application execution The BLJB is a User configuration fuse. It can be modified by hardware (programmer) or by software (API). Note: The BLJB test is performed by hardware to prevent any program execution.
SBV	The Software Boot Vector contains the high address of customer bootloader stored in the application. SBV = FCh (default value) if no customer bootloader in user Flash. Note: The customer bootloader is called by JMP [SBV]00h instruction.

24.5.2 Bootloader Resources

Several on-chip resources are provided for use by the bootloader.

24.5.2.1 Hardware Register

The hardware register of the AT89LP51RB2/RC2/IC2 is called the Hardware Byte or Hardware Security Byte (HSB). It is a shadow of selected resources from the User Fuses and Hardware Security Bits.

Table 24-13. Hardware Security Byte (HSB)

7	6	5	4	3	2	1	0
X2	**BLJB**	**-**	**-**	**XRAM**	**LB2**	**LB1**	**LB0**

Bit Number	Bit Mnemonic	Description
7	X2	**X2 Mode** Programmed (‘0’ value) to force X2 mode after reset. Unprogrammed (‘1’ Value) to force X1 mode after reset (Default).
6	BLJB	**Boot Loader Jump Bit** Unprogrammed (‘1’ value) to start the user’s application on next reset at address 0000h. Programmed (‘0’ value) to start the boot loader at address F800h on next reset (Default).
5	OSC	**Oscillator Bit** Programmed to allow oscillator B at startup Unprogrammed this bit to allow oscillator A at startup (Default).
4	-	**Reserved**
3	XRAM	**XRAM config bit (only programmable by programmer tools)** Programmed to inhibit XRAM. Unprogrammed, this bit to valid XRAM (Default).
2-0	LB2-0	**User Memory Lock Bits (only programmable by programmer tools)** See Table 24-14

Figure 24-9. Bootloader Process

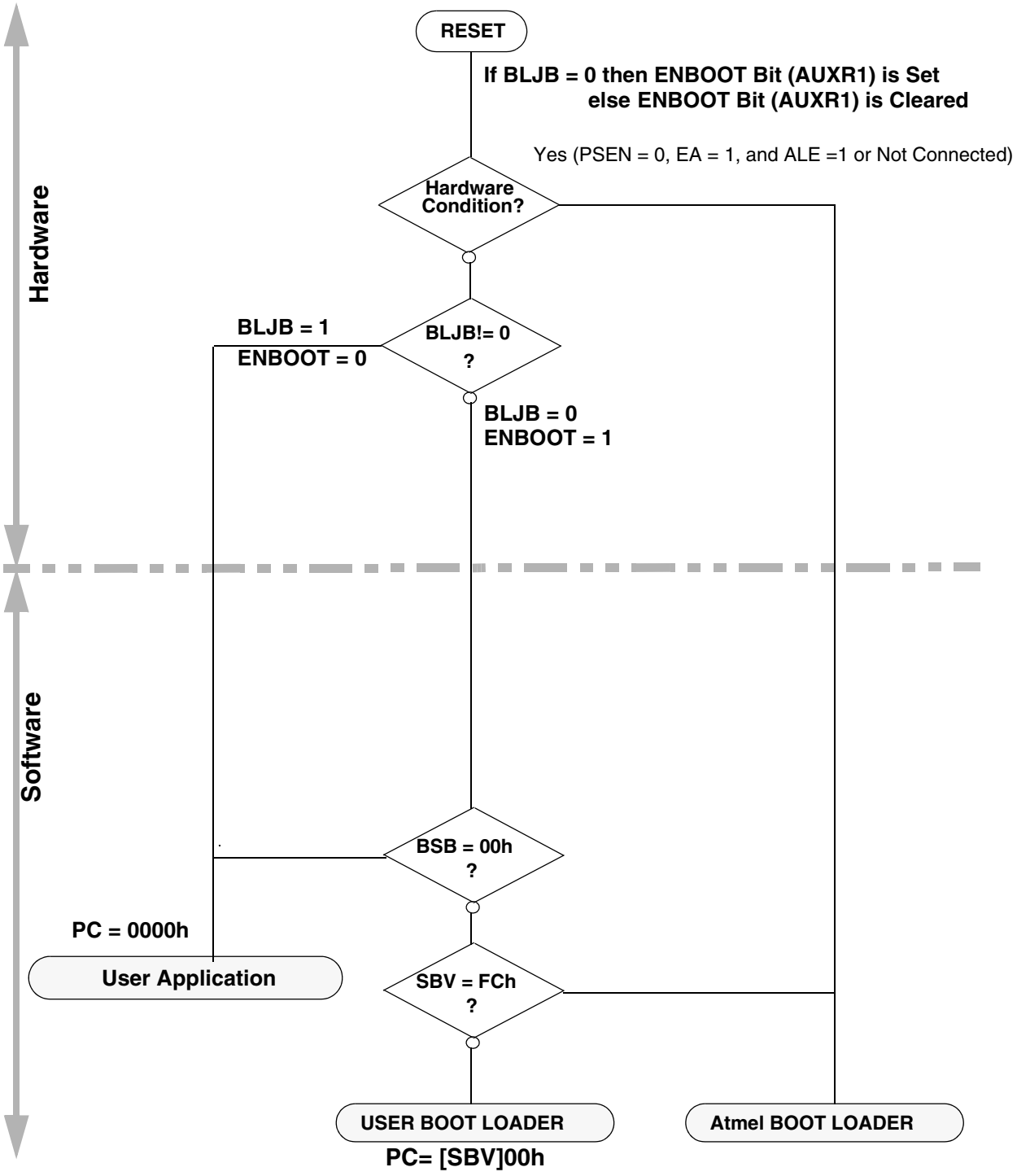

24.5.2.2 Flash Memory Lock Bits

The three lock bits provide different levels of protection for the on-chip code and data when programmed as shown in Table 24-14. These bits in the HSB are copies of the Hardware Security Bits (See Section 24.3 on page 189).

Table 24-14. Program Lock Bits

Program Lock Bits				
Security Level	**LB0**	**LB1**	**LB2**	**Protection Description**
1	U	U	U	No program lock features enabled.
2	P	U	U	MOVC instruction executed from external program memory is disabled from fetching code bytes from internal memory, $\overline{EA}$ is sampled and latched on reset, and further parallel programming of the on chip code memory is disabled. ISP and software programming with API are still allowed.
3	X	P	U	Same as 2, also verify code memory through parallel programming interface is disabled.
4	X	X	P	Same as 3, also external execution is disabled (Default).

Note: U: Unprogrammed or "one" level.
P: Programmed or "zero" level.
X: Do not care
WARNING: Security level 2 and 3 should only be programmed after Flash and code verification.

24.5.2.3 Software Registers

Several registers are used in by the bootloader for the boot process. These registers are in the User Signature part of the Flash memory. They are accessed in the following ways:

- Commands issued by the ISP programmer
- Commands issued by the Bootloader software.
- API calls issued by the application software.

Several software registers are described in Table 24-15.

Table 24-15. Bootloader Software Registers

Mnemonic	Definition	Default value
SBV	Software Boot Vector	FCh
BSB	Boot Status Byte	FFh
SSB	Software Security Byte	FFh

After programming the part by the bootloader, the BSB must be cleared (00h) in order to allow the application to boot at 0000h.

The content of the Software Security Byte (SSB) is described in Table 24-16 and Table 24-17. The SSB protects the Flash memory from programming by the bootloader the same way the Hardware Security bits protect from ISP.

Table 24-16. Software Security Byte

7	6	5	4	3	2	1	0
-	-	-	-	-	-	LB1	LB0

Bit Number	Bit Mnemonic	Description
7	-	**Reserved** Do not clear this bit.
6	-	**Reserved** Do not clear this bit.
5	-	**Reserved** Do not clear this bit.
4	-	**Reserved** Do not clear this bit.
3	-	**Reserved** Do not clear this bit.
2	-	**Reserved** Do not clear this bit.
1-0	LB1-0	User Memory Lock Bits See Table 24-17

The two lock bits provide different levels of protection for the on-chip code and data, when programmed as shown in Table 24-17.

Table 24-17. User Memory Lock Bits of the SSB

Program Lock Bits			
Security Level	**LB0**	**LB1**	**Protection Description**
1	1	1	No program lock features enabled.
2	0	1	Bootloader programming of the Flash is disabled.
3	X	0	Same as 2, also verify through Bootloader programming interface is disabled.

Note: X: Do not care
WARNING: Security level 2 and 3 should only be programmed after Flash verification.

24.5.3 Bootloader Protocol Description

24.5.3.1 Physical Layer

The UART used to transmit information has the following configuration:

- Character: 8-bit data
- Parity: none
- Stop: 2 bits
- Flow control: none
- Baud Rate: autobaud is performed by the bootloader to compute the baud rate chosen by the host.

24.5.3.2 *Frame Description*

The Serial Protocol is based on the Intel Hex-type records.

Intel Hex records consist of ASCII characters used to represent hexadecimal values and are summarized below.

Figure 24-10. Intel Hex Type Frame

Record Mark ':'	Reclen	Load Offset	Record Type	Data or Info	Checksum
1-byte	1-byte	2-bytes	1-byte	n-bytes	1-byte

- Record Mark:
  Record Mark is the start of frame. This field must contain ':'.
- Reclen:
  Reclen specifies the number of bytes of information or data which follows the Record Type field of the record.
- Load Offset:
  Load Offset specifies the 16-bit starting load offset of the data bytes, therefore this field is used only for Data Program Record (see Section "Bootloader Command Summary").
- Record Type:
  Record Type specifies the command type. This field is used to interpret the remaining information within the frame. The encoding for all the current record types is described in Section "Bootloader Command Summary".
- Data/Info:
  Data/Info is a variable length field. It consists of zero or more bytes encoded as pairs of hexadecimal digits. The meaning of data depends on the **Record Type**.
- Checksum:
  The two's complement of the 8-bit bytes that result from converting each pair of ASCII hexadecimal digits to one byte of binary, and including the **Reclen** field to and including the last byte of the **Data/Info** field. Therefore, the sum of all the ASCII pairs in a record after converting to binary, from the **Reclen** field to and including the **Checksum** field, is zero.

24.5.4 Functional Description

24.5.4.1 *Software Security Bits (SSB)*

The SSB protects any Flash access from Bootloader commands. The command "Program Software Security Bit" can only write a higher priority level. There are three levels of security:

- level 0: ***NO_SECURITY*** (FFh)
  This is the default level.From level 0, one can write level 1 or level 2.
- level 1: ***WRITE_SECURITY*** (FEh)
  For this level it is impossible to write in the Flash memory, BSB or SBV. The Bootloader returns 'P' on write access. From level 1, one can write only level 2.
- level 2: ***RD_WR_SECURITY*** (FCh)
  Level 2 forbids all read and write accesses to/from the Flash memory. The Bootloader returns 'L' on read or write access. Only a full chip erase in parallel mode (using a programmer) or ISP command can reset the software security bits. From level 2, one cannot read and write anything.

Table 24-18. Software Security Byte Behavior

	Level 0	Level 1	Level 2
Flash	Any access allowed	Read-only access allowed	Any access not allowed
Fuse Bit	Any access allowed	Read-only access allowed	Any access not allowed
BSB & SBV	Any access allowed	Read-only access allowed	Any access not allowed
SSB	Any access allowed	Write level 2 allowed	Read-only access allowed
Manufacturer Info	Read-only access allowed	Read-only access allowed	Read-only access allowed
Bootloader Info	Read-only access allowed	Read-only access allowed	Read-only access allowed
Erase Block	Allowed	Not allowed	Not allowed
Full Chip Erase	Allowed	Allowed	Allowed
Blank Check	Allowed	Allowed	Allowed

24.5.4.2 Full Chip Erase

The ISP command "Full Chip Erase" erases all user Flash memory (fills with FFh) and sets some bytes used by the bootloader at their default values:

- BSB = FFh
- SBV = FCh
- SSB = FFh

The Full Chip Erase does not affect the bootloader.

24.5.4.3 Checksum Error

When a checksum error is detected, ‘X’ is sent followed with CR&LF.

24.5.5 Flow Description

24.5.5.1 Overview

An initialization step must be performed after each Reset. After microcontroller reset, the bootloader waits for an autobaud sequence (see section “Autobaud Performance”). After the communication is initialized, the protocol depends on the record type requested by the host. FLIP, a software utility to implement bootloader programming with a PC, is available from the Atmel web site.

24.5.5.2 Communication Initialization

The host initializes the communication by sending a ’U’ character to help the bootloader to compute the baud rate (autobaud).

Figure 24-11. Initialization

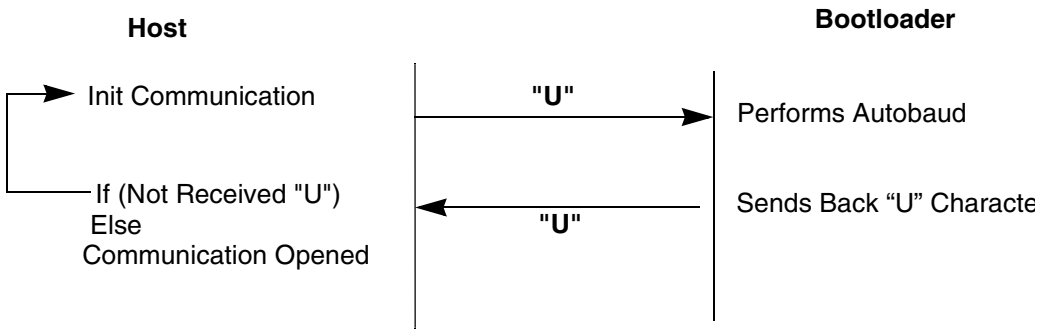

24.5.5.3 Autobaud Performance

The bootloader feature allows a wide range of baud rates in the user application. It is also adaptable to a wide range of oscillator frequencies. This is accomplished by measuring the bit-time of a single bit in a received character. This information is then used to program the baud rate in terms of timer counts based on the oscillator frequency. The bootloader feature requires that an initial character (an uppercase U) be sent to the AT89LP51RB2/RC2/IC2 to establish the baud rate. Table 24-19 shows the autobaud capability.

For AT89LP51IC2 the bootloader always uses OSCA. If the device boots on OSCB, the bootloader will enable and switch to OSCA. In this case both the OSCA and OSCB sources must be operational, i.e. a crystal or external clock source must be connected to the oscillator inputs unless the oscillator source was previously configured as the internal RC oscillator.

Table 24-19. Autobaud Performance

Frequency (MHz) **Baudrate (kHz)**	**1.8432**	**2**	**2.4576**	**3**	**3.6864**	**4**	**5**	**6**	**7.3728**
2400	OK	OK	OK	OK	OK	OK	OK	OK	OK
4800	OK	-	OK	OK	OK	OK	OK	OK	OK
9600	OK	-	OK	OK	OK	OK	OK	OK	OK
19200	OK	-	OK	OK	OK	-	-	OK	OK
38400	-	-	OK		OK	-	OK	OK	OK
57600	-	-	-	-	OK	-	-	-	OK
115200	-	-	-	-	-	-	-	-	OK
Frequency (MHz) **Baudrate (kHz)**	**8**	**10**	**11.0592**	**12**	**14.746**	**16**	**20**	**24**	**26.6**
2400	OK	OK	OK	OK	OK	OK	OK	OK	OK
4800	OK	OK	OK	OK	OK	OK	OK	OK	OK
9600	OK	OK	OK	OK	OK	OK	OK	OK	OK
19200	OK	OK	OK	OK	OK	OK	OK	OK	OK
38400	-	-	OK	OK	OK	OK	OK	OK	OK
57600	-	-	OK	-	OK	OK	OK	OK	OK
115200	-	-	OK	-	OK	-	-	-	-

24.5.5.4 *Command Data Stream Protocol*

All commands are sent using the same flow. Each frame sent by the host is echoed by the bootloader.

Figure 24-12. Command Flow

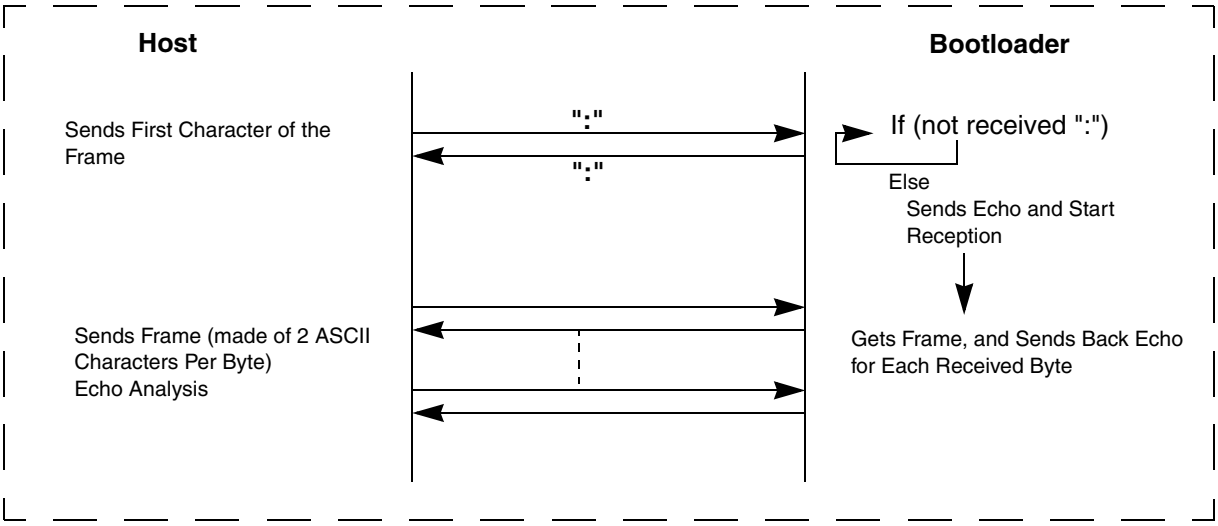

24.5.6 Write/Program Commands Description

This flow is common to the following frames:

- Flash Programming Data Frame
- EOF or Atmel Frame (only Programming Atmel Frame)
- Config Byte Programming Data Frame
- Baud Rate Frame

Figure 24-13. Write/Program Flow

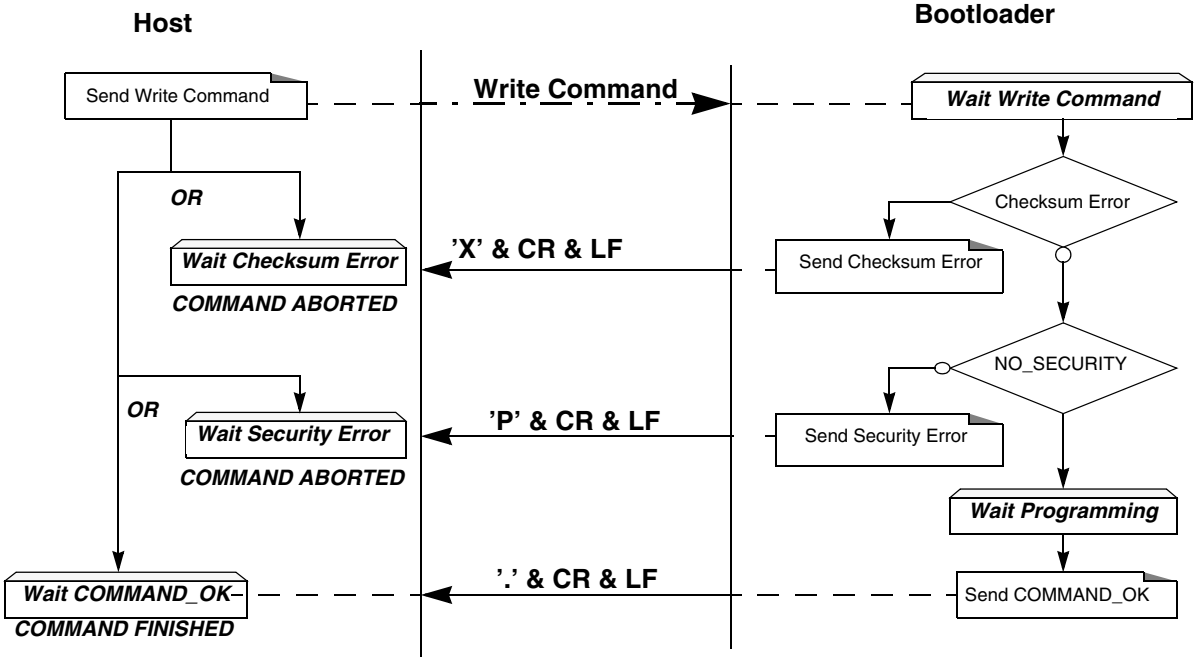

Example:

Programming Data (write 55h at address 0010h in the Flash)

```
HOST          : 01 0010 00 55 9A
BOOTLOADER    : 01 0010 00 55 9A . CR LF
```

Programming Atmel function (write SSB to level 2)

```
HOST          : 02 0000 03 05 01 F5
BOOTLOADER    : 02 0000 03 05 01 F5. CR LF
```

Writing Frame (write BSB to 55h)

```
HOST          : 03 0000 03 06 00 55 9F
BOOTLOADER    : 03 0000 03 06 00 55 9F . CR LF
```

24.5.7 Blank Check Command Description

Figure 24-14. Blank Check Flow

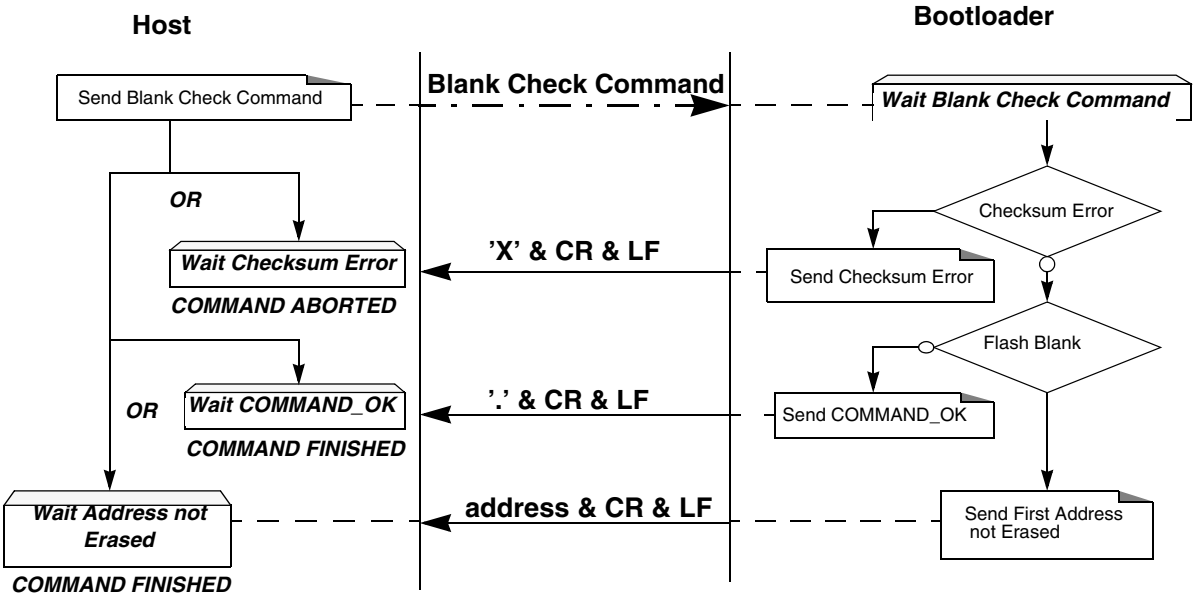

Example:

Blank Check ok

```
HOST          : 05 0000 04 0000 7FFF 01 78
BOOTLOADER    : 05 0000 04 0000 7FFF 01 78 . CR LF
```

Blank Check ok at address xxxx

```
HOST          : 05 0000 04 0000 7FFF 01 78
BOOTLOADER    : 05 0000 04 0000 7FFF 01 78 xxxx CR LF
```

Blank Check with checksum error

```
HOST          : 05 0000 04 0000 7FFF 01 70
BOOTLOADER    : 05 0000 04 0000 7FFF 01 70 X CR LF CR LF
```

24.5.8 Display Data Description

Figure 24-15. Display Flow

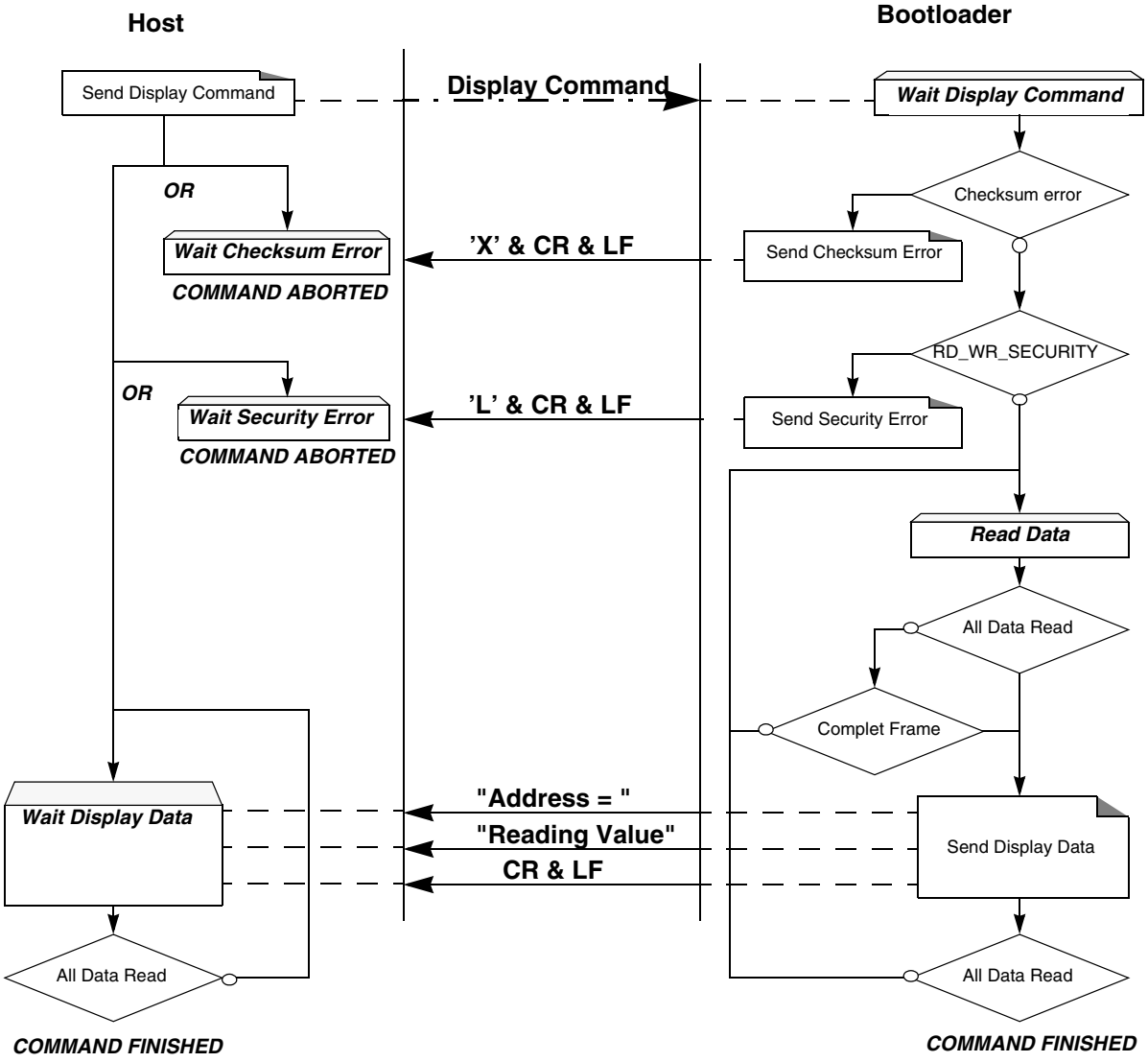

Example:

Display data from address 0000h to 0020h

HOST	: 05 0000 04 0000 0020 00 D7
BOOTLOADER	: 05 0000 04 0000 0020 00 D7 CR LF
BOOTLOADER	0000=-----data------ CR LF (16 data)
BOOTLOADER	0010=-----data------ CR LF (16 data)
BOOTLOADER	0020=data CR LF (1 data)

24.5.9 Read Function Description

This flow is similar for the following frames:

- Reading Frame
- EOF Frame/ Atmel Frame (only reading Atmel Frame)

Figure 24-16. Read Flow

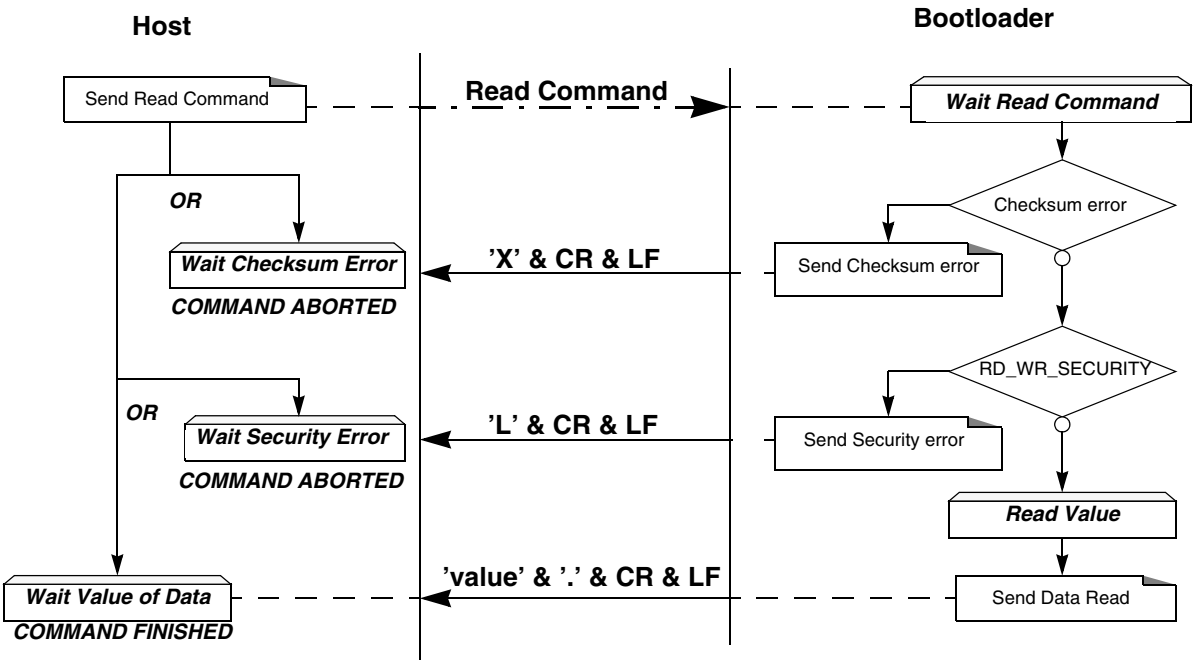

Example:

Read function (read SBV)

HOST : 02 0000 05 07 02 F0

BOOTLOADER : 02 0000 05 07 02 F0 Value . CR LF

Atmel Read function (read Bootloader version)

HOST : 02 0000 01 02 00 FB

BOOTLOADER : 02 0000 01 02 00 FB Value . CR LF

24.5.10 Bootloader Command Summary

Table 24-20. Bootloader Command Summary

Command	Command Name	Data[0]	Data[1]	Command Effect
00h	Program Code			Program Nb Code Byte. Bootloader will accept up to 128 (80h) data bytes. The data bytes should be 128 byte page flash boundary.
03h	Write Function	01h	00h	Erase block0 (0000h-1FFFh)
			20h	Erase block1 (2000h-3FFFh)
			40h	Erase block2 (4000h-7FFFh)
			80h	Erase block3 (8000h- BFFFh)
			C0h	Erase block4 (C000h- FFFFh)
		03h	00h	Hardware Reset
		04h	00h	Erase SBV & BSB
		05h	00h	Program SSB level 1
			01h	Program SSB level 2
		06h	00h	Program BSB (value to write in data[2])
			01h	Program SBV (value to write in data[2])
		07h	-	Full Chip Erase (This command needs about 6 sec to be executed)
		0Ah	10h[1]	Program OSC fuse (value to write in data[2])
			04h	Program BLJB fuse (value to write in data[2])
			08h	Program X2 fuse (value to write in data[2])
04h	Display Function	Data[0:1] = start address Data [2:3] = end address Data[4] = 00h:Display Code Data[4] = 01h: Blank check		Display Code
				Blank Check
05h	Read Function	00h	00h	Manufacturer Id
			01h	Device Id #1
			02h	Device Id #2
			03h	Device Id #3
		07h	00h	Read SSB
			01h	Read BSB
			02h	Read SBV
			06h	Read Extra Byte
		0Bh	00h	Read Hardware Byte
		0Eh	00h	Read Device Boot ID1
			01h	Read Device Boot ID2
		0Fh	00h	Read Bootloader Version

Note: 1. AT89C51IC2 Only. This byte differs from AT89C51IC2, which uses 02h

24.6 In-System Programming (ISP)

The Atmel AT89LP51RB2/RC2/IC2 microcontroller features 64K bytes of on-chip In-System Programmable Flash program memory and 4K bytes of nonvolatile EPROM data memory. In-System Programming allows programming and reprogramming of the microcontroller positioned inside the end system. Using a simple 4-wire SPI interface, the programmer communicates serially with the AT89LP51RB2/RC2/IC2 microcontroller, reprogramming all nonvolatile memories on the chip. In-System Programming eliminates the need for physical removal of the chips from the system. This will save time and money, both during development in the lab, and when updating the software or parameters in the field. The programming interface of the AT89LP51RB2/RC2/IC2 includes the following features:

- Four-wire serial SPI Programming Interface or 12-pin Parallel Interface
- Selectable Polarity Reset Entry into Programming
- User Signature Array
- Flexible Page Programming
- Row Erase Capability
- Page Write with Auto-Erase Commands
- Programming Status Register

For more detailed information on In-System Programming, refer to the Application Note entitled “AT89LP In-System Programming Specification”.

24.6.1 Physical Interface

The AT89LP51RB2/RC2/IC2 provides a standard programming command set with two physical interfaces: a bit-serial and a byte-parallel interface. Normal Flash programming utilizes the Serial Peripheral Interface (SPI) pins of an AT89LP51RB2/RC2/IC2 microcontroller. The SPI is a full-duplex synchronous serial interface consisting of four wires: Serial Clock (SCK), Master-In/Slave-out (MISO), Master-out/Slave-in (MOSI) and Slave Select ($\overline{SS}$). When programming an AT89LP51RB2/RC2/IC2 device, the programmer always operates as the SPI master, and the target system always operates as the SPI slave. To enter or remain in Programming mode the device’s reset line (RST) must be held active. With the addition of VDD and GND, an AT89LP51RB2/RC2/IC2 microcontroller can be programmed with a minimum of eight connections as shown in Figure 24-17.

Figure 24-17. In-System Programming Device Connections

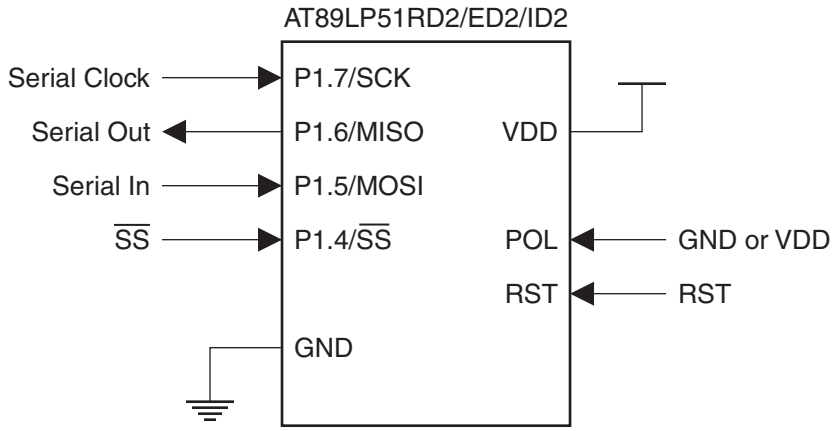

The Parallel interface is a special mode of the serial interface, i.e. the serial interface is used to enable the parallel interface. After enabling the interface serially over P1.7/SCK and P1.5/MOSI, P1.5 is reconfigured as an active-low output enable ($\overline{OE}$) for data on Port 0. When $\overline{OE}$ = 1, command, address and write data bytes are input on Port 0 and sampled at the rising edge of SCK. When $\overline{OE}$ = 0, read data bytes are output on Port 0 and should be sampled on the falling edge of SCK. The P1.7/SCK and RST pins continue to function in the same manner. With the addition of VDD and GND, the parallel interface requires a minimum of fourteen connections as shown in Figure 24-18. Note that a connection to P1.6/MISO is not required for using the parallel interface.

Figure 24-18. Parallel Programming Device Connections

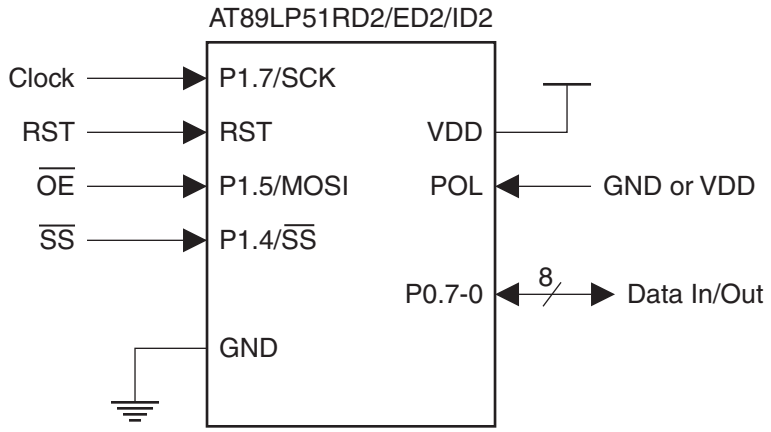

The Programming Interface is a means of externally programming the AT89LP51RB2/RC2/IC2 microcontroller. The Interface can be used to program the device both in-system and in a standalone serial programmer. The Interface does not require any clock other than SCK and is not limited by the system clock frequency. During Programming the system clock source of the target device can operate normally.

When designing a system where In-System Programming will be used, the following observations must be considered for correct operation:

- The ISP interface uses the SPI clock mode 0 (CPOL = 0, CPHA = 0) exclusively with a maximum frequency of 5 MHz.
- The AT89LP51RB2/RC2/IC2 will enter programming mode only when its reset line (RST) is active. To simplify this operation, it is recommended that the target reset can be controlled by the In-System programmer. To avoid problems, the In-System programmer should be able to keep the entire target system reset for the duration of the programming cycle. The target system should never attempt to drive the three SPI lines while reset is active.
- The ISP Enable Fuse must be set to allow programming during any reset period. If the ISP Fuse is disabled, ISP may only be entered at POR. To enter programming the RST pin must be driven active prior to the end of Power-On Reset (POR). After POR has completed the device will remain in ISP mode until RST is brought inactive. Once the initial ISP session has ended, the power to the target device must be cycled OFF and ON to enter another session. Note that if this method is required, an active-low reset polarity is recommended.
- For standalone programmers, an active-low reset polarity is recommended (POL = 0). RST may then be tied directly to GND to ensure correct entry into Programming mode regardless of the device settings.

24.6.2 Command Format

Programming commands consist of two preamble bytes, an opcode byte, two address bytes, and zero or more data bytes. Figure 24-19 on page 216 shows a simplified flow chart of a command sequence.

A sample command packet is shown in Figure 24-20 on page 217. The $\overline{SS}$ pin defines the packet frame. $\overline{SS}$ must be brought low before the first byte in a command is sent and brought back high after the final byte in the command has been sent. The command is not complete until $\overline{SS}$ returns high. Command bytes are issued serially on MOSI. Data output bytes are received serially on MISO. Packets of variable length are supported by returning $\overline{SS}$ high when the final required byte has been transmitted. In some cases command bytes have a don't care value. Don't care bytes in the middle of a packet must be transmitted. Don't care bytes at the end of a packet may be ignored.

Page oriented instructions always include a full 16-bit address. The higher order bits select the page and the lower order bits select the byte within that page. The AT89LP51RB2/RC2/IC2 allocates 6 bits for byte address, 1 bit for low/high half page selection and 9 bits for page address. The half page to be accessed is always fixed by the page address and half select as transmitted. The byte address specifies the starting address for the first data byte. After each data byte has been transmitted, the byte address is incremented to point to the next data byte. This allows a page command to linearly sweep the bytes within a page. If the byte address is incremented past the last byte in the half page, the byte address will roll over to the first byte in the same half page. While loading bytes into the page buffer, overwriting previously loaded bytes will result in data corruption.

For a summary of available commands, see Table 24-21 on page 218.

Figure 24-19. Command Sequence Flow Chart

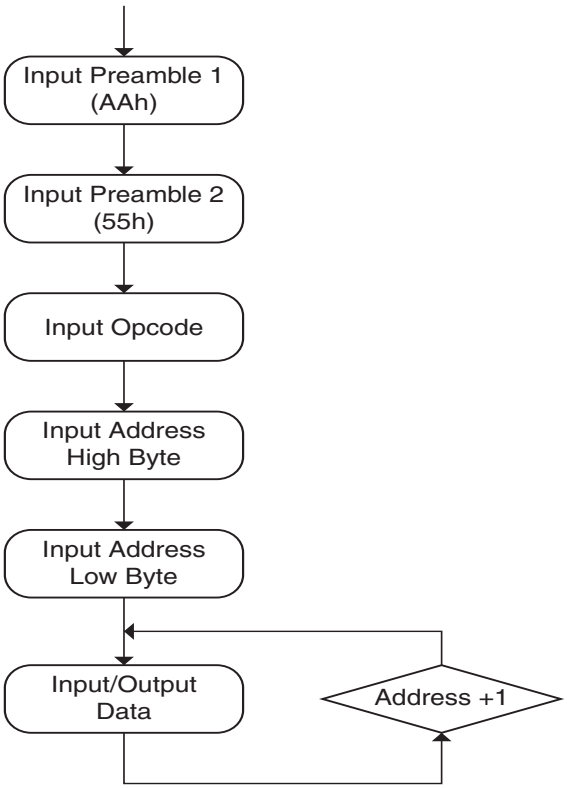

Figure 24-20. ISP Command Packet (Serial)

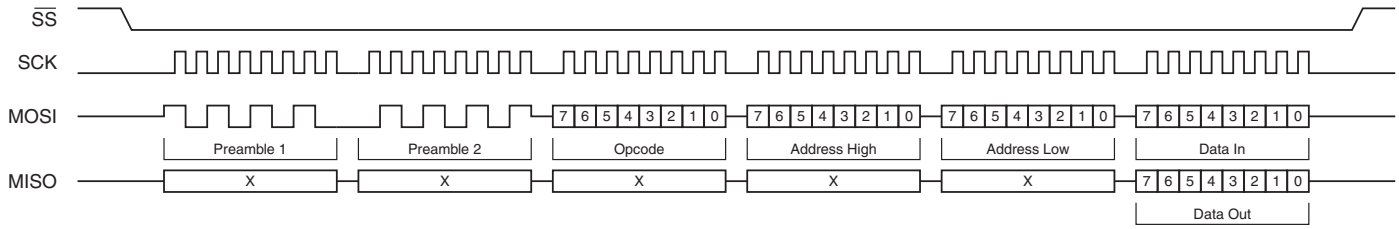

Figure 24-21. ISP Command Packet (Parallel)

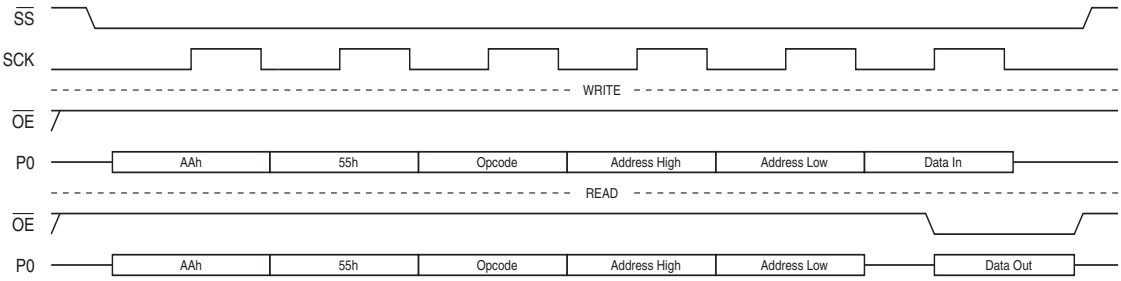

Table 24-21. Programming Command Summary

Command	Opcode	Addr High	Addr Low	Data 0	Data n
Program Enable[1]	1010 1100	0101 0011	–	–	–
Parallel Enable[2]	1010 1100	0011 0101	–	–	–
Chip Erase	1000 1010	–	–	–	–
Read Status	0110 0000	xxxx xxxx	xxxx xxxx	Status Out	
Load Page Buffer[3]	0101 0001	xxxx xxxx	00bb bbbb	Data In 0 ... Data In n	
Write Code Page[3]	0101 0000	aaaa aaaa	asbb bbbb	Data In 0 ... Data In n	
Write Code Page with Auto-Erase[3]	0111 0000	aaaa aaaa	asbb bbbb	Data In 0 ... Data In n	
Read Code Page[3]	0011 0000	aaaa aaaa	asbb bbbb	Data Out 0 ... Data Out n	
Write Data Page[3]	1101 0000	000a aaaa	asbb bbbb	Data In 0 ... Data In n	
Write Data Page with Auto-Erase[3]	1101 0010	000a aaaa	asbb bbbb	Data In 0 ... Data In n	
Read Data Page[3]	1011 0000	000a aaaa	asbb bbbb	Data Out 0 ... Data Out n	
Write User Fuses[3][4][5]	1110 0001	0000 0000	00bb bbbb	Data In 0 ... Data In n	
Write User Fuses with Auto-Erase[3][4][5]	1111 0001	0000 0000	00bb bbbb	Data In 0 ... Data In n	
Read User Fuses[3][4][5]	0110 0001	0000 0000	00bb bbbb	Data Out 0 ... Data Out n	
Write Lock Bits[3][4][6]	1110 0100	0000 0000	00bb bbbb	Data In 0 ... Data In n	
Read Lock Bits[3][4][6]	0110 0100	0000 0000	00bb bbbb	Data Out 0 ... Data Out n	
Write User Signature Page[3]	0101 0010	0000 0000	asbb bbbb	Data In 0 ... Data In n	
Write User Signature Page with Auto-Erase[3]	0111 0010	0000 0000	asbb bbbb	Data In 0 ... Data In n	
Read User Signature Page[3]	0011 0010	0000 0000	asbb bbbb	Data Out 0 ... Data Out n	
Read Atmel Signature Page[3]	0011 1000	0000 0000	0sbb bbbb	Data Out 0 ... Data Out n	

Notes:
1. Program Enable must be the **first** command issued after entering into programming mode.
2. Parallel Enable switches the interface from serial to parallel format until $\overline{RST}$ returns high.
3. Any number of Data bytes from 1 to 64 may be written/read. The internal address is incremented between each byte.
4. Each byte address selects one fuse or lock bit. Data bytes must be 00h or FFh.
5. See Table 24-5 on page 188 for Fuse definitions.
6. See Table 24-6 on page 190 for Lock Bit definitions.
7. **Symbol Key**:

   a: Page Address Bit

   s: Half Page Select Bit

   b: Byte Address Bit

   x: Don't Care Bit

24.6.3 Status Register

The current state of the memory may be accessed by reading the status register. The status register is shown in Table 24-22.

Table 24-22. Status Register

	–	–	–	–	$\overline{\text{LOAD}}$	SUCCESS	$\overline{\text{WRTINH}}$	$\overline{\text{BUSY}}$
Bit	7	6	5	4	3	2	1	0

Symbol	Function
$\overline{\text{LOAD}}$	Load flag. Cleared low by the load page buffer command and set high by the next memory write. This flag signals that the page buffer was previously loaded with data by the load page buffer command.
SUCCESS	Success flag. Cleared low at the start of a programming cycle and will only be set high if the programming cycle completes without interruption from the brownout detector.
$\overline{\text{WRTINH}}$	Write Inhibit flag. Cleared low by the brownout detector (BOD) whenever programming is inhibited due to V_{DD} falling below the minimum required programming voltage. If a BOD episode occurs during programming, the SUCCESS flag will remain low after the cycle is complete.
$\overline{\text{BUSY}}$	Busy flag. Cleared low whenever the memory is busy programming or if write is currently inhibited.

24.6.4 $\overline{\text{DATA}}$ Polling

The AT89LP51RB2/RC2/IC2 implements $\overline{\text{DATA}}$ polling to indicate the end of a programming cycle. While the device is busy, any attempted read of the last byte written will return the data byte with the MSB complemented. Once the programming cycle has completed, the true value will be accessible. During Erase the data is assumed to be FFH and $\overline{\text{DATA}}$ polling will return 7FH. When writing multiple bytes in a page, the $\overline{\text{DATA}}$ value will be the last data byte loaded before programming begins, not the written byte with the highest physical address within the page.

24.6.5 Programming Interface Timing

This section details general system timing sequences and constraints for entering or exiting In-System Programming as well as parameters related to the Serial Peripheral Interface during ISP. The general timing parameters for the following waveform figures are listed in section "Timing Parameters" on page 222.

24.6.5.1 Power-up Sequence

Execute this sequence to enter programming mode immediately after power-up. In the RST pin is disabled or if the ISP Fuse is disabled, this is the only method to enter programming (see "External Reset" on page 53).

1. Apply power between VDD and GND pins. RST should remain low.
2. Wait at least t_{PWRUP} and drive RST high if active-high otherwise keep low.
3. Wait at least t_{SUT} for the internal Power-on Reset to complete. The value of t_{SUT} will depend on the current settings of the device.
4. Start programming session.

Figure 24-22. Serial Programming Power-up Sequence

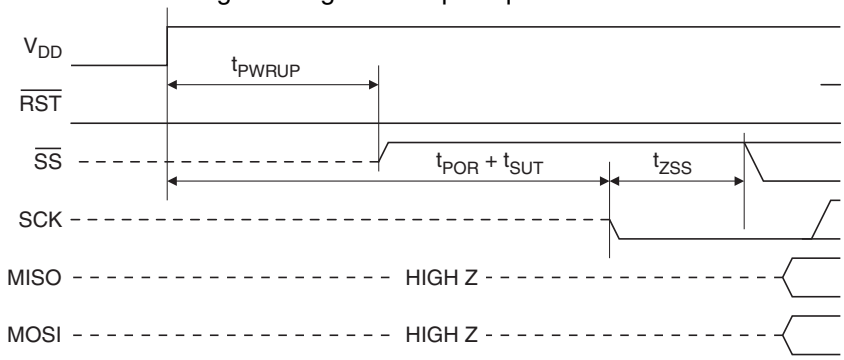

24.6.5.2 *Power-down Sequence*

Execute this sequence to power-down the device **after** programming.

1. Drive SCK low.
2. Wait at least t_{SSD} and Tristate MOSI.
3. Wait at least t_{RHZ} and drive RST low.
4. Wait at least t_{SSZ} and tristate SCK.
5. Wait no more than t_{PWRDN} and power off VDD.

Figure 24-23. Serial Programming Power-down Sequence

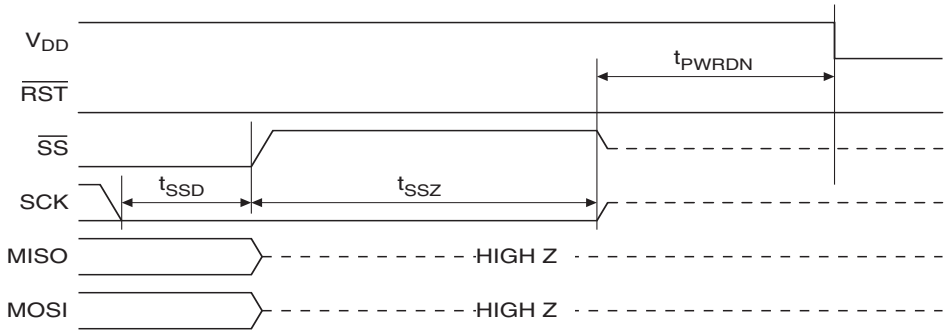

24.6.5.3 *ISP Start Sequence*

Execute this sequence to exit CPU execution mode and enter ISP mode when the device has passed Power-On Reset and is already operational.

1. Drive RST high.
2. Wait $t_{RLZ} + t_{STL}$.
3. Drive SCK low.
4. Start programming session.

Figure 24-24. In-System Programming (ISP) Start Sequence

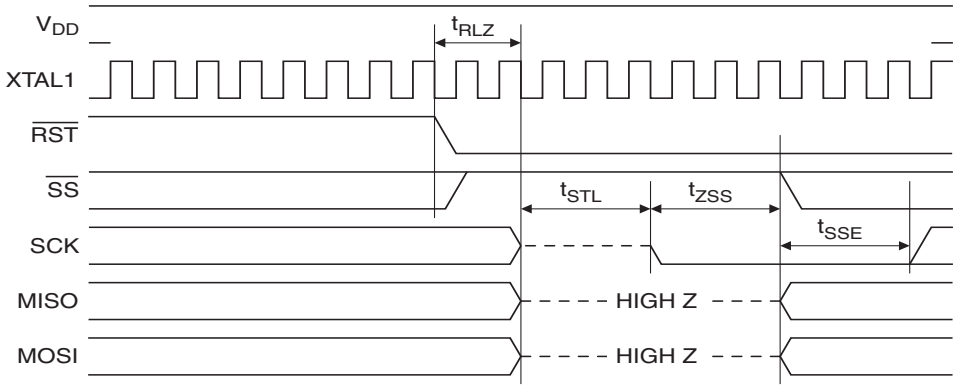

24.6.5.4 *ISP Exit Sequence*

Execute this sequence to exit ISP mode and resume CPU execution mode.

1. Drive SCK low.
1. Wait at least t_{SSD}.
2. Tristate MOSI.
3. Wait at least t_{RHZ} and bring RST low.
4. Wait t_{SSZ} and tristate SCK.

Figure 24-25. In-System Programming (ISP) Exit Sequence

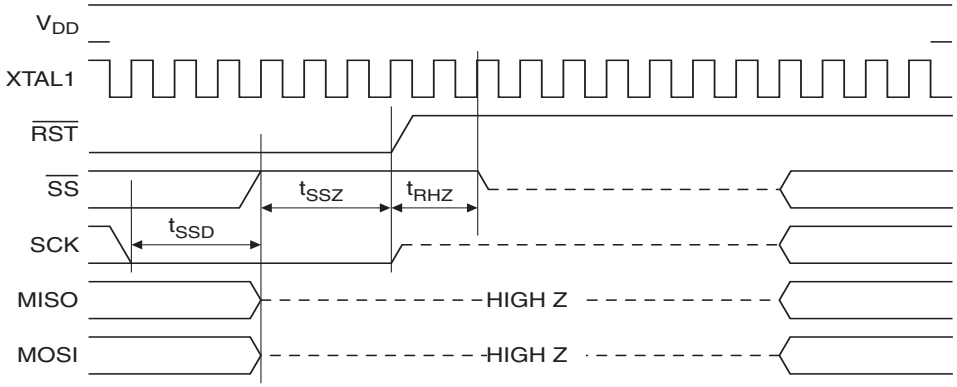

Note: The waveforms on this page are not to scale.

24.6.5.5 *Serial Peripheral Interface*

The Serial Peripheral Interface (SPI) is a byte-oriented full-duplex synchronous serial communication channel. During In-System Programming, the programmer always acts as the SPI master and the target device always acts as the SPI slave. The target device receives serial data on MOSI and outputs serial data on MISO. The Programming Interface implements a standard SPI Port with a fixed data order and For In-System Programming, bytes are transferred MSB first as shown in Figure 24-26. The SCK phase and polarity follow SPI clock mode 0 (CPOL = 0, CPHA = 0) where bits are sampled on the rising edge of SCK and output on the falling edge of SCK. For more detailed timing information see Figure 24-27.

Figure 24-26. ISP Byte Sequence

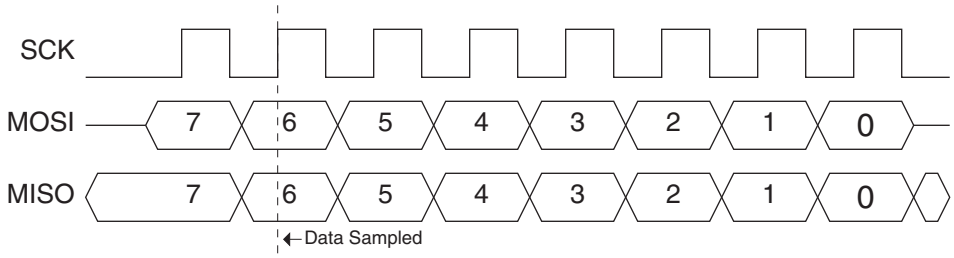

Figure 24-27. Serial Programming Interface Timing

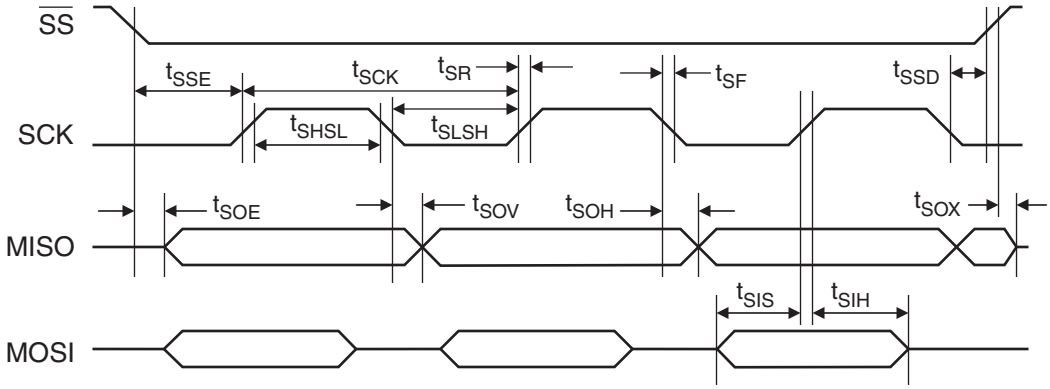

Figure 24-28. Parallel Programming Interface Timing

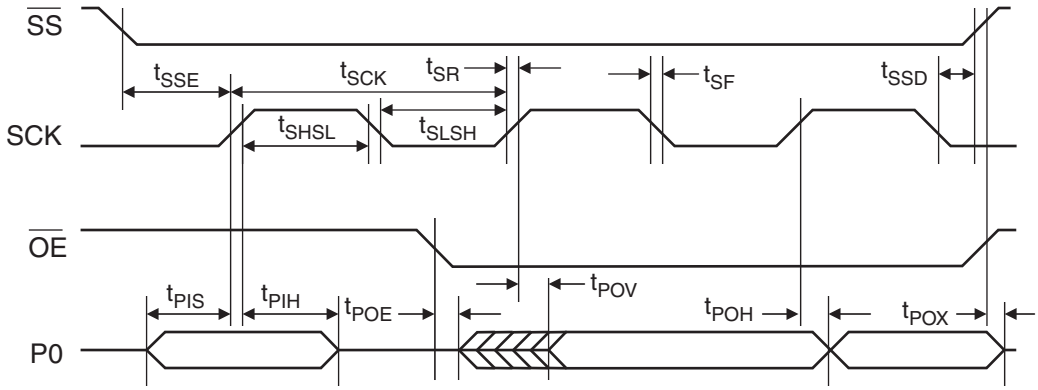

24.6.6 Timing Parameters

The timing parameters for Figure 24-22, Figure 24-23, Figure 24-24, Figure 24-25, Figure 24-27 and Figure 24-28 are shown in Table .

Table 24-23. Programming Interface Timing Parameters

Symbol	Parameter	Min	Max	Units
t_{CLCL}	System Clock Cycle Time	0	60	ns
t_{PWUP}	Power On to $\overline{SS}$ High Time	10		µs
t_{POR}	Power-on Reset Time		100	µs
t_{PWDN}	$\overline{SS}$ Tristate to Power Off		1	µs
t_{RLZ}	RST Low to I/O Tristate	t_{CLCL}	2 t_{CLCL}	ns
t_{STL}	RST Low Settling Time	100		ns
t_{RHZ}	RST High to $\overline{SS}$ Tristate	0	2 t_{CLCL}	ns
t_{SCK}	Serial Clock Cycle Time	200[(1)]		ns
t_{SHSL}	Clock High Time	75		ns
t_{SLSH}	Clock Low Time	50		ns
t_{SR}	Rise Time		25	ns
t_{SF}	Fall Time		25	ns
t_{SIS}	Serial Input Setup Time	10		ns
t_{SIH}	Serial Input Hold Time	10		ns
t_{SOH}	Serial Output Hold Time		10	ns
t_{SOV}	Serial Output Valid Time		35	ns
t_{PIS}	Parallel Input Setup Time	10		ns
t_{PIH}	Parallel Input Hold Time	10		ns
t_{POH}	Parallel Output Hold Time		10	ns
t_{POV}	Parallel Output Valid Time		35	ns
t_{SOE}	Serial Output Enable Time		10	ns
t_{SOX}	Serial Output Disable Time		25	ns
t_{POE}	Parallel Output Enable Time		10	ns
t_{POX}	Parallel Output Disable Time		25	ns
t_{SSE}	$\overline{SS}$ Active Lead Time	t_{SLSH}		ns
t_{SSD}	$\overline{SS}$ Inactive Lag Time	t_{SLSH}		ns
t_{ZSS}	SCK Setup to $\overline{SS}$ Low	25		ns
t_{SSZ}	SCK Hold after $\overline{SS}$ High	25		ns
t_{WR}	Write Cycle Time	2.5		ms
t_{AWR}	Write Cycle with Auto-Erase Time	5		ms
t_{ERS}	Chip Erase Cycle Time	7.5		ms

Note: 1. t_{SCK} is independent of t_{CLCL}.

25. Electrical Characteristics

25.1 Absolute Maximum Ratings*

Operating Temperature	-40°C to +85°C
Storage Temperature	-65°C to +150°C
Voltage on Any Pin with Respect to Ground	-0.7V to +5.5V
Maximum Operating Voltage	5.5V
DC Output Current	15.0 mA

*NOTICE: Stresses beyond those listed under "Absolute Maximum Ratings" may cause permanent damage to the device. This is a stress rating only and functional operation of the device at these or any other conditions beyond those indicated in the operational sections of this specification is not implied. Exposure to absolute maximum rating conditions for extended periods may affect device reliability.

25.2 DC Characteristics

T_A = -40°C to 85°C, V_{DD} = 2.4V to 5.5V (unless otherwise noted)

Symbol	Parameter	Condition	Min	Max	Units
V_{IL}	Input Low-voltage		-0.5	0.2 V_{DD} - 0.1	V
V_{IH}	Input High-voltage		0.2 V_{DD} + 0.9	V_{DD} + 0.5	V
V_{OL}	Output Low-voltage[1]	I_{OL} = 10 mA, V_{DD} = 2.7V, T_A = 85°C		0.5	V
V_{OH}	Output High-voltage With Weak Pull-ups Enabled	I_{OH} = -80 µA, V_{DD} = 3V ±10%	2.4		V
		I_{OH} = -30 µA	0.75 V_{DD}		V
		I_{OH} = -12 µA	0.9 V_{DD}		V
V_{OH1}	Output High-voltage With Strong Pull-ups Enabled	I_{OH} = -10 mA, T_A = 85°C	0.9 V_{DD}		
		I_{OH} = -5 mA, T_A = 85°C	0.75 V_{DD}		
I_{IL}	Logic 0 Input Current	V_{IN} = 0.45V		-50	µA
I_{TL}	Logic 1 to 0 Transition Current	V_{IN} = 2V, V_{DD} = 5V ±10%		-750	µA
I_{LI}	Input Leakage Current	0 < V_{IN} < V_{DD}		±10	µA
R_{RST}	Reset Pull-up Resistor		50	150	kΩ
C_{IO}	Pin Capacitance	Test Freq. = 1 MHz, T_A = 25°C		10	pF
I_{CC}	Power Supply Current	Active Mode, 12 MHz, V_{DD} = 5.5V		7	mA
		Idle Mode, 12 MHz, V_{DD} = 5.5V P1.0 & P1.1 = 0V or V_{DD}		3	mA
	Power-down Mode[2]	V_{DD} = 5.5V, P1.0 & P1.1 = 0V or V_{DD}		5	µA
		V_{DD} = 3V, P1.0 & P1.1 = 0V or V_{DD}		2	µA

Notes:
1. Under steady state (non-transient) conditions, I_{OL} must be externally limited as follows:
   Maximum I_{OL} per port pin: 10 mA
   Maximum total I_{OL} for all output pins: 15 mA
   If I_{OL} exceeds the test condition, V_{OL} may exceed the related specification. Pins are not guaranteed to sink current greater than the listed test conditions.
2. Minimum V_{DD} for Power-down is 2V.
3. All characteristics contained in this datasheet are based on simulation and characterization of other microcontrollers manufactured in the same process technology. These values are preliminary values representing design targets, and will be updated after characterization of actual silicon.

25.3 Typical Characteristics

The following charts show typical behavior. These figures are not tested during manufacturing. All current consumption measurements are performed with all I/O pins configured as quasi-bidirectional (with internal pull-ups). A square wave generator with rail-to-rail output is used as an external clock source for consumption versus frequency measurements.

25.3.1 Supply Current (Internal Oscillator)

Figure 25-1. Active Supply Current vs. Vcc (8.0 MHz Internal Oscillator)

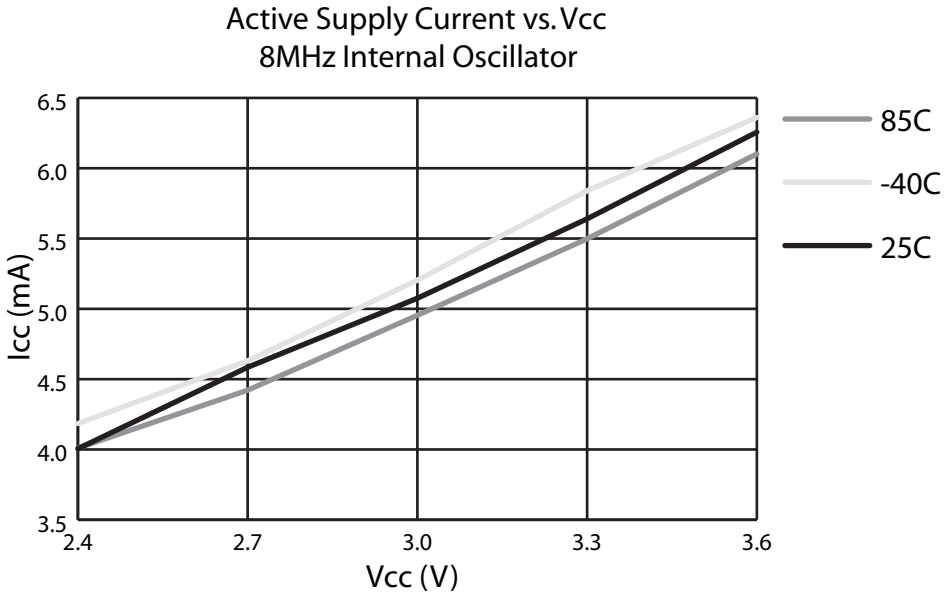

Figure 25-2. Idle Supply Current vs. Vcc (8.0 MHz Internal Oscillator)

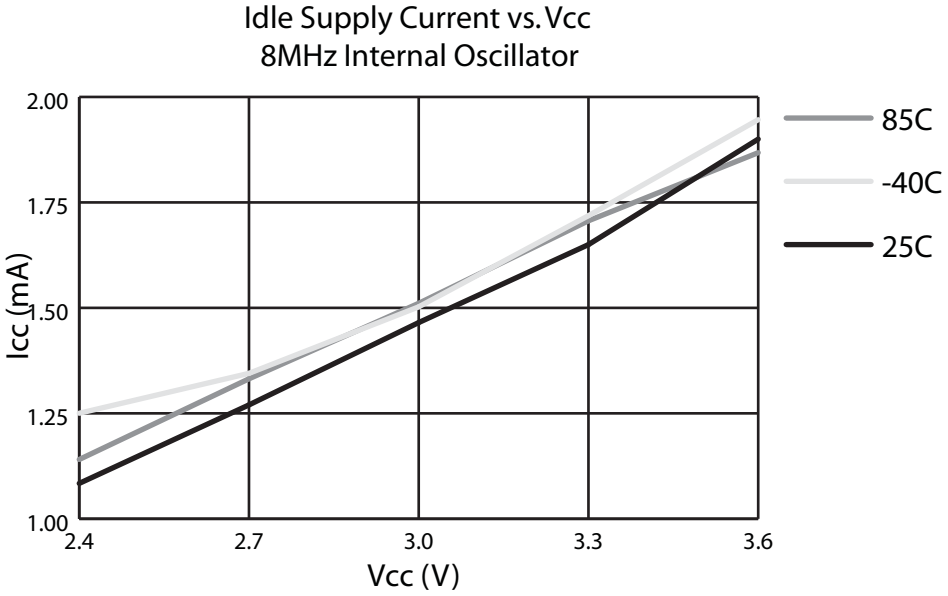

25.3.2 Supply Current (External Clock)

Figure 25-3. Active Supply Current vs. Frequency

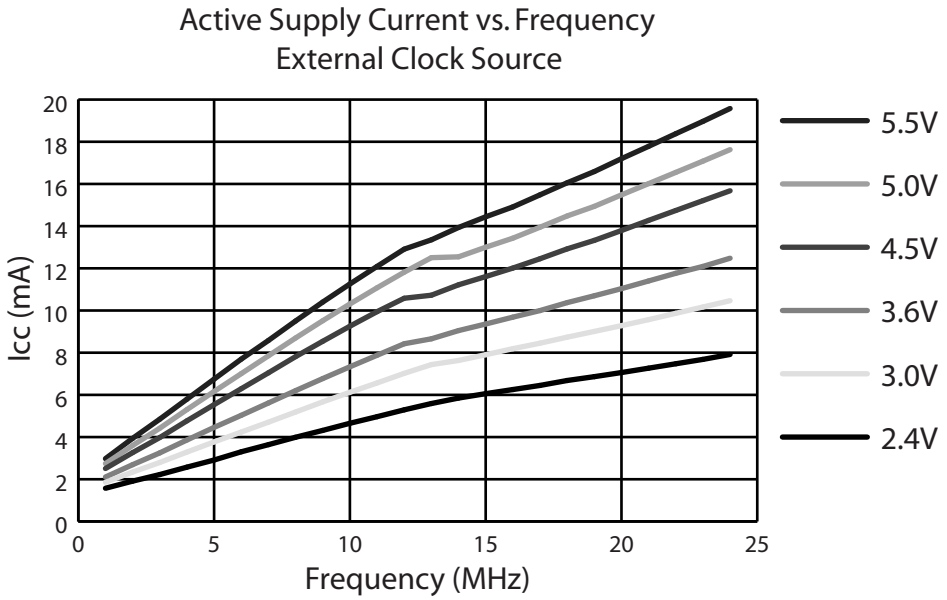

Figure 25-4. Idle Supply Current vs. Frequency

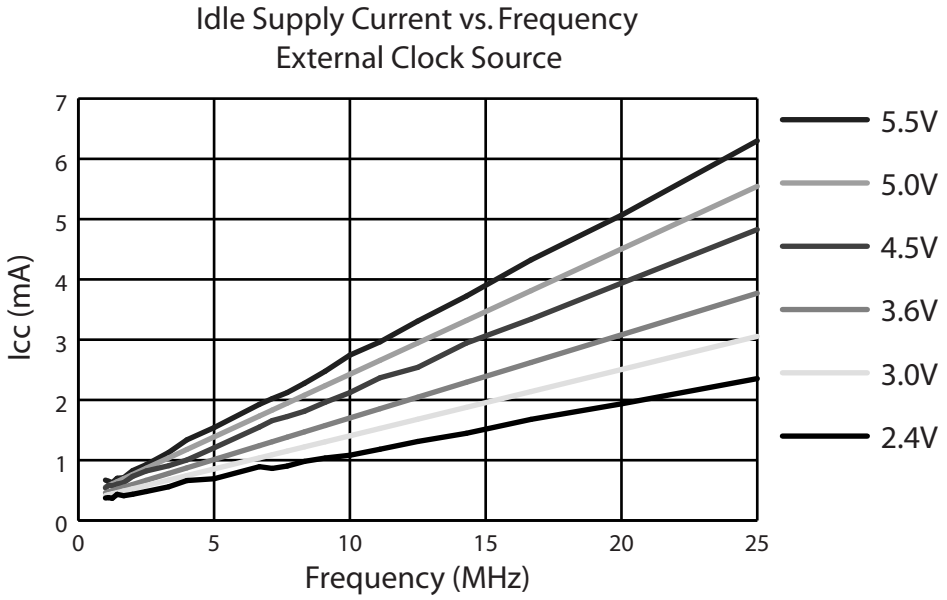

Note: All characteristics contained in this datasheet are based on simulation and characterization of other microcontrollers manufactured in the same process technology. These values are preliminary values representing design targets, and will be updated after characterization of actual silicon.

25.4 Clock Characteristics

The values shown in this table are valid for T_A = -40°C to 85°C and V_{DD} = 2.4 to 5.5V, unless otherwise noted.

Figure 25-5. External Clock Drive Waveform

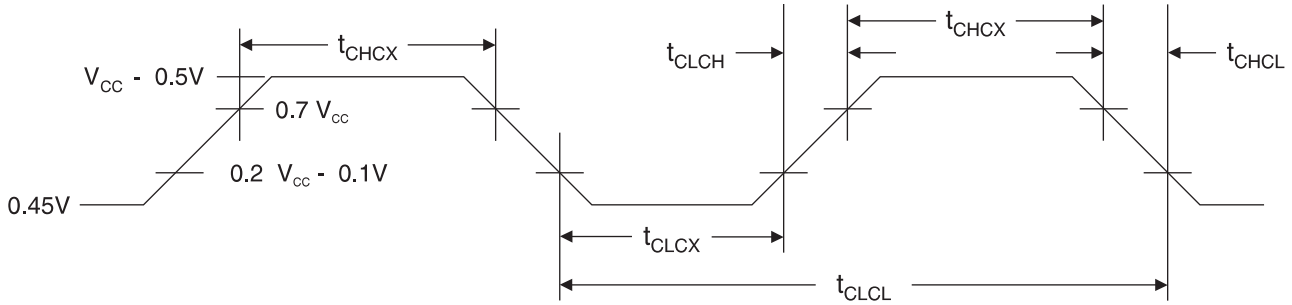

Table 25-1. External Clock Parameters

Symbol	Parameter	V_{DD} = 2.4V to 5.5V		V_{DD} = 4.5V to 5.5V		Units
		Min	Max	Min	Max	
$1/t_{CLCL}$	Oscillator Frequency	0	20	0	25	MHz
t_{CLCL}	Clock Period	50		40		ns
t_{CHCX}	External Clock High Time			12		ns
t_{CLCX}	External Clock Low Time			12		ns
t_{CLCH}	External Clock Rise Time				5	ns
t_{CHCL}	External Clock Fall Time				5	ns

Table 25-2. Clock Characteristics

Symbol	Parameter	Condition	Min	Max	Units
f_{XTAL}	Crystal Oscillator Frequency	Low Power Oscillator	0	12	MHz
		High Power Oscillator	0	24	MHz
f_{RC}	Internal Oscillator Frequency	T_A = 25°C; V_{DD} = 5.0V	7.92	8.08	MHz
		V_{DD} = 2.4 to 5.5V	7.80	8.20	MHz

Figure 25-6. Typical Internal Oscillator Frequency vs. VCC

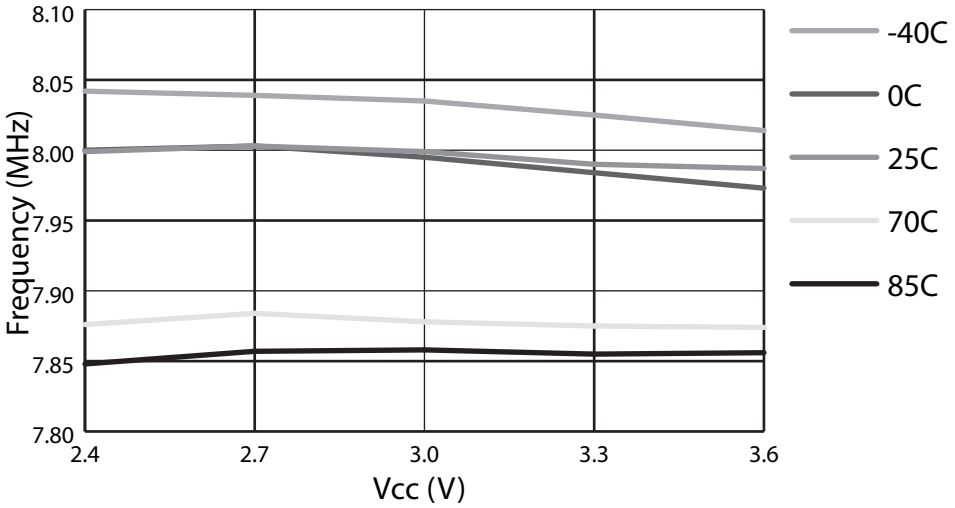

25.5 Reset Characteristics

The values shown in this table are valid for T_A = -40°C to 85°C and V_{DD} = 2.4 to 5.5V, unless otherwise noted.

Table 25-3. Reset Characteristics

Symbol	Parameter	Condition	Min	Max	Units
R_{RST}	Reset Pull-up Resistor		50	150	kΩ
V_{POR}	Power-On Reset Threshold		1.3	1.6	V
V_{BOD}	Brown-Out Detector Threshold		1.9	2.2	V
V_{BH}	Brown-Out Detector Hysteresis		200	300	mV
t_{POR}	Power-On Reset Delay		135	150	µs
t_{WDTRST}	Watchdog Reset Pulse Width		$49t_{CLCL}$		ns

25.6 External Memory Characteristics

The values shown in this table are valid for T_A = -40°C to 85°C and V_{DD} = 2.4 to 5.5V, unless otherwise noted. Under operating conditions, load capacitance for Port 0, ALE and $\overline{PSEN}$ = 100 pF; load capacitance for all other outputs = 80 pF. Parameters refer to Figure 25-7, Figure 25-8 and Figure 25-9.

Table 25-4. External Program and Data Memory Characteristics

Symbol	Parameter	Compatibility Mode[1]		Fast Mode[1]		Units
		Min	Max	Min	Max	
$1/t_{CLCL}$	Oscillator Frequency	0	24	0	24	MHz
t_{LHLL}	ALE Pulse Width	t_{CLCL} - d		t_{CLCL} - d[4]		ns
t_{AVLL}	Address Valid to ALE Low	$0.5t_{CLCL}$ - d[2]		$0.5t_{CLCL}$ - d[2]		ns
t_{LLAX}	Address Hold after ALE Low	$0.5t_{CLCL}$ - d[3]		$0.5t_{CLCL}$ - d[3]		ns
t_{LLIV}	ALE Low to Valid Instruction In		$2t_{CLCL}$ - d		$2t_{CLCL}$ - d	ns
t_{LLPL}	ALE Low to $\overline{PSEN}$ Low	$0.5t_{CLCL}$ - d[2]		$0.5t_{CLCL}$ - d[2]		ns
t_{PLPH}	$\overline{PSEN}$ Pulse WIdth	$1.5t_{CLCL}$ - d[2]		$1.5t_{CLCL}$ - d[2]		ns

Table 25-4. External Program and Data Memory Characteristics

t_{PLIV}	$\overline{PSEN}$ Low to Valid Instruction In		$1.5t_{CLCL} - d$[2]		$1.5t_{CLCL} - d$[2]	ns
t_{PXIX}	Input Instruction Hold after $\overline{PSEN}$	0		0		ns
t_{PXIZ}	Input Instruction Float after $\overline{PSEN}$		$0.5t_{CLCL} - d$[2]		$0.5t_{CLCL} - d$[2]	ns
t_{PXAV}	$\overline{PSEN}$ to Address Valid	$0.5t_{CLCL} - d$[2]		$0.5t_{CLCL} - d$[2]		ns
t_{AVIV}	Address to Valid Instruction In		$2.5t_{CLCL} - d$[2]		$2.5t_{CLCL} - d$[2]	ns
t_{PLAZ}	$\overline{PSEN}$ Low to Address Float		10		10	ns
t_{RLRH}	$\overline{RD}$ Pulse Width[5]	$3t_{CLCL} - d$		$t_{CLCL} - d$		ns
t_{WLWH}	$\overline{WR}$ Pulse Width[5]	$3t_{CLCL} - d$		$t_{CLCL} - d$		ns
t_{RLDV}	$\overline{RD}$ Low to Valid Data In		$2.5t_{CLCL} - d$		$t_{CLCL} - d$	ns
t_{RHDX}	Data Hold after $\overline{RD}$	0		0		ns
t_{RHDZ}	Data Float after $\overline{RD}$		$t_{CLCL} - d$		$t_{CLCL} - d$	ns
t_{LLDV}	ALE Low to Valid Data In		$4t_{CLCL} - d$		$2t_{CLCL} - d$	ns
t_{AVDV}	Address to Valid Data In		$4.5t_{CLCL} - d$[2]		$2.5t_{CLCL} - d$[2]	ns
t_{LLWL}	ALE Low to $\overline{RD}$ or $\overline{WR}$ Low	$1.5t_{CLCL} - d$	$1.5t_{CLCL} + d$	$t_{CLCL} - d$	$t_{CLCL} + d$	ns
t_{AVWL}	Address to $\overline{RD}$ or $\overline{WR}$ Low	$2t_{CLCL} - d$[2]		$1.5t_{CLCL} - d$[2]		ns
t_{QVWX}	Data Valid to $\overline{WR}$ Transition	$1t_{CLCL} - d$[2]		$0.5t_{CLCL} - d$[2]		ns
t_{QVWH}	Data Valid to $\overline{WR}$ High	$4t_{CLCL} - d$[2]		$1.5t_{CLCL} - d$[2]		ns
t_{WHQX}	Data Hold after $\overline{WR}$	$1t_{CLCL} - d$[3]		$0.5t_{CLCL} - d$[3]		ns
t_{RLAZ}	$\overline{RD}$ Low to Address Float		$-1t_{CLCL} + d$[2]		$-0.5t_{CLCL} + d$[2]	ns
t_{WHAX}	Address Hold after $\overline{RD}$ or $\overline{WR}$ High	$1t_{CLCL} - d$[3]		$0.5t_{CLCL} - d$[3]		ns
t_{WHLH}	$\overline{RD}$ or $\overline{WR}$ High to ALE High	$0.5t_{CLCL} - d$	$0.5t_{CLCL} + d$	$t_{CLCL} - d$		ns

Notes:
1. Compatibility Mode timing for MOVX also applies to Fast Mode during exeternal execution of MOVX.
2. This assumes 50% clock duty cycle. The half period depends on the clock high value t_{CHCX} (high duty cycle).
3. This assumes 50% clock duty cycle. The half period depends on the clock low value t_{CLCX} (low duty cycle).
4. In some cases parameter t_{LHLL} may have a minimum of $0.5t_{CLCL}$ during Fast mode external execution with DISALE = 0.
5. The strobe pulse width may be lengthened by 1, 2 or 3 additional t_{CLCL} using wait states.

Figure 25-7. External Program Memory Read Cycle

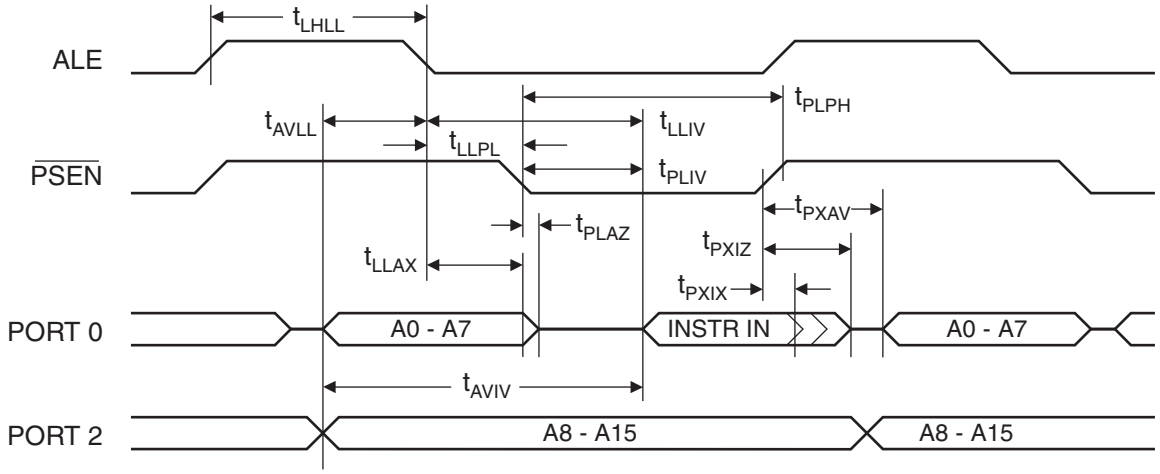

Figure 25-8. External Data Memory Read Cycle

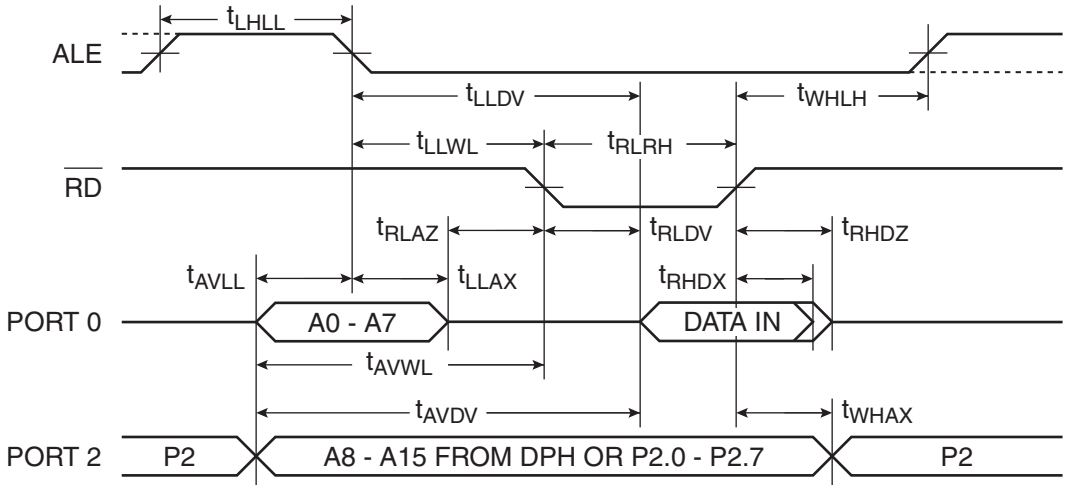

Figure 25-9. External Data Memory Write Cycle

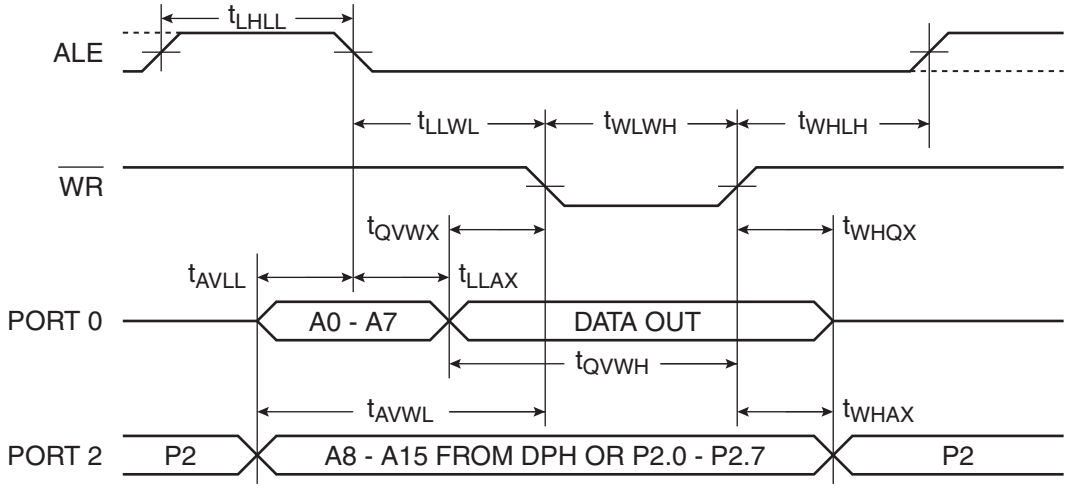

25.7 Serial Peripheral Interface Timing

The values shown in these tables are valid for T_A = -40°C to 85°C and V_{DD} = 2.4 to 5.5V, unless otherwise noted.

Table 25-5. SPI **Master** Characteristics

Symbol	Parameter	Min	Max	Units
t_{CLCL}	Oscillator Period	41.6		ns
t_{SCK}	Serial Clock Cycle Time	$4t_{CLCL}$		ns
t_{SHSL}	Clock High Time	$t_{SCK}/2$ - 25		ns
t_{SLSH}	Clock Low Time	$t_{SCK}/2$ - 25		ns
t_{SR}	Rise Time		25	ns
t_{SF}	Fall Time		25	ns
t_{SIS}	Serial Input Setup Time	10		ns

Table 25-5. SPI **Master** Characteristics

Symbol	Parameter	Min	Max	Units
t_{SIH}	Serial Input Hold Time	10		ns
t_{SOH}	Serial Output Hold Time		10	ns
t_{SOV}	Serial Output Valid Time		35	ns

Table 25-6. SPI **Slave** Characteristics

Symbol	Parameter	Min	Max	Units
t_{CLCL}	Oscillator Period	41.6		ns
t_{SCK}	Serial Clock Cycle Time	$4t_{CLCL}$		ns
t_{SHSL}	Clock High Time	$1.5\ t_{CLCL} - 25$		ns
t_{SLSH}	Clock Low Time	$1.5\ t_{CLCL} - 25$		ns
t_{SR}	Rise Time		25	ns
t_{SF}	Fall Time		25	ns
t_{SIS}	Serial Input Setup Time	10		ns
t_{SIH}	Serial Input Hold Time	10		ns
t_{SOH}	Serial Output Hold Time		10	ns
t_{SOV}	Serial Output Valid Time		35	ns
t_{SOE}	Output Enable Time		10	ns
t_{SOX}	Output Disable Time		25	ns
t_{SSE}	Slave Enable Lead Time	10		ns
t_{SSD}	Slave Disable Lag Time	0		ns

Figure 25-10. SPI Master Timing (CPHA = 0)

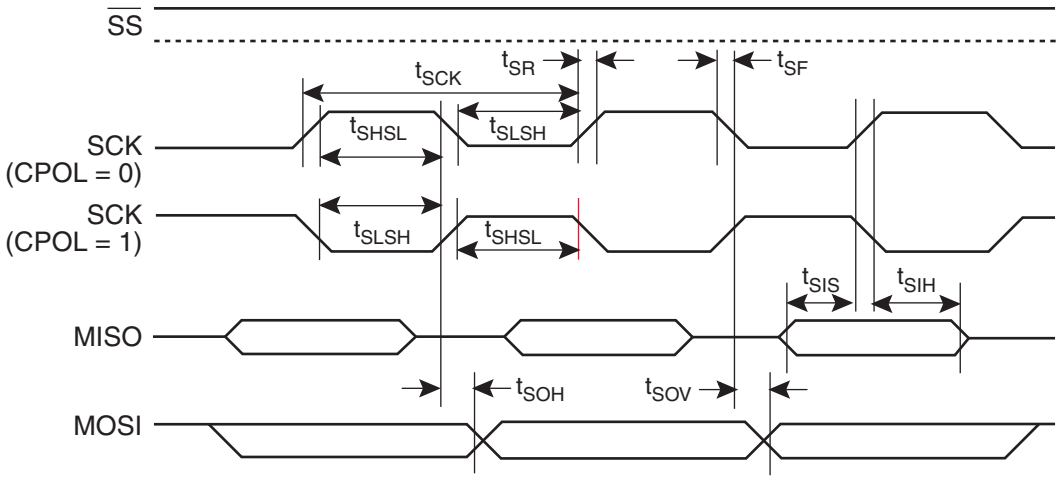

Figure 25-11. SPI Slave Timing (CPHA = 0)

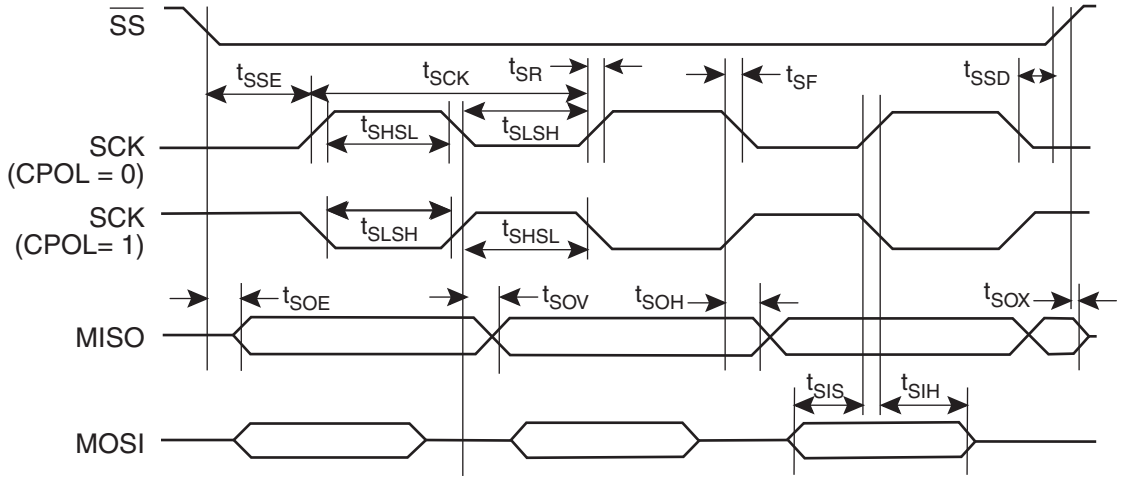

Figure 25-12. SPI Master Timing (CPHA = 1)

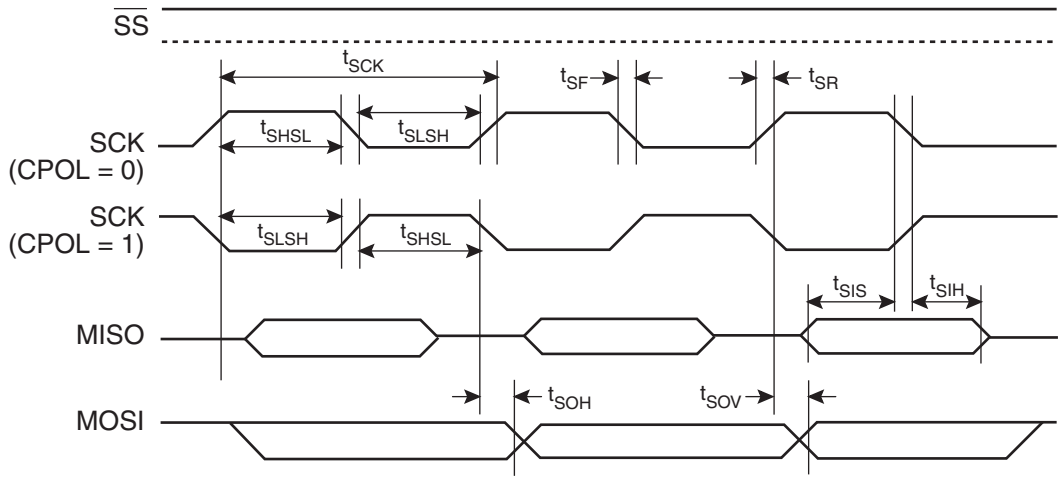

Figure 25-13. SPI Slave Timing (CPHA = 1)

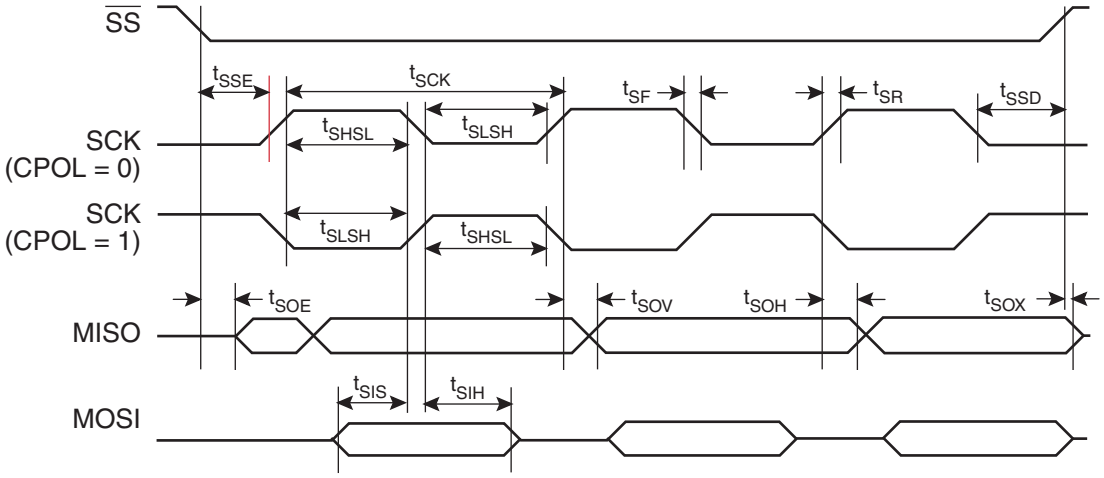

25.8 Two-wire Serial Interface Characteristics

Table 25-7 describes the requirements for devices connected to the Two-wire Serial Bus. The AT89LP51RB2/RC2/IC2 Two-wire Serial Interface meets or exceeds these requirements under the noted conditions. The values shown in this table are valid for T_A = -40°C to 85°C and V_{DD} = 2.4 to 5.5V, unless otherwise noted.

Timing symbols refer to Figure 25-14.

Table 25-7. Two-wire Serial Bus Requirements

Symbol	Parameter	Condition	Min	Max	Units
V_{IL}	Input Low-voltage		-0.5	0.3 V_{DD}	V
V_{IH}	Input High-voltage		0.7 V_{DD}	V_{DD} + 0.5	V
V_{hys} (1)	Hysteresis of Schmitt Trigger Inputs		0.05 V_{DD} (2)	–	V
V_{OL} (1)	Output Low-voltage	3 mA sink current	0	0.4	V
t_r (1)	Rise Time for both SDA and SCL		20 + 0.1C_b (3)(2)	300	ns
t_{of} (1)	Output Fall Time from V_{IHmin} to V_{ILmax}	10 pF < C_b < 400 pF (3)	20 + 0.1C_b (3)(2)	250	ns
t_{SP} (1)	Spikes Suppressed by Input Filter		0	50 (2)	ns
I_i	Input Current each I/O Pin	0.1V_{DD} < V_i < 0.9V_{DD}	-10	10	µA
C_i (1)	Capacitance for each I/O Pin		–	10	pF
f_{SCL}	SCL Clock Frequency	f_{CK} (4) > 16f_{SCL}	0	400	kHz
Rp	Value of Pull-up resistor	f_{SCL} ≤100 kHz	$\frac{V_{DD} - 0.4V}{3mA}$	$\frac{1000ns}{C_b}$	Ω
		f_{SCL} > 100 kHz	$\frac{V_{DD} - 0.4V}{3mA}$	$\frac{300ns}{C_b}$	Ω
$t_{HD;STA}$	Hold Time (repeated) START Condition	f_{SCL} ≤100 kHz	4.0	–	µs
		f_{SCL} > 100 kHz	0.6	–	µs
t_{LOW}	Low Period of the SCL Clock	f_{SCL} ≤100 kHz	4.7	–	µs
		f_{SCL} > 100 kHz	1.3	–	µs
t_{HIGH}	High period of the SCL clock	f_{SCL} ≤100 kHz	4.0	–	µs
		f_{SCL} > 100 kHz	0.6	–	µs
$t_{SU;STA}$	Set-up time for a repeated START condition	f_{SCL} ≤100 kHz	4.7	–	µs
		f_{SCL} > 100 kHz	0.6	–	µs
$t_{HD;DAT}$	Data hold time	f_{SCL} ≤100 kHz	0	3.45	µs
		f_{SCL} > 100 kHz	0	0.9	µs
$t_{SU;DAT}$	Data setup time	f_{SCL} ≤100 kHz	250	–	ns
		f_{SCL} > 100 kHz	100	–	ns
$t_{SU;STO}$	Setup time for STOP condition	f_{SCL} ≤100 kHz	4.0	–	µs
		f_{SCL} > 100 kHz	0.6	–	µs
t_{BUF}	Bus free time between a STOP and START condition	f_{SCL} ≤100 kHz	4.7	–	µs

Notes: 1. In AT89LP51RB2/RC2/IC2, this parameter is characterized and not 100% tested.
2. Required only for f_{SCL} > 100 kHz.

3. C_b = capacitance of one bus line in pF.
4. f_{CK} = CPU clock frequency

Figure 25-14. Two-wire Serial Bus Timing

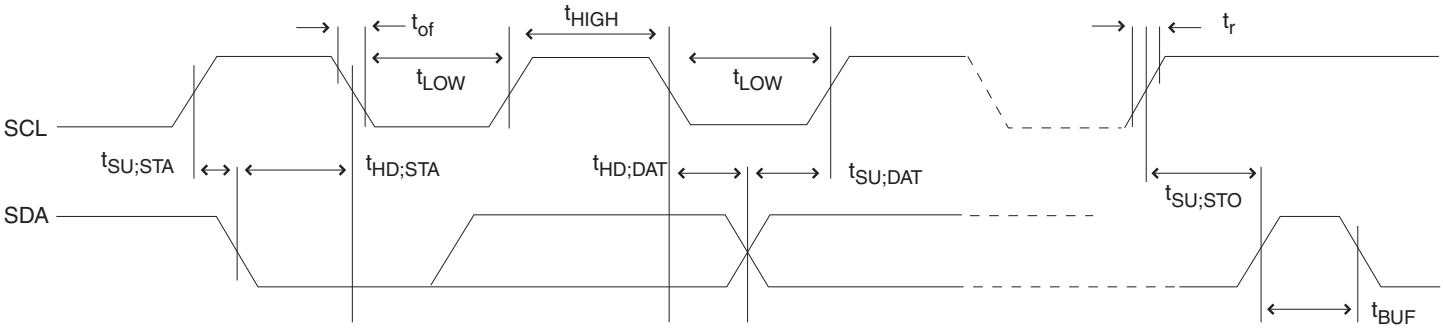

25.9 Serial Port Timing: Shift Register Mode

The values in this table are valid for V_{DD} = 2.4V to 5.5V and Load Capacitance = 80 pF.

Symbol	Parameter	SMOD1 = 0		SMOD1 = 1		Units
		Min	Max	Min	Max	
t_{XLXL}	Serial Port Clock Cycle Time	$4t_{CLCL}$ -15		$2t_{CLCL}$ -15		µs
t_{QVXH}	Output Data Setup to Clock Rising Edge	$3t_{CLCL}$ -15		t_{CLCL} -15		ns
t_{XHQX}	Output Data Hold after Clock Rising Edge	t_{CLCL} -15		t_{CLCL} -15		ns
t_{XHDX}	Input Data Hold after Clock Rising Edge	0		0		ns
t_{XHDV}	Input Data Valid to Clock Rising Edge	15		15		ns

Figure 25-15. Shift Register Mode Timing Waveform

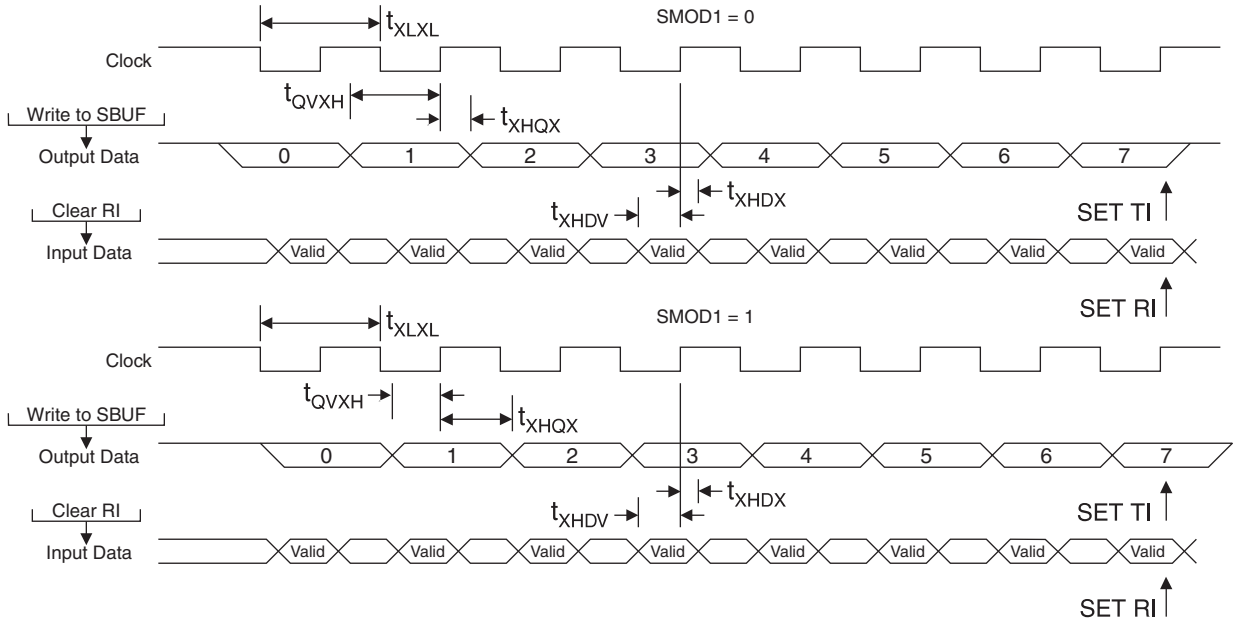

25.10 Dual Analog Comparator Characteristics

The values shown in this table are valid for T_A = -40°C to 85°C and V_{DD} = 2.4 to 5.5V, unless otherwise noted.

Table 25-8. Dual Analog Comparator Characteristics

Symbol	Parameter	Condition	Min	Max	Units
V_{CM}	Common Mode Input Voltage		GND	V_{DD}	V
V_{OS}	Input Offset Voltage	V_{DD} = 3.6V		20	mV
V_{AREF}	Analog Reference Voltage		1.23	1.36	V
$V_{\Delta REF}$	Reference Delta Voltage		90	120	mV
t_{CMP}	Comparator Propagation Delay	$V_{IN+} - V_{IN-}$ = 20mV; V_{DD} = 2.4V		200	ns
t_{AREF}	Reference Settling Time		3		µs

Figure 25-16. Analog Reference Voltage Typical Characteristics

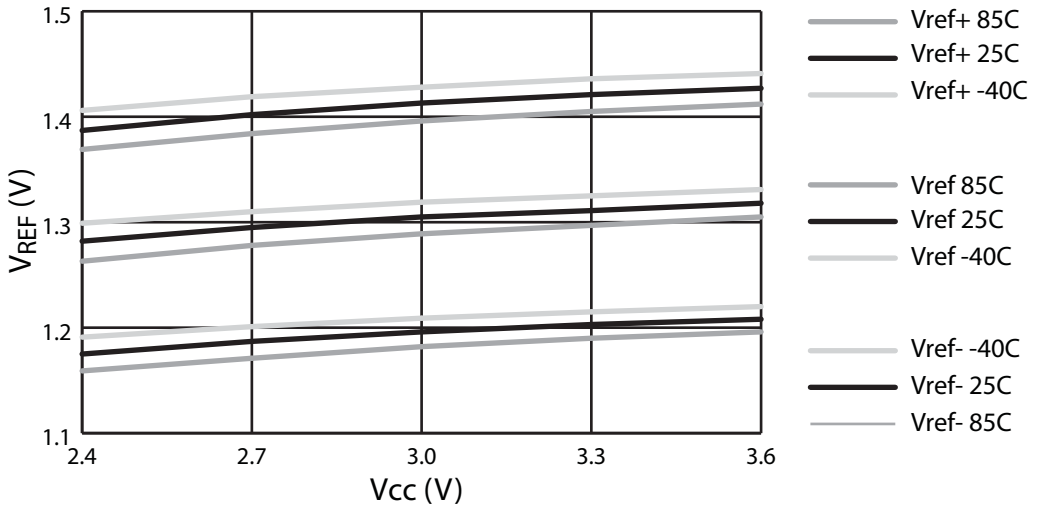

25.11 DADC Characteristics

The values shown in these tables are valid for T_A = -40°C to 85°C and V_{DD} = 2.4 to 5.5V, unless otherwise noted.

Table 25-9. ADC Characteristics

Symbol	Parameter	Condition	Min	Typical	Max	Units
	Resolution				10	Bits
	Absolute Accuracy (including INL, DNL, quantization error, gain and offset error)			4		LSB
	Integral Non-Linearity (INL)			4		LSB
	DIfferential Non-Linearity (DNL)			4		LSB

Table 25-9. ADC Characteristics (Continued)

Symbol	Parameter	Condition	Min	Typical	Max	Units
	Gain Error			16		LSB
	Offset Error			16		LSB
t_{ACK}	Clock Period		500			ns
t_{ADC}	Conversion Time		$13t_{ACK}$		$14t_{ACK}$ + $2t_{CLCL}$	ns
V_{REF}	Reference Voltage	External Reference	$V_{DD}/2$ - 0.2	$V_{DD}/2$	$V_{DD}/2$ + 0.2	V
		Internal Reference	0.9	1.0	1.1	V
V_{IN}	Single-Ended Input Voltage		$V_{DD}/2$ - V_{REF}		$V_{DD}/2$ + V_{REF}	V
V_{CMI}	Differential Input Common Mode Voltage		GND		V_{DD}	V
V_{DI}	Differential Input Voltage		0		$\pm V_{REF}$	V
R_{IN}	Analog Input Resistance			10		kΩ
R_{MUX}	Analog Mux Resistance			10		kΩ
$C_{S/H}$	Sample & Hold Capacitance			3		pF

.

Table 25-10. DAC Characteristics

Symbol	Parameter	Condition	Min	Typical	Max	Units
	Resolution				10	Bits
t_{ACK}	Clock Period	$t_{ACK} \geq t_{CLCL}$	500			ns
t_{DAC}	Conversion Time		$11t_{ACK}$		$12t_{ACK}$ + $2t_{CLCL}$	ns
V_{REF}	Reference Voltage	External Reference	$V_{DD}/2$ - 0.2	$V_{DD}/2$	$V_{DD}/2$ + 0.2	V
		Internal Reference	0.9	1.0	1.1	V
V_{IN}	Single-Ended Input Voltage		$V_{DD}/2$ - V_{REF}		$V_{DD}/2$ + V_{REF}	V
V_{CMO}	Differential Output Common Mode Voltage		$V_{DD}/2$ - 0.2	$V_{DD}/2$	$V_{DD}/2$ + 0.2	V
V_{DO}	Differential Output Voltage		0		$\pm V_{REF}$	V
R_{OUT}	Analog Output Resistance		100		200	kΩ

25.12 Test Conditions

25.12.1 AC Testing Input/Output Waveform[1]

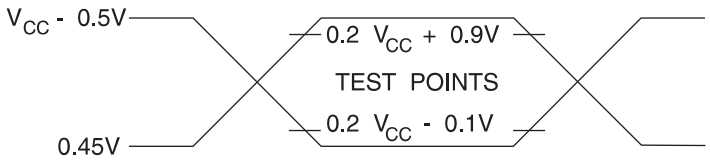

Note: 1. AC Inputs during testing are driven at V_{DD} - 0.5V for a logic “1” and 0.45V for a logic “0”. Timing measurements are made at V_{IH} min. for a logic “1” and V_{IL} max. for a logic “0”.

25.12.2 Float Waveform[1]

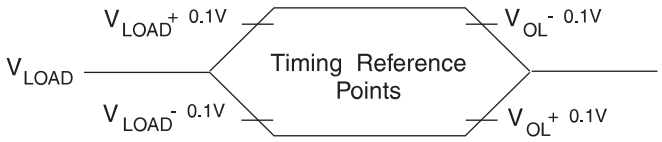

Note: 1. For timing purposes, a port pin is no longer floating when a 100 mV change from load voltage occurs. A port pin begins to float when 100 mV change from the loaded V_{OH}/V_{OL} level occurs.

25.12.3 I_{CC} Test Condition: Active Mode

Figure 25-17. Connection Diagram for I_{CC} Active Measurement. All Other Pins are Disconnected

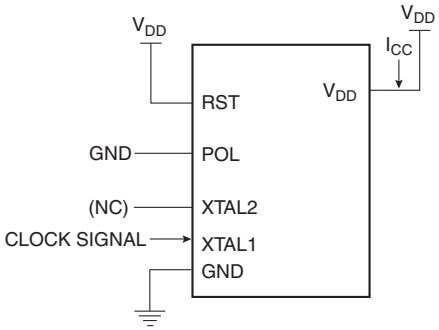

For active supply current measurements all ports are configured in quasi-bidirectional mode. Timers 0, 1 and 2 are configured to be free running in their default timer modes. The CPU executes a simple random number generator that accesses RAM, the SFR bus and exercises the ALU and hardware multiplier.

25.12.4 I_{CC} Test Condition: Idle Mode

Figure 25-18. Connection Diagram for I_{CC} Idle Measurement. All Other Pins are Disconnected-All Other Pins are Disconnected

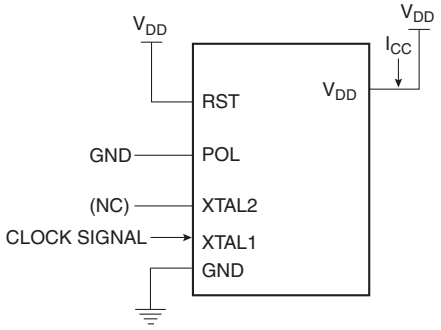

25.12.5 Clock Signal Waveform for I_{CC} Tests

Figure 25-19. Clock Signal Waveform for I_{CC} in Active and Idle Modes, $t_{CLCH} = t_{CHCL} = 5$ ns

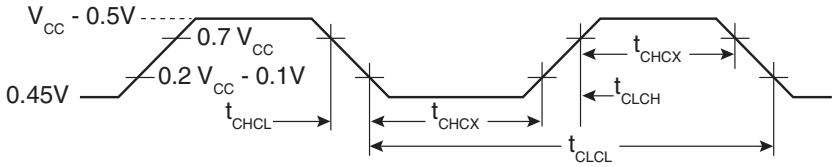

25.12.6 I_{CC} Test Condition: Power-down Mode

Figure 25-20. Connection Diagram for I_{CC} Power-down Measurement.All Other Pins are Disconnected, V_{DD} = 2V to 5.5V

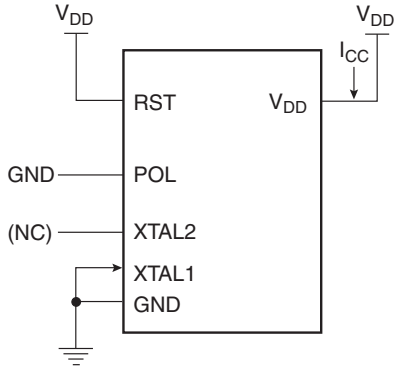

26. Ordering Information

26.1 Green Package Option (Pb/Halide-free)

Supply Voltage	Speed[1]	Temperature Range	Code Flash	# Oscillators	Ordering Code	Package	Packing
2.4V to 5.5V	20 MHz	Industrial (-40° C to 85° C)	24KB	1	AT89LP51RB2-20AAU	44AA (LQFP)	Tray
					AT89LP51RB2-20AAUR		Reel
					AT89LP51RB2-20AU	44A (TQFP)	Tray
					AT89LP51RB2-20AUR		Reel
					AT89LP51RB2-20JU	44J (PLCC)	Stick
					AT89LP51RB2-20JUR		Reel
					AT89LP51RB2-20MU	44M1 (VQFN)	Tray
					AT89LP51RB2-20MUR		Reel
					AT89LP51RB2-20PU	40P6 (PDIP)	Stick
			32KB	1	AT89LP51RC2-20AAU	44AA (LQFP)	Tray
					AT89LP51RC2-20AAUR		Reel
					AT89LP51RC2-20AU	44A (TQFP)	Tray
					AT89LP51RC2-20AUR		Reel
					AT89LP51RC2-20JU	44J (PLCC)	Stick
					AT89LP51RC2-20JUR		Reel
					AT89LP51RC2-20MU	44M1 (VQFN)	Tray
					AT89LP51RC2-20MUR		Reel
					AT89LP51RC2-20PU	40P6 (PDIP)	Stick
			32KB	2	AT89LP51IC2-20AAU	44AA (LQFP)	Tray
					AT89LP51IC2-20AAUR		Reel
					AT89LP51IC2-20AU	44A (TQFP)	Tray
					AT89LP51IC2-20AUR		Reel
					AT89LP51IC2-20JU	44J (PLCC)	Stick
					AT89LP51IC2-20JUR		Reel
					AT89LP51IC2-20MU	44M1 (VQFN)	Tray
					AT89LP51IC2-20MUR		Reel

Notes: 1. Speed is specified for single-cycle Fast Mode with X2 clock
2. See Table 26-1 on page 242 for a cross reference between AT89C51RB2/RC2/IC2 and AT89LP51RB2/RC2/IC2

Package Types	
44AA	44-lead, Very Thin Plastic Quad Flat Package, 1.2 mm Thickness (VQFP/LQFP)
44A	44-lead, Thin Plastic Quad Flat Package, 1.0 mm Thickness (TQFP)
44J	44-lead, Plastic J-leaded Chip Carrier (PLCC)
44M1	44-pad, 7 x 7 x 1.0 mm Body, Plastic Very Thin Quad Flat No Lead Package (VQFN/MLF)
40P6	40-lead, 0.600” Wide, Plastic Dual Inline Package (PDIP)

26.2 Cross Reference with AT89C51RB2/RC2/IC2

Table 26-1. Ordering Cross Reference AT89C51RB2/RC2/IC2 to AT89LP51RB2/RC2/IC2

Device Migration	Package	Packing	Previous Ordering Code	New Ordering Code
AT89C51RB2 to AT89LP51RB2	PLCC44	Stick	AT89C51RB2-SLSUM	AT89LP51RB2-20JU
		Reel	AT89C51RB2-SLRUM	AT89LP51RB2-20JU + SL383
	VQFP44	Tray	AT89C51RB2-RLTUM	AT89LP51RB2-20AAU
		Reel	AT89C51RB2-RLRUM	AT89LP51RB2-20AAU + SL383
AT89C51RC2 to AT89LP51RC2	PLCC44	Stick	AT89C51RC2-SLSUM	AT89LP51RC2-20JU
		Reel	AT89C51RC2-SLRUM	AT89LP51RC2-20JU + SL383
	VQFP44	Tray	AT89C51RC2-RLTUM	AT89LP51RC2-20AAU
		Reel	AT89C51RC2-RLRUM	AT89LP51RC2-20AAU + SL383
AT89C51IC2 to AT89LP51IC2	PLCC44	Stick	AT89C51IC2-SLSUM	AT89LP51IC2-20JU
		Reel	AT89C51IC2-SLRUM	AT89LP51IC2-20JU + SL383
	VQFP44	Tray	AT89C51IC2-RLTUM	AT89LP51IC2-20AAU
		Reel	AT89C51IC2-RLRUM	AT89LP51IC2-20AAU + SL383

Table 26-2. Packages Not Found in AT89C51RB2/RC2/IC2

Device	Package	Packing	Ordering Code
AT89C51RB2 to AT89LP51RB2	TQFP44	Tray	AT89LP51RD2-20AU
		Reel	AT89LP51RD2-20AUR
	VQFN44	Tray	AT89LP51RD2-20MU
		Reel	AT89LP51RD2-20MUR
AT89C51RC2 to AT89LP51RC2	TQFP44	Tray	AT89LP51ED2-20AU
		Reel	AT89LP51ED2-20AUR
	VQFN44	Tray	AT89LP51ED2-20MU
		Reel	AT89LP51ED2-20MUR
AT89C51IC2 to AT89LP51IC2	TQFP44	Tray	AT89LP51ID2-20AU
		Reel	AT89LP51ID2-20AUR
	VQFN44	Tray	AT89LP51ID2-20MU
		Reel	AT89LP51ID2-20MUR

27. Packaging Information

27.1 44AA – VQFP/LQFP

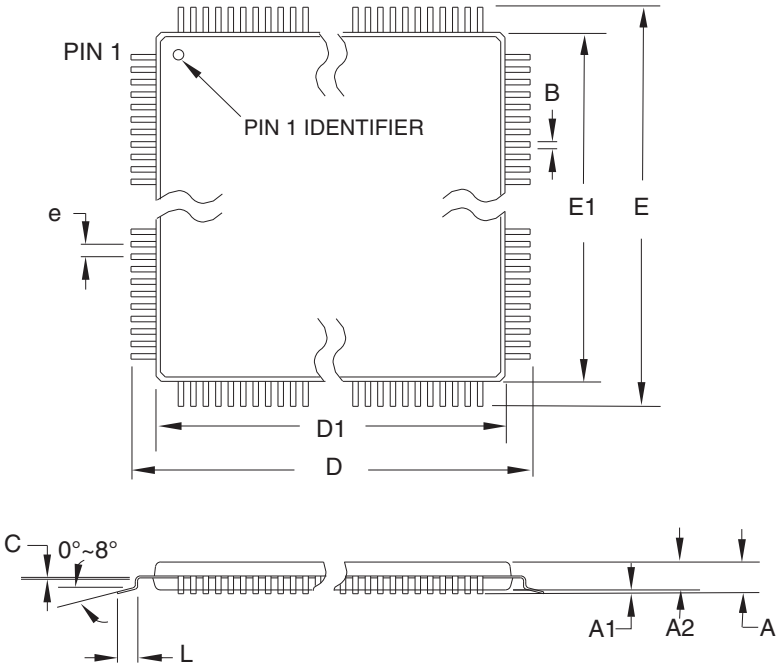

COMMON DIMENSIONS
(Unit of Measure = mm)

SYMBOL	MIN	NOM	MAX	NOTE
A	–	–	1.60	
A1	0.05	–	0.15	
A2	0.95	1.40	1.05	
D	11.9	12.00	12.10	
D1	9.90	10.00	10.10	Note 2
E	11.9	12.00	12.10	
E1	9.90	10.00	10.10	Note 2
B	0.30	–	0.45	
C	0.09	–	0.20	
L	0.45	–	0.75	
e	0.80 TYP			

Notes:
1. This package conforms to JEDEC reference MS-026, Variation ACB.
2. Dimensions D1 and E1 do not include mold protrusion. Allowable protrusion is 0.25 mm per side. Dimensions D1 and E1 are maximum plastic body size dimensions including mold mismatch.
3. Lead coplanarity is 0.102 mm maximum.

10/5/2001

	TITLE	DRAWING NO.	REV.
2325 Orchard Parkway San Jose, CA 95131	**44AA,** 44-lead, 10 x 10 mm Body Size, 1.4 mm Body Thickness, 0.8 mm Lead Pitch, Low Profile Plastic Quad Flat Package (VQFP)	44AA	B

27.2 44A – TQFP

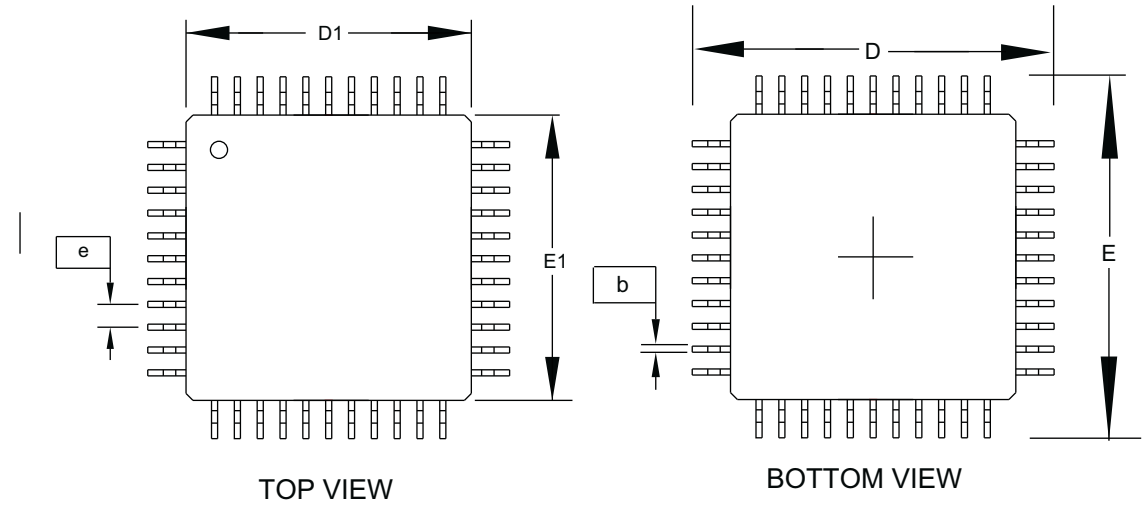

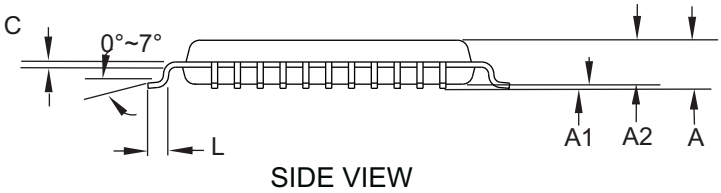

COMMON DIMENSIONS
(Unit of Measure = mm)

SYMBOL	MIN	NOM	MAX	NOTE
A	–	–	1.20	
A1	0.05	–	0.15	
A2	0.95	1.00	1.05	
D	11.75	12.00	12.25	
D1	9.90	10.00	10.10	Note 2
E	11.75	12.00	12.25	
E1	9.90	10.00	10.10	Note 2
B	0.30	–	0.45	
C	0.09	–	0.20	
L	0.45	–	0.75	
e	0.80 TYP			

Notes:
1. This package conforms to JEDEC reference MS-026, Variation ACB.
2. Dimensions D1 and E1 do not include mold protrusion. Allowable protrusion is 0.25 mm per side. Dimensions D1 and E1 are maximum plastic body size dimensions including mold mismatch.
3. Lead coplanarity is 0.10 mm maximum.

27.3 44J – PLCC

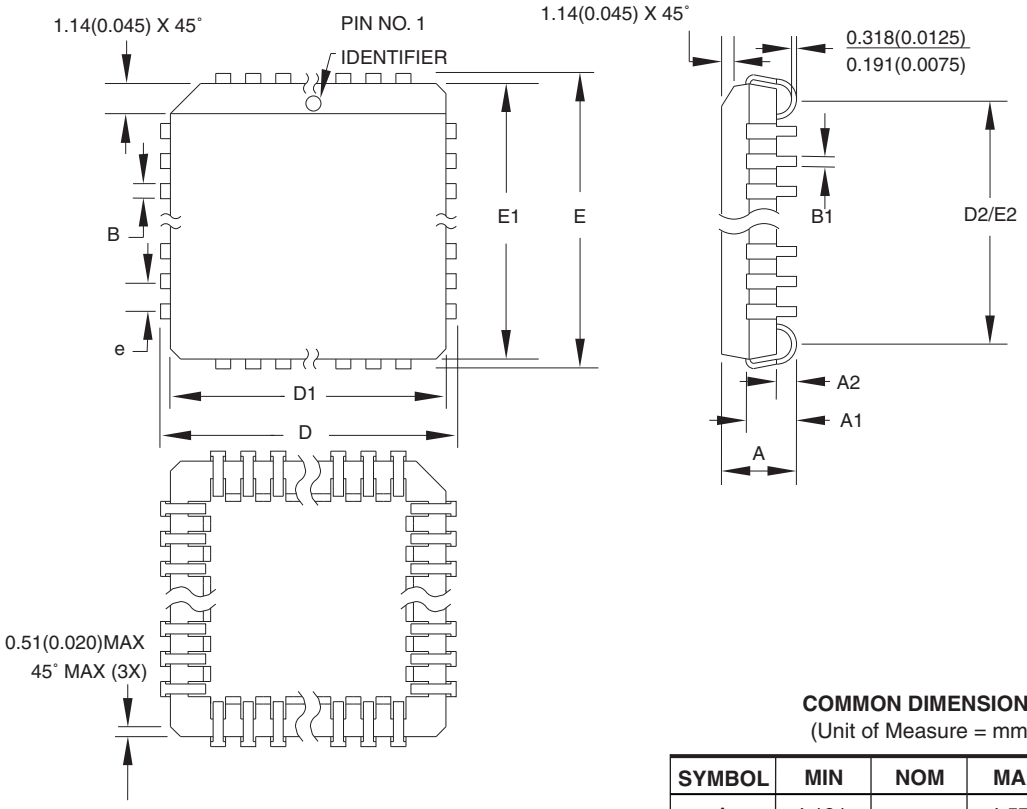

COMMON DIMENSIONS
(Unit of Measure = mm)

SYMBOL	MIN	NOM	MAX	NOTE
A	4.191	–	4.572	
A1	2.286	–	3.048	
A2	0.508	–	–	
D	17.399	–	17.653	
D1	16.510	–	16.662	Note 2
E	17.399	–	17.653	
E1	16.510	–	16.662	Note 2
D2/E2	14.986	–	16.002	
B	0.660	–	0.813	
B1	0.330	–	0.533	
e	1.270 TYP			

Notes:
1. This package conforms to JEDEC reference MS-018, Variation AC.
2. Dimensions D1 and E1 do not include mold protrusion. Allowable protrusion is .010"(0.254 mm) per side. Dimension D1 and E1 include mold mismatch and are measured at the extreme material condition at the upper or lower parting line.
3. Lead coplanarity is 0.004" (0.102 mm) maximum.

10/04/01

	TITLE	DRAWING NO.	REV.
2325 Orchard Parkway San Jose, CA 95131	**44J**, 44-lead, Plastic J-leaded Chip Carrier (PLCC)	44J	B

27.4 44M1 – VQFN/MLF

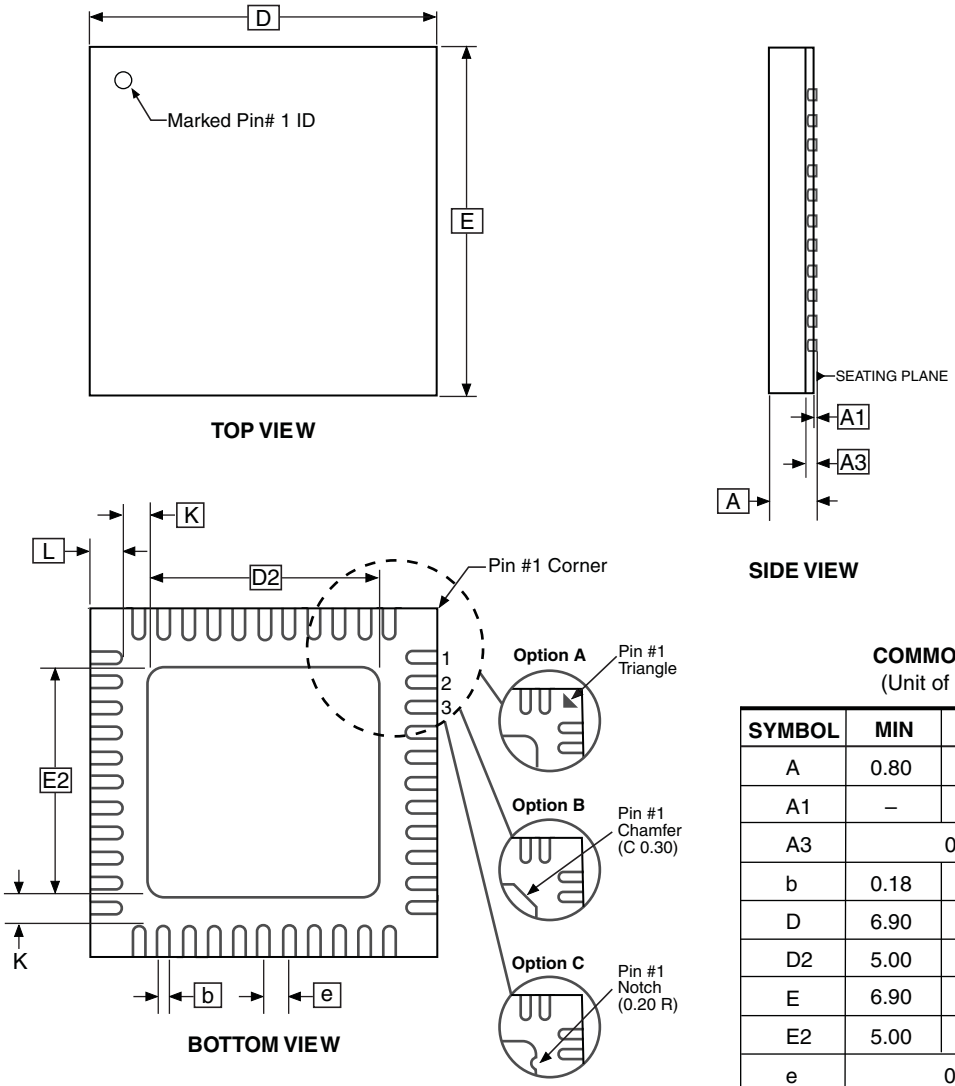

Note: JEDEC Standard MO-220, Fig. 1 (SAW Singulation) VKKD-3.

COMMON DIMENSIONS
(Unit of Measure = mm)

SYMBOL	MIN	NOM	MAX	NOTE
A	0.80	0.90	1.00	
A1	–	0.02	0.05	
A3		0.20 REF		
b	0.18	0.23	0.30	
D	6.90	7.00	7.10	
D2	5.00	5.20	5.40	
E	6.90	7.00	7.10	
E2	5.00	5.20	5.40	
e		0.50 BSC		
L	0.59	0.64	0.69	
K	0.20	0.26	0.41	

9/26/08

	TITLE	GPC	DRAWING NO.	REV.
Package Drawing Contact: packagedrawings@atmel.com	**44M1,** 44-pad, 7 x 7 x 1.0 mm Body, Lead Pitch 0.50 mm, 5.20 mm Exposed Pad, Thermally Enhanced Plastic Very Thin Quad Flat No Lead Package (VQFN)	ZWS	44M1	H

27.5 40P6 – PDIP

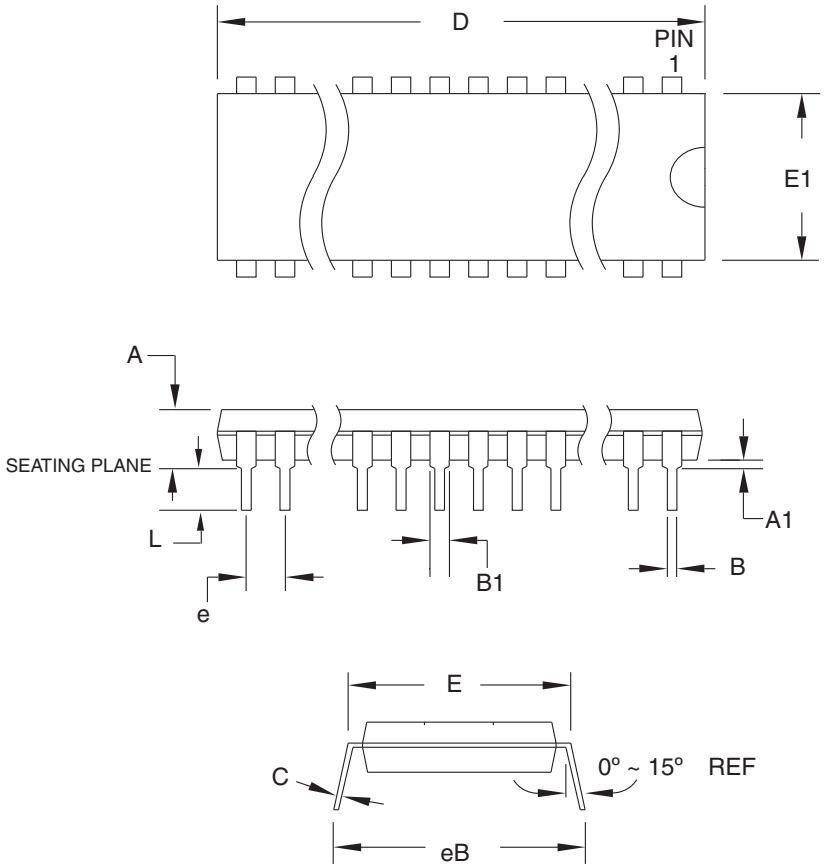

COMMON DIMENSIONS
(Unit of Measure = mm)

SYMBOL	MIN	NOM	MAX	NOTE
A	–	–	4.826	
A1	0.381	–	–	
D	52.070	–	52.578	Note 2
E	15.240	–	15.875	
E1	13.462	–	13.970	Note 2
B	0.356	–	0.559	
B1	1.041	–	1.651	
L	3.048	–	3.556	
C	0.203	–	0.381	
eB	15.494	–	17.526	
e	2.540 TYP			

Notes:
1. This package conforms to JEDEC reference MS-011, Variation AC.
2. Dimensions D and E1 do not include mold Flash or Protrusion. Mold Flash or Protrusion shall not exceed 0.25 mm (0.010").

09/28/01

	TITLE	DRAWING NO.	REV.
2325 Orchard Parkway San Jose, CA 95131	**40P6**, 40-lead (0.600"/15.24 mm Wide) Plastic Dual Inline Package (PDIP)	40P6	B

28. Revision History

Revision No.	History
Revision A – October 2011	• Initial Release

Table of Contents

Features ***1***

1 Pin Configurations ***2***

1.1 44-lead TQFP/LQFP 2

1.2 44-lead PLCC 2

..... ***3***

1.3 44-pad VQFN/QFN/MLF 3

1.4 40-pin PDIP 3

1.5 Pin Description 4

2 Overview ***6***

2.1 Block Diagram 8

2.2 System Configuration 8

2.3 Comparison to the Atmel AT89C51RB2/RC2/IC2 10

3 Memory Organization ***13***

3.1 Program Memory 13

3.2 Internal Data Memory 16

3.3 External Data Memory 17

3.4 Extra RAM (EDATA) 22

3.5 Extended Stack 23

4 Special Function Registers ***24***

5 Enhanced CPU ***31***

5.1 Fast Mode 31

5.2 Compatibility Mode 32

5.3 Multiply–Accumulate Unit (MAC) 32

5.4 Enhanced Dual Data Pointers 35

5.5 Instruction Set Extensions 39

6 System Clock ***41***

6.1 Crystal Oscillator A 42

6.2 External Clock Source A 43

6.3 Internal RC Oscillator 43

6.4 Crystal Oscillator B (AT89LP51IC2) 43

6.5 External Clock Source B (AT89LP51IC2) 44

6.6 Dual Oscillator Support (AT89LP51IC2) 44

Table of Contents (Continued)

6.7 X1/X2 Feature 46
6.8 System Clock Prescaler 47
6.9 Peripheral Clocks 48
6.10 Timer Subclock (AT89L51IC2) 50

7 Reset 51

7.1 Power-on Reset 51
7.2 Brown-out Reset 52
7.3 External Reset 53
7.4 Hardware Watchdog Reset 54
7.5 PCA Watchdog Reset 54
7.6 Software Reset 54

8 Power Saving Modes 55

8.1 Idle Mode 55
8.2 Power-down Mode 56
8.3 Reducing Power Consumption 57
8.4 Low Power Configuration 58

9 Interrupts 59

9.1 Interrupt Priority 59
9.2 Interrupt Response 61
9.3 Interrupt Registers 63

10 External Interrupts 66

11 Keyboard Interface and General-purpose Interrupts 66

11.1 Registers 68

12 I/O Ports 69

12.1 Port Configuration 69
12.2 Port Analog Functions 72
12.3 Port Read-Modify-Write 73
12.4 Port Alternate Functions 73

13 Enhanced Timer 0 and Timer 1 with PWM 77

13.1 Registers 78
13.2 Mode 0 – Variable Width Timer/Counter 80
13.3 Mode 1 – 16-bit Auto-Reload Timer/Counter 81

Table of Contents (Continued)

13.4 Mode 2 – 8-bit Auto-Reload Timer/Counter 82
13.5 Mode 3 – 8-bit Split Timer 82
13.6 Pulse Width Modulation 83

14 Timer 2 87

14.1 Timer 2 Registers 89
14.2 Capture Mode 90
14.3 Auto-Reload Mode 91
14.4 Baud Rate Generator 93
14.5 Frequency Generator (Programmable Clock Out) 94

15 Programmable Counter Array (PCA) 95

15.1 PCA Timer/Counter 95
15.2 PCA Modules 98
15.3 PCA Capture Mode 101
15.4 16-bit Software Timer/ Compare Mode 101
15.5 High Speed Output Mode 102
15.6 Pulse Width Modulator Mode 103
15.7 PCA Watchdog Timer 104

16 Hardware Watchdog Timer 104

16.1 Software Reset 105
16.2 WDT Registers 106

17 Serial Interface (UART) 107

17.1 Multiprocessor Communications 109
17.2 Baud Rates 109
17.3 Framing Error Detection 114
17.4 Automatic Address Recognition 114
17.5 More About Mode 0 116
17.6 More About Mode 1 120
17.7 More About Modes 2 and 3 122

18 Enhanced Serial Peripheral Interface 125

18.1 Interface Description 126
18.2 Master Operation 129
18.3 Slave Operation 129
18.4 Error Conditions 130

18.5 Serial Clock Timing 131
18.6 Registers 132

19 Two-Wire Serial Interface 134

19.1 Data Transfer and Frame Format 135
19.2 Multi-master Bus Systems, Arbitration and Synchronization 137
19.3 Overview of the TWI Module 139
19.4 Register Overview 141
19.5 Using the TWI 142
19.6 Transmission Modes 144

20 Dual Analog Comparators 157

20.1 Analog Input Muxes 158
20.2 Internal Reference Voltage 159
20.3 Comparator Interrupt Debouncing 159

21 Digital-to-Analog/Analog-to-Digital Converter 164

21.1 ADC Operation 166
21.2 Temperature Sensor 167
21.3 DAC Operation 167
21.4 Clock Selection 168
21.5 Starting a Conversion 169
21.6 Noise Considerations 169
21.7 Registers 170

22 Instruction Set Summary 173

22.1 Instruction Set Extensions 177

23 On-Chip Debug System 183

23.1 Physical Interface 183
23.2 Software Breakpoints 184
23.3 Limitations of On-Chip Debug 184

24 Flash Memory Programming 185

24.1 Memory Organization 186
24.2 User Configuration Fuses 188
24.3 Flash Hardware Security 189
24.4 In-Application Programming (IAP) 190
24.5 Bootloader 199

Table of Contents (Continued)

24.6 In-System Programming (ISP) 214

25 Electrical Characteristics 225

25.1 Absolute Maximum Ratings* 225

25.2 DC Characteristics 225

25.3 Typical Characteristics 226

25.4 Clock Characteristics 228

25.5 Reset Characteristics 229

25.6 External Memory Characteristics 229

25.7 Serial Peripheral Interface Timing 231

25.8 Two-wire Serial Interface Characteristics 234

25.9 Serial Port Timing: Shift Register Mode 235

25.10 Dual Analog Comparator Characteristics 236

25.11 DADC Characteristics 236

25.12 Test Conditions 238

26 Ordering Information 241

26.1 Green Package Option (Pb/Halide-free) 241

26.2 Cross Reference with AT89C51RB2/RC2/IC2 242

27 Packaging Information 243

27.1 44AA – VQFP/LQFP 243

27.2 44A – TQFP 244

27.3 44J – PLCC 245

27.4 44M1 – VQFN/MLF 246

27.5 40P6 – PDIP 247

28 Revision History 248

Table of Contents.... i

Atmel Corporation
2325 Orchard Parkway
San Jose, CA 95131
USA
Tel: (+1) (408) 441-0311
Fax: (+1) (408) 487-2600
www.atmel.com
8051@atmel.com

Atmel Asia Limited
Unit 1-5 & 16, 19/F
BEA Tower, Millennium City 5
418 Kwun Tong Road
Kwun Tong, Kowloon
HONG KONG
Tel: (+852) 2245-6100
Fax: (+852) 2722-1369

Atmel Munich GmbH
Business Campus
Parkring 4
BP 309
D-85748 Garching b. Munich
GERMANY
Tel: (+49) 89-31970-0
Fax: (+49) 89-3194621

Atmel Japan
9F, Tonetsu Shinkawa Bldg.
1-24-8 Shinkawa
Chuo-ku, Tokyo 104-0033
JAPAN
Tel: (+81) (3) 3523-3551
Fax: (+81) (3) 3523-7581

© 2011 Atmel Corporation. All rights reserved.

Atmel®, Atmel logo and combinations thereof, and others are registered trademarks or trademarks of Atmel Corporation or its subsidiaries. Other terms and product names may be trademarks of others.

Disclaimer: The information in this document is provided in connection with Atmel products. No license, express or implied, by estoppel or otherwise, to any intellectual property right is granted by this document or in connection with the sale of Atmel products. **EXCEPT AS SET FORTH IN ATMEL'S TERMS AND CONDITIONS OF SALE LOCATED ON ATMEL'S WEB SITE, ATMEL ASSUMES NO LIABILITY WHATSOEVER AND DISCLAIMS ANY EXPRESS, IMPLIED OR STATUTORY WARRANTY RELATING TO ITS PRODUCTS INCLUDING, BUT NOT LIMITED TO, THE IMPLIED WARRANTY OF MERCHANTABILITY, FITNESS FOR A PARTICULAR PURPOSE, OR NON-INFRINGEMENT. IN NO EVENT SHALL ATMEL BE LIABLE FOR ANY DIRECT, INDIRECT, CONSEQUENTIAL, PUNITIVE, SPECIAL OR INCIDENTAL DAMAGES (INCLUDING, WITHOUT LIMITATION, DAMAGES FOR LOSS OF PROFITS, BUSINESS INTERRUPTION, OR LOSS OF INFORMATION) ARISING OUT OF THE USE OR INABILITY TO USE THIS DOCUMENT, EVEN IF ATMEL HAS BEEN ADVISED OF THE POSSIBILITY OF SUCH DAMAGES.** Atmel makes no representations or warranties with respect to the accuracy or completeness of the contents of this document and reserves the right to make changes to specifications and product descriptions at any time without notice. Atmel does not make any commitment to update the information contained herein. Unless specifically provided otherwise, Atmel products are not suitable for, and shall not be used in, automotive applications. Atmel's products are not intended, authorized, or warranted for use as components in applications intended to support or sustain life.

3722A–MICRO–10/11

Mouser Electronics

Authorized Distributor

Click to View Pricing, Inventory, Delivery & Lifecycle Information:

Microchip:

AT89LP51IC2-20AAU AT89LP51IC2-20JU AT89LP51IC2-20MU AT89LP51RB2-20AAU AT89LP51RB2-20AU AT89LP51RB2-20JU AT89LP51RB2-20MU AT89LP51RC2-20AAU AT89LP51RC2-20AU AT89LP51RC2-20JU AT89LP51RC2-20MU AT89LP51RC2-20AUR