Features

- Compatible with MCS®51 Products
- 20 MIPS Throughput at 20 MHz Clock Frequency and 2.4V, 85°C Operating Conditions
- Single Clock Cycle per Byte Fetch
- 2/4K Bytes of In-System Programmable (ISP) Flash Memory
  - Serial Interface for Program Downloading
  - 32-byte Fast Page Programming Mode
  - 32-byte User Signature Array
- 2.4V to 5.5V V_{CC} Operating Range
- Fully Static Operation: 0 Hz to 20 MHz
- 2-level Program Memory Lock
- 256 x 8 Internal RAM
- Hardware Multiplier
- 15 Programmable I/O Lines
- Configurable I/O with Quasi-bidirectional, Input, Push-pull Output, and Open-drain Modes
- Enhanced UART with Automatic Address Recognition and Framing Error Detection
- Enhanced SPI with Double-buffered Send/Receive
- Programmable Watchdog Timer with Software Reset
- 4-level Interrupt Priority
- Analog Comparator with Selectable Interrupt and Debouncing
- Two 16-bit Enhanced Timer/Counters with 8-bit PWM
- Brown-out Detector and Power-off Flag
- Internal Power-on Reset
- Low Power Idle and Power-down Modes
- Interrupt Recovery from Power-down Mode

8-bit Microcontroller with 2/4-Kbyte Flash

AT89LP2052
AT89LP4052

1. Description

The AT89LP2052/LP4052 is a low-power, high-performance CMOS 8-bit microcontroller with 2/4K bytes of In-System Programmable Flash memory. The device is manufactured using Atmel's high-density nonvolatile memory technology and is compatible with the industry-standard MCS-51 instruction set. The AT89LP2052/LP4052 is built around an enhanced CPU core that can fetch a single byte from memory every clock cycle. In the classic 8051 architecture, each fetch required 6 clock cycles, forcing instructions to execute in 12, 24 or 48 clock cycles. In the AT89LP2052/LP4052 CPU, instructions need only 1 to 4 clock cycles providing 6 to 12 times more throughput than the standard 8051. Seventy percent of instructions need only as many clock cycles as they have bytes to execute, and most of the remaining instructions require only one additional clock. The enhanced CPU core is capable of 20 MIPS throughput whereas the classic 8051 CPU can deliver only 4 MIPS at the same current consumption. Conversely, at the same throughput as the classic 8051, the new CPU core runs at a much lower speed and thereby greatly reduces power consumption.

3547J–MICRO–10/09

The two timer/counters in the AT89LP2052/LP4052 are enhanced with two new modes. Mode 0 can be configured as a variable 9- to 16-bit timer/counter and Mode 1 can be configured as a 16-bit auto-reload timer/counter. In addition both timer/counters may be configured as 8-bit Pulse Width Modulators with 8-bit prescalers.

The I/O ports of the AT89LP2052/LP4052 can be independently configured in one of four operating modes. In quasi-bidirectional mode, the ports operate as in the classic 8051. In input mode, the ports are tri-stated. Push-pull output mode provides full CMOS drivers and open-drain mode provides just a pull-down.

2. Pin Configuration

2.1 20-lead PDIP/SOIC/TSSOP

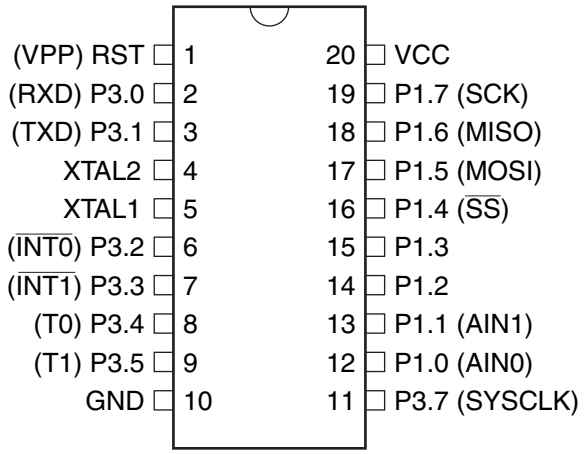

3. Pin Description

Pin	Symbol	Type	Description
1	RST	I I	**RST**: External **Active-High** Reset input. **VPP**: Parallel Programming Voltage. Raise to 12V to enable programming.
2	P3.0	I/O I	**P3.0**: User-configurable I/O Port 3 bit 0. **RXD**: Serial Port Receiver input.
3	P3.1	I/O O	**P3.1**: User-configurable I/O Port 3 bit 1. **TXD**: Serial Port Transmitter output.
4	XTAL2	O	**XTAL2**: Output from inverting oscillator amplifier.
5	XTAL1	I	**XTAL1**: Input to the inverting oscillator amplifier and internal clock generation circuits.
6	P3.2	I/O I	**P3.2**: User-configurable I/O Port 3 bit 2. **INT0**: External Interrupt 0 input.
7	P3.3	I/O I	**P3.3**: User-configurable I/O Port 3 bit 3. **INT1**: External Interrupt 1input.
8	P3.4	I/O I/O	**P3.4**: User-configurable I/O Port 3 bit 4. **T0**: Timer 0 Counter input or PWM output
9	P3.5	I/O I/O	**P3.5**: User-configurable I/O Port 3 bit 5. **T1**: Timer 1 Counter input or PWM output
10	GND	I	Ground
11	P3.7	I/O O	**P3.7**: User-configurable I/O Port 3 bit 7. **SYSCLK**: System Clock Output when System Clock Fuse is enabled.
12	P1.0	I/O I	**P1.0**: User-configurable I/O Port 1 bit 0. **AIN0**: Analog Comparator Positive input.
13	P1.1	I/O I	**P1.1**: User-configurable I/O Port 1 bit 1. **AIN1**: Analog Comparator Negative input.
14	P1.2	I/O	**P1.2**: User-configurable I/O Port 1 bit 2.
15	P1.3	I/O	**P1.3**: User-configurable I/O Port 1 bit 3
16	P1.4	I/O I	**P1.4**: User-configurable I/O Port 1 bit 4. **$\overline{\text{SS}}$**: SPI slave select.
17	P1.5	I/O I/O	**P1.5**: User-configurable I/O Port 1 bit 5. **MOSI**: SPI master-out/slave-in. When configured as master, this pin is an output. When configured as slave, this pin is an input.
18	P1.6	I/O I/O	**P1.6**: User-configurable I/O Port 1 bit 6. **MISO**: SPI master-in/slave-out. When configured as master, this pin is an input. When configured as slave, this pin is an output.
19	P1.7	I/O I/O	**P1.7**: User-configurable I/O Port 1 bit 7. **SCK**: SPI Clock. When configured as master, this pin is an output. When configured as slave, this pin is an input.
20	VCC	I	Supply Voltage

4. Block Diagram

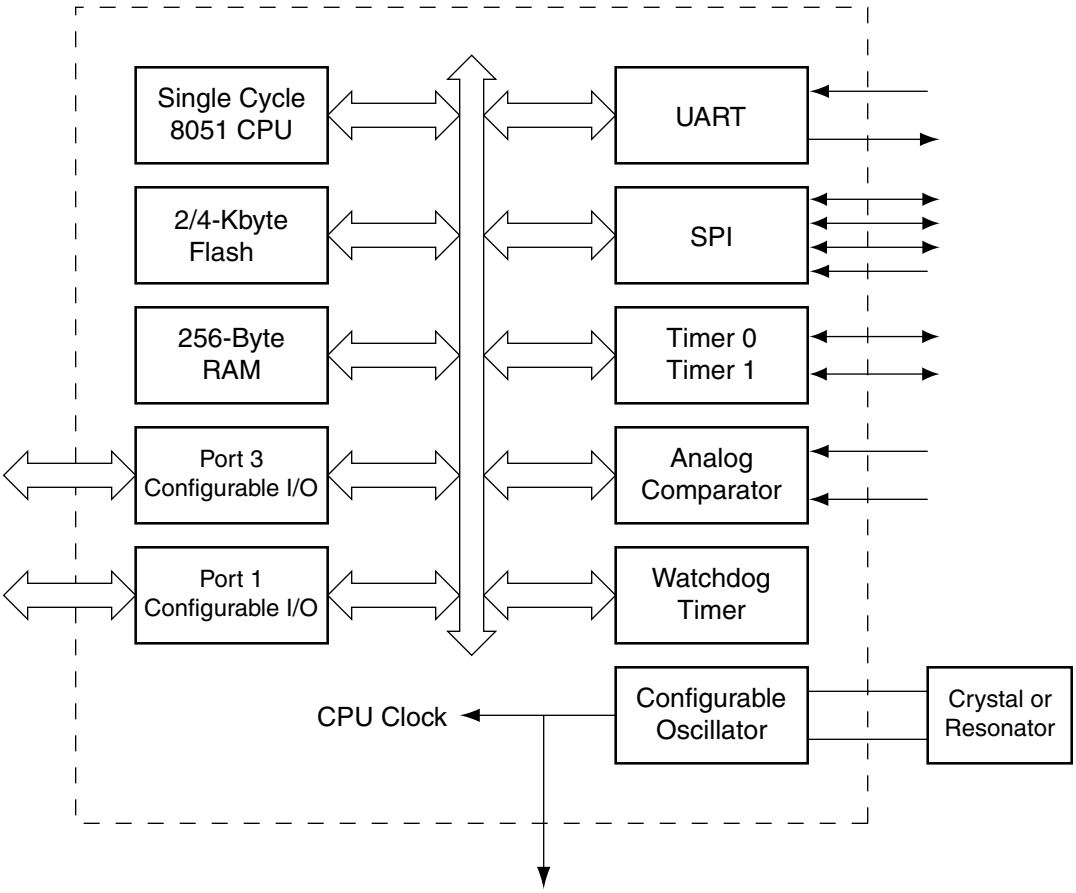

5. Memory Organization

The AT89LP2052/LP4052 uses a Harvard Architecture with separate address spaces for program and data memory. The program memory has a regular linear address space with support for up to 64K bytes of directly addressable application code. The data memory has 256 bytes of internal RAM which is divided into regions that may be accessed by different instruction classes. The AT89LP2052/LP4052 does not support external RAM.

5.1 Program Memory

The AT89LP2052/LP4052 contains 2/4K bytes of on-chip In-System Programmable Flash memory for program storage. The Flash memory has an endurance of at least 10,000 write/erase cycles. Section 23. “Programming the Flash Memory” on page 57 contains a detailed description on Flash Programming in ISP or Parallel Programming mode. The reset and interrupt vectors are located within the first 59 bytes of program memory (see Section 14. “Interrupts” on page 16). Constant tables can be allocated within the entire 2/4-Kbyte program memory address space for access by the MOVC instruction.

Figure 5-1. Program Memory Map

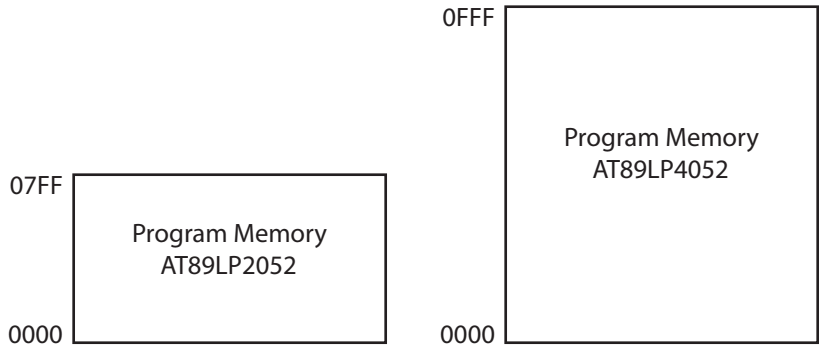

5.2 Data Memory

The AT89LP2052/LP4052 contains 256 bytes of general SRAM data memory plus 128 bytes of I/O memory. The lower 128 bytes of data memory may be accessed through both direct and indirect addressing. The upper 128 bytes of data memory and the 128 bytes of I/O memory share the same address space (see Figure 5-2). The upper 128 bytes of data memory may only be accessed using indirect addressing. The I/O memory can only be accessed through direct addressing and contains the Special Function Registers (SFRs). The lowest 32 bytes of data memory are grouped into 4 banks of 8 registers each. The RS0 and RS1 bits (PSW.3 and PSW.4) select which register bank is in use. Instructions using register addressing will only access the currently specified bank. The AT89LP2052/LP4052 does not support external data memory.

Figure 5-2. Data Memory Map

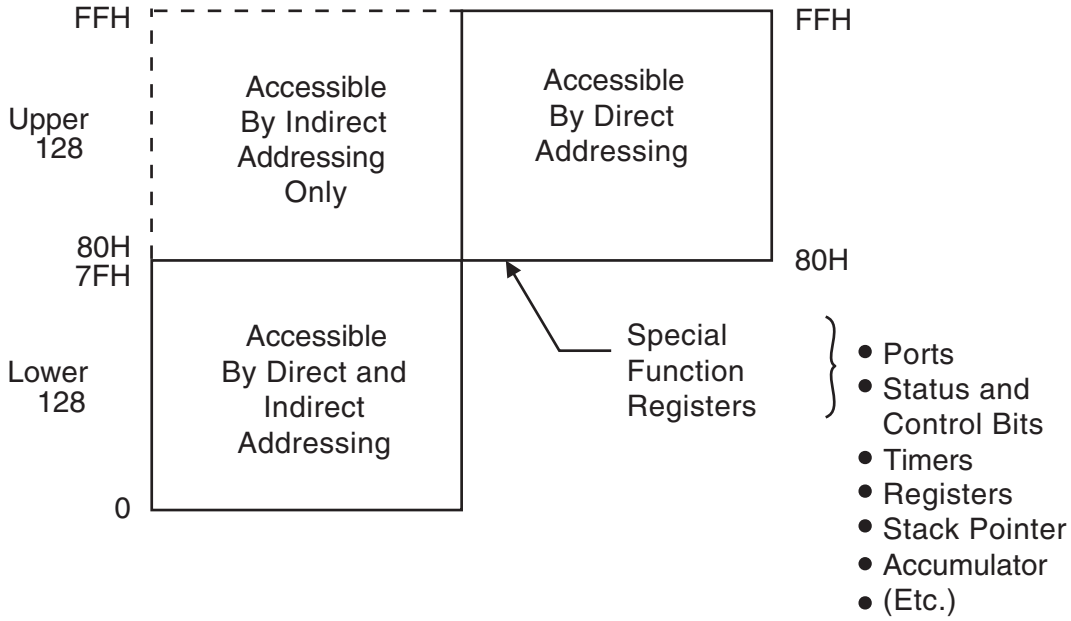

6. Special Function Registers

A map of the on-chip memory area called the Special Function Register (SFR) space is shown in Table 6-1.

Note that not all of the addresses are occupied, and unoccupied addresses may not be implemented on the chip. Read accesses to these addresses will in general return random data, and write accesses will have an indeterminate effect. User software should not write to these unlisted locations, since they may be used in future products to invoke new features.

Table 6-1. AT89LP2052/LP4052 SFR Map and Reset Values

0F8H									0FFH
0F0H	B* 0000 0000								0F7H
0E8H									0EFH
0E0H	ACC* 0000 0000								0E7H
0D8H									0DFH
0D0H	PSW* 0000 0000					SPCR 0000 0000			0D7H
0C8H									0CFH
0C0H			P1M0 1111 1111	P1M1 0000 0000			P3M0 1111 1111	P3M1 0000 0000	0C7H
0B8H	IP* x0x0 0000	SADEN 0000 0000							0BFH
0B0H	P3* 1111 1111							IPH x0x0 0000	0B7H
0A8H	IE* 00x0 0000	SADDR 0000 0000	SPSR 000x xx00						0AFH
0A0H							WDTRST (write-only)	WDTCON 0000 x000	0A7H
98H	SCON* 0000 0000	SBUF xxxx xxxx							9FH
90H	P1* 1111 1111	TCONB 0010 0100	RL0 0000 0000	RL1 0000 0000	RH0 0000 0000	RH1 0000 0000		ACSR xx00 0000	97H
88H	TCON* 0000 0000	TMOD 0000 0000	TL0 0000 0000	TL1 0000 0000	TH0 0000 0000	TH1 0000 0000			8FH
80H		SP 0000 0111	DPL 0000 0000	DPH 0000 0000			SPDR xxxx xxxx	PCON 000x 0000	87H

Note: *These SFRs are bit-addressable.

7. Comparison to Standard 8051

The AT89LP2052/LP4052 is part of a family of devices with enhanced features that are fully binary compatible with the MCS-51 instruction set. In addition, most SFR addresses, bit assignments, and pin alternate functions are identical to Atmel's existing standard 8051 products. However, due to the high performance nature of the device, some system behaviors are different from those of Atmel's standard 8051 products such as AT89S52 or AT89S2051. The differences from the standard 8051 are outlined in the following paragraphs.

7.1 System Clock

The CPU clock frequency equals the external XTAL1 frequency. The oscillator is no longer divided by 2 to provide the internal clock, and x2 mode is not supported.

7.2 Instruction Execution with Single-cycle Fetch

The CPU fetches one code byte from memory every clock cycle instead of every six clock cycles. This greatly increases the throughput of the CPU. As a consequence, the CPU no longer executes instructions in 12 to 48 clock cycles. Each instruction executes in only 1 to 4 clock cycles. See Section 22. “Instruction Set Summary” on page 52 for more details.

7.3 Interrupt Handling

The interrupt controller polls the interrupt flags during the last clock cycle of any instruction. In order for an interrupt to be serviced at the end of an instruction, its flag needs to have been latched as active during the next to last clock cycle of the instruction, or in the last clock cycle of the previous instruction if the current instruction executes in only a single clock cycle.

7.4 Timer/Counters

The Timer/Counters increment at a rate of once per clock cycle. This compares to once every 12 clocks in the standard 8051.

7.5 Serial Port

The baud rate of the UART in Mode 0 is 1/2 the clock frequency, compared to 1/12 the clock frequency in the standard 8051. In should also be noted that when using Timer 1 to generate the baud rate in Mode 1 or Mode 3, the timer counts at the clock frequency and not at 1/12 the clock frequency. To maintain the same baud rate in the AT89LP2052/LP4052 while running at the same frequency as a standard 8051, the time-out period must be 12 times longer. Mode 1 of Timer 1 supports 16-bit auto-reload to facilitate longer time-out periods for generating low baud rates.

7.6 Watchdog Timer

The Watchdog Timer in AT89LP2052/LP4052 counts at a rate of once per clock cycle. This compares to once every 12 clocks in the standard 8051.

7.7 I/O Ports

The I/O ports of the AT89LP2052/LP4052 may be configured in four different modes. On the AT89LP2052/LP4052, all the I/O ports revert to input-only (tri-stated) mode at power-up or reset. In the standard 8051, all ports are weakly pulled high during power-up or reset. To enable 8051-like ports, the ports must be put into quasi-bidirectional mode by clearing the P1M0 and P3M0 SFRs.

7.8 Reset

The RST pin in the AT89LP2052/LP4052 has different pulse width requirements than the standard 8051. The RST pin is sampled every clock cycle and must be held **high** for a minimum of two clock cycles, instead of 24 clock cycles, to be recognized as a valid reset pulse

8. Enhanced CPU

The AT89LP2052/LP4052 uses an enhanced 8051 CPU that runs at 6 to 12 times the speed of standard 8051 devices (or 3 to 6 times the speed of X2-mode 8051 devices). The increase in performance is due to two factors. First, the CPU fetches one instruction byte from the code memory every clock cycle. Second, the CPU uses a simple two-stage pipeline to fetch and execute instructions in parallel. This basic pipelining concept allows the CPU to obtain up to 1 MIPS per MHz. A simple example is shown in Figure 8-1.

The MCS-51 instruction set allows for instructions of variable length from 1 to 3 bytes. In a single-clock-per-byte-fetch system this means each instruction takes at least as many clocks as it has bytes to execute. A majority of the instructions in the AT89LP2052/LP4052 follow this rule: the instruction execution time in clock cycles equals the number of bytes per instruction with a few exceptions. Branches and Calls require an additional cycle to compute the target address and some other complex instructions require multiple cycles. See Section 22. “Instruction Set Summary” on page 52 for more detailed information on individual instructions. Figures 8-2 and 8-3 show examples of one- and two-byte instructions.

Figure 8-1. Parallel Instruction Fetches and Executions

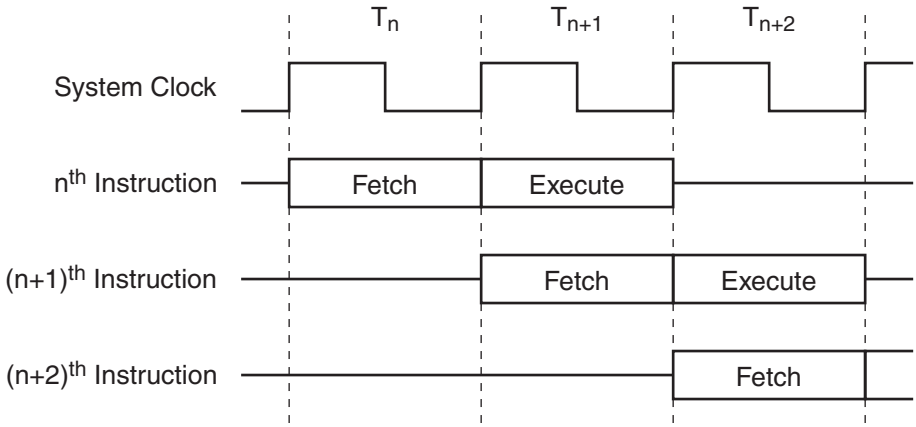

Figure 8-2. Single-cycle ALU Operation (Example: INC R0)

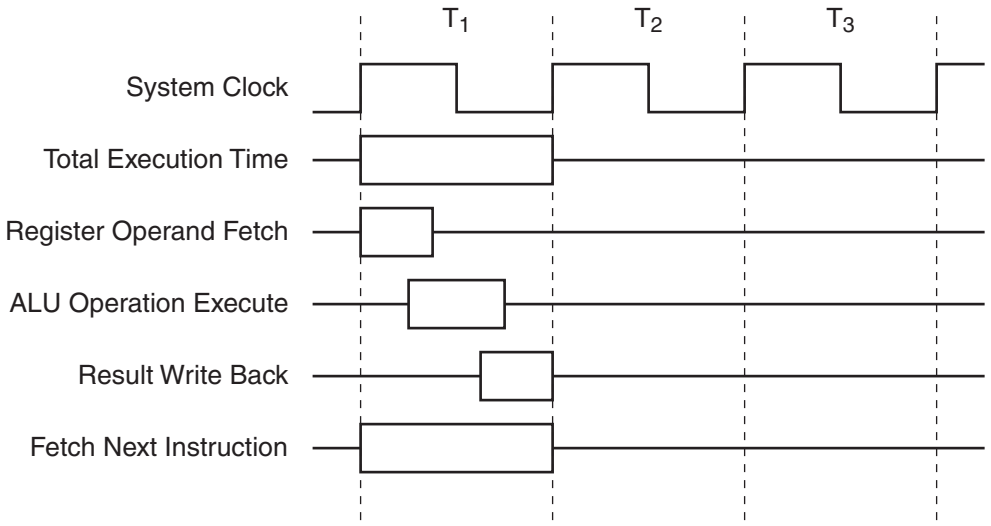

Figure 8-3. Two-Cycle ALU Operation (Example: ADD A, #data)

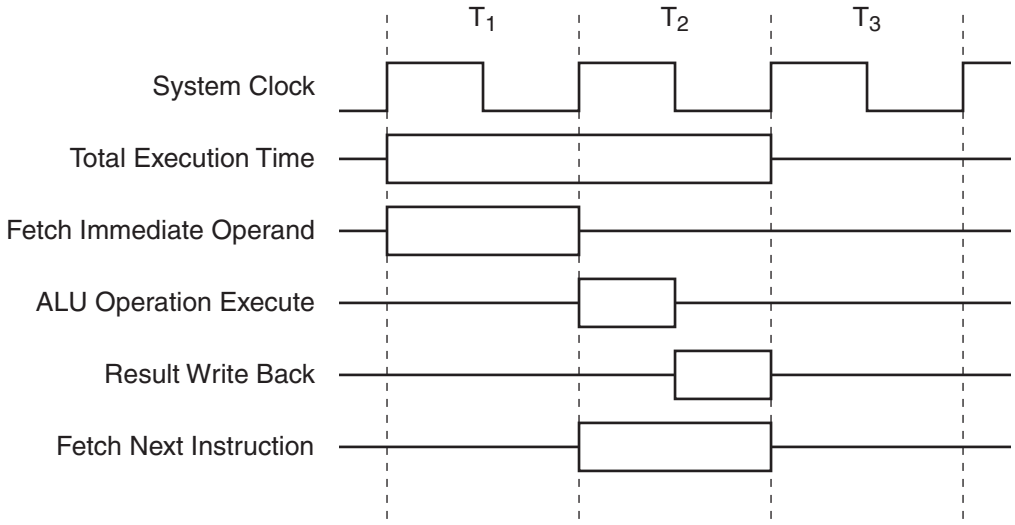

9. Restrictions on Certain Instructions

The AT89LP2052/LP4052 is an economical and cost-effective member of Atmel's growing family of microcontrollers. It contains 2/4K bytes of Flash program memory. It is fully compatible with the MCS-51 architecture, and can be programmed using the MCS-51 instruction set. However, there are a few considerations one must keep in mind when utilizing certain instructions to program this device. All the instructions related to jumping or branching should be restricted such that the destination address falls within the physical program memory space of the device, which is 2K bytes for the AT89LP2052 and 4K bytes for the AT89LP4052. This should be the responsibility of the software programmer. For example, LJMP 7E0H would be a valid instruction for the AT89LP2052 (with 2K bytes of memory), whereas LJMP 900H would not.

9.1 Branching Instructions

The LCALL, LJMP, ACALL, AJMP, SJMP, and JMP @A+DPTR unconditional branching instructions will execute correctly as long as the programmer keeps in mind that the destination branching address must fall within the physical boundaries of the program memory size (locations 000H to 7FFH for the AT89LP2052, 000H to FFFH for the AT89LP4052). Violating the physical space limits may cause unknown program behavior. With the CJNE [...], DJNZ [...], JB, JNB, JC, JNC, JBC, JZ, and JNZ conditional branching instructions, the same previous rule applies. Again, violating the memory boundaries may cause erratic execution. For applications involving interrupts, the normal interrupt service routine address locations of the 8051 family architecture have been preserved.

9.2 MOVX-related Instructions, Data Memory

External DATA memory access is not supported in this device, nor is external PROGRAM memory execution. Therefore, no MOVX [...] instructions should be included in the program. A typical 8051 assembler will still assemble instructions, even if they are written in violation of the restrictions mentioned above. It is the responsibility of the user to know the physical features and limitations of the device being used and to adjust the instructions used accordingly.

10. System Clock

The system clock is generated directly from one of two selectable clock sources. The two sources are the on-chip crystal oscillator and external clock source. No internal clock division is used to generate the CPU clock from the system clock.

10.1 Crystal Oscillator

When enabled, the internal inverting oscillator amplifier is connected between XTAL1 and XTAL2 for connection to an external quartz crystal or ceramic resonator. When using the crystal oscillator, XTAL2 should not be used to drive a board-level clock.

10.2 External Clock Source

The external clock option is selected by setting the Oscillator Bypass fuse. This disables the amplifier and allows XTAL1 to be driven directly by the clock source. XTAL2 may be left unconnected.

10.3 System Clock Out

When the System Clock Out fuse is enabled, P3.7 will output the system clock with no division using the push-pull output mode. During Power-down the system clock will output as “1”.

11. Oscillator Characteristics

XTAL1 and XTAL2 are the input and output, respectively, of an inverting amplifier that can be configured for use as an on-chip oscillator, as shown in Figure 11-1. Either a quartz crystal or ceramic resonator may be used. For frequencies above 16MHz it is recommended that C1 be replaced with R1 for improved startup performance. Note that the internal structure of the devices adds about 10 pF of capacitance to both XTAL1 and XTAL2. The total capacitance on XTAL1 or XTAL2, including the external load capacitor (C1/C2) plus internal device load, board trace and crystal loadings, should not exceed 20 pF. Figure 11-2, 11-3, 11-4 and 11-5 illustrate the relationship between clock loading and the respective resulting clock amplitudes.

Figure 11-1. Oscillator Connections

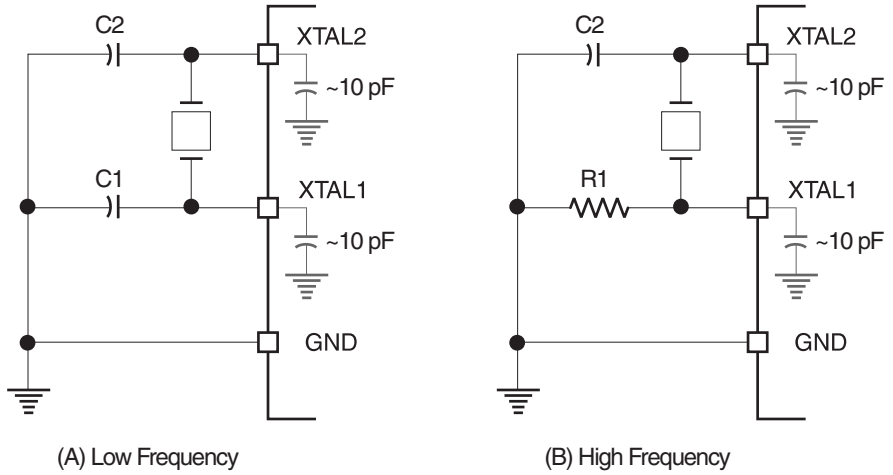

Note: C1, C2 = 0–10 pF for Crystals
= 0–10 pF for Ceramic Resonators
R1 = 4–5 MΩ

Figure 11-2. Quartz Crystal Clock Source (A)

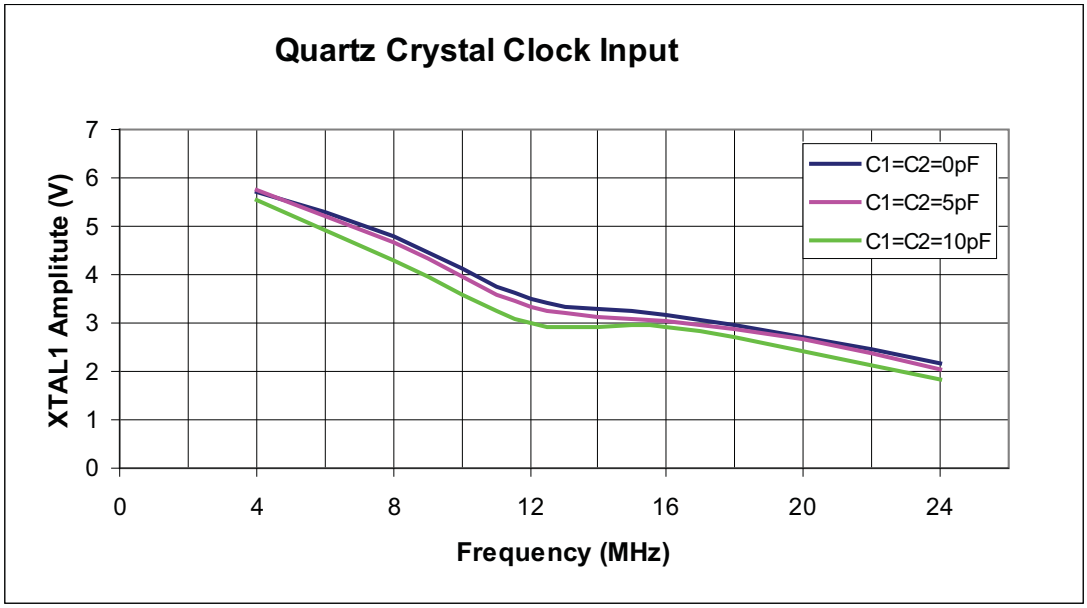

Figure 11-3. Quartz Crystal Clock Source (B)

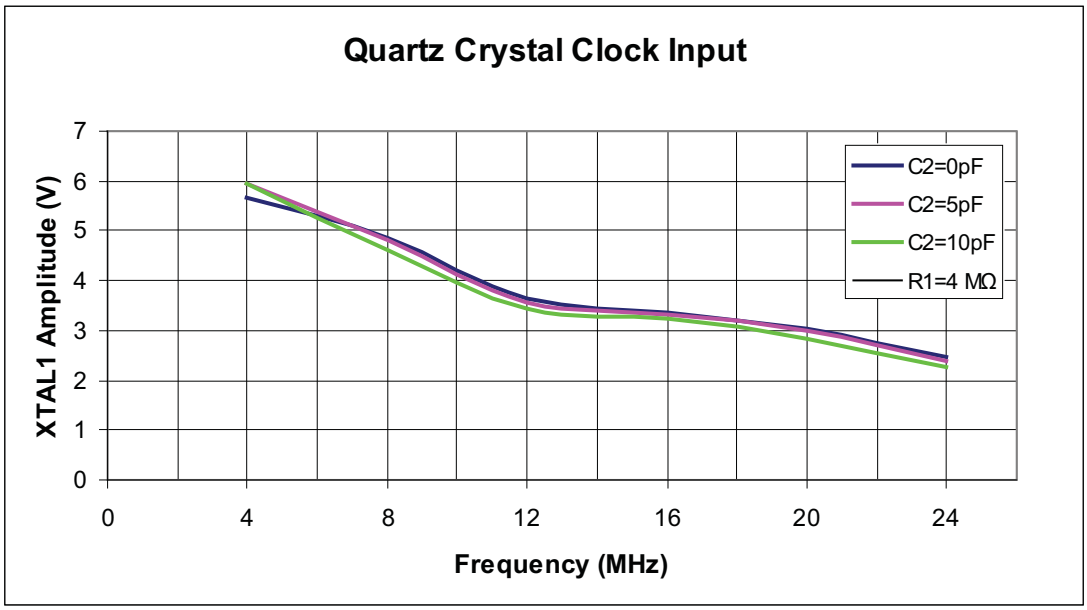

Figure 11-4. Ceramic Resonator Clock Source (A)

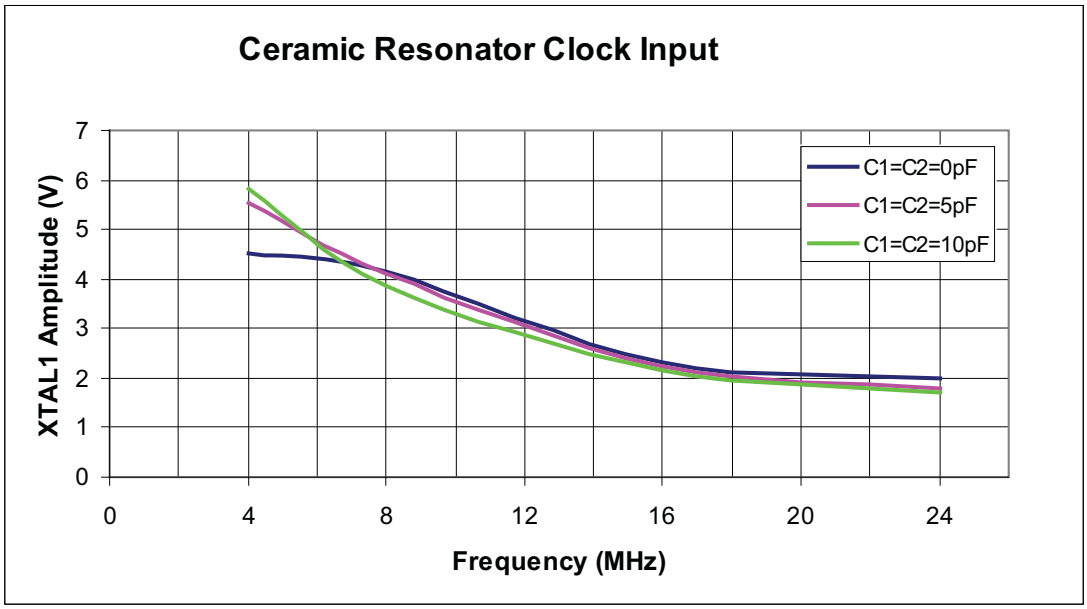

Figure 11-5. Ceramic Resonator Clock Source (B)

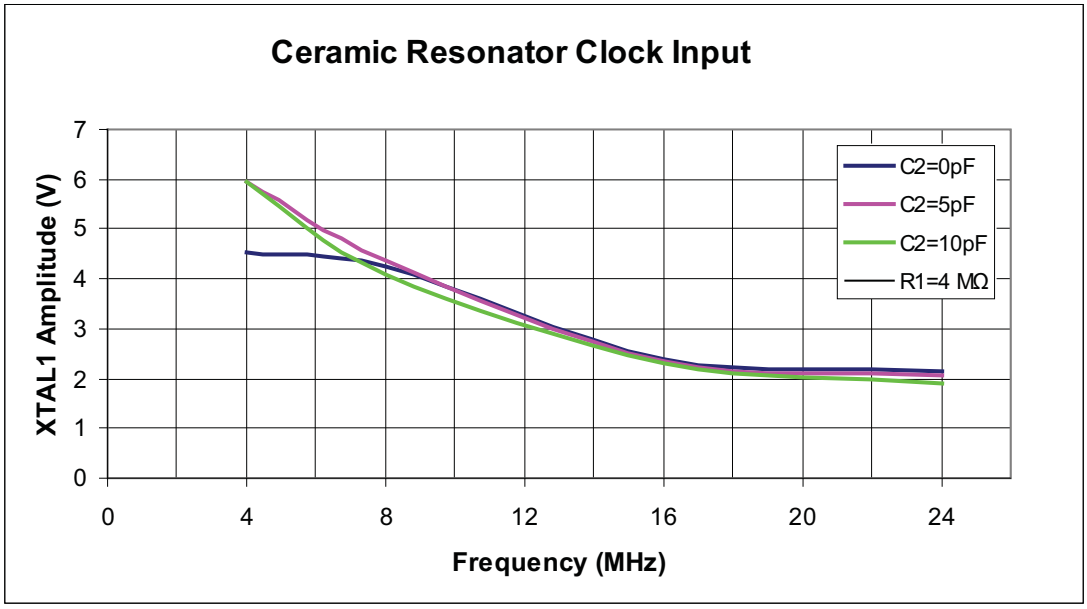

To drive the device from an external clock source, XTAL2 should be left unconnected while XTAL1 is driven, as shown in Figure 11-6.

Figure 11-6. External Clock Drive Configuration

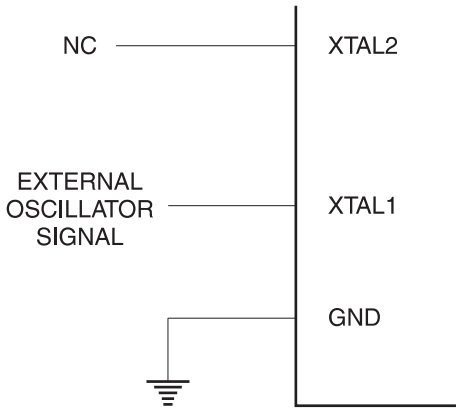

12. Reset

During reset, all I/O Registers are set to their initial values, the port pins are tri-stated, and the program starts execution from the Reset Vector, 0000H. The AT89LP2052/LP4052 has four sources of reset: power-on reset, brown-out reset, external reset, and watchdog reset.

12.1 Power-on Reset

A Power-on Reset (POR) is generated by an on-chip detection circuit. The detection level is nominally 1.4V. The POR is activated whenever V_{CC} is below the detection level. The POR circuit can be used to trigger the start-up reset or to detect a supply voltage failure in devices without a brown-out detector. The POR circuit ensures that the device is reset from power-on. When V_{CC} reaches the Power-on Reset threshold voltage, the POR delay counter determines how long the device is kept in POR after V_{CC} rise. The POR signal is activated again, without any delay, when V_{CC} falls below the POR threshold level. A Power-on Reset (i.e. a cold reset) will set the POF flag in PCON.

12.2 Brown-out Reset

The AT89LP2052/LP4052 has an on-chip Brown-out Detection (BOD) circuit for monitoring the V_{CC} level during operation by comparing it to a fixed trigger level. The trigger level for the BOD is nominally 2.2V. The purpose of the BOD is to ensure that if V_{CC} fails or dips while executing at speed, the system will gracefully enter reset without the possibility of errors induced by incorrect execution. When V_{CC} decreases to a value below the trigger level, the Brown-out Reset is immediately activated. When V_{CC} increases above the trigger level, the BOD delay counter starts the MCU after the time-out period has expired.

12.3 External Reset

The RST pin functions as an active-high reset input. The pin must be held high for at least two clock cycles to trigger the internal reset. RST also serves as the In-System Programming (ISP) enable. ISP is enabled when the external reset pin is held high and the ISP Enable fuse is enabled.

12.4 Watchdog Reset

When the Watchdog times out, it will generate an internal reset pulse lasting 16 clock cycles. Watchdog reset will also set the WDTOVF flag in WDTCON. To prevent a Watchdog reset, the watchdog reset sequence 1EH/E1H must be written to WDTRST before the Watchdog times out. A Watchdog reset will occur only if the Watchdog has been enabled. The Watchdog is disabled by default after any reset and must always be re-enabled if needed.

13. Power Saving Modes

The AT89LP2052/LP4052 supports two different power-reducing modes: Idle and Power-down. These modes are accessed through the PCON register.

13.1 Idle Mode

Setting the IDL bit in PCON enters Idle mode. Idle mode halts the internal CPU clock. The CPU state is preserved in its entirety, including the RAM, stack pointer, program counter, program status word, and accumulator. The Port pins hold the logic states they had at the time that Idle was activated. Idle mode leaves the peripherals running in order to allow them to wake up the CPU when an interrupt is generated. The Timer, UART and SPI blocks continue to function during Idle. The comparator and watchdog may be selectively enabled or disabled during Idle. Any enabled interrupt source or reset may terminate Idle mode. When exiting Idle mode with an interrupt, the interrupt will immediately be serviced, and following RETI the next instruction to be executed will be the one following the instruction that put the device into Idle.

13.2 Power-down Mode

Setting the Power-down (PD) bit in PCON enters Power-down mode. Power-down mode stops the oscillator and powers down the Flash memory in order to minimize power consumption. Only the power-on circuitry will continue to draw power during Power-down. During Power-down, the power supply voltage may be reduced to the RAM keep-alive voltage. The RAM contents will be retained, but the SFR contents are not guaranteed once V_{CC} has been reduced. Power-down may be exited by external reset, power-on reset, or certain interrupts.

The user should not attempt to enter (or re-enter) the power-down mode for a minimum of 4 µs until after one of the following conditions has occurred: Start of code execution (after any type of reset), or Exit from power-down mode.

13.2.1 Interrupt Recovery from Power-down

Two external interrupts may be configured to terminate Power-down mode. Pins P3.2 and P3.3 may be used to exit Power-down through external interrupts $\overline{INT0}$ and $\overline{INT1}$. To wake up by external interrupts $\overline{INT0}$ or $\overline{INT1}$, that interrupt must be enabled and configured for level-sensitive operation. If configured as inputs, $\overline{INT0}$ and $\overline{INT1}$ should not be left floating during Power-down even if interrupt recovery is not used.

When terminating Power-down by an interrupt, two different wake-up modes are available. When PWDEX in PCON is zero, the wake-up period is internally timed. At the falling edge on the interrupt pin, Power-down is exited, the oscillator is restarted, and an internal timer begins counting. The internal clock will not be allowed to propagate to the CPU until after the timer has counted for nominally 2 ms. After the time-out period the interrupt service routine will begin. The interrupt pin may be held low until the device has timed out and begun executing, or it may return high before the end of the time-out period. If the pin remains low, the service routine should disable the interrupt before returning to avoid re-triggering the interrupt.

When PWDEX = “1”, the wake-up period is controlled externally by the interrupt. Again, at the falling edge on the interrupt pin, Power-down is exited and the oscillator is restarted. However, the internal clock will not propagate until the rising edge of the interrupt pin. The interrupt should be held low long enough for the selected clock source to stabilize.

13.2.2 Reset Exit from Power-down

The wake-up from Power-down through an external reset is similar to the interrupt with PWDEX = “0”. At the rising edge of RST, Power-down is exited, the oscillator is restarted, and an internal timer begins counting. The internal clock will not be allowed to propagate to the CPU until after the timer has counted for nominally 2 ms. The RST pin must be held high for longer than the time-out period to ensure that the device is reset properly. The device will begin executing once RST is brought back low.

Table 13-1. PCON – Power Control Register

PCON = 87H — Reset Value = 000X 0000B

Not Bit Addressable

	SMOD1	SMOD0	PWDEX	POF	GF1	GF0	PD	IDL
Bit	7	6	5	4	3	2	1	0

Symbol	Function
SMOD1	Double Baud Rate bit. Doubles the baud rate of the UART in Modes 1, 2, or 3.
SMOD0	Frame Error Select. When SMOD0 = 1, SCON.7 is SM0. When SMOD0 = 1, SCON.7 is FE. Note that FE will be set after a frame error regardless of the state of SMOD0.
PWDEX	Power-down Exit Mode. When PWDEX = 1, wake up from Power-down is externally controlled. When PWDEX = 0, wake up from Power-down is internally timed.
POF	Power Off Flag. POF is set to “1” during power up (i.e. cold reset). It can be set or reset under software control and is not affected by RST or BOD (i.e. warm resets).
GF1, GF0	General-purpose Flags
PD	Power-down bit. Setting this bit activates power-down operation.
IDL	Idle Mode bit. Setting this bit activates Idle mode operation

14. Interrupts

The AT89LP2052/LP4052 provides 6 interrupt sources: two external interrupts, two timer interrupts, a serial port interrupt, and an analog comparator interrupt. These interrupts and the system reset each have a separate program vector at the start of the program memory space. Each interrupt source can be individually enabled or disabled by setting or clearing a bit in the interrupt enable register IE. The IE register also contains a global disable bit, EA, which disables all interrupts.

Each interrupt source can be individually programmed to one of four priority levels by setting or clearing bits in the interrupt priority registers IP and IPH. An interrupt service routine in progress can be interrupted by a higher priority interrupt, but not by another interrupt of the same or lower priority. The highest priority interrupt cannot be interrupted by any other interrupt source. If two requests of different priority levels are pending at the end of an instruction, the request of higher priority level is serviced. If requests of the same priority level are pending at the end of an instruction, an internal polling sequence determines which request is serviced. The polling sequence is based on the vector address; an interrupt with a lower vector address has higher priority than an interrupt with a higher vector address. Note that the polling sequence is only used to resolve pending requests of the same priority level.

The External Interrupts $\overline{\text{INT0}}$ and $\overline{\text{INT1}}$ can each be either level-activated or edge-activated, depending on bits IT0 and IT1 in Register TCON. The flags that actually generate these interrupts are the IE0 and IE1 bits in TCON. When the service routine is vectored to, hardware clears the flag that generated an external interrupt only if the interrupt was edge-activated. If the interrupt was level activated, then the external requesting source (rather than the on-chip hardware) controls the request flag.

The Timer 0 and Timer 1 Interrupts are generated by TF0 and TF1, which are set by a rollover in their respective Timer/Counter registers (except for Timer 0 in Mode 3). When a timer interrupt is generated, the on-chip hardware clears the flag that generated it when the service routine is vectored to.

The Serial Port Interrupt is generated by the logic OR of RI and TI in SCON plus SPIF in SPSR. None of these flags is cleared by hardware when the service routine is vectored to. In fact, the service routine normally must determine whether RI, TI, or SPIF generated the interrupt, and the bit must be cleared by software.

The CF bit in ACSR generates the Comparator Interrupt. The flag is not cleared by hardware when the service routine is vectored to and must be cleared by software.

Most of the bits that generate interrupts can be set or cleared by software, with the same result as though they had been set or cleared by hardware. That is, interrupts can be generated and pending interrupts can be canceled in software. The exception is the SPI interrupt flag SPIF. This flag is only set by hardware and may only be cleared by software.

Table 14-1. Interrupt Vector Addresses

Interrupt	Source	Vector Address
System Reset	RST or POR or BOD	0000H
External Interrupt 0	IE0	0003H
Timer 0 Overflow	TF0	000BH
External Interrupt 1	IE1	0013H
Timer 1 Overflow	TF1	001BH
Serial Port	RI or TI or SPIF	0023H
Reserved	–	002BH
Analog Comparator	CF	0033H

14.1 Interrupt Response Time

The interrupt flags may be set by their hardware in any clock cycle. The interrupt controller polls the flags in the last clock cycle of the instruction in progress. If one of the flags was set in the preceding cycle, the polling cycle will find it and the interrupt system will generate an LCALL to the appropriate service routine as the next instruction, provided that the interrupt is not blocked by any of the following conditions: an interrupt of equal or higher priority level is already in progress; the instruction in progress is RETI or any write to the IE, IP, or IPH registers. Either of these conditions will block the generation of the LCALL to the interrupt service routine. The second condition ensures that if the instruction in progress is RETI or any access to IE, IP or IPH, then at least one more instruction will be executed before any interrupt is vectored to. The polling cycle is repeated at the last cycle of each instruction, and the values polled are the values that were present at the previous clock cycle. If an active interrupt flag is not being serviced because of one of the above conditions and is no longer active when the blocking condition is removed, the denied interrupt will not be serviced. In other words, the fact that the interrupt flag was once active but not serviced is not remembered. Every polling cycle is new.

If a request is active and conditions are met for it to be acknowledged, a hardware subroutine call to the requested service routine will be the next instruction executed. The call itself takes four cycles. Thus, a minimum of five complete clock cycles elapsed between activation of an interrupt request and the beginning of execution of the first instruction of the service routine. A longer response time results if the request is blocked by one of the previously listed conditions. If an interrupt of equal or higher priority level is already in progress, the additional wait time depends on the nature of the other interrupt's service routine. If the instruction in progress is not in its final clock cycle, the additional wait time cannot be more than 3 cycles, since the longest are only 4 cycles long. If the instruction in progress is RETI or an access to IE or IP, the additional wait time cannot be more than 7 cycles (a maximum of three more cycles to complete the instruction in progress, plus a maximum of 4 cycles to complete the next instruction). Thus, in a single-interrupt system, the response time is always more than 5 clock cycles and less than 13 clock cycles. See Figures 14-1 and 14-2.

Figure 14-1. Minimum Interrupt Response Time

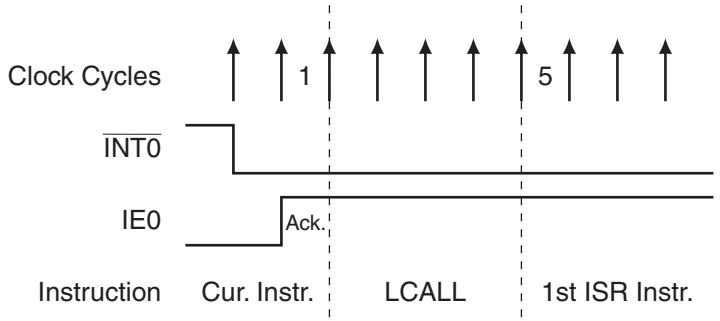

Figure 14-2. Maximum Interrupt Response Time

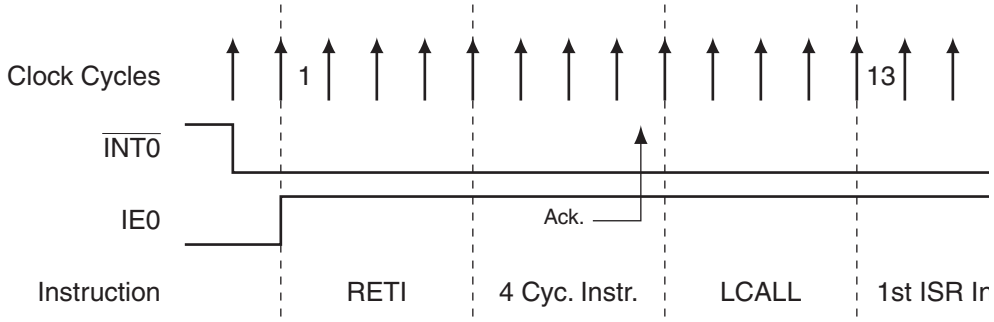

Table 14-2. IE – Interrupt Enable Register

IE = A8H Reset Value = 00X0 0000B

Bit Addressable

	EA	EC	–	ES	ET1	EX1	ET0	EX0
Bit	7	6	5	4	3	2	1	0

Symbol	Function
EA	Global enable/disable. All interrupts are disabled when EA = 0. When EA = 1, each interrupt source is enabled/disabled by setting /clearing its own enable bit.
EC	Comparator Interrupt Enable
ES	Serial Port Interrupt Enable
ET1	Timer 1 Interrupt Enable
EX1	External Interrupt 1 Enable
ET0	Timer 0 Interrupt Enable
EX0	External Interrupt 0 Enable

Table 14-3. IP – Interrupt Priority Register

IP = B8H Reset Value = X0X0 0000B

Bit Addressable

	–	PC	–	PS	PT1	PX1	PT0	PX0
Bit	7	6	5	4	3	2	1	0

Symbol	Function
PC	Comparator Interrupt Priority Low
PS	Serial Port Interrupt Priority Low
PT1	Timer 1 Interrupt Priority Low
PX1	External Interrupt 1 Priority Low
PT0	Timer 0 Interrupt Priority Low
PX0	External Interrupt 0 Priority Low

Table 14-4. IPH – Interrupt Priority High Register

IPH = B7H — Reset Value = X0X0 0000B

Not Bit Addressable

	–	PCH	–	PSH	PT1H	PX1H	PT0H	PX0H
Bit	7	6	5	4	3	2	1	0

Symbol	Function
PCH	Comparator Interrupt Priority High
PSH	Serial Port Interrupt Priority High
PT1H	Timer 1 Interrupt Priority High
PX1H	External Interrupt 1 Priority High
PT0H	Timer 0 Interrupt Priority High
PX0H	External Interrupt 0 Priority High

15. I/O Ports

All 15 port pins on the AT89LP2052/LP4052 may be configured to one of four modes: quasi-bidirectional (standard 8051 port outputs), push-pull output, open-drain output, or input-only. Port modes may be assigned in software on a pin-by-pin basis as shown in Table 15-1. All port pins default to input-only mode after reset. Each port pin also has a Schmitt-triggered input for improved input noise rejection. During Power-down all the Schmitt-triggered inputs are disabled with the exception of P3.2 and P3.3, which may be used to wake-up the device. Therefore P3.2 and P3.3 should not be left floating during Power-down.

Table 15-1. Configuration Modes for Port x, Bit y

PxM0.y	PxM1.y	Port Mode
0	0	Quasi-bidirectional
0	1	Push-pull Output
1	0	Input Only (High Impedance)
1	1	Open-Drain Output

15.1 Quasi-bidirectional Output

Port pins in quasi-bidirectional output mode function similar to standard 8051 port pins. A Quasi-bidirectional port can be used both as an input and output without the need to reconfigure the port. This is possible because when the port outputs a logic high, it is weakly driven, allowing an external device to pull the pin low. When the pin is driven low, it is driven strongly and able to sink a large current. There are three pull-up transistors in the quasi-bidirectional output that serve different purposes.

One of these pull-ups, called the “very weak” pull-up, is turned on whenever the port register for the pin contains a logic “1”. This very weak pull-up sources a very small current that will pull the pin high if it is left floating.

A second pull-up, called the “weak” pull-up, is turned on when the port register for the pin contains a logic “1” and the pin itself is also at a logic “1” level. This pull-up provides the primary source current for a quasi-bidirectional pin that is outputting a 1. If this pin is pulled low by an external device, this weak pull-up turns off, and only the very weak pull-up remains on. In order to pull the pin low under these conditions, the external device has to sink enough current to overpower the weak pull-up and pull the port pin below its input threshold voltage.

The third pull-up is referred to as the “strong” pull-up. This pull-up is used to speed up low-to-high transitions on a quasi-bidirectional port pin when the port register changes from a logic “0” to a logic “1”. When this occurs, the strong pull-up turns on for one CPU clock, quickly pulling the port pin high.

When in quasi-bidirectional mode the port pin will always output a “0” when corresponding bit in the port register is also “0”. When the port register is “1” the pin may be used either as an input or an output of “1”. The quasi-bidirectional port configuration is shown in Figure 15-1. The input circuitry of P3.2 and P3.3 is not disabled during Power-down (see Figure 15-3).

Figure 15-1. Quasi-bidirectional Output

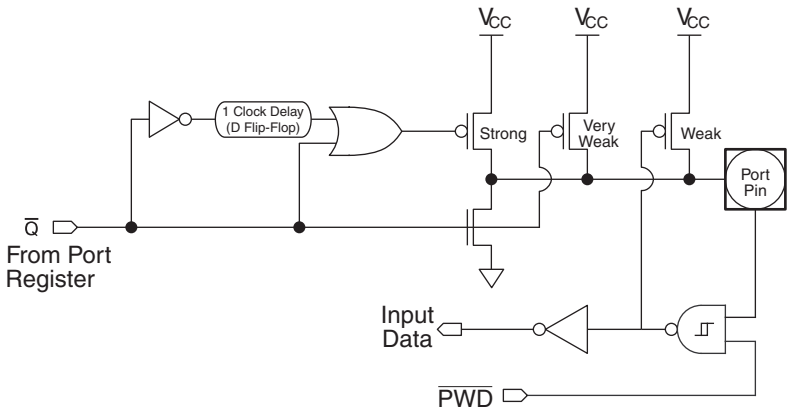

15.2 Input-only Mode

The input port configuration is shown in Figure 15-2. It is a Schmitt-triggered input for improved input noise rejection.

Figure 15-2. Input Only

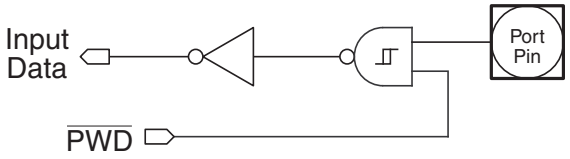

Figure 15-3. Input Only for P3.2 and P3.3

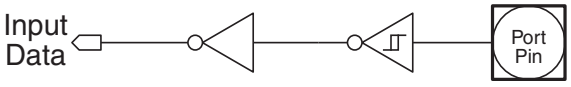

15.3 Open-drain Output

The open-drain output configuration turns off all pull-ups and only drives the pull-down transistor of the port pin when the port register contains a logic “0”. To be used as a logic output, a port configured in this manner must have an external pull-up, typically a resistor tied to V_{CC}. The pull-down for this mode is the same as for the quasi-bidirectional mode. The open-drain port configuration is shown in Figure 15-4. The input circuitry of P3.2 and P3.3 is not disabled during Power-down (see Figure 15-3).

Figure 15-4. Open-Drain Output

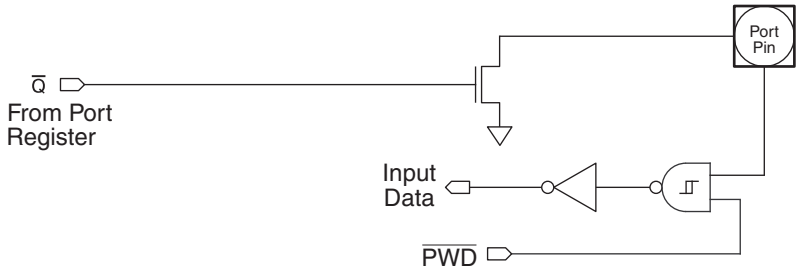

15.4 Push-pull Output

The push-pull output configuration has the same pull-down structure as both the open-drain and the quasi-bidirectional output modes, but provides a continuous strong pull-up when the port register contains a logic “1”. The push-pull mode may be used when more source current is needed from a port output. The push-pull port configuration is shown in Figure 15-5. The input circuitry of P3.2 and P3.3 is not disabled during Power-down (see Figure 15-3).

Figure 15-5. Push-pull Output

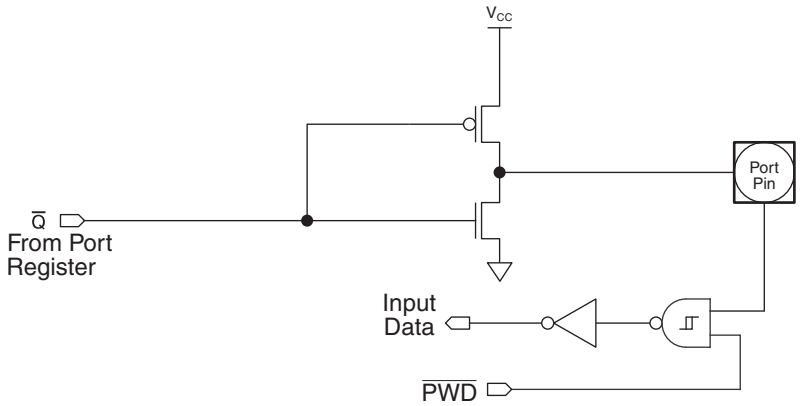

15.5 Port 1 Analog Functions

The AT89LP2052/LP4052 incorporates an analog comparator. In order to give the best analog performance and minimize power consumption, pins that are being used for analog functions must have both the digital outputs and digital inputs disabled. Digital outputs are disabled by putting the port pins into the input-only mode as described in Section 15. “I/O Ports” on page 20.

Digital inputs on P1.0 and P1.1 are disabled whenever the Analog Comparator is enabled by setting the CEN bit in ACSR. CEN forces the $\overline{PWD}$ input on P1.0 and P1.1 low, thereby disabling the Schmitt trigger circuitry.

15.6 Port Read-Modify-Write

A read from a port will read either the state of the pins or the state of the port register depending on which instruction is used. Simple read instructions will always access the port pins directly. Read-modify-write instructions, which read a value, possibly modify it, and then write it back, will always access the port register. This includes bit write instructions such as CLR or SETB as they actually read the entire port, modify a single bit, then write the data back to the entire port. See Table 15-2 for a complete list of Read-Modify-Write instruction which may access the ports.

Table 15-2. Port Read-Modify-Write Instructions

Mnemonic	Instruction	Example
ANL	Logical AND	ANL P1, A
ORL	Logical OR	ORL P1, A
XRL	Logical EX-OR	XRL P1, A
JBC	Jump if bit set and clear bit	JBC P3.0, LABEL
CPL	Complement bit	CPL P3.1
INC	Increment	INC P1
DEC	Decrement	DEC P3
DJNZ	Decrement and jump if not zero	DJNZ P3, LABEL
MOV PX.Y, C	Move carry to bit Y of Port X	MOV P1.0, C
CLR PX.Y	Clear bit Y of Port X	CLR P1.1
SETB PX.Y	Set bit Y of Port X	SETB P3.2

15.7 Port Alternate Functions

Most general-purpose digital I/O pins of the AT89LP2052/LP4052 share functionality with the various I/Os needed for the peripheral units. Table 15-4 lists the alternate functions of the port pins. Alternate functions are connected to the pins in a logic AND fashion. In order to enable the alternate function on a port pin, that pin must have a “1” in its corresponding port register bit, otherwise, the input/output will always be “0”. Furthermore, each pin must be configured for the correct input/output mode as required by its peripheral before it may be used as such. Table 15-3 shows how to configure a generic pin for use with an alternate function.

Table 15-3. Alternate Function Configurations for Pin y of Port x

PxM0.y	PxM1.y	Px.y	I/O Mode
0	0	1	Bidirectional (internal pull-up)
0	1	1	Output
1	0	X	Input
1	1	1	Bidirectional (external pull-up)

Table 15-4. Port Pin Alternate Functions

Port Pin	Configuration Bits		Alternate Function	Notes
	PxM0.y	PxM1.y		
P1.0	P1M0.0	P1M1.0	AIN0	Input-only
P1.1	P1M0.1	P1M1.1	AIN1	Input-only
P1.4	P1M0.4	P1M1.4	$\overline{SS}$	Refer to Section 19.4 “SPI Pin Configuration” on page 48
P1.5	P1M0.5	P1M1.5	MOSI	
P1.6	P1M0.6	P1M1.6	MISO	
P1.7	P1M0.7	P1M1.7	SCK	
P3.0	P3M0.0	P3M1.0	RXD	
P3.1	P3M0.1	P3M1.1	TXD	
P3.2	P3M0.2	P3M1.2	INT0	
P3.3	P3M0.3	P3M1.3	INT1	
P3.4	P3M0.4	P3M1.4	T0	Refer to Section 16.6 “Timer/Counter Pin Configuration” on page 30
P3.5	P3M0.5	P3M1.5	T1	
P3.6	Not configurable		CMPOUT	Pin is tied to comparator output

16. Enhanced Timer/Counters

The AT89LP2052/LP4052 has two 16-bit Timer/Counter registers: Timer 0 and Timer 1. As a Timer, the register is incremented every clock cycle. Thus, the register counts clock cycles. Since a clock cycle consists of one oscillator period, the count rate is equal to the oscillator frequency.

As a Counter, the register is incremented in response to a 1-to-0 transition at its corresponding input pin, T0 or T1. The external input is sampled every clock cycle. When the samples show a high in one cycle and a low in the next cycle, the count is incremented. The new count value appears in the register during the cycle following the one in which the transition was detected. Since 2 clock cycles are required to recognize a 1-to-0 transition, the maximum count rate is 1/2 of the oscillator frequency. There are no restrictions on the duty cycle of the input signal, but it should be held for at least one full clock cycle to ensure that a given level is sampled at least once before it changes.

Furthermore, the Timer or Counter functions for Timer 0 and Timer 1 have four operating modes: variable width timer/counter, 16 bit auto-reload timer/counter, 8 bit auto-reload timer/counter, and split timer/counter. The control bits C/$\overline{T}$ in the Special Function Register TMOD select the Timer or Counter function. The bit pairs (M1, M0) in TMOD select the operating modes.

16.1 Mode 0

Both Timers in Mode 0 are 8-bit Counters with a variable prescaler. The prescaler may vary from 1 to 8 bits depending on the PSC bits in TCONB, giving the timer a range of 9 to 16 bits. By default the timer is configured as a 13-bit timer compatible to Mode 0 in the standard 8051. Figure 16-1 shows the Mode 0 operation as it applies to Timer 1 in 13-bit mode. As the count rolls over from all “1”s to all “0”s, it sets the Timer interrupt flag TF1. The counted input is enabled to the Timer when TR1 = 1 and either GATE = 0 or $\overline{INT1}$ = 1. Setting GATE = 1 allows the Timer to be controlled by external input $\overline{INT1}$, to facilitate pulse width measurements. TR1 is

a control bit in the Special Function Register TCON. GATE is in TMOD. The 13-bit register consists of all 8 bits of TH1 and the lower 5 bits of TL1. The upper 3 bits of TL1 are indeterminate and should be ignored. Setting the run flag (TR1) does not clear the registers. See Figure 16-1.

Figure 16-1. Timer/Counter 1 Mode 0: Variable Width Counter

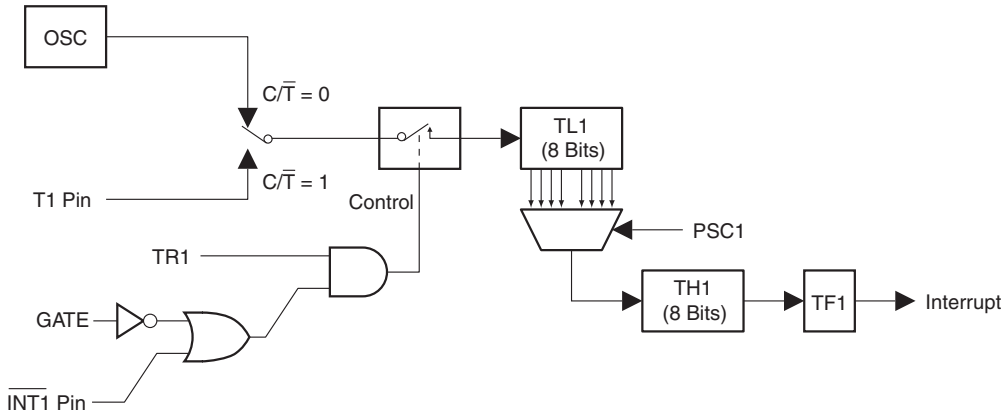

Mode 0 operation is the same for Timer 0 as for Timer 1, except that TR0, TF0 and $\overline{INT0}$ replace the corresponding Timer 1 signals in Figure 16-1. There are two different GATE bits, one for Timer 1 (TMOD.7) and one for Timer 0 (TMOD.3).

16.2 Mode 1

In Mode 1 the Timers are configured for 16-bit auto-reload. The Timer register is run with all 16 bits. The 16-bit reload value is stored in the high and low reload registers (RH1/RL1). The clock is applied to the combined high and low timer registers (TH1/TL1). As clock pulses are received, the timer counts up: 0000H, 0001H, 0002H, etc. An overflow occurs on the FFFFH-to-0000H transition, upon which the timer register is reloaded with the value from RH1/RL1 and the overflow flag bit in TCON is set. See Figure 16-2. The reload registers default to 0000H, which gives the full 16-bit timer period compatible with the standard 8051. Mode 1 operation is the same for Timer/Counter 0.

Figure 16-2. Timer/Counter 1 Mode 1: 16-bit Auto-Reload

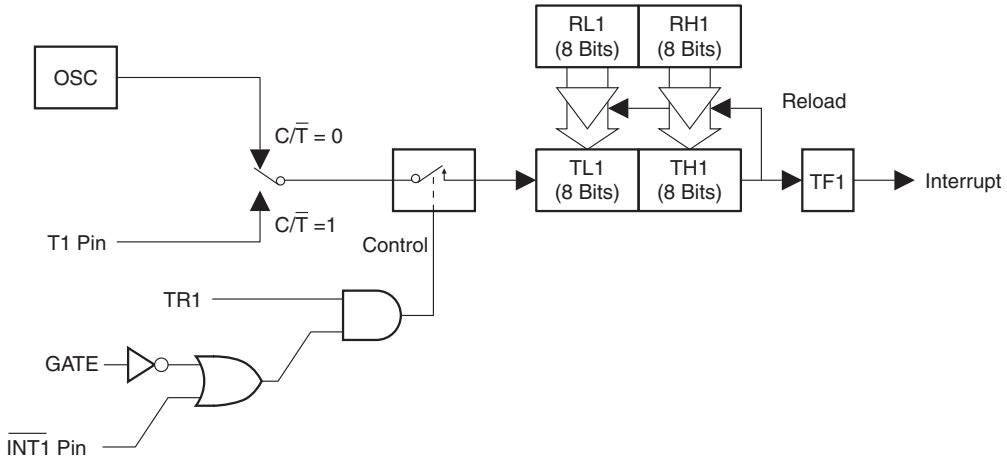

16.3 Mode 2

Mode 2 configures the Timer register as an 8-bit Counter (TL1) with automatic reload, as shown in Figure 16-3. Overflow from TL1 not only sets TF1, but also reloads TL1 with the contents of TH1, which is preset by software. The reload leaves TH1 unchanged. Mode 2 operation is the same for Timer/Counter 0.

Figure 16-3. Timer/Counter 1 Mode 2: 8-bit Auto-Reload

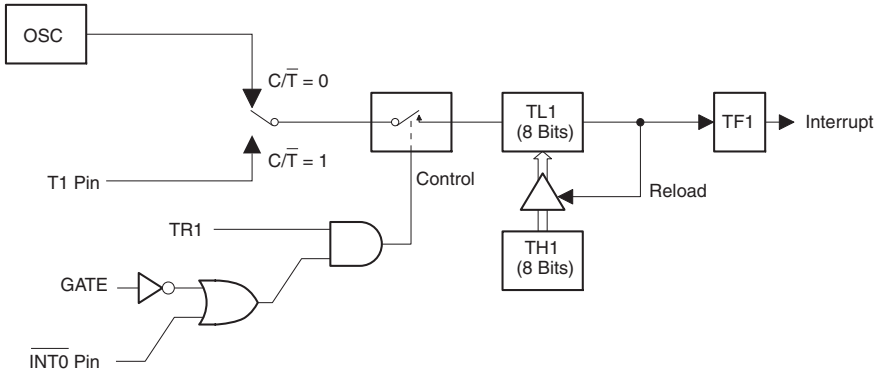

16.4 Mode 3

Timer 1 in Mode 3 simply holds its count. The effect is the same as setting TR1 = 0. Timer 0 in Mode 3 establishes TL0 and TH0 as two separate counters. The logic for Mode 3 on Timer 0 is shown in Figure 16-4. TL0 uses the Timer 0 control bits: C/T, GATE, TR0, INT0, and TF0. TH0 is locked into a timer function (counting machine cycles) and takes over the use of TR1 and TF1 from Timer 1. Thus, TH0 now controls the Timer 1 interrupt.

Mode 3 is for applications requiring an extra 8-bit timer or counter. With Timer 0 in Mode 3, the AT89LP2052/LP4052 can appear to have three Timer/Counters. When Timer 0 is in Mode 3, Timer 1 can be turned on and off by switching it out of and into its own Mode 3. In this case, Timer 1 can still be used by the serial port as a baud rate generator or in any application not requiring an interrupt.

Figure 16-4. Timer/Counter 0 Mode 3: Two 8-bit Counters

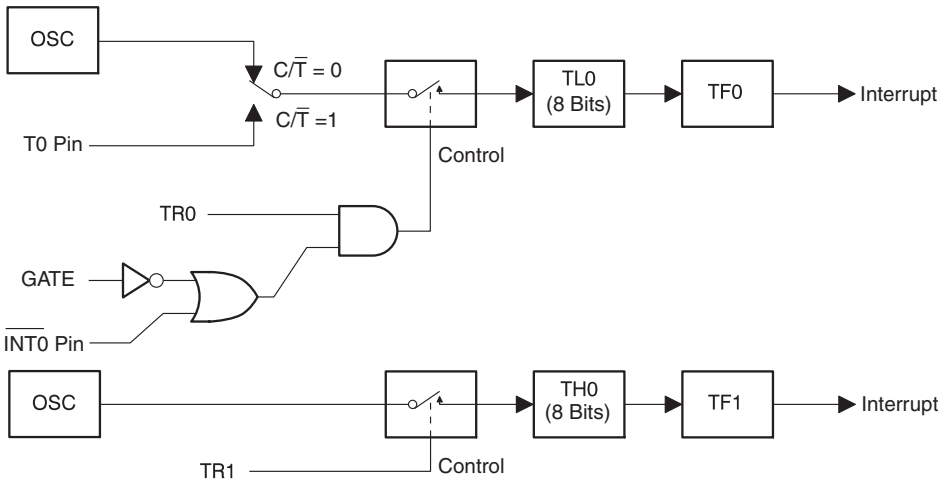

Table 16-1. TCON – Timer/Counter Control Register

TCON = 88H Reset Value = 0000 0000B

Bit Addressable

	TF1	TR1	TF0	TR0	IE1	IT1	IE0	IT0
Bit	7	6	5	4	3	2	1	0

Symbol	Function
TF1	Timer 1 overflow flag. Set by hardware on Timer/Counter overflow. Cleared by hardware when the processor vectors to interrupt routine.
TR1	Timer 1 run control bit. Set/cleared by software to turn Timer/Counter on/off.
TF0	Timer 0 overflow flag. Set by hardware on Timer/Counter overflow. Cleared by hardware when the processor vectors to interrupt routine.
TR0	Timer 0 run control bit. Set/cleared by software to turn Timer/Counter on/off.
IE1	Interrupt 1 flag. When IT1 is set, IE1 is set by hardware when the external interrupt falling edge is detected, and is cleared by hardware when the CPU vectors to the interrupt routine. When IT1 is cleared, IE1 is sampled and inverted from the external interrupt pin. The flag will be set or cleared by hardware depending on the state of P3.3.
IT1	Interrupt 1 type control bit. Set/cleared by software to specify falling edge/low level triggered external interrupts.
IE0	Interrupt 0 flag. When IT0 is set, IE0 is set by hardware when the external interrupt falling edge is detected, and is cleared by hardware when the CPU vectors to the interrupt routine. When IT0 is cleared, IE0 is sampled and inverted from the external interrupt pin. The flag will be set or cleared by hardware depending on the state of P3.2.
IT0	Interrupt 0 type control bit. Set/cleared by software to specify falling edge/low level triggered external interrupts.

Table 16-2. TMOD: Timer/Counter Mode Control Register

TMOD = 89H — Reset Value = 0000 0000B

Not Bit Addressable

GATE	C/$\overline{T}$	M1	M0	GATE	C/$\overline{T}$	M1	M0
7	$\overline{6}$	5	4	3	$\overline{2}$	1	0
Timer1				**Timer0**			

Gate	Gating control: when set Timer/Counter x is enabled only while $\overline{INTx}$ pin is high and TRx control pin is set. When cleared, Timer x is enabled whenever TRx control bit is set.	Timer 0 gate bit
C/$\overline{T}$	Timer or Counter Selector: cleared for Timer operation (input from internal system clock). Set for Counter operation (input from Tx input pin).	Timer 0 counter/timer select bit
M1	Mode bit 1	Timer 0 M1 bit
M0	Mode bit 0	Timer 0 M0 bit

M1	M0	Mode	Operating Mode
0	0	0	Variable 9 - 16-bit Timer/Counter. 8-bit Timer/Counter THz with TLx as 1 - 8-bit prescaler.
0	1	1	16-bit Auto Reload Timer/Counter. 8-bit Timer/Counters THx and TLx are cascaded; there is no prescaler.
1	0	2	8-bit Auto Reload Timer/Counter. 8-bit auto-reload Timer/Counter THx holds a value which is to be reloaded into TLx each time it overflows.
1	1	3	Split Timer/Counter. (Timer 0) TL0 is an 8-bit Timer/Counter controlled by the standard Timer 0 control bits. TH0 is an 8-bit timer only controlled by Timer 1 control bits.
1	1	3	(Timer 1) Timer/Counter 1 stopped.

Timer SFR	Purpose	Address	Bit-Addressable
TCON	Control	88H	Yes
TMOD	Mode	89H	No
TL0	Timer 0 low-byte	8AH	No
TL1	Timer 1 low-byte	8BH	No
TH0	Timer 0 high-byte	8CH	No
TH1	Timer 1 high-byte	8DH	No
TCONB	Mode	91H	No
RL0	Timer 0 reload low-byte	92H	No
RL1	Timer 1 reload low-byte	93H	No
RH0	Timer 0 reload high-byte	94H	No
RH1	Timer 1 reload high-byte	95H	No

Table 16-3. TCONB – Timer/Counter Control Register B

TCONB = 91H — Reset Value = 0010 0100B

Not Bit Addressable

	PWM1EN	PWM0EN	PSC12	PSC11	PSC10	PSC02	PSC01	PSC00
Bit	7	6	5	4	3	2	1	0

Symbol	Function
PWM1EN	Configures Timer 1 for Pulse Width Modulation output on T1 (P3.5).
PWM0EN	Configures Timer 0 for Pulse Width Modulation output on T0 (P3.4).
PSC12 PSC11 PSC10	Prescaler for Timer 1 Mode 0. The number of active bits in TL1 equals PSC1 + 1. After reset PSC1 = 100B which enables 5 bits of TL1 for compatibility with the 13-bit Mode 0 in AT89S2051.
PSC02 PSC01 PSC00	Prescaler for Timer 0 Mode 0. The number of active bits in TL0 equals PSC0 + 1. After reset PSC0 = 100B which enables 5 bits of TL0 for compatibility with the 13-bit Mode 0 in AT89C52.

16.5 Pulse Width Modulation

Timer 0 and Timer 1 may be independently configured as 8-bit asymmetrical pulse width modulators (PWM) by setting the PWM0EN or PWM1EN bits in TCONB, respectively. In PWM Mode the generated waveform is output on the timer's pin, T0 or T1. C/$\overline{T}$ must be set to “0” when in PWM mode. In Timer 0's PWM mode, TH0 acts as an 8-bit counter while RH0 stores the 8-bit compare value. When TH0 is 00H the PWM output is set high. When the TH0 count reaches the value stored in RH0 the PWM output is set low. Therefore, the pulse width is proportional to the value in RH0. To prevent glitches writes to RH0 only take effect on the FFH to 00H overflow of TH0. Timer 1 has the same behavior using TH1 and RH1. See Figure 16-5 for PWM waveform example. Setting RH0 to 00H will keep the PWM output low.

The PWM will only function if the timer is in Mode 0 or Mode 1. In Mode 0, TL0 acts as a logarithmic prescaler driving TH0 (see Figure 16-6). The PSC0 bits in TCONB control the prescaler value. In Mode 1, TL0 provides linear prescaling with an 8-bit auto-reload from RL0 (see Figure 16-7).

Figure 16-5. Asymmetrical Pulse Width Modulation

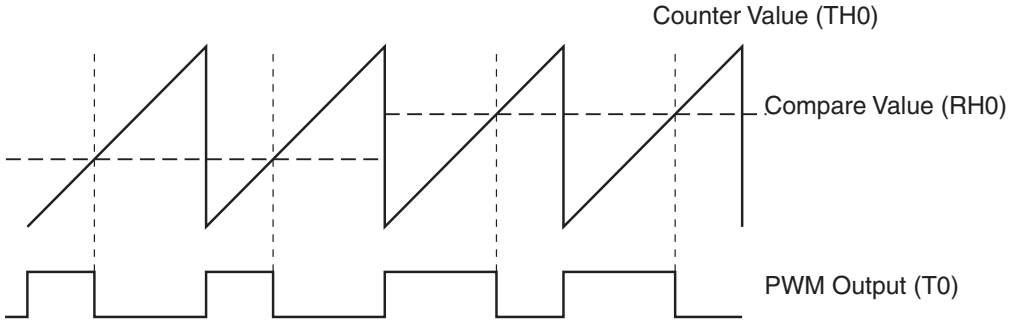

Figure 16-6. Timer/Counter 1 PWM Mode 0

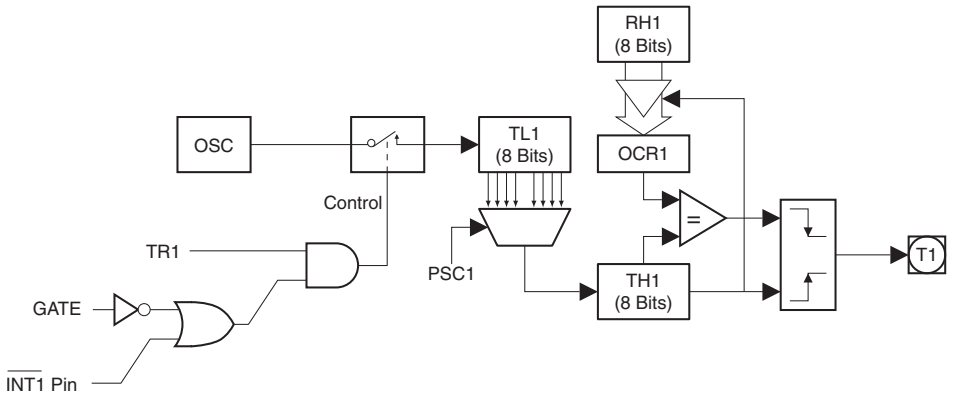

Figure 16-7. Timer/Counter 1 PWM Mode 1

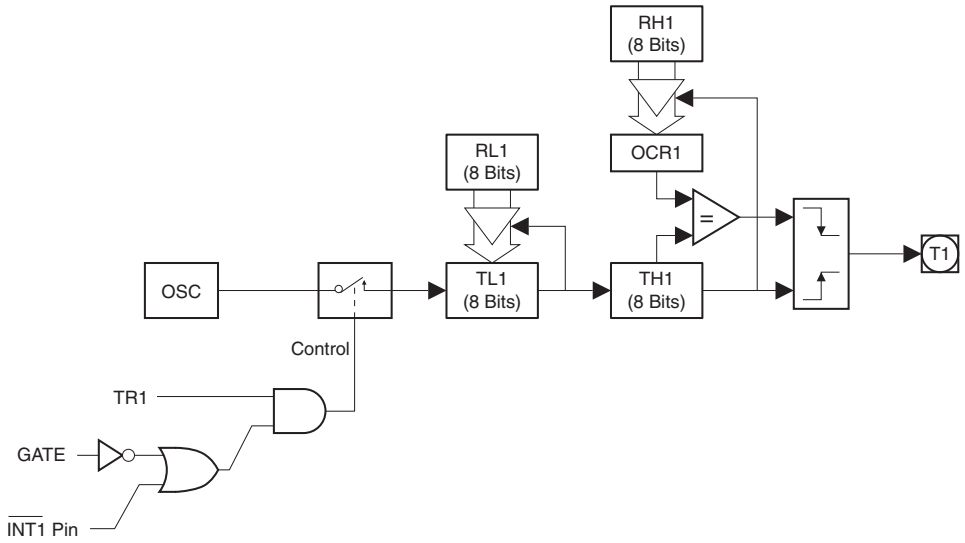

16.6 Timer/Counter Pin Configuration

In order to use the counter input function or pulse width modulation output feature of Timer 0 or Timer 1, the Timer pins T0 (P3.4) and T1 (P3.5) must be configured appropriately. See Section 15.7 “Port Alternate Functions” on page 23. For the external counter input function, T0 or T1 should be configured as input-only, or as bidirectional with P3.4 or P3.5 set to “1”. The counter function may also be triggered by an internal event if T0 or T1 is configured in a bidirectional or output mode and the port bit is toggled accordingly. To enable a PWM output on T0 or T1, the pin must be configured in a bidirectional or output mode with P3.4 or P3.5 set to “1”. Setting the PWM0EN or PWM1En bits in TCONB will **not** automatically configure the pins as outputs. The PWM outputs will use a full CMOS push-pull driver if they are in the quasi-bidirectional or output configurations.

17. External Interrupts

The $\overline{\text{INT0}}$ and $\overline{\text{INT1}}$ external interrupt sources can be programmed to be level-activated or transition-activated by setting or clearing bit IT1 or IT0 in Register TCON. If ITx = 0, external interrupt x is triggered by a detected low at the $\overline{\text{INTx}}$ pin. If ITx = 1, external interrupt x is negative edge-triggered. In this mode if successive samples of the $\overline{\text{INTx}}$ pin show a high in one cycle

and a low in the next cycle, interrupt request flag IEx in TCON is set. Flag bit IEx then requests the interrupt. Since the external interrupt pins are sampled once each clock cycle, an input high or low should hold for at least 2 oscillator periods to ensure sampling. If the external interrupt is transition-activated, the external source has to hold the request pin high for at least two clock cycles, and then hold it low for at least two clock cycles to ensure that the transition is seen so that interrupt request flag IEx will be set. IEx will be automatically cleared by the CPU when the service routine is called if generated in edge-triggered mode. If the external interrupt is level-activated, the external source has to hold the request active until the requested interrupt is actually generated. Then the external source must deactivate the request before the interrupt service routine is completed, or else another interrupt will be generated.

18. Serial Interface

The serial port is full-duplex, which means it can transmit and receive simultaneously. It is also receive-buffered, which means it can begin receiving a second byte before a previously received byte has been read from the receive register. (However, if the first byte still has not been read when reception of the second byte is complete, the first byte will be lost.) The serial port receive and transmit registers are both accessed at Special Function Register SBUF. Writing to SBUF loads the transmit register, and reading SBUF accesses a physically separate receive register. The serial port can operate in the following four modes.

Mode 0: Half-Duplex serial data enters or exits through RXD. TXD outputs the shift clock. Eight data bits are transmitted/received, with the LSB first. The baud rate is fixed at 1/2 the oscillator frequency.

Mode 1: 10 bits are transmitted (through TXD) or received (through RXD): a start bit (0), 8 data bits (LSB first), and a stop bit (1). On receive, the stop bit goes into RB8 in Special Function Register SCON. The baud rate is variable based on Timer 1 overflow.

Mode 2: 11 bits are transmitted (through TXD) or received (through RXD): a start bit (0), 8 data bits (LSB first), a programmable ninth data bit, and a stop bit (1). On transmit, the 9th data bit (TB8 in SCON) can be assigned the value of “0” or “1”. For example, the parity bit (P, in the PSW) can be moved into TB8. On receive, the 9th data bit goes into RB8 in Special Function Register SCON, while the stop bit is ignored. The baud rate is programmable to either 1/16 or 1/32 the oscillator frequency.

Mode 3: 11 bits are transmitted (through TXD) or received (through RXD): a start bit (0), 8 data bits (LSB first), a programmable ninth data bit, and a stop bit (1). In fact, Mode 3 is the same as Mode 2 in all respects except the baud rate, which in Mode 3 is variable based on Timer 1 overflow.

In all four modes, transmission is initiated by any instruction that uses SBUF as a destination register. Reception is initiated in Mode 0 by the condition RI = 0 and REN = 1. Reception is initiated in the other modes by the incoming start bit if REN = 1.

18.1 Multiprocessor Communications

Modes 2 and 3 have a special provision for multiprocessor communications. In these modes, 9 data bits are received, followed by a stop bit. The ninth bit goes into RB8. Then comes a stop bit. The port can be programmed such that when the stop bit is received, the serial port interrupt is activated only if RB8 = 1. This feature is enabled by setting bit SM2 in SCON.

The following example shows how to use the serial interrupt for multiprocessor communications. When the master processor must transmit a block of data to one of several slaves, it first sends

out an address byte that identifies the target slave. An address byte differs from a data byte in that the 9th bit is “1” in an address byte and “0” in a data byte. With SM2 = 1, no slave is interrupted by a data byte. An address byte, however, interrupts all slaves, so that each slave can examine the received byte and see if it is being addressed. The addressed slave clears its SM2 bit and prepares to receive the data bytes that follows. The slaves that are not addressed set their SM2 bits and ignore the data bytes.

The SM2 bit has no effect in Mode 0 but can be used to check the validity of the stop bit in Mode 1. In a Mode 1 reception, if SM2 = 1, the receive interrupt is not activated unless a valid stop bit is received.

Table 18-1. SCON – Serial Port Control Register

SCON Address = 98H — Reset Value = 0000 0000B

Bit Addressable

	SM0/FE	SM1	SM2	REN	TB8	RB8	T1	RI
Bit	7	6	5	4	3	2	1	0

(SMOD0 = 0/1)[1]

Symbol	Function
FE	Framing error bit. This bit is set by the receiver when an invalid stop bit is detected. The FE bit is not cleared by valid frames but should be cleared by software. The SMOD0 bit must be set to enable access to the FE bit. FE will be set regardless of the state of SMOD0.
SM0	Serial Port Mode Bit 0, (SMOD0 must = 0 to access bit SM0)
SM1	Serial Port Mode Bit 1 **SM0** / **SM1** / **Mode** / **Description** / **Baud Rate**[2] 0 / 0 / 0 / shift register / $f_{osc}/2$ 0 / 1 / 1 / 8-bit UART / variable 1 / 0 / 2 / 9-bit UART / $f_{osc}/32$ or $f_{osc}/16$ 1 / 1 / 3 / 9-bit UART / variable
SM2	Enables the Automatic Address Recognition feature in Modes 2 or 3. If SM2 = 1 then RI will not be set unless the received 9th data bit (RB8) is 1, indicating an address, and the received byte is a Given or Broadcast Address. In Mode 1, if SM2 = 1 then RI will not be activated unless a valid stop bit was received, and the received byte is a Given or Broadcast Address. In Mode 0, SM2 should be 0.
REN	Enables serial reception. Set by software to enable reception. Clear by software to disable reception.
TB8	The 9th data bit that will be transmitted in Modes 2 and 3. Set or clear by software as desired.
RB8	In Modes 2 and 3, the 9th data bit that was received. In Mode 1, if SM2 = 0, RB8 is the stop bit that was received. In Mode 0, RB8 is not used.
TI	Transmit interrupt flag. Set by hardware at the end of the 8th bit time in Mode 0, or at the beginning of the stop bit in the other modes, in any serial transmission. Must be cleared by software.
RI	Receive interrupt flag. Set by hardware at the end of the 8th bit time in Mode 0, or halfway through the stop bit time in the other modes, in any serial reception (except see SM2). Must be cleared by software.

Notes: 1. SMOD0 is located at PCON.6.
2. f_{osc} = oscillator frequency.

18.2 Baud Rates

The baud rate in Mode 0 is fixed as shown in the following equation.

$$\text{Mode 0 Baud Rate} = \frac{\text{Oscillator Frequency}}{2}$$

The baud rate in Mode 2 depends on the value of the SMOD1 bit in Special Function Register PCON.7. If SMOD1 = 0 (the value on reset), the baud rate is 1/32 of the oscillator frequency. If SMOD1 = 1, the baud rate is 1/16 of the oscillator frequency, as shown in the following equation.

$$\text{Mode 2 Baud Rate} = \frac{2^{\text{SMOD1}}}{32} \times (\text{Oscillator Frequency})$$

18.2.1 Using Timer 1 to Generate Baud Rates

The Timer 1 overflow rate determines the baud rates in Modes 1 and 3. When Timer 1 is the baud rate generator, the baud rates are determined by the Timer 1 overflow rate and the value of SMOD1 according to the following equation.

$$\text{Modes 1, 3 Baud Rate} = \frac{2^{\text{SMOD1}}}{32} \times (\text{Timer 1 Overflow Rate})$$

The Timer 1 interrupt should be disabled in this application. The Timer itself can be configured for either timer or counter operation in any of its 3 running modes. In the most typical applications, it is configured for timer operation in auto-reload mode (high nibble of TMOD = 0010B). In this case, the baud rate is given by the following formula.

$$\text{Modes 1, 3 Baud Rate} = \frac{2^{\text{SMOD1}}}{32} \times \frac{\text{Oscillator Frequency}}{[256 - (\text{TH1})]}$$

Programmers can achieve very low baud rates with Timer 1 by configuring the Timer to run as a 16-bit auto-reload timer (high nibble of TMOD = 0001B). In this case, the baud rate is given by the following formula.

$$\text{Modes 1, 3 Baud Rate} = \frac{2^{\text{SMOD1}}}{32} \times \frac{\text{Oscillator Frequency}}{[65536 - (\text{RH1,RL1})]}$$

Table 18-2 lists commonly used baud rates and how they can be obtained from Timer 1.

Table 18-2. Commonly Used Baud Rates Generated by Timer 1

Baud Rate	f_{osc} (MHz)	SMOD1	Timer 1		
			C/$\overline{T}$	Mode	Reload Value
Mode 0: 1 MHz	2	X	X	X	X
Mode 2: 375K	12	0	X	X	X
62.5K	12	1	0	2	F4H
19.2K	11.059	1	0	2	DCH
9.6K	11.059	0	0	2	DCH
4.8K	11.059	0	0	2	B8H
2.4K	11.059	0	0	2	70H
1.2K	11.059	0	0	1	FEE0H
137.5	11.986	0	0	1	F55CH
110	6	0	0	1	F958H
110	12	0	0	1	F304H

18.3 More About Mode 0

Serial data enters and exits through RXD. TXD outputs the shift clock. Eight data bits are transmitted/received, with the LSB first. The baud rate is fixed at 1/2 the oscillator frequency. Figure 18-1 shows a simplified functional diagram of the serial port in Mode 0 and associated timing.

Transmission is initiated by any instruction that uses SBUF as a destination register. The “write to SBUF” signal also loads a “1” into the ninth position of the transmit shift register and tells the TX Control block to begin a transmission. The internal timing is such that one full machine cycle will elapse between “write to SBUF” and activation of SEND.

SEND transfers the output of the shift register to the alternate output function line of P3.0, and also transfers Shift Clock to the alternate output function line of P3.1. At the falling edge of Shift Clock the contents of the transmit shift register are shifted one position to the right.

As data bits shift out to the right, “0”s come in from the left. When the MSB of the data byte is at the output position of the shift register, the “1” that was initially loaded into the ninth position is just to the left of the MSB, and all positions to the left of that contain “0”s. This condition flags the TX Control block to do one last shift, then deactivate SEND and set TI.

Reception is initiated by the condition REN = 1 and R1 = 0. At the next clock cycle, the RX Control unit writes the bits 11111110 to the receive shift register and activates RECEIVE in the next clock phase.

RECEIVE enables Shift Clock to the alternate output function line of P3.1. At the falling edge of Shift Clock the contents of the receive shift register are shifted one position to the left. The value that comes in from the right is the value that was sampled at the P3.0 pin at rising edge of Shift Clock.

As data bits come in from the right, “1”s shift out to the left. When the “0” that was initially loaded into the right-most position arrives at the left-most position in the shift register, it flags the RX Control block to do one last shift and load SBUF. Then RECEIVE is cleared and RI is set.

Figure 18-1. Serial Port Mode 0

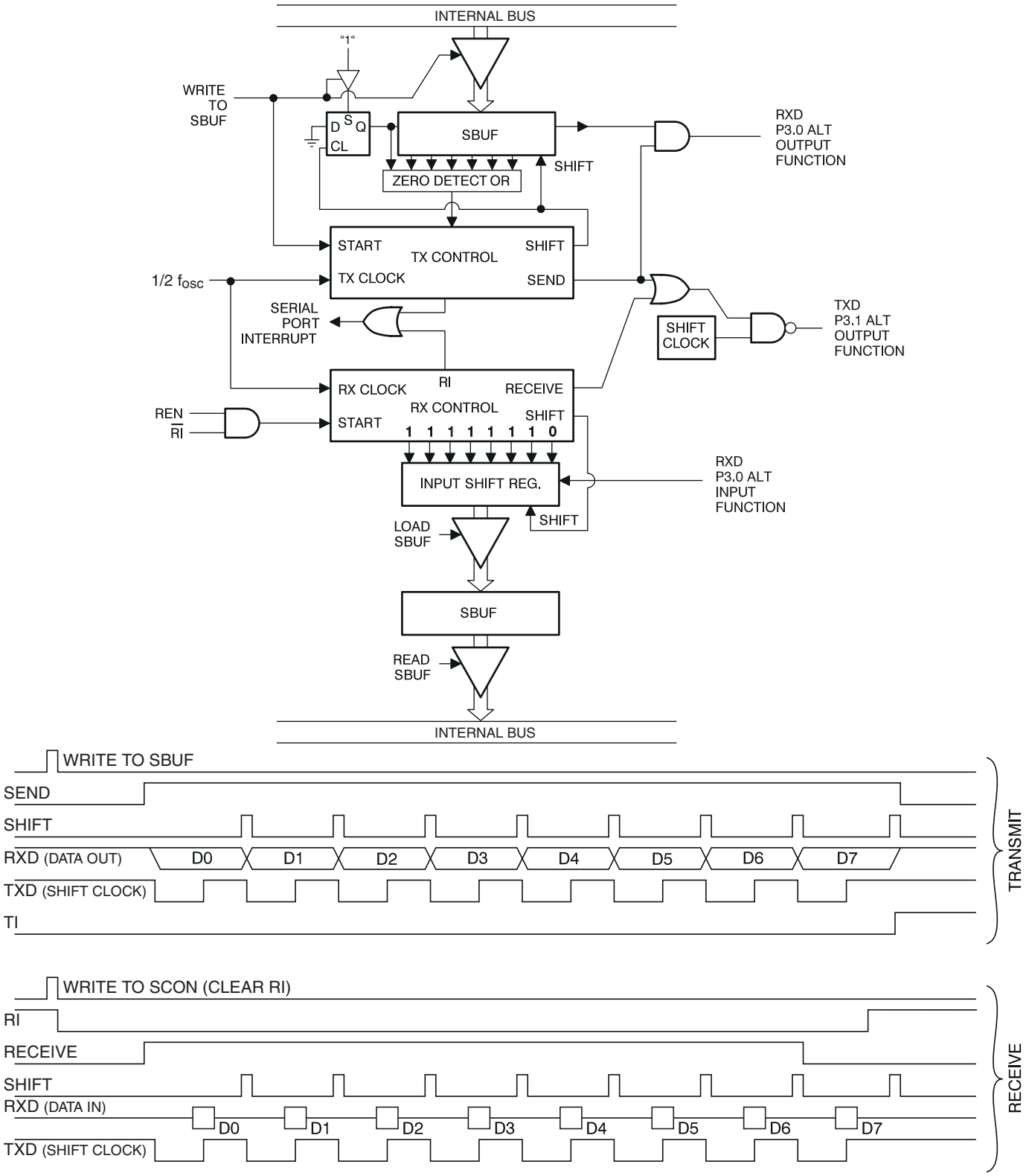

18.4 More About Mode 1

Ten bits are transmitted (through TXD), or received (through RXD): a start bit (0), 8 data bits (LSB first), and a stop bit (1). On receive, the stop bit goes into RB8 in SCON. In the AT89LP2052/LP4052, the baud rate is determined by the Timer 1 overflow rate. The baud rate is determined by the Timer 1 overflow rate. Figure 18-2 shows a simplified functional diagram of the serial port in Mode 1 and associated timings for transmit and receive.

Transmission is initiated by any instruction that uses SBUF as a destination register. The “write to SBUF” signal also loads a “1” into the ninth bit position of the transmit shift register and flags the TX Control unit that a transmission is requested. Transmission actually commences at S1P1 of the machine cycle following the next rollover in the divide-by-16 counter. Thus, the bit times are synchronized to the divide-by-16 counter, not to the “write to SBUF” signal.

The transmission begins when $\overline{\text{SEND}}$ is activated, which puts the start bit at TXD. One bit time later, DATA is activated, which enables the output bit of the transmit shift register to TXD. The first shift pulse occurs one bit time after that.

As data bits shift out to the right, “0”s are clocked in from the left. When the MSB of the data byte is at the output position of the shift register, the “1” that was initially loaded into the ninth position is just to the left of the MSB, and all positions to the left of that contain “0”s. This condition flags the TX Control unit to do one last shift, then deactivate $\overline{\text{SEND}}$ and set TI. This occurs at the tenth divide-by-16 rollover after “write to SBUF.”

Reception is initiated by a 1-to-0 transition detected at RXD. For this purpose, RXD is sampled at a rate of 16 times the established baud rate. When a transition is detected, the divide-by-16 counter is immediately reset, and 1FFH is written into the input shift register. Resetting the divide-by-16 counter aligns its roll-overs with the boundaries of the incoming bit times.

The 16 states of the counter divide each bit time into 16ths. At the seventh, eighth, and ninth counter states of each bit time, the bit detector samples the value of RXD. The value accepted is the value that was seen in at least 2 of the 3 samples. This is done to reject noise. In order to reject false bits, if the value accepted during the first bit time is not 0, the receive circuits are reset and the unit continues looking for another 1-to-0 transition. If the start bit is valid, it is shifted into the input shift register, and reception of the rest of the frame proceeds.

As data bits come in from the right, “1”s shift out to the left. When the start bit arrives at the left most position in the shift register, (which is a 9-bit register in Mode 1), it flags the RX Control block to do one last shift, load SBUF and RB8, and set RI. The signal to load SBUF and RB8 and to set RI is generated if, and only if, the following conditions are met at the time the final shift pulse is generated.

RI = 0 and

Either SM2 = 0, or the received stop bit = 1

If either of these two conditions is not met, the received frame is irretrievably lost. If both conditions are met, the stop bit goes into RB8, the 8 data bits go into SBUF, and RI is activated. At this time, whether or not the above conditions are met, the unit continues looking for a 1-to-0 transition in RXD.

Figure 18-2. Serial Port Mode 1

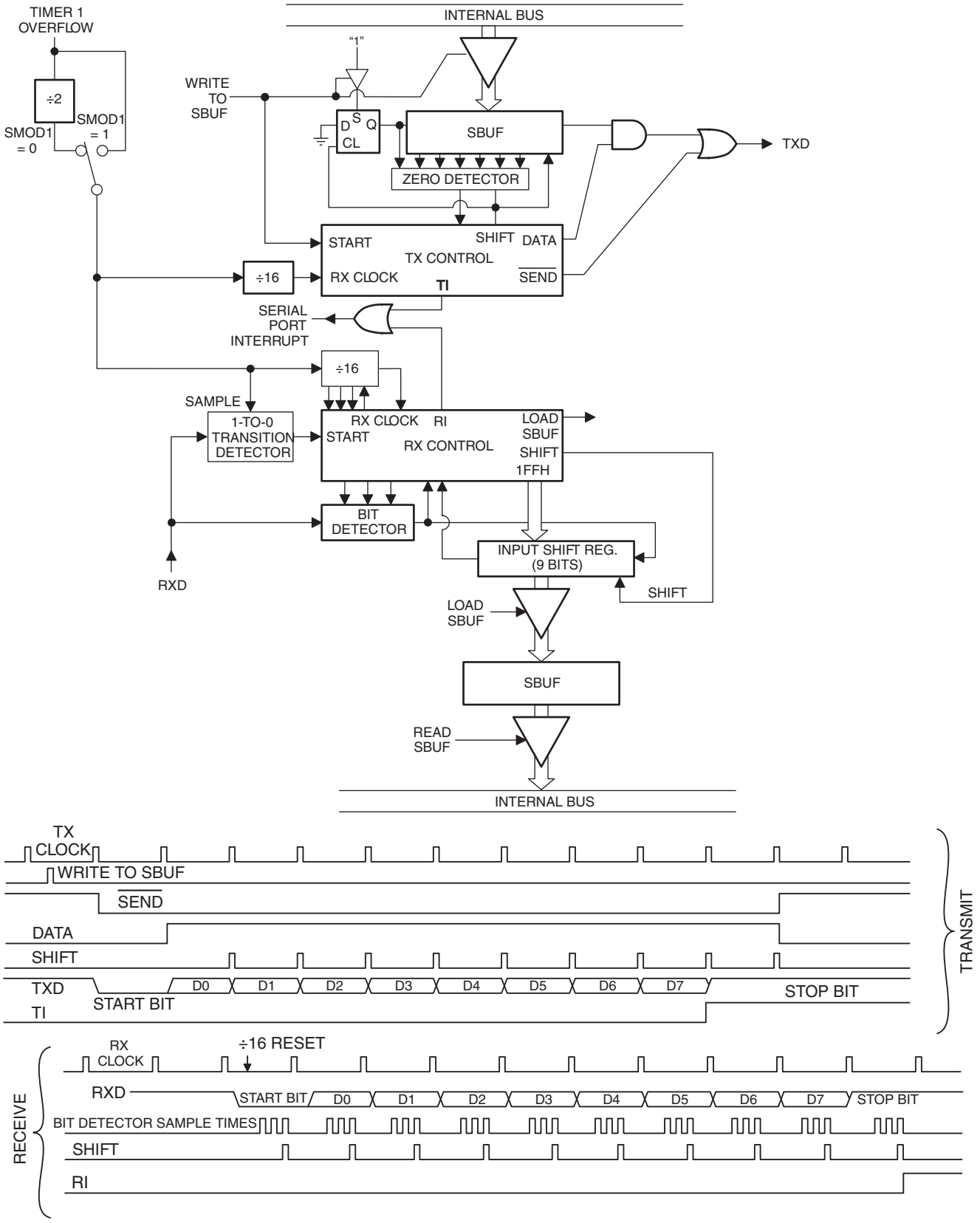

18.5 More About Modes 2 and 3

Eleven bits are transmitted (through TXD), or received (through RXD): a start bit (0), 8 data bits (LSB first), a programmable ninth data bit, and a stop bit (1). On transmit, the ninth data bit (TB8) can be assigned the value of “0” or “1”. On receive, the ninth data bit goes into RB8 in SCON. The baud rate is programmable to either 1/16 or 1/32 of the oscillator frequency in Mode 2. Mode 3 may have a variable baud rate generated from Timer 1.

Figures 18-3 and 18-4 show a functional diagram of the serial port in Modes 2 and 3. The receive portion is exactly the same as in Mode 1. The transmit portion differs from Mode 1 only in the ninth bit of the transmit shift register.

Transmission is initiated by any instruction that uses SBUF as a destination register. The “write to SBUF” signal also loads TB8 into the ninth bit position of the transmit shift register and flags the TX Control unit that a transmission is requested. Transmission commences at S1P1 of the machine cycle following the next rollover in the divide-by-16 counter. Thus, the bit times are synchronized to the divide-by-16 counter, not to the “write to SBUF” signal.

The transmission begins when $\overline{\text{SEND}}$ is activated, which puts the start bit at TXD. One bit time later, DATA is activated, which enables the output bit of the transmit shift register to TXD. The first shift pulse occurs one bit time after that. The first shift clocks a “1” (the stop bit) into the ninth bit position of the shift register. Thereafter, only “0”s are clocked in. Thus, as data bits shift out to the right, “0”s are clocked in from the left. When TB8 is at the output position of the shift register, then the stop bit is just to the left of TB8, and all positions to the left of that contain “0”s. This condition flags the TX Control unit to do one last shift, then deactivate SEND and set TI. This occurs at the 11th divide-by-16 rollover after “write to SBUF.”

Reception is initiated by a 1-to-0 transition detected at RXD. For this purpose, RXD is sampled at a rate of 16 times the established baud rate. When a transition is detected, the divide-by-16 counter is immediately reset, and 1FFH is written to the input shift register.

At the seventh, eighth and ninth counter states of each bit time, the bit detector samples the value of RXD. The value accepted is the value that was seen in at least 2 of the 3 samples. If the value accepted during the first bit time is not 0, the receive circuits are reset and the unit continues looking for another 1-to-0 transition. If the start bit proves valid, it is shifted into the input shift register, and reception of the rest of the frame proceeds.

As data bits come in from the right, “1”s shift out to the left. When the start bit arrives at the left most position in the shift register (which in Modes 2 and 3 is a 9-bit register), it flags the RX Control block to do one last shift, load SBUF and RB8, and set RI. The signal to load SBUF and RB8 and to set RI is generated if, and only if, the following conditions are met at the time the final shift pulse is generated:

RI = 0, and

Either SM2 = 0 or the received 9th data bit = 1

If either of these conditions is not met, the received frame is irretrievably lost, and RI is not set. If both conditions are met, the received ninth data bit goes into RB8, and the first 8 data bits go into SBUF. One bit time later, whether the above conditions were met or not, the unit continues looking for a 1-to-0 transition at the RXD input.

Note that the value of the received stop bit is irrelevant to SBUF, RB8, or RI.

Figure 18-3. Serial Port Mode 2

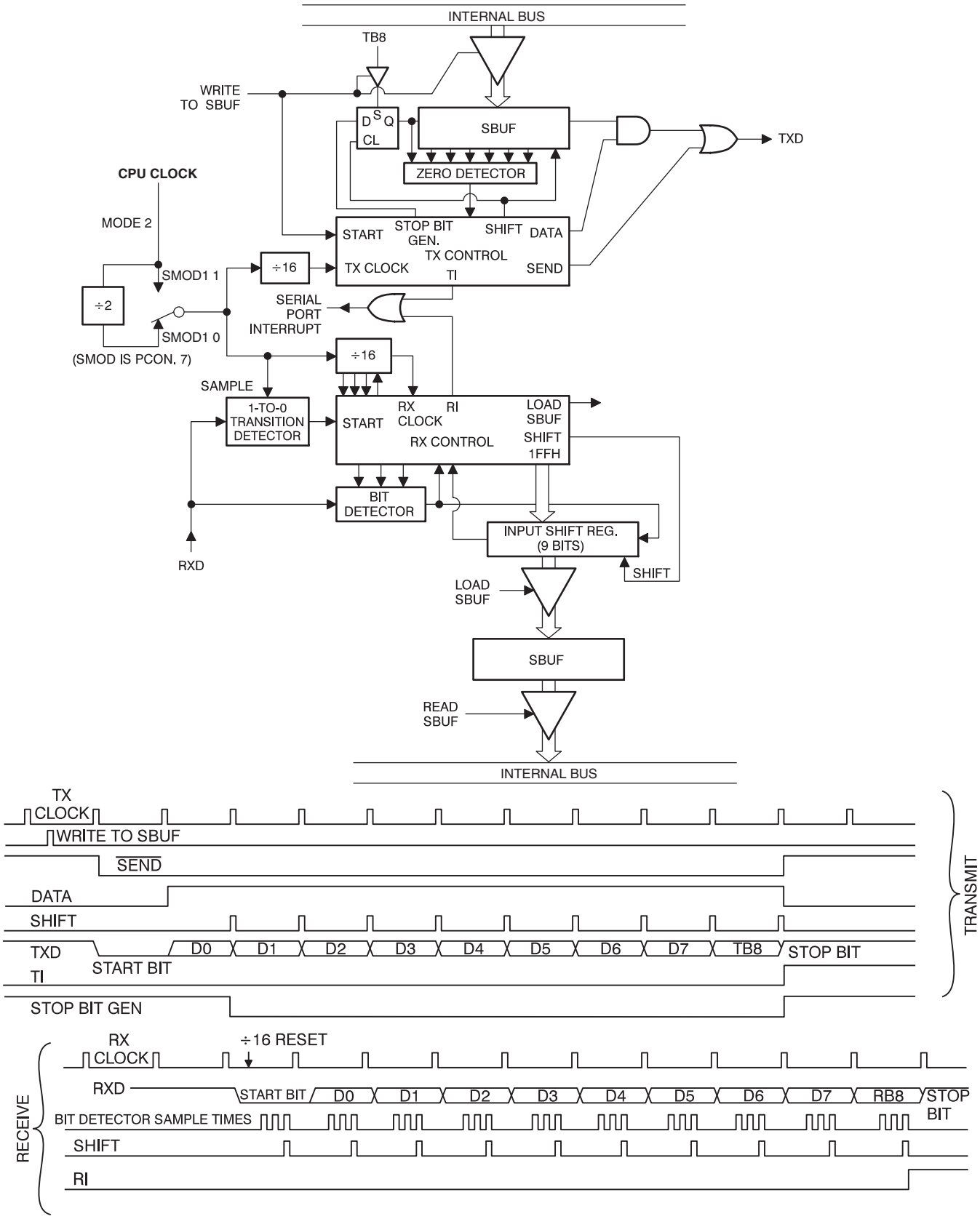

Figure 18-4. Serial Port Mode 3

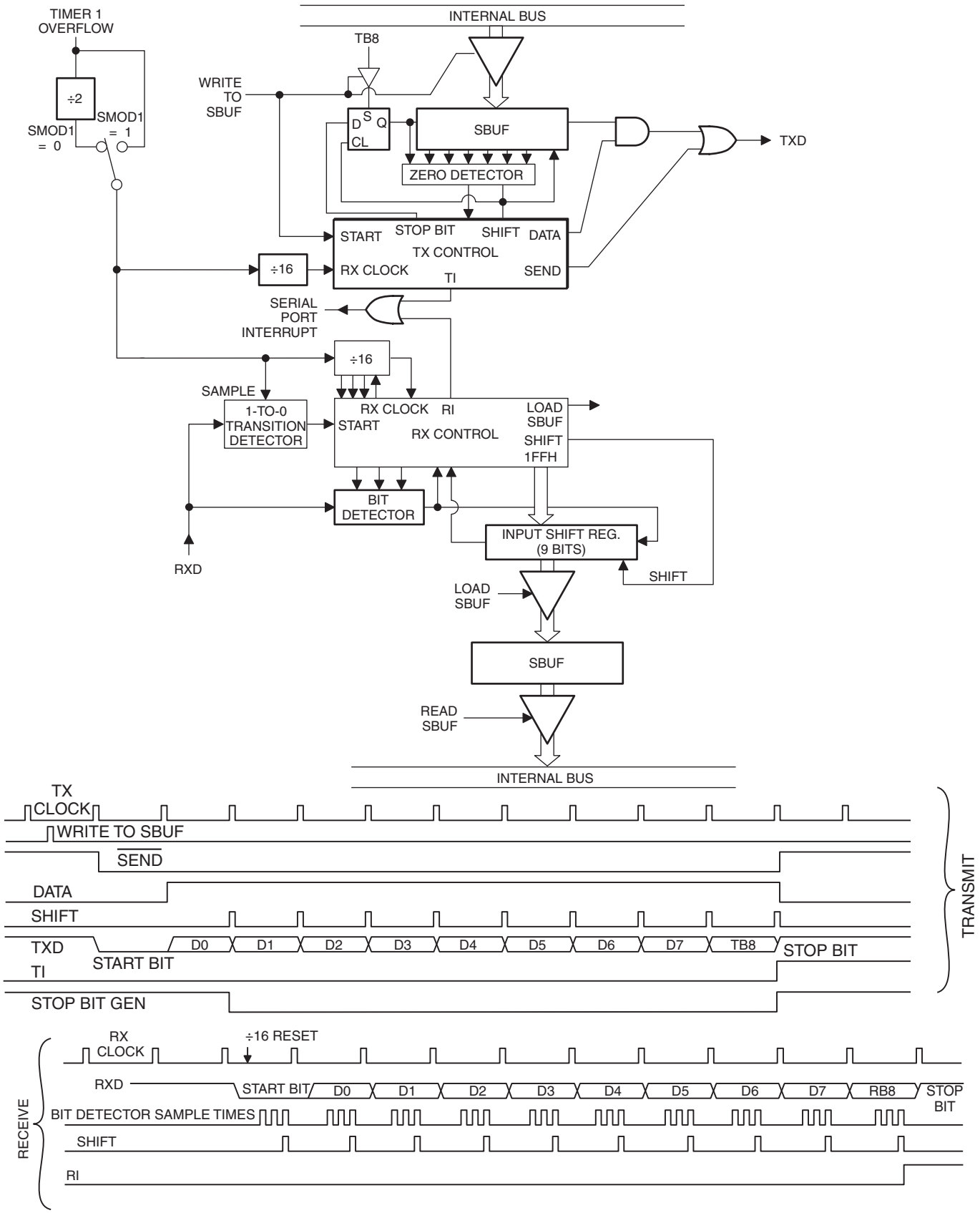

18.6 Framing Error Detection

When used for framing error detect, the UART looks for missing stop bits in the communication. A missing bit will set the FE bit in the SCON register. The FE bit shares the SCON.7 bit with SM0 and the function of SCON.7 is determined by PCON.6 (SMOD0). If SMOD0 is set then SCON.7 functions as FE. SCON.7 functions as SM0 when SMOD0 is cleared. When used as FE, SCON.7 can only be cleared by software.

18.7 Automatic Address Recognition

Automatic Address Recognition is a feature which allows the UART to recognize certain addresses in the serial bit stream by using hardware to make the comparisons. This feature saves a great deal of software overhead by eliminating the need for the software to examine every serial address which passes by the serial port. This feature is enabled by setting the SM2 bit in SCON. In the 9-bit UART modes, Mode 2 and Mode 3, the Receive Interrupt flag (RI) will be automatically set when the received byte contains either the “Given” address or the “Broadcast” address. The 9-bit mode requires that the 9th information bit is a “1” to indicate that the received information is an address and not data.

The 8-bit mode is called Mode 1. In this mode the RI flag will be set if SM2 is enabled and the information received has a valid stop bit following the 8 address bits and the information is either a Given or Broadcast address.

Mode 0 is the Shift Register mode and SM2 is ignored.

Using the Automatic Address Recognition feature allows a master to selectively communicate with one or more slaves by invoking the given slave address or addresses. All of the slaves may be contacted by using the Broadcast address. Two special Function Registers are used to define the slave’s address, SADDR, and the address mask, SADEN. SADEN is used to define which bits in the SADDR are to be used and which bits are “don’t care”. The SADEN mask can be logically ANDed with the SADDR to create the “Given” address which the master will use for addressing each of the slaves. Use of the Given address allows multiple slaves to be recognized while excluding others. The following examples will help to show the versatility of this scheme:

Slave 0	SADDR = 1100 0000
	SADEN = 1111 1101
	Given = 1100 00X0
Slave 1	SADDR = 1100 0000
	SADEN = 1111 1110
	Given = 1100 000X

In the previous example SADDR is the same and the SADEN data is used to differentiate between the two slaves. Slave 0 requires a “0” in bit 0 and it ignores bit 1. Slave 1 requires a “0” in bit 1 and bit 0 is ignored. A unique address for slave 0 would be 1100 0010 since slave 1 requires a “0” in bit 1. A unique address for slave 1 would be 1100 0001 since a “1” in bit 0 will exclude slave 0. Both slaves can be selected at the same time by an address which has bit 0 = 0 (for slave 0) and bit 1 = 0 (for slave 1). Thus, both could be addressed with 1100 0000.

In a more complex system the following could be used to select slaves 1 and 2 while excluding slave 0:

Slave 0	SADDR	= 1100 0000
	SADEN	= 1111 1001
	Given	= 1100 0XX0
Slave 1	SADDR	= 1110 0000
	SADEN	= 1111 1010
	Given	= 1110 0X0X
Slave 2	SADDR	= 1110 0000
	SADEN	= 1111 1100
	Given	= 1110 00XX

In the above example the differentiation among the 3 slaves is in the lower 3 address bits. Slave 0 requires that bit 0 = 0 and it can be uniquely addressed by 1110 0110. Slave 1 requires that bit 1 = 0 and it can be uniquely addressed by 1110 and 0101. Slave 2 requires that bit 2 = 0 and its unique address is 1110 0011. To select Slaves 0 and 1 and exclude Slave 2, use address 1110 0100, since it is necessary to make bit 2 = 1 to exclude slave 2.

The Broadcast Address for each slave is created by taking the logic OR of SADDR and SADEN. Zeros in this result are treated as don't cares. In most cases, interpreting the don't cares as ones, the broadcast address will be FF hexadecimal.

Upon reset SADDR (SFR address 0A9H) and SADEN (SFR address 0B9H) are loaded with "0"s. This produces a given address of all "don't cares" as well as a Broadcast address of all "don't cares". This effectively disables the Automatic Addressing mode and allows the microcontroller to use standard 80C51-type UART drivers which do not make use of this feature.

19. Serial Peripheral Interface

The serial peripheral interface (SPI) allows high-speed synchronous data transfer between the AT89LP2052/LP4052 and peripheral devices or between multiple AT89LP2052/LP4052 devices. The AT89LP2052/LP4052 SPI features include the following:

- Full-duplex, 3-wire Synchronous Data Transfer
- Master or Slave Operation
- Maximum Bit Frequency = f/4
- LSB First or MSB First Data Transfer
- Four Programmable Bit Rates in Master Mode
- End of Transmission Interrupt Flag
- Write Collision Flag Protection
- Double-buffered Receive
- Double-buffered Transmit (Enhanced Mode Only)
- Wake up from Idle Mode (Slave Mode Only)

The interconnection between master and slave CPUs with SPI is shown in Figure 19-1. The four pins in the interface are Master-In/Slave-Out (MISO), Master-Out/Slave-In (MOSI), Shift Clock (SCK), and Slave Select ($\overline{SS}$). The SCK pin is the clock output in master mode, but is the clock input in slave mode. The MSTR bit in SPCR determines the directions of MISO and MOSI. Also notice that MOSI connects to MOSI and MISO to MISO. In master mode, $\overline{SS}$/P1.4 is ignored and may be used as a general-purpose input or output. In slave mode, $\overline{SS}$ must be driven low to select an individual device as a slave. When $\overline{SS}$ is driven high, the slave's SPI port is deactivated and the MOSI/P1.5 pin can be used as a general-purpose input.

Figure 19-1. SPI Master-Slave Interconnection

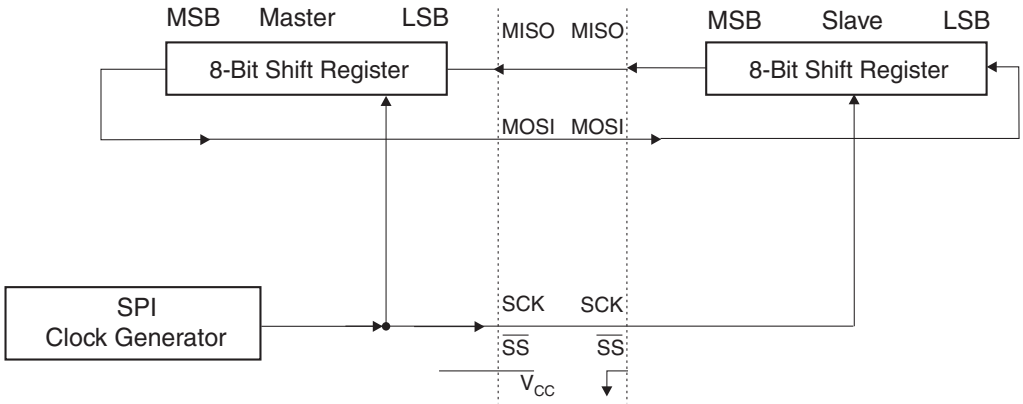

Figure 19-2. SPI Block Diagram

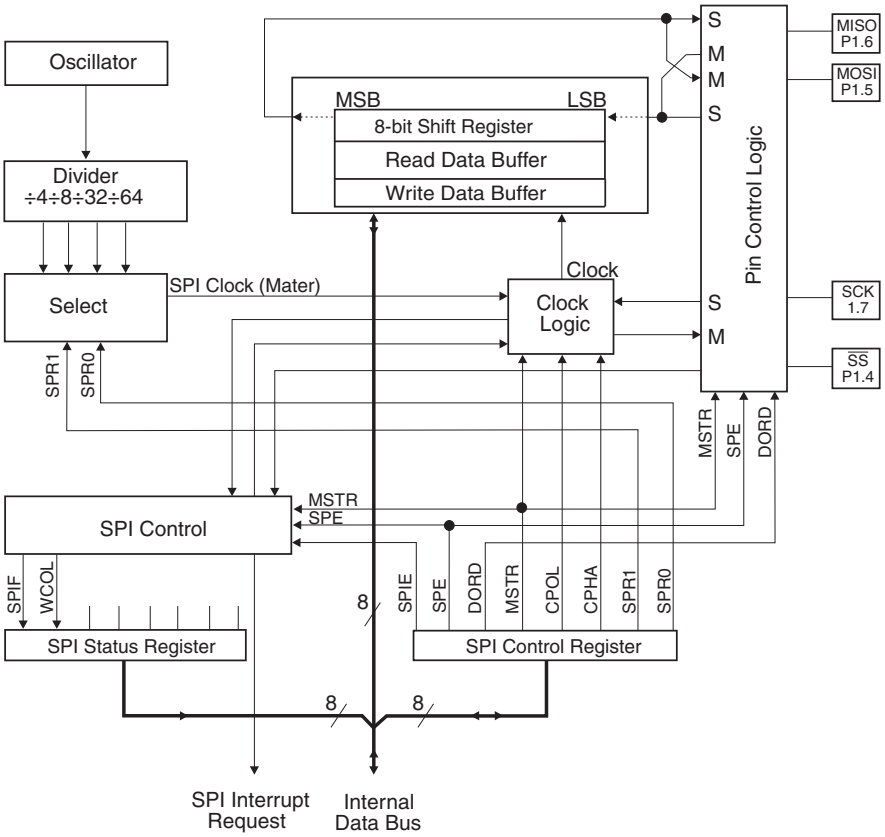

19.1 Normal Mode

The SPI has two modes of operation: normal (non-buffered write) and enhanced (buffered write). In normal mode, writing to the SPI data register (SPDR) of the master CPU starts the SPI clock generator and the data written shifts out of the MOSI pin and into the MOSI pin of the slave CPU. Transmission may start after an initial delay while the clock generator waits for the next full bit slot of the specified baud rate. After shifting one byte, the SPI clock generator stops, setting the end of transmission flag (SPIF) and transferring the received byte to the read buffer (SPDR). If both the SPI interrupt enable bit (SPIE) and the serial port interrupt enable bit (ES) are set, an interrupt is requested. Note that SPDR refers to either the write data buffer or the read data buffer, depending on whether the access is a write or read. In normal mode, because the write buffer is transparent (and a write access to SPDR will be directed to the shift buffer), any attempt to write to SPDR while a transmission is in progress will result in a write collision with WCOL set. However, the transmission will still complete normally, but the new byte will be ignored and a new write access to SPDR will be necessary.

19.2 Enhanced Mode

Enhanced mode is similar to normal mode except that the write buffer holds the next byte to be transmitted. Writing to SPDR loads the write buffer and sets WCOL to signify that the buffer is full and any further writes will overwrite the buffer. WCOL is cleared by hardware when the buffered byte is loaded into the shift register and transmission begins. If the master SPI is currently idle, i.e. if this is the first byte, then after loading SPDR, transmission of the byte starts and WCOL is cleared immediately. While this byte is transmitting, the next byte may be written to SPDR. The Load Enable flag (LDEN) in SPSR can be used to determine when transmission has started. LDEN is asserted during the first four bit slots of a SPI transfer. The master CPU should first check that LDEN is set and that WCOL is cleared before loading the next byte. In enhanced mode, if WCOL is set when a transfer completes, i.e. the next byte is available, then the SPI immediately loads the buffered byte into the shift register, resets WCOL, and continues transmission without stopping and restarting the clock generator. As long as the CPU can keep the write buffer full in this manner, multiple bytes may be transferred with minimal latency between bytes.

Table 19-1. SPCR – SPI Control Register

SPCR Address = D5H — Reset Value = 0000 0000B

Not Bit Addressable

	SPIE	SPE	DORD	MSTR	CPOL	CPHA	SPR1	SPR0
Bit	7	6	5	4	3	2	1	0

Symbol	Function
SPIE	SPI interrupt enable. This bit, in conjunction with the ES bit in the IE register, enables SPI interrupts: SPIE = 1 and ES = 1 enable SPI interrupts. SPIE = 0 disables SPI interrupts.
SPE	SPI enable. SPE = 1 enables the SPI channel and connects $\overline{SS}$, MOSI, MISO and SCK to pins P1.4, P1.5, P1.6, and P1.7. SPE = 0 disables the SPI channel.
DORD	Data order. DORD = 1 selects LSB first data transmission. DORD = 0 selects MSB first data transmission.
MSTR	Master/slave select. MSTR = 1 selects Master SPI mode. MSTR = 0 selects slave SPI mode.
CPOL	Clock polarity. When CPOL = 1, SCK is high when idle. When CPOL = 0, SCK of the master device is low when not transmitting. Please refer to figure on SPI clock phase and polarity control.
CPHA	Clock phase. The CPHA bit together with the CPOL bit controls the clock and data relationship between master and slave. Please refer to figure on SPI clock phase and polarity control.
SPR0 SPR1	SPI clock rate select. These two bits control the SCK rate of the device configured as master. SPR1 and SPR0 have no effect on the slave. The relationship between SCK and the oscillator frequency, $F_{OSC.}$, is as follows: **SPR1 SPR0 SCK** 0 0 f/4 0 1 f/8 1 0 f/32 1 1 f/64

Notes:
1. Set up the clock mode before enabling the SPI: set all bits needed in SPCR except the SPE bit, then set SPE.
2. Enable the master SPI prior to the slave device.
3. Slave echoes master on the next Tx if not loaded with new data.

Table 19-2. SPSR – SPI Status Register

SPSR Address = AAH

Reset Value = 000X X000B

Not Bit Addressable

	SPIF	WCOL	LDEN	–	–	–	DISSO	ENH
Bit	7	6	5	4	3	2	1	0

Symbol	Function
SPIF	SP interrupt flag. When a serial transfer is complete, the SPIF bit is set and an interrupt is generated if SPIE = 1 and ES = 1. The SPIF bit is cleared by reading the SPI status register followed by reading/writing the SPI data register.
WCOL	When ENH = 0: Write collision flag. The WCOL bit is set if the SPI data register is written during a data transfer. During data transfer, the result of reading the SPDR register may be incorrect, and writing to it has no effect. The WCOL bit (and the SPIF bit) are cleared by reading the SPI status register followed by reading/writing the SPI data register. When ENH = 1: WCOL works in Enhanced mode as Tx Buffer Full. Writing during WCOL = 1 in enhanced mode will overwrite the waiting data already present in the Tx Buffer. In this mode, WCOL is no longer reset by the SPIF reset but is reset when the write buffer has been unloaded into the serial shift register.
LDEN	Load enable for the Tx buffer in enhanced SPI mode. When ENH is set, it is safe to load the Tx Buffer while LDEN = 1 and WCOL = 0. LDEN is high during bits 0 - 3 and is low during bits 4 - 7 of the SPI serial byte transmission time frame.
DISSO	Disable slave output bit. When set, this bit causes the MISO pin to be tri-stated so more than one slave device can share the same interface with a single master. Normally, the first byte in a transmission could be the slave address and only the selected slave should clear its DISSO bit.
ENH	Enhanced SPI mode select bit. When ENH = 0, SPI is in normal mode, i.e. without write double buffering. When ENH = 1, SPI is in enhanced mode with write double buffering. The Tx buffer shares the same address with the SPDR register.

Table 19-3. SPDR – SPI Data Register

SPDR Address = 86H

Reset Value = 00H (after cold reset)
unchanged (after warm reset)

Not Bit Addressable

	SPD7	SPD6	SPD5	SPD4	SPD3	SPD2	SPD1	SPD0
Bit	7	6	5	4	3	2	1	0

Figure 19-3. SPI Shift Register Diagram

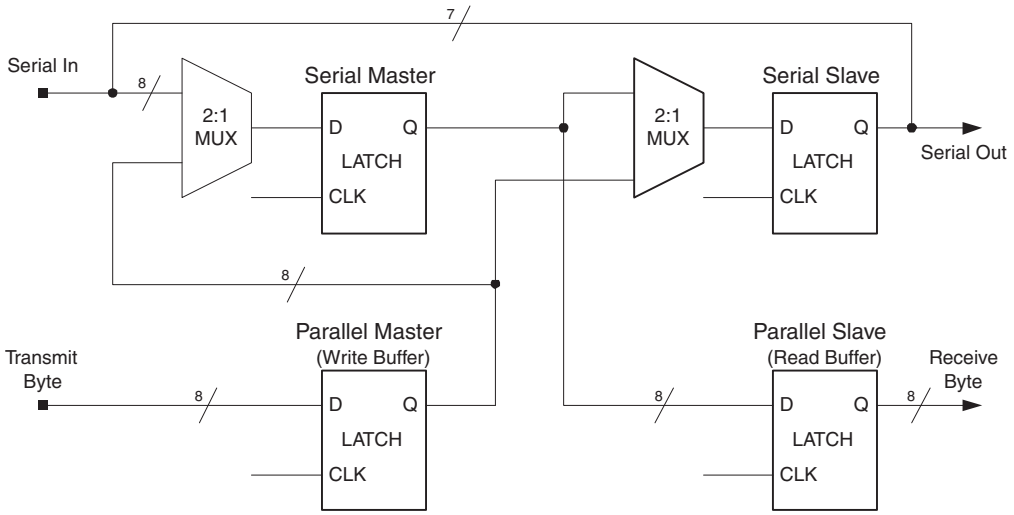

19.3 Serial Clock Generator

The CPHA (Clock PHAse), CPOL (Clock POLarity), and SPR (Serial Peripheral clock Rate = baud rate) bits in SPCR control the shape and rate of SCK. The two SPR bits provide four possible clock rates when the SPI is in master mode. In slave mode, the SPI will operate at the rate of the incoming SCK as long as it does not exceed the maximum bit rate. There are also four possible combinations of SCK phase and polarity with respect to the serial data. CPHA and CPOL determine which format is used for transmission. The SPI data transfer formats are shown in Figures 19-4 and and 19-5. To prevent glitches on SCK from disrupting the interface, CPHA, CPOL, and SPR should be set up before the interface is enabled, and the master device should be enabled before the slave device(s).

Figure 19-4. SPI Transfer Format with CPHA = 0

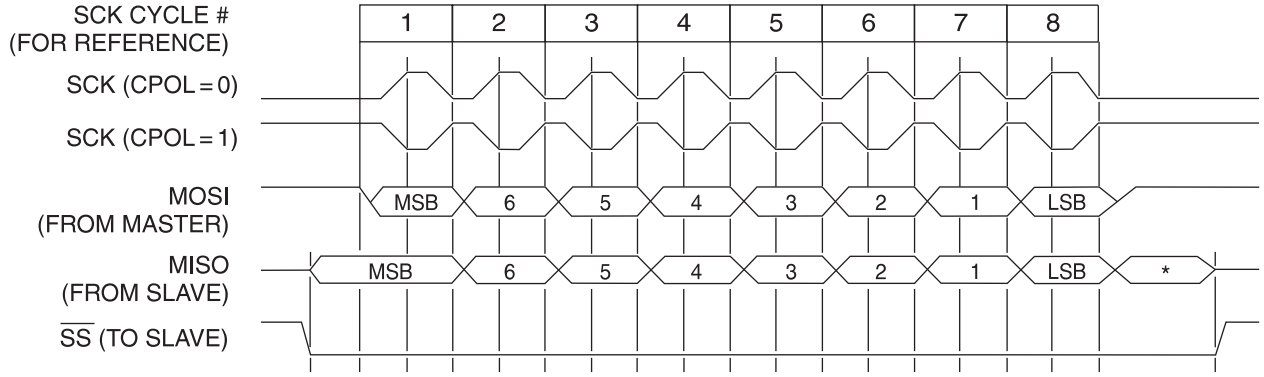

Note: *Not defined but normally MSB of character just received

Figure 19-5. SPI Transfer Format with CPHA = 1

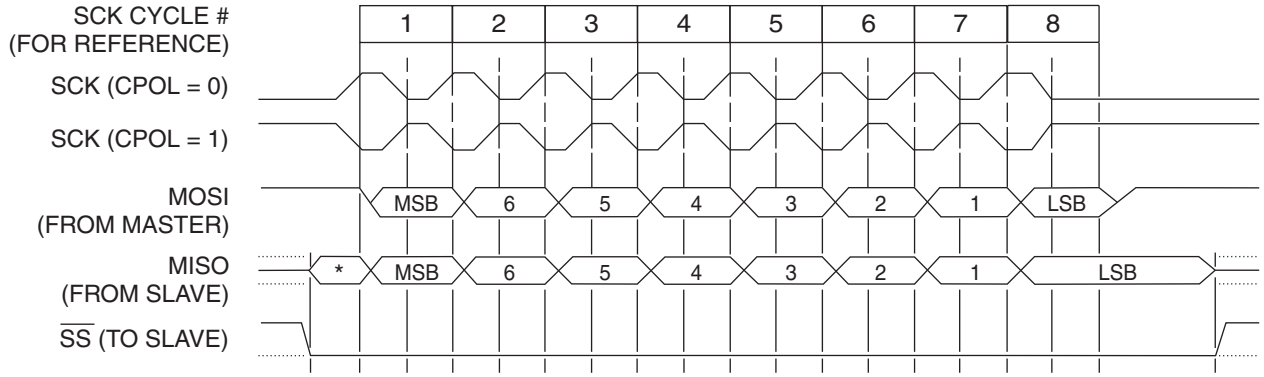

Note: *Not defined but normally LSB of previously transmitted character

19.4 SPI Pin Configuration

Before using the Serial Peripheral Interface the four SPI pins – SCK, MISO, MOSI and $\overline{SS}$ – must be properly configured for the desired functionality. See Section 15.7 “Port Alternate Functions” on page 23. When the SPI is in Master mode, SCK and MOSI must be configured as bidirectional or output, with P1.7 and P1.5 set to “1”. MISO should be input-only, or bidirectional with P1.6 set to “1”. When the SPI is in Slave mode, SCK, MOSI and SS must be configured as input-only, or as bidirectional with P1.7, P1.6 and P1.4 set to “1”. MISO should be set as bidirectional or output, with P1.6 set to “1”. If all four pins are set as bidirectional and their respectively port bits are all “1”, it is possible to switch between Master and Slave mode without reconfiguring the pins.

20. Analog Comparator

A single analog comparator is provided on the AT89LP2052/LP4052. Comparator operation is such that the output is a logic “1” when the positive input AIN0 (P1.0) is greater than the negative input AIN1 (P1.1). Otherwise, the output is a zero. Setting the CEN bit in ACSR enables the comparator. When the comparator is first enabled, the comparator output and interrupt flag are guaranteed to be stable only after 10 µs. The corresponding comparator interrupt should not be enabled during that time, and the comparator interrupt flag must be cleared before the interrupt is enabled in order to prevent an immediate interrupt service. Before enabling the comparator the analog inputs should be tri-stated by putting P1.0 and P1.1 into input-only mode. See Section 15.5 “Port 1 Analog Functions” on page 22.

The comparator output is internally tied to the P3.6 pin. Instructions which read the pins of P3 will also read the comparator output directly. Read-Modify-Write instructions or Write instructions to P3.6 will access bit 6 of the Port 3 register without affecting the comparator.

The comparator may be configured to cause an interrupt under a variety of output value conditions by setting the CM bits in ACSR. The comparator interrupt flag CF in ACSR is set whenever the comparator output matches the condition specified by CM. The flag may be polled by software or may be used to generate an interrupt and must be cleared by software. The EC bit in IE must be set before CF will generate an interrupt.

20.1 Comparator Interrupt with Debouncing

The comparator output is sampled every clock cycle. The conditions on the analog inputs may be such that the comparator output will toggle excessively. This is especially true if applying slow moving analog inputs. Three debouncing modes are provided to filter out this noise. In debouncing mode, the comparator uses Timer 1 to modulate its sampling time. When a relevant transition occurs, the comparator waits until two Timer 1 overflows have occurred before resampling the output. If the new sample agrees with the expected value, CF is set. Otherwise the event is ignored. The filter may be tuned by adjusting the time-out period of Timer 1. Because Timer 1 is free running, the debouncer must wait for two overflows to guarantee that the sampling delay is at least 1 time-out period. Therefore after the initial edge event, the interrupt may occur between 1 and 2 time-out periods later. See Figure 20-1.

By default the comparator is disabled during Idle mode. To allow the comparator to function during Idle, the CIDL bit in ACSR must be set. When CIDL is set, the comparator can be used to wake-up the CPU from Idle if the comparator interrupt is enabled. The comparator is always disabled during Power-down mode.

Figure 20-1. Negative Edge with Debouncing Example

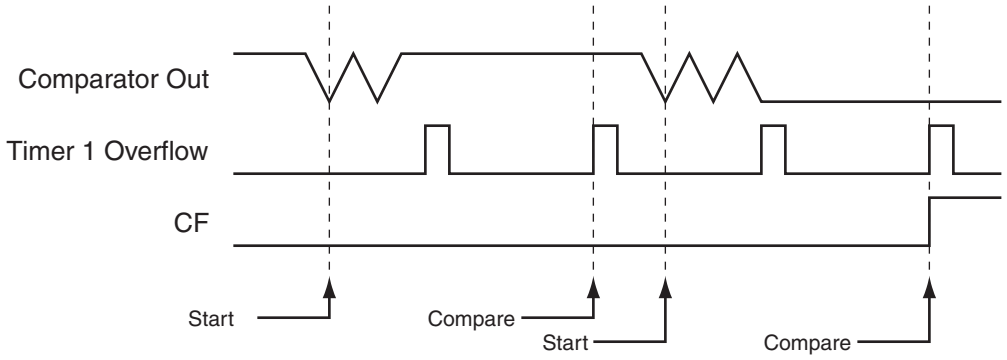

Table 20-1. ACSR – Analog Comparator Control & Status Register

ACSR = 97H — Reset Value = XXX0 0000B

Not Bit Addressable

	–	–	CIDL	CF	CEN	CM2	CM1	CM0
Bit	7	6	5	4	3	2	1	0

Symbol	Function
CIDL	Comparator Idle Enable. If CIDL = 1 the comparator will continue to operate during Idle mode. If CIDL = 0 the comparator is powered down during Idle mode. The comparator is always shut down during Power-down mode.
CF	Comparator Interrupt Flag. Set when the comparator output meets the conditions specified by the CM [2:0] bits and CEN is set. The flag must be cleared by software. The interrupt may be enabled/disabled by setting/clearing bit 6 of IE.
CEN	Comparator Enable. Set this bit to enable the comparator. Clearing this bit will force the comparator output low and prevent further events from setting CF.
CM [2:0]	Comparator Interrupt Mode **2 1 0 Interrupt Mode** 0 0 0 Negative (Low) level 0 0 1 Positive edge 0 1 0 Toggle with debounce 0 1 1 Positive edge with debounce 1 0 0 Negative edge 1 0 1 Toggle 1 1 0 Negative edge with debounce 1 1 1 Positive (High) level

21. Programmable Watchdog Timer

The programmable Watchdog Timer (WDT) protects the system from incorrect execution by triggering a system reset when it times out after the software has failed to feed the timer prior to the timer overflow. The WDT counts CPU clock cycles. The prescaler bits, PS0, PS1 and PS2 in SFR WDTCON are used to set the period of the Watchdog Timer from 16K to 2048K clock cycles. The WDT is disabled by Reset and during Power-down mode. When the WDT times out without being serviced, an internal RST pulse is generated to reset the CPU. See Table 21-1 for the available WDT period selections.

Table 21-1. Watchdog Timer Time-out Period Selection

WDT Prescaler Bits			Period* (Clock Cycles)
PS2	PS1	PS0	
0	0	0	16K
0	0	1	32K
0	1	0	64K
0	1	1	128K
1	0	0	256K
1	0	1	512K
1	1	0	1024K
1	1	1	2048K

Note: *The WDT time-out period is dependent on the system clock frequency.

The Watchdog Timer consists of a 14-bit timer with 7-bit programmable prescaler. Writing the sequence 1EH/E1H to the WDTRST register enables the timer. When the WDT is enabled, the WDTEN bit in WDTCON will be set to “1”. To prevent the WDT from generating a reset when if overflows, the watchdog feed sequence must be written to WDTRST before the end of the time-out period. To feed the watchdog, two write instructions must be sequentially executed successfully. Between the two write instructions, SFR reads are allowed, but writes are not allowed. The instructions should move 1EH to the WDTRST register and then 1EH to the WDTRST register. An incorrect feed or enable sequence will cause an immediate watchdog reset. The program sequence to feed or enable the watchdog timer is as follows:

```
MOV WDTRST, #01Eh
MOV WDTRST, #0E1h
```

Table 21-2. WDTCON – Watchdog Control Register

WDTCON Address = A7H — Reset Value = 0000 XX00B

Not Bit Addressable

	PS2	PS1	PS0	WDIDLE	–	–	WDTOVF	WDTEN
Bit	7	6	5	4	3	2	1	0

Symbol	Function
PS2 PS1 PS0	Prescaler bits for the watchdog timer (WDT). When all three bits are cleared to 0, the watchdog timer has a nominal period of 16K clock cycles. When all three bits are set to 1, the nominal period is 2048K clock cycles.
WDIDLE	Disable/enable the Watchdog Timer in IDLE mode. When WDIDLE = 0, WDT continues to count in IDLE mode. When WDIDLE = 1, WDT freezes while the device is in IDLE mode.
WDTOVF	Watchdog Overflow Flag. Set when a WDT reset is generated by the WDT timer overflow. Also set when an incorrect sequence is written to WDTRST. Must be cleared by software.
WDTEN	Watchdog Enable Flag. This bit is READ-ONLY and reflects the status of the WDT (whether it is running or not). The WDT is disabled after any reset and must be re-enabled by writing 1EH/E1H to WDTRST

Table 21-3. WDTRST – Watchdog Reset Register

WDTCON Address = A6H — **(Write-Only)**

Not Bit Addressable

	–	–	–	–	–	–	–	–
Bit	7	6	5	4	3	2	1	0

The WDT is enabled by writing the sequence 1EH/E1H to the WDTRST SFR. The current status may be checked by reading the WDTEN bit in WDTCON. To prevent the WDT from resetting the device, the same sequence 1EH/E1H must be written to WDTRST before the time-out interval expires.

22. Instruction Set Summary

The AT89LP2052/LP4052 is fully binary compatible with the MCS-51 instruction set. The difference between the AT89LP2052/LP4052 and the standard 8051 is the number of cycles required to execute an instruction. Instructions in the AT89LP2052/LP4052 may take 1, 2, 3 or 4 clock cycles to complete. The execution times of most instructions may be computed using Table 22-1.

Table 22-1. Generic Instruction Execution Times and Exceptions

Instruction Type	Cycle Count
Most arithmetic, logical, bit and transfer instructions	# bytes
Branches and Calls	# bytes + 1
Single Byte Indirect (i.e. ADD A, @Ri, etc.)	2
RET, RETI	4
MOVC	3
MUL	2
DIV	4
INC DPTR	2

Table 22-2. Detailed Arithmetic Instruction Summary

Arithmetic Instruction	Bytes	Clock Cycles		Hex Code
		8051	LP2052	
ADD A, Rn	1	12	1	28-2F
ADD A, direct	2	12	2	25
ADD A, @Ri	1	12	2	26-27
ADD A, #data	2	12	2	24
ADDC A, Rn	1	12	1	38-3F
ADDC A, direct	2	12	2	35
ADDC A, @Ri	1	12	2	36-37
ADDC A, #data	2	12	2	34
SUBB A, Rn	1	12	1	98-9F
SUBB A, direct	2	12	2	95
SUBB A, @Ri	1	12	2	96-97
SUBB A, #data	2	12	2	94
INC Rn	1	12	1	08-0F
INC direct	2	12	2	05
INC @Ri	1	12	2	06-07
INC A	1	12	1	04
DEC Rn	1	12	1	18-1F
DEC direct	2	12	2	15
DEC @Ri	1	12	2	16-17
DEC A	1	12	1	14
INC DPTR	1	24	2	A3
MUL AB	1	48	2	A4
DIV AB	1	48	4	84
DA A	1	12	1	D4

Table 22-3. Detailed Logical Instruction Summary

Logical Instruction	Bytes	Clock Cycles		Hex Code
		8051	LP2052	
CLR A	1	12	1	E4
CPL A	1	12	1	F4
ANL A, Rn	1	12	1	58-5F
ANL A, direct	2	12	2	55
ANL A, @Ri	1	12	2	56-57
ANL A, #data	2	12	2	54
ANL direct, A	2	12	2	52
ANL direct, #data	3	24	3	53
ORL A, Rn	1	12	1	48-4F
ORL A, direct	2	12	2	45
ORL A, @Ri	1	12	2	46-47
ORL A, #data	2	12	2	44
ORL direct, A	2	12	2	42
ORL direct, #data	3	24	3	43
XRL A, Rn	1	12	1	68-6F
XRL A, direct	2	12	2	65
XRL A, @Ri	1	12	2	66-67
XRL A, #data	2	12	2	64
XRL direct, A	2	12	2	62
XRL direct, #data	3	24	3	63
RL A	1	12	1	23
RLC A	1	12	1	33
RR A	1	12	1	03
RRC A	1	12	1	13
SWAP A	1	12	1	C4

Table 22-4. Detailed Data Transfer Instruction Summary

Data Transfer Instruction	Bytes	Clock Cycles		Hex Code
		8051	LP2052	
MOV A, Rn	1	12	1	E8-EF
MOV A, direct	2	12	2	E5
MOV A, @Ri	1	12	2	E6-E7
MOV A, #data	2	12	2	74
MOV Rn, A	1	12	1	F8-FF
MOV Rn, direct	2	24	2	A8-AF
MOV Rn, #data	2	12	2	78-7F
MOV direct, A	2	12	2	F5
MOV direct, Rn	2	24	2	88-8F
MOV direct, direct	3	24	3	85
MOV direct, @Ri	2	24	2	86-87
MOV direct, #data	3	24	3	75
MOV @Ri, A	1	12	1	F6-F7
MOV @Ri, direct	2	24	2	A6-A7
MOV @Ri, #data	2	12	2	76-77
MOV DPTR, #data16	3	24	3	90
MOVC A, @A+DPTR	1	24	3	93
MOVC A, @A+PC	1	24	3	83
PUSH direct	2	24	2	C0
POP direct	2	24	2	D0
XCH A, Rn	1	12	1	C8-CF
XCH A, direct	2	12	2	C5
XCH A, @Ri	1	12	2	C6-C7
XCHD A, @Ri	1	12	2	D6-D7

Table 22-5. Detailed Bit Instruction Summary

Bit Instruction	Bytes	Clock Cycles		Hex Code
		8051	LP2052	
CLR C	1	12	1	C3
CLR bit	2	12	2	C2
SETB C	1	12	1	D3

Table 22-5. Detailed Bit Instruction Summary

Bit Instruction	Bytes	Clock Cycles		Hex Code
		8051	LP2052	
SETB bit	2	12	2	D2
CPL C	1	12	1	B3
CPL bit	2	12	2	B2
ANL C, bit	2	24	2	82
ANL C, /bit	2	24	2	B0
ORL C, bit	2	24	2	72
ORL C, /bit	2	24	2	A0
MOV C, bit	2	12	2	A2
MOV bit, C	2	24	2	92

Table 22-6. Detailed Branching Instruction Summary

Branching Instruction	Bytes	Clock Cycles		Hex Code
		8051	LP2052	
JC rel	2	24	3	40
JNC rel	2	24	3	50
JB bit, rel	3	24	4	20
JNB bit, rel	3	24	4	30
JBC bit, rel	3	24	4	10
JZ rel	2	24	3	60
JNZ rel	2	24	3	70
SJMP rel	2	24	3	80
ACALL addr11	2	24	3	11,31,51,71,91,B1,D1,F1
LCALL addr16	3	24	4	12
RET	1	24	4	22
RETI	1	24	4	32
AJMP addr11	2	24	3	01,21,41,61,81,A1,C1,E1
LJMP addr16	3	24	4	02
JMP @A+DPTR	1	24	2	73
CJNE A, direct, rel	3	24	4	B5
CJNE A, #data, rel	3	24	4	B4
CJNE Rn, #data, rel	3	24	4	B8-BF
CJNE @Ri, #data, rel	3	24	4	B6-B7
DJNZ Rn, rel	2	24	3	D8-DF
DJNZ direct, rel	3	24	4	D5
NOP	1	12	1	00

23. Programming the Flash Memory

The AT89LP2052/LP4052 offers 2/4K bytes of In-System Programmable (ISP) non-volatile Flash code memory. In addition, the device contains a 32-byte User Signature Row and a 32-byte read-only Atmel Signature Row. The memory organization is shown in Table 23-1. The Memory is divided into pages of 32 bytes each. A single read or write command may only access a single page in the memory.

Table 23-1. Memory Organization

Device #	Code Size	Page Size	# Pages	Address Range
AT89LP2052	2K bytes	32 bytes	64	0000H - 07FFH
AT89LP4052	4K bytes	32 bytes	128	0000H - 0FFFH

The AT89LP2052/LP4052 provides two flexible interfaces for programming the Flash memory: a parallel interface which uses 10 pins; and a serial interface which uses the 4 SPI pins. The parallel and serial programming algorithms are identical. Both interfaces support the same command format where each command is issued to the device one byte at a time. Commands consist of a preamble byte for noise immunity, an opcode byte, two address bytes, and from 1 to 32 data bytes. Figure 23-1 shows a simplified flow chart of a command sequence.

Figure 23-1. Command Sequence Flow Chart

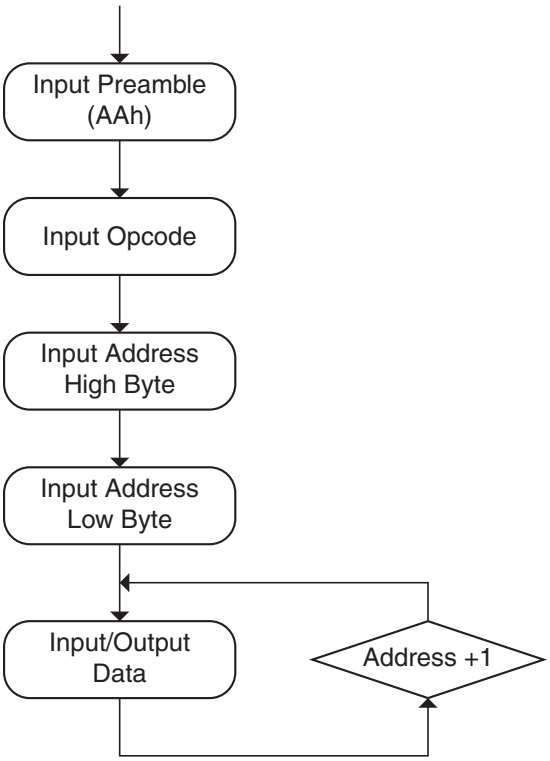

23.1 Programming Command Summary

Command	Preamble	Opcode	Addr High	Addr Low	Data 0	Data n
Program Enable[1]	1010 1010	1010 1100	0101 0011			
Chip Erase	1010 1010	1000 1010				
Read Status	1010 1010	0110 0000	xxxx xxxx	xxxx xxxx	Status Out	
Load Code **Page Buffer**[2]	1010 1010	0101 0001	xxxx xxxx	xxxB BBBB	DataIn 0 ... DataIn n	
Write Code **Page**[2]	1010 1010	0101 0000	xxxx AAAA	AAAB BBBB	DataIn 0 ... DataIn n	
Read Code **Page**[2]	1010 1010	0011 0000	xxxx AAAA	AAAB BBBB	DataOut 0 ... DataOut n	
Write User Fuses[3]	1010 1010	1110 0001	xxxx xxxx	xxxx xxxx	xxxx FFFF	
Read User Fuses[3]	1010 1010	0110 0001	xxxx xxxx	xxxx xxxx	xxxx FFFF	
Write Lock Bits[4]	1010 1010	1110 0100	xxxx xxxx	xxxx xxxx	xxxx xxLL	
Read Lock Bits[4]	1010 1010	0110 0100	xxxx xxxx	xxxx xxxx	xxxx xxLL	
Write User Signature Page[2]	1010 1010	0101 0010	xxxx xxxx	xxxB BBBB	DataIn 0 ... DataIn n	
Read User Signature Page[2]	1010 1010	0011 0010	xxxx xxxx	xxxB BBBB	DataOut 0 ... DataOut n	
Read Atmel Signature Page[2][5]	1010 1010	0011 1000	xxxx xxxx	xxxB BBBB	DataOut 0 ... DataOut n	

Notes:
1. Program Enable must be the **first** command issued after entering into programming mode.
2. Any number of Data bytes from 1 to 32 may be written/read. The internal address is incremented between each byte.
3. **Fuse Bit Definitions**:

Bit 0	ISP Enable*	Enable = 0/Disable = 1
Bit 1	XTAL Osc Bypass	Enable = 0/Disable = 1
Bit 2	User Row Programming	Enable = 0/Disable = 1
Bit 3	System Clock Out	Enable = 0/Disable = 1

*The AT89LP2052/LP4052 has ISP enabled by default from the factory. However, if ISP is later disabled, the ISP Enable Fuse must be enabled by using Parallel Programming before entering ISP mode.
When disabling the ISP fuse during ISP, the current ISP session will remain active until RST is brought low.

4. **Lock Bit Definitions**:

Bit 0	Lock Bit 1	Locked = 0/Unlocked = 1
Bit 1	Lock Bit 2	Locked = 0/Unlocked = 1

5. **Atmel Signature Byte**:

AT89LP2052: Address 00H = 1EH
01H = 25H
02H = FFH

AT89LP4052: Address 00H = 1EH
01H = 45H
02H = FFH

6. **Symbol Key**:

A: Page Address Bit
B: Byte Address Bit
F: Fuse Bit Data
L: Lock Bit Data
x: Don't Care

23.2 Status Register

The current state of the memory may be accessed by reading the status register. The status register is shown in Table 23-2.

Table 23-2. Status Register

	–	–	–	–	$\overline{\text{LOAD}}$	SUCCESS	$\overline{\text{WRTINH}}$	$\overline{\text{BUSY}}$
Bit	7	6	5	4	3	2	1	0

Symbol	Function
$\overline{\text{LOAD}}$	Load flag. Cleared low by the load page buffer command and set high by the next memory write. This flag signals that the page buffer was previously loaded with data by the load page buffer command.
SUCCESS	Success flag. Cleared low at the start of a programming cycle and will only be set high if the programming cycle completes without interruption from the brownout detector.
$\overline{\text{WRTINH}}$	Write Inhibit flag. Cleared low by the brownout detector (BOD) whenever programming is inhibited due to V_{CC} falling below the minimum required programming voltage. If a BOD episode occurs during programming, the SUCCESS flag will remain low after the cycle is complete. $\overline{\text{WRTINH}}$ low also forces $\overline{\text{BUSY}}$ low.
$\overline{\text{BUSY}}$	Busy flag. Cleared low whenever the memory is busy programming or if write is currently inhibited.

23.3 $\overline{\text{DATA}}$ Polling

The AT89LP2052/LP4052 implements $\overline{\text{DATA}}$ polling to indicate the end of a programming cycle. While the device is busy, any attempted read of the last byte written will return the data byte with the MSB complemented. Once the programming cycle has completed, the true value will be accessible. During Erase the data is assumed to be FFH and $\overline{\text{DATA}}$ polling will return 7FH. When writing multiple bytes in a page, the $\overline{\text{DATA}}$ value will be the last data byte loaded before programming begins, not the written byte with the highest physical address within the page.

23.4 Parallel Programming

Parallel Programming Mode is enabled by applying V_{PP} to the RST pin. The connections required during parallel mode are shown in Figure 23-2. During parallel programming, Port 1 is configured as an 8-bit wide bidirectional command bus. Data on P1 is strobed by a positive pulse on the XTAL1 pin. No other clock is required. The interface is enabled by pulling $\overline{\text{CS}}$ (P3.2) low. P3.1 acts as RDY/$\overline{\text{BSY}}$, and will be pulled low to indicate that the device is busy regardless of the state of $\overline{\text{CS}}$.

Figure 23-2. Flash Parallel Programming Device Connections

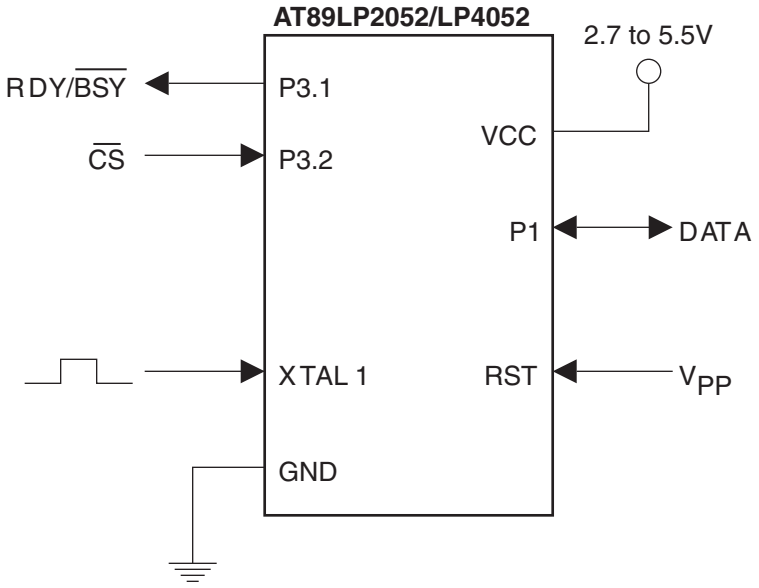

Note: Sampling of pin P3.1 (RDY/$\overline{BSY}$) is optional. During Parallel Programming, P3.1 will be pulled low while the device is busy. Note that it does not require an external passive pull-up to V_{CC}.

While $\overline{CS}$ is high, the interface is reset to its default state and P1 is tri-stated. $\overline{CS}$ should be brought low before the first byte of a command is issued, and should return high only after the last byte of the command has been strobed. Figure 23-3 shows a generic parallel write command sequence. Command, address, and data bytes are sampled from P1 on the rising edge of the XTAL1 pulse. Figure 23-4 shows a generic parallel read command sequence. Command and address bytes are sampled from P1 on the rising edge of the XTAL1 pulse. At the falling edge of the fourth XTAL1 pulse the device enables P1 to output data. The data remains on P1 until $\overline{CS}$ is brought high. During reads the parallel programmer should tri-state P1 before the negative edge of the fourth XTAL1 pulse to avoid bus contention.

Figure 23-3. Parallel Write Command Sequence

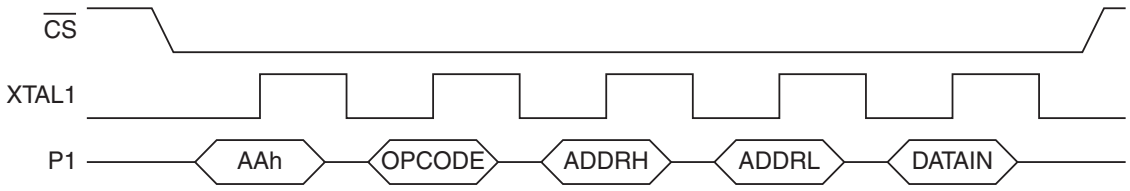

Figure 23-4. Parallel Read Command Sequence

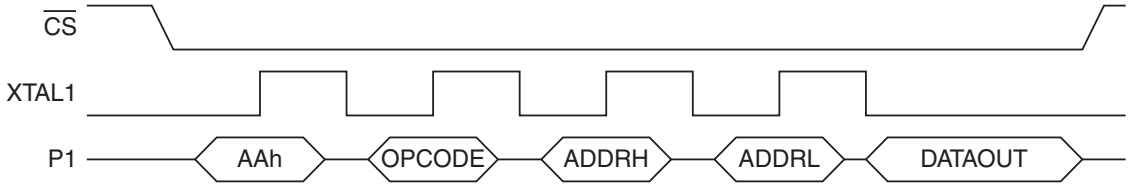

23.4.1 Power-up Sequence

Execute the following sequence to power-up the device **before** parallel programming.

1. Apply power between VCC and GND pins.
2. After V_{CC} has settled, wait 10 µs and bring RST to “H”.
3. Wait 2 ms for the internal Power-on Reset to time out.
4. Bring P3.2 to “H” and then wait 10 µs.
5. Raise RST/V_{PP} to 12V to enable the parallel programming modes.
6. After V_{PP} has settled, wait an additional 10 µs before programming.

Figure 23-5. Parallel Mode Power-up Operation

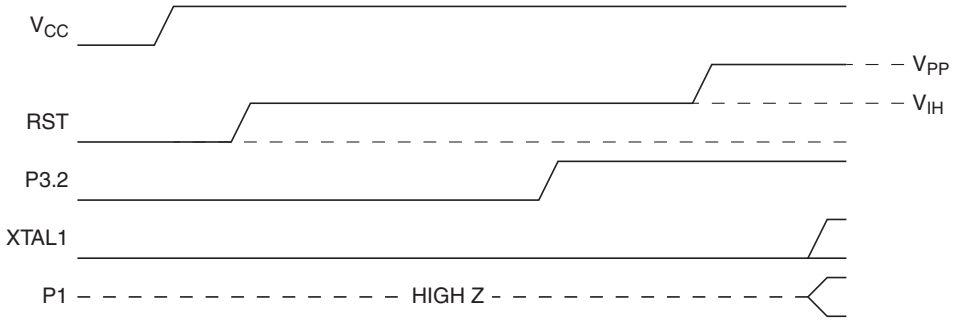

23.4.2 Power-down Sequence

Execute the following sequence to power-down the device **after** parallel programming.

1. Tri-state P1.
2. Bring RST/V_{PP} down from 12V to V_{CC} and wait 10 µs.
3. Bring XTAL and P3.2 to “L”.
4. Bring RST to “L” and wait 10 µs.
5. Power off V_{CC}.

Figure 23-6. Parallel Mode Power-down Operation

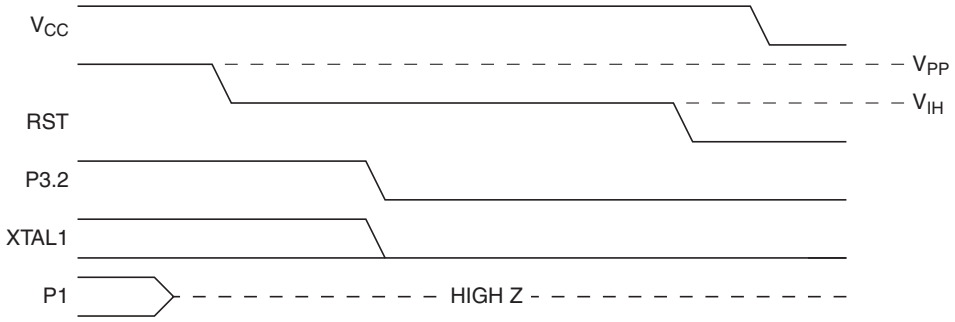

Note: The waveforms on this page are not to scale.

23.4.3 Program Enable

Function:

- Enables the programming interface to receive commands.
- Program Enable must be the first command issued in any programming session. In parallel programming a session is active while RST remains at V_{PP}. In serial programming a session is active while RST remains at V_{CC}.

Usage:

1. Bring $\overline{CS}$ (P3.2) low.
2. Drive P1 to AAh and pulse XTAL1 high.
3. Drive P1 to ACh and pulse XTAL1 high.
4. Drive P1 to 53h and pulse XTAL1 high.
5. Bring $\overline{CS}$ high.

Figure 23-7. Program Enable Sequence

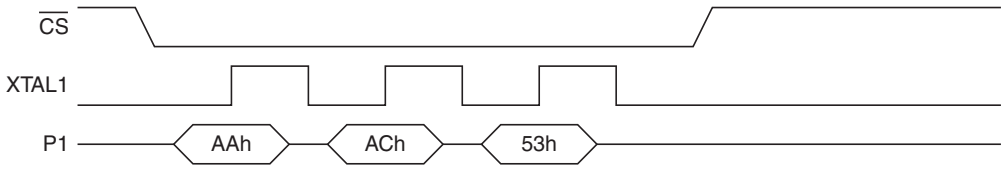

23.4.4 Chip Erase

Function:

- Erases (programs FFh to) the entire 2/4-Kbyte memory array.
- Erases User Signature Row if User Row Programming Fuse bit is enabled.
- Lockbit1 and Lockbit2 are programmed to “unlock” state.

Usage:

1. Bring $\overline{CS}$ (P3.2) low.
2. Drive P1 to AAh and pulse XTAL1 high.
3. Drive P1 to 8Ah and pulse XTAL1 high.
4. Bring $\overline{CS}$ high.
5. Wait 4 ms, monitor P3.1, or poll data/status.

Figure 23-8. Chip Erase Sequence

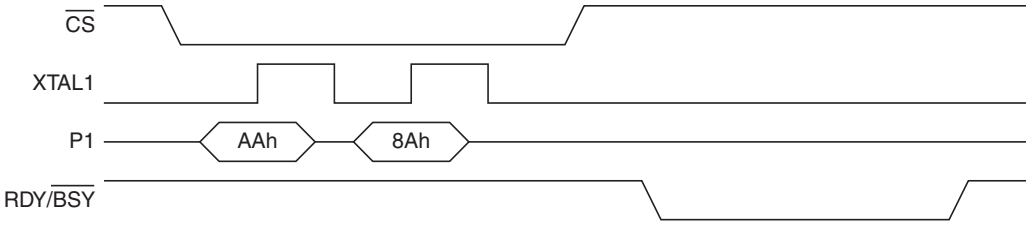

Note: The waveforms on this page are not to scale.

23.4.5 Load Code Page Buffer

Function:

- Loads 1 page (1 to 32 bytes) of data into the temporary page buffer but does not start programming.
- Use for interruptible loads or loading non-contiguous bytes to a page.
- The byte address (offset in page) is initialized to bits [4:0] of the low address byte. One byte of data is loaded from P1 for the current address by the positive edge of a XTAL1 pulse. The internal address is incremented by one on the negative edge of the XTAL1 pulse. The address will wrap around to the 1st byte of the page when incremented past 31, however previously loaded bytes should not be re-loaded.
- The Load Page Buffer command needs to be followed by a write command as the internal buffer is not cleared until either the next write has completed or the programming session ends.
- Clears Bit 3 of the status byte to signal that the buffer contains data.

Usage:

1. Bring $\overline{CS}$ (P3.2) low.
2. Drive P1 to AAh and pulse XTAL1 high.
3. Drive P1 to 51h and pulse XTAL1 high.
4. Drive P1 to 00h and pulse XTAL1 high.
5. Drive P1 with bits [4:0] of address and pulse XTAL1 high.
6. To load data bytes, drive data on P1 and pulse XTAL1 high to load one byte and increment to the next address. Repeat for additional bytes. Only 1-32 bytes may be programmed at one time, including any bytes loaded by a previous load page buffer command. Bytes should not be loaded more than once.
7. Bring $\overline{CS}$ high.

Figure 23-9. Load Page Buffer Sequence

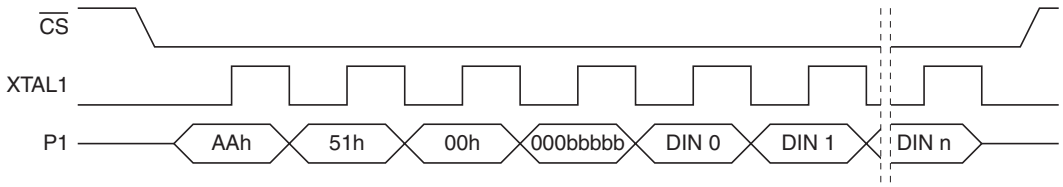

Note: The waveform on this page is not to scale.

23.4.6 Write Code Page

Function:

- Programs 1 page (1 to 32 bytes) of data into the Code Memory array.
- Page address determined by bits [11:5] of loaded address.
- The byte address (offset in page) is initialized to bits [4:0] of the low address byte. One byte of data is loaded from P1 for the current address by the positive edge of a XTAL1 pulse. The internal address is incremented by one on the negative edge of the XTAL1 pulse. The address will wrap around to the 1st byte of the page when incremented past 31, however previously loaded bytes should not be re-loaded.

Usage:

1. Bring $\overline{CS}$ (P3.2) low.
2. Drive P1 to AAh and pulse XTAL1 high.
3. Drive P1 to 50h and pulse XTAL1 high.
4. Drive P1 with bits [15:8] of address and pulse XTAL1 high.
5. Drive P1 with bits [7:0] of address and pulse XTAL1 high.
6. To write only previously loaded data, bring $\overline{CS}$ high before loading additional bytes. To load data bytes, drive data on P1 and pulse XTAL1 high to load one byte and increment to the next address. Repeat for additional bytes. Only 1-32 bytes may be programmed at one time, including any bytes loaded by a previous load page buffer command. Bytes should not be loaded more than once.
7. Bring $\overline{CS}$ high.
8. Wait 2 ms, monitor P3.1, or poll data/status.

Note: It is not possible to skip bytes while loading data during write. To load non-contiguous bytes in a page, use the Load Page Buffer command.

Figure 23-10. Write Code Page Sequence

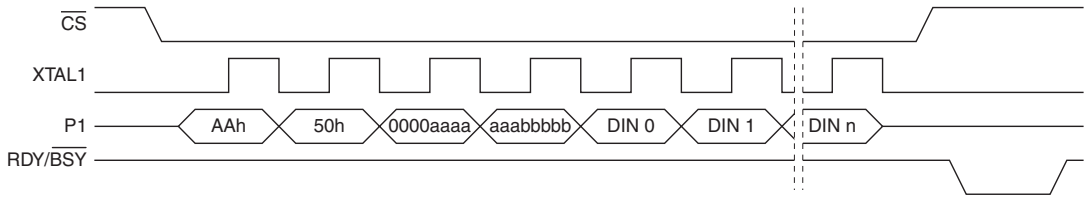

Note: The waveform on this page is not to scale.

23.4.7 Read Code Page

Function:

- Read 1 page (1 to 32 bytes) of data from the Code Memory array.
- Page address determined by bits [11:5] of loaded address.
- The byte address (offset in page) is initialized to bits [4:0] of the low address byte. The internal address is incremented by one on the negative edge of the XTAL1 pulse. The address will wrap around to the 1st byte of the page when incremented past 31.
- Read data will be output on P1 after the falling edge of fourth XTAL1 pulse (address low byte strobe). The programmer should tri-state P1 prior to this edge to avoid bus contention on P1.

Usage:

1. Bring $\overline{CS}$ (P3.2) low.
2. Drive P1 to AAh and pulse XTAL1 high.
3. Drive P1 to 30h and pulse XTAL1 high.
4. Drive P1 with bits [15:8] of address and pulse XTAL1 high.
5. Drive P1 with bits [7:0] of address and bring XTAL1 high.
6. Tri-state P1.
7. Bring XTAL1 low.
8. Read data from P1.
9. To read additional data bytes in the page, pulse XTAL1 high to increment to the next address.
10. Drive $\overline{CS}$ high.

Figure 23-11. Read Code Page Sequence

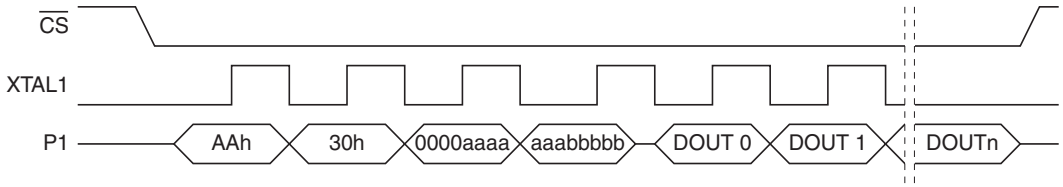

Note: The waveform on this page is not to scale.

23.4.8 Write User Signature Page

Function:

- Programs 1 to 32 bytes of data into the User Signature Row.
- The User Row Programming Fuse must be enabled before writing to the User Signature Row.
- The byte address (offset in page) is initialized to bits [4:0] of the low address byte. One byte of data is loaded from P1 for the current address by the positive edge of a XTAL1 pulse. The internal address is incremented by one on the negative edge of the XTAL1 pulse. The address will wrap around to the 1st byte of the page when incremented past 31, however previously loaded bytes should not be re-loaded.

Usage:

1. Bring $\overline{CS}$ (P3.2) low.
2. Drive P1 to AAh and pulse XTAL1 high.
3. Drive P1 to 52h and pulse XTAL1 high.
4. Drive P1 to 00h and pulse XTAL1 high.
5. Drive P1 with bits [4:0] of address and pulse XTAL1 high.
6. To write only previously loaded data, bring $\overline{CS}$ high before loading additional bytes. To load data bytes, drive data on P1 and pulse XTAL1 high to load one byte and increment to the next address. Repeat for additional bytes. Only 1-32 bytes may be programmed at one time, including any bytes loaded by a previous load page buffer command. Bytes should not be loaded more than once.
7. Bring $\overline{CS}$ high.
8. Wait 2 ms, monitor P3.1, or poll data/status.

Note: It is not possible to skip bytes while loading data during write. To load non-contiguous bytes in a page, use the Load Page Buffer command.

Figure 23-12. Write User Signature Page Sequence

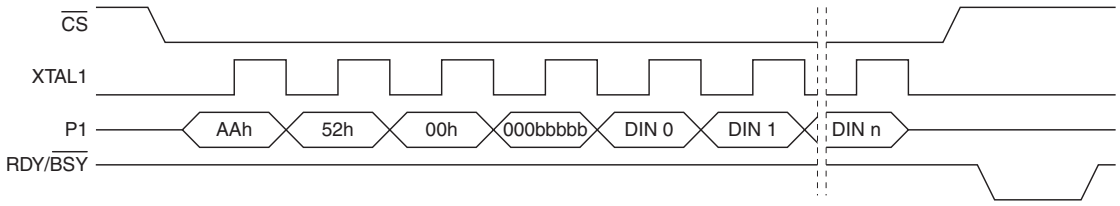

Note: The waveform on this page is not to scale.

23.4.9 Read User Signature Page

Function:

- Read 1 to 32 bytes of data from the User Signature Row.
- The byte address (offset in page) is initialized to bits [4:0] of the low address byte. The internal address is incremented by one on the negative edge of the XTAL1 pulse. The address will wrap around to the 1st byte of the page when incremented past 31.
- Read data will be output on P1 after the falling edge of fourth XTAL1 pulse (address low byte strobe). The programmer should tri-state P1 prior to this edge to avoid bus contention on P1.

Usage:

1. Bring $\overline{CS}$ (P3.2) low.
2. Drive P1 to AAh and pulse XTAL1 high.
3. Drive P1 to 32h and pulse XTAL1 high.
4. Drive P1 to 00h and pulse XTAL1 high.
5. Drive P1 with bits [4:0] of address and bring XTAL1 high.
6. Tri-state P1.
7. Bring XTAL1 low.
8. Read data from P1.
9. To read additional data bytes in the page, pulse XTAL1 high to increment to the next address.
10. Drive $\overline{CS}$ high.

Figure 23-13. Read User Signature Page Sequence

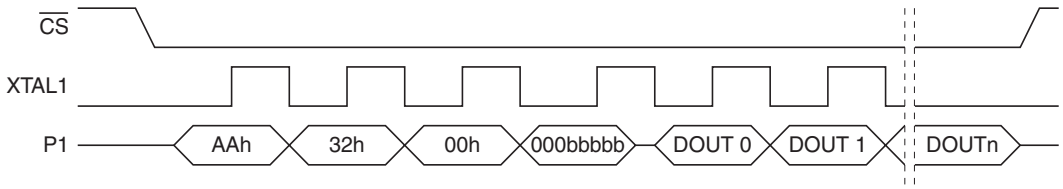

Note: The waveform on this page is not to scale.

23.4.10 Read Atmel Signature Page

Function:

- Read 1 to 32 bytes of data from the Atmel Signature Row.
- The byte address (offset in page) is initialized to bits [4:0] of the low address byte. The internal address is incremented by one on the negative edge of the XTAL1 pulse. The address will wrap around to the 1st byte of the page when incremented past 31.
- Read data will be output on P1 after the falling edge of fourth XTAL1 pulse (address low byte strobe). The programmer should tri-state P1 prior to this edge to avoid bus contention on P1.

Usage:

1. Bring $\overline{CS}$ (P3.2) low.
2. Drive P1 to AAh and pulse XTAL1 high.
3. Drive P1 to 38h and pulse XTAL1 high.
4. Drive P1 to 00h and pulse XTAL1 high.
5. Drive P1 with bits [4:0] of address and bring XTAL1 high.
6. Tri-state P1.
7. Bring XTAL1 low.
8. Read data from P1.
9. To read additional data bytes in the page, pulse XTAL1 high to increment to the next address.
10. Drive $\overline{CS}$ high.

Figure 23-14. Read Atmel Signature Page Sequence

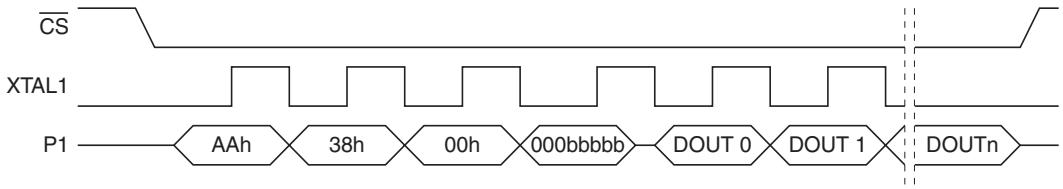

Note: The waveform on this page is not to scale.

23.4.11 Write Lock Bits

Function:

- Program (lock) Lock Bits 1 and 2.

Usage:

1. Bring $\overline{CS}$ (P3.2) low.
2. Drive P1 to AAh and pulse XTAL1 high.
3. Drive P1 to E4h and pulse XTAL1 high.
4. Drive P1 to 00h and pulse XTAL1 high.
5. Drive P1 to 00h and pulse XTAL1 high.
6. Drive data on P1 and pulse XTAL1 high.
7. Drive $\overline{CS}$ high.
8. Wait 4 ms, monitor P3.1, or poll data/status.

Figure 23-15. Write Lock Bits Sequence

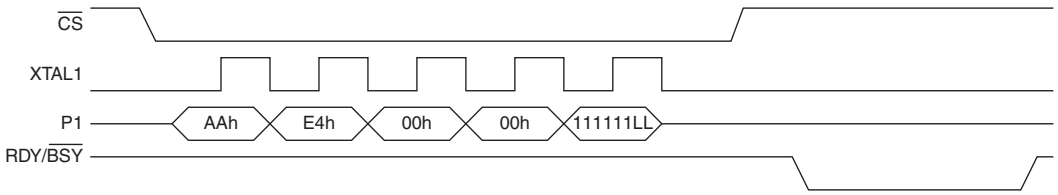

23.4.12 Read Lock Bits

Function:

- Read status of Lock Bits 1 and 2.

Usage:

1. Bring $\overline{CS}$ (P3.2) low.
2. Drive P1 to 0xAA and pulse XTAL1 high.
3. Drive P1 to 0x64 and pulse XTAL1 high.
4. Drive P1 to 0x00 and pulse XTAL1 high.
5. Drive P1 to 0x00 and bring XTAL1 high.
6. Tri-state P1.
7. Bring XTAL1 low.
8. Read data from P1.
9. Drive $\overline{CS}$ high.

Figure 23-16. Read Lock Bits Sequence

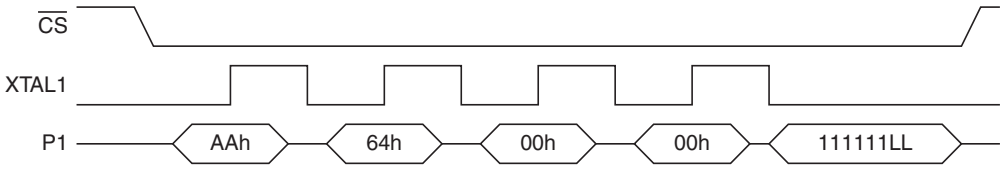

Note: The waveforms on this page are not to scale.

23.4.13 Write User Fuses

Function:

- Program User Fuses.
- Unimplemented bits should always be written with 1s.

Usage:

1. Bring $\overline{CS}$ (P3.2) low.
2. Drive P1 to AAh and pulse XTAL1 high.
3. Drive P1 to E1h and pulse XTAL1 high.
4. Drive P1 to 00h and pulse XTAL1 high.
5. Drive P1 to 00h and pulse XTAL1 high.
6. Drive data on P1 and pulse XTAL1 high.
7. Drive $\overline{CS}$ high.
8. Wait 4 ms, monitor P3.1, or poll data/status.

Figure 23-17. Write User Fuses Sequence

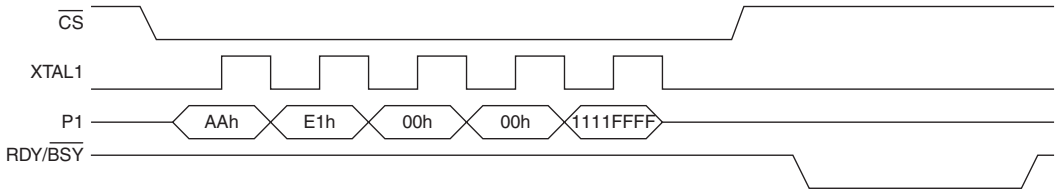

23.4.14 Read User Fuses

Function:

- Read status of User Fuses

Usage:

1. Bring $\overline{CS}$ (P3.2) low.
2. Drive P1 to 0xAA and pulse XTAL1 high.
3. Drive P1 to 0x61 and pulse XTAL1 high.
4. Drive P1 to 0x00 and pulse XTAL1 high.
5. Drive P1 to 0x00 and bring XTAL1 high.
6. Tri-state P1.
7. Bring XTAL1 low.
8. Read data from P1.
9. Drive $\overline{CS}$ high.

Figure 23-18. Read User Fuses Sequence

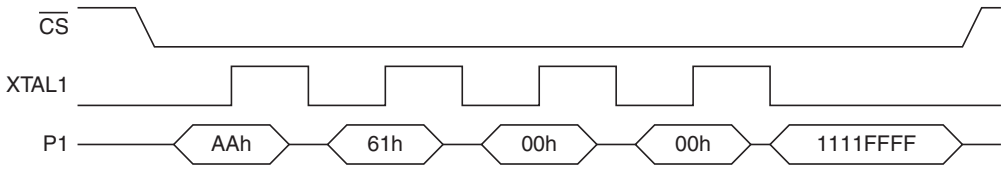

Note: The waveforms on this page are not to scale.

23.4.15 Read Status

Function:

- Read memory status byte.

Usage:

1. Bring $\overline{CS}$ (P3.2) low.
2. Drive P1 to 0xAA and pulse XTAL1 high.
3. Drive P1 to 0x60 and pulse XTAL1 high.
4. Drive P1 to 0x00 and pulse XTAL1 high.
5. Drive P1 to 0x00 and bring XTAL1 high.
6. Tri-state P1.
7. Bring XTAL1 low.
8. Read data from P1.
9. Drive $\overline{CS}$ high.

Figure 23-19. Read Status Sequence

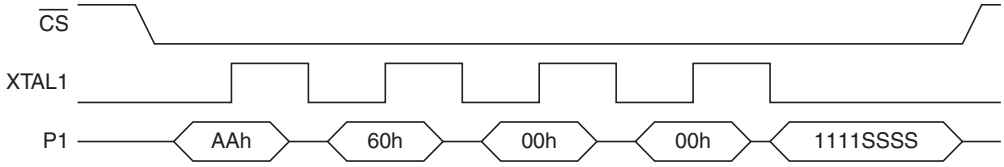

Note: The waveform on this page is not to scale.

Figure 23-20. Flash Programming and Verification Waveforms in **Parallel Mode**

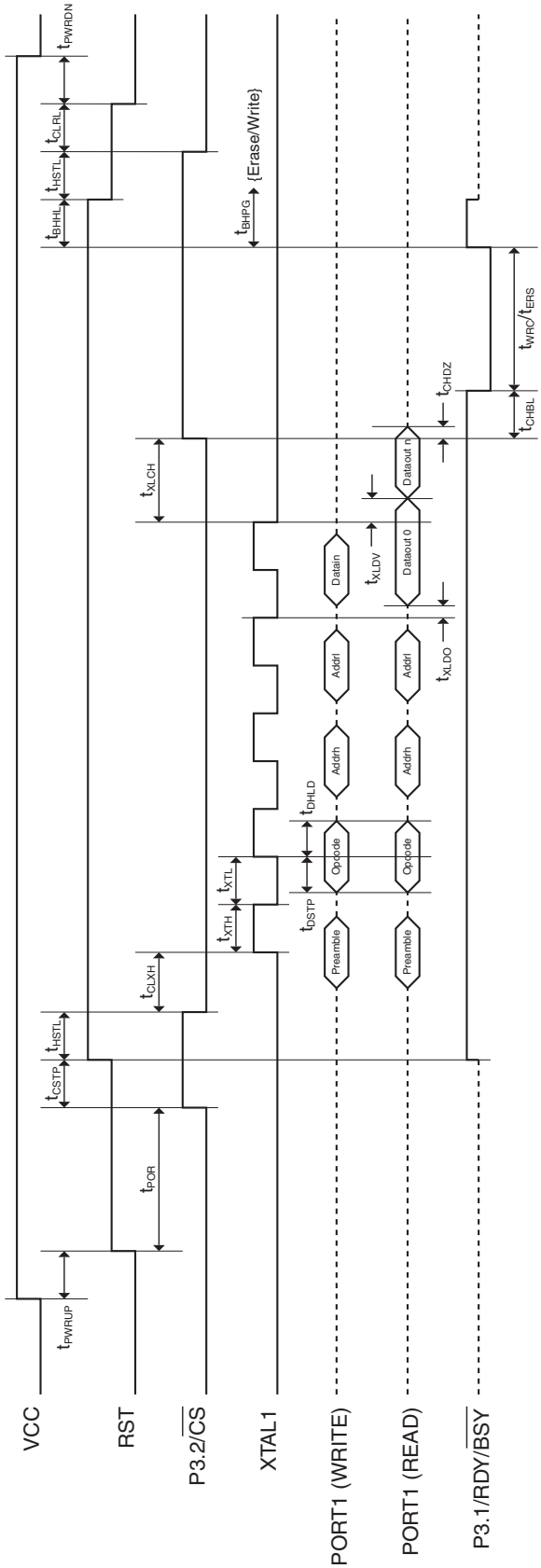

Table 23-3. Parallel Flash Programming and Verification Parameters

Symbol	Parameter	Min	Max	Units
V_{PPH}	Programming Enable Input High Voltage	11.5	12.5	V
V_{PPL}	Programming Enable Input Low Voltage	-0.5	V_{CC}	V
I_{PP}	Programming Enable Current		1.0	mA
t_{PWRUP}	Power-on to RST High	10		µs
t_{POR}	Power-on Reset Time	2		ms
t_{CSTP}	$\overline{CS}$ Setup to V_{PP} High	10		µs
t_{HSTL}	High Voltage Setting time	10		µs
t_{CLXH}	$\overline{CS}$ Low to XTAL1 High	100		ns
t_{XTH}	XTAL1 High Width	125		ns
t_{XTL}	XTAL1 Low Width	75		ns
t_{DSTP}	Data Setup to XTAL1 High	50		ns
t_{DHLD}	Data Hold after XTAL1 High	50		ns
t_{XLDO}	XTAL1 Low to Data Out	20		ns
t_{XLDV}	XTAL1 Low to Data Valid	100		ns
t_{XLCH}	XTAL1 Low to $\overline{CS}$ High	100		ns
t_{CHDZ}	$\overline{CS}$ High to Data Tri-state		20	ns
t_{CHBL}	$\overline{CS}$ High to $\overline{BUSY}$ Low		3	µs
t_{WRC}	Write Cycle Time		4.5	ms
t_{ERS}	Erase Cycle Time		9	ms
t_{BHPG}	$\overline{BUSY}$ High to Next Erase/Write	3		µs
t_{BHHI}	BUSY High to V_{PP} Off	10		µs
t_{CLRL}	$\overline{CS}$ Low to RST Low	1		µs
t_{PWRDN}	RST Low to Power Off	1		µs

23.5 In-System Programming (ISP)

The AT89LP2052/LP4052 offers a serial programming interface which may be used in place of the parallel programming interface or to program the device while in system. In this document serial programming and In-System Programming (ISP) refer to the same interface. ISP supports the same command set as parallel programming. However, during ISP command bytes are entered serially over the Serial Peripheral Interface (SPI) pins. The device connections are shown in Figure 23-21. The ISP Enable User Fuse must be enabled through Parallel Programming prior to entering the first ISP session. ISP itself may disable the ISP Fuse, however any changes to the ISP fuses will not take affect until the device has been powered down and up again. The programmer must take care not to accidentally disable the ISP Fuse as this will make the device unprogrammable through the serial interface. Only Parallel Programming may re-enable the fuse.

Figure 23-21. ISP/Serial Programming Device Connections

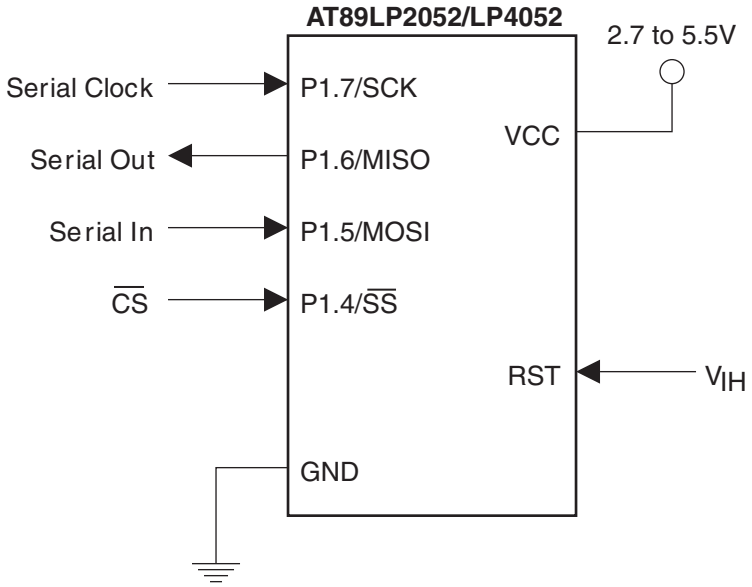

Note: SCK frequency should be less than 5 MHz.

23.5.1 Power-up Sequence

Execute this sequence to power-up the device **before** serial programming.

1. Apply power between VCC and GND pins.
2. Keep SCK (P1.7) and $\overline{SS}$ (P1.4) at “L”.
3. Wait 10 µs and bring RST and $\overline{SS}$ to “H”.
4. Wait at least 2 ms for internal Power-on Reset to time out.

Figure 23-22. Serial Programming Power-up Sequence

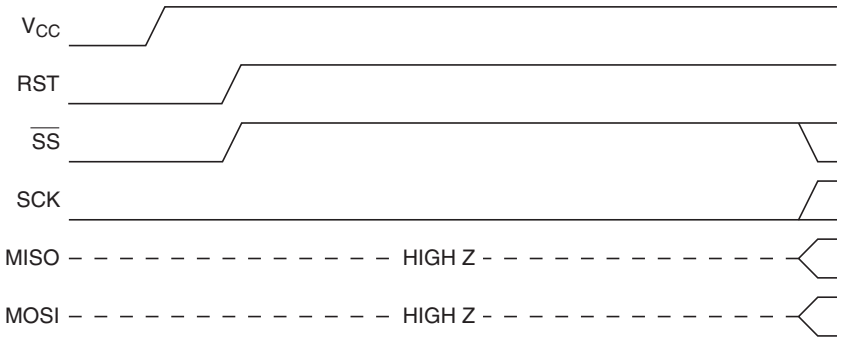

23.5.2 Power-down Sequence

Execute this sequence to power-down the device **after** serial programming.

1. Tri-state MOSI (P1.5).
2. Bring SCK (P1.7) to “L”.
3. Bring RST to “L”.
4. Bring $\overline{SS}$ (P1.4) to “L”
5. Power off Vcc.

Figure 23-23. Serial Programming Power-down Sequence

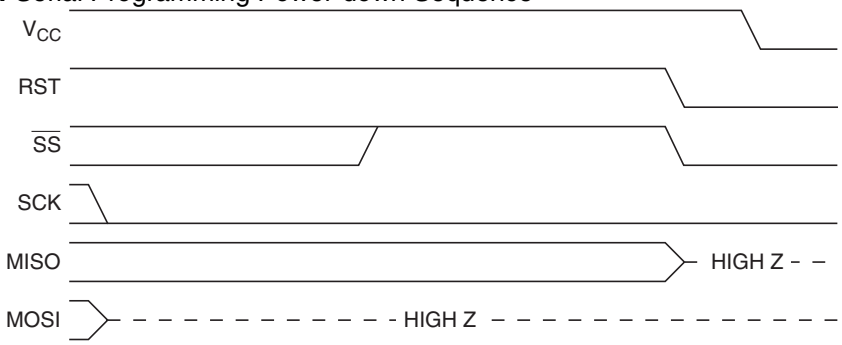

Note: The waveforms on this page are not to scale.

23.5.3 ISP Start Sequence

Execute this sequence to enter ISP when the device is **already** operational.

1. Bring $\overline{SS}$ (P1.4) to “H”.
2. Tri-state MISO (P1.6).
3. Bring RST to “H”.
4. Bring SCK (P1.7) to “L”.

Figure 23-24. In-System Programming (ISP) Start Sequence

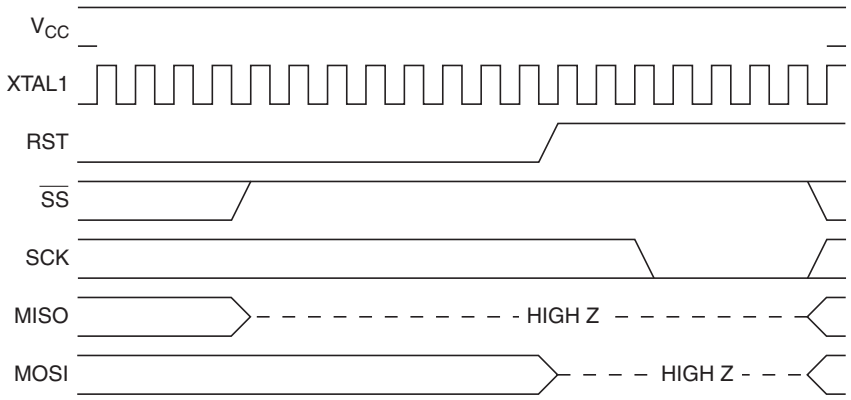

23.5.4 ISP Exit Sequence

Execute this sequence to exit ISP and resume execution.

1. Bring $\overline{SS}$ (P1.4) to “H”.
2. Tri-state MOSI (P1.5).
3. Tri-state SCK (P1.7).
4. Bring RST to “L”.
5. Tri-state $\overline{SS}$.

Figure 23-25. In-System Programming (ISP) Exit Sequence

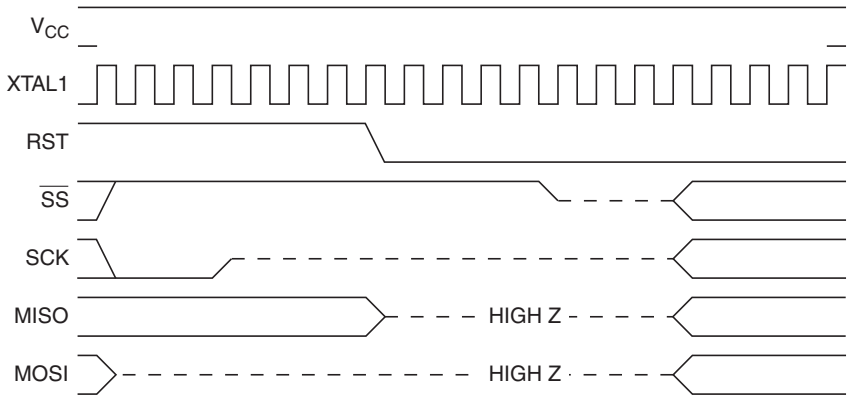

Note: The waveforms on this page are not to scale.

23.5.5 ISP Byte Sequence

The ISP byte sequence is shown in Figure 23-26.

- Data shifts in/out MSB first.
- MISO changes at **falling** edge of SCK.
- MOSI is sampled at **rising** edge of SCK.

Figure 23-26. ISP Byte Sequence

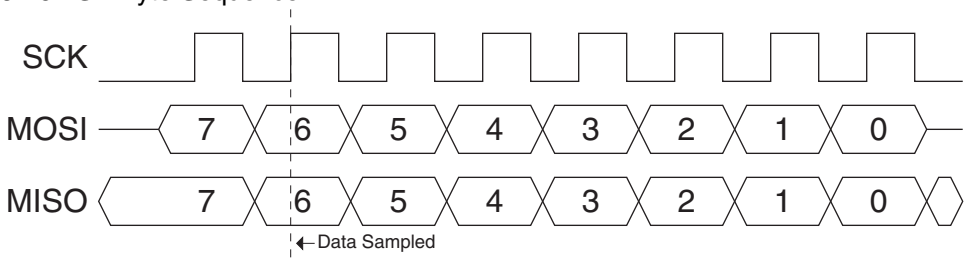

23.5.6 ISP Command Sequence

The ISP multi-byte command sequence is shown in Figure 23-27.

- $\overline{SS}$ should be brought low before the first byte in a command is sent and brought back high after the final byte in the command has been sent. The command is not complete until $\overline{SS}$ returns high.
- Command bytes are issued serially on MOSI (P1.5).
- Data bytes are output serially on MISO (P1.6).

Figure 23-27. ISP Command Sequence

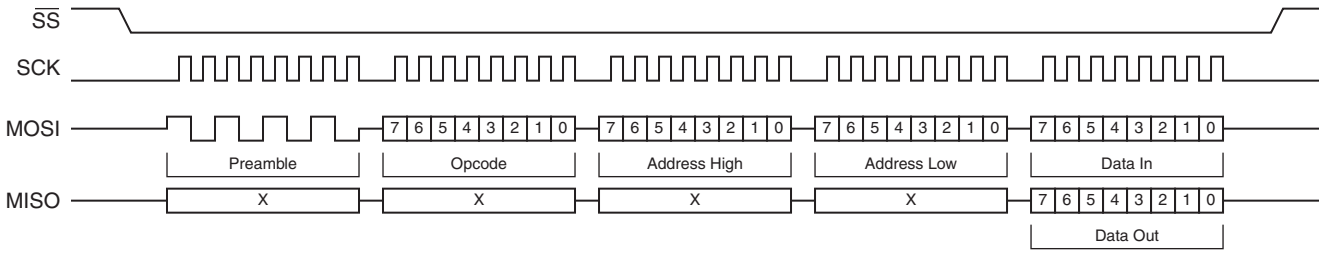

Table 23-4. Serial Programming Interface Parameters

Symbol	Parameter	Min	Max	Units
t_{SCK}	Serial Clock Cycle Time	200		ns
t_{SHSL}	Clock High Time	100		ns
t_{SLSH}	Clock Low Time	50		ns
t_{SR}	Rise Time		25	ns
t_{SF}	Fall Time		25	ns
t_{SIS}	Serial Input Setup Time	10		ns
t_{SIH}	Serial Input Hold Time	10		ns
t_{SOH}	Serial Output Hold Time		10	ns
t_{SOV}	Serial Output Valid Time		35	ns
t_{SOE}	Output Enable Time		10	ns
t_{SOX}	Output Disable Time		25	ns
t_{SSE}	$\overline{SS}$ Enable Lead Time	100		ns
t_{SSD}	$\overline{SS}$ Disable Lag Time	100		ns
t_{WRC}	Wire Cycle Time		4.5	ms
t_{ERS}	Erase Cycle Time		9	ms

Figure 23-28. Serial Programming Interface Timing

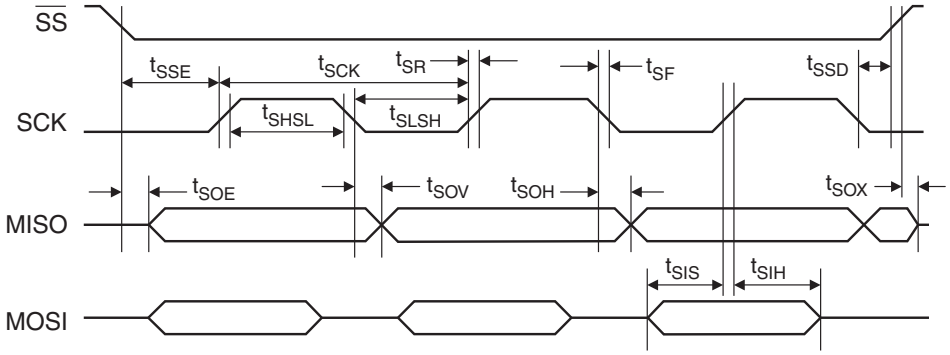

24. Electrical Characteristics

24.1 Absolute Maximum Ratings*

Operating Temperature	-40°C to +85°C
Storage Temperature	-65°C to +150°C
Voltage on Any Pin with Respect to Ground	-0.7V to +6.2V
Maximum Operating Voltage	5.5V
DC Output Current	15.0 mA

Note: Stresses beyond those listed under “Absolute Maximum Ratings” may cause permanent damage to the device. This is a stress rating only and functional operation of the device at these or any other conditions beyond those indicated in the operational sections of this specification is not implied. Exposure to absolute maximum rating conditions for extended periods may affect device reliability.

24.2 DC Characteristics

T_A = -40°C to 85°C, V_{CC} = 2.4V to 5.5V (unless otherwise noted)

Symbol	Parameter	Condition	Min	Max	Units
V_{IL}	Input Low-voltage	(Except RST)	-0.5	0.25 V_{CC}	V
V_{IL1}	Input Low-voltage	(RST)	-0.5	0.3 V_{CC}	V
V_{IH}	Input High-voltage	(Except RST)	0.65 V_{CC}	V_{CC} + 0.5	V
V_{IH1}	Input High-voltage	(RST)	0.6 V_{CC}	V_{CC} + 0.5	V
V_{OL}	Output Low-voltage (Ports 1, 3)[1]	I_{OL} = 10 mA, V_{CC} = 2.7V, T_A = 85°C		0.5	V
V_{OH}	Output High-voltage (Ports 1, 3) using Weak Pull-up[2]	I_{OH} = -80 µA, V_{CC} = 5V ±10%	2.4		V
		I_{OH} = -30 µA	0.75 V_{CC}		V
		I_{OH} = -12 µA	0.9 V_{CC}		V
V_{OH1}	Output High-voltage (Ports 1, 3) using Strong Pull-up[3]	I_{OH} = -10 mA, T_A = 85°C	0.9 V_{CC}		
I_{IL}	Logic 0 Input Current[2] (Ports 1, 3)	V_{IN} = 0.45V		-50	µA
I_{TL}	Logic 1 to 0 Transition Current[2] (Ports 1, 3)	V_{IN} = 2V, V_{CC} = 5V ±10%		-300	µA
I_{LI}	Input-Only Leakage Current	0 < V_{IN} < V_{CC}		±10	µA
V_{OS}	Comparator Input Offset Voltage	V_{CC} = 5V		20	mV
V_{CM}	Comparator Input Common Mode Voltage		0	V_{CC}	V
RRST	Reset Pull-down Resistor		50	150	kΩ
C_{IO}	Pin Capacitance	Test Freq. = 1 MHz, T_A = 25°C		10	pF
I_{CC}	Power Supply Current	Active Mode, 12 MHz, V_{CC} = 5.5V/3V		5.5/3.5	mA
		Idle Mode, 12 MHz, V_{CC} = 5.5V/3V		3/2	mA
	Power-down Mode[4]	V_{CC} = 5.5V		5	µA
		V_{CC} = 3V		2	µA

Notes:
1. Under steady state (non-transient) conditions, I_{OL} must be externally limited as follows:
   Maximum I_{OL} per port pin: 10 mA
   Maximum total I_{OL} for all output pins: 15 mA
   If I_{OL} exceeds the test condition, V_{OL} may exceed the related specification. Pins are not guaranteed to sink current greater than the listed test conditions.
2. Port in Quasi-Bidirectional Mode
3. Port in Push-Pull Output Mode
4. Minimum V_{CC} for Power-down is 2V.

24.3 Serial Peripheral Interface Timing

Table 24-1. SPI **Master** Characteristics

Symbol	Parameter	Min	Max	Units
t_{CLCL}	Oscillator Period	41.6		ns
t_{SCK}	Serial Clock Cycle Time	$4t_{CLCL}$		ns
t_{SHSL}	Clock High Time	$t_{SCK}/2$ - 25		ns
t_{SLSH}	Clock Low Time	$t_{SCK}/2$ - 25		ns
t_{SR}	Rise Time		25	ns
t_{SF}	Fall Time		25	ns
t_{SIS}	Serial Input Setup Time	10		ns
t_{SIH}	Serial Input Hold Time	10		ns
t_{SOH}	Serial Output Hold Time		10	ns
t_{SOV}	Serial Output Valid Time		35	ns

Table 24-2. SPI **Slave** Characteristics

Symbol	Parameter	Min	Max	Units
t_{CLCL}	Oscillator Period	41.6		ns
t_{SCK}	Serial Clock Cycle Time	$4t_{CLCL}$		ns
t_{SHSL}	Clock High Time	1.5 t_{CLCL} - 25		ns
t_{SLSH}	Clock Low Time	1.5 t_{CLCL} - 25		ns
t_{SR}	Rise Time		25	ns
t_{SF}	Fall Time		25	ns
t_{SIS}	Serial Input Setup Time	10		ns
t_{SIH}	Serial Input Hold Time	10		ns
t_{SOH}	Serial Output Hold Time		10	ns
t_{SOV}	Serial Output Valid Time		35	ns
t_{SOE}	Output Enable Time		10	ns
t_{SOX}	Output Disable Time		25	ns
t_{SSE}	Slave Enable Lead Time	10		ns
t_{SSD}	Slave Disable Lag Time	0		ns

Figure 24-1. SPI Master Timing (CPHA = 0)

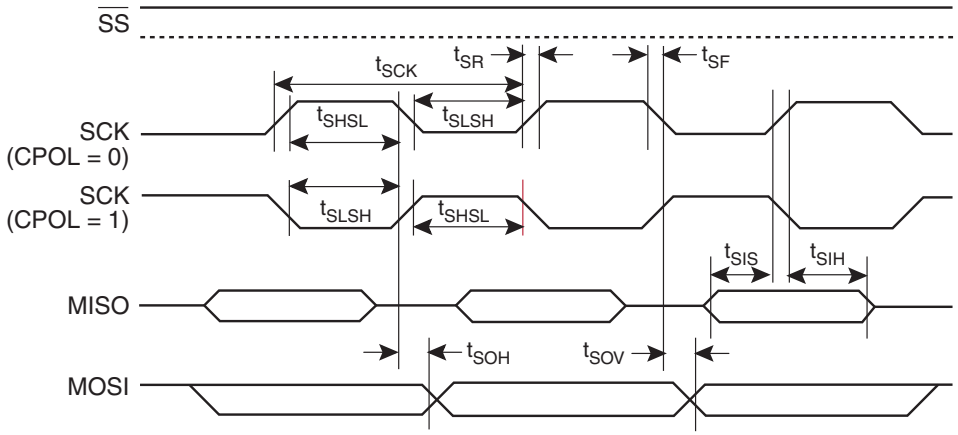

Figure 24-2. SPI Slave Timing (CPHA = 0)

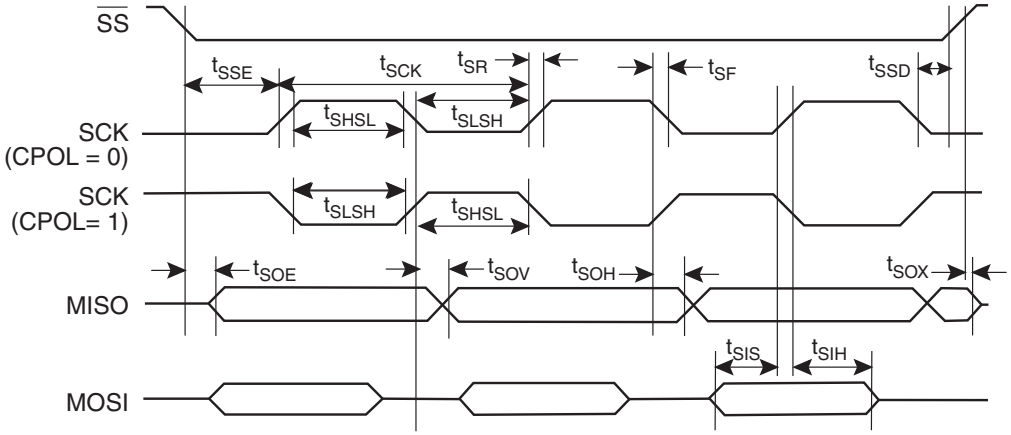

Figure 24-3. SPI Master Timing (CPHA = 1)

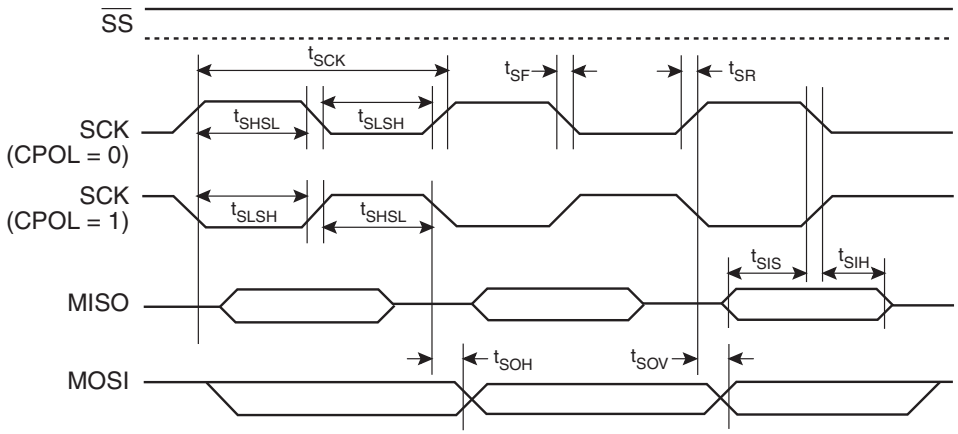

Figure 24-4. SPI Slave Timing (CPHA = 1)

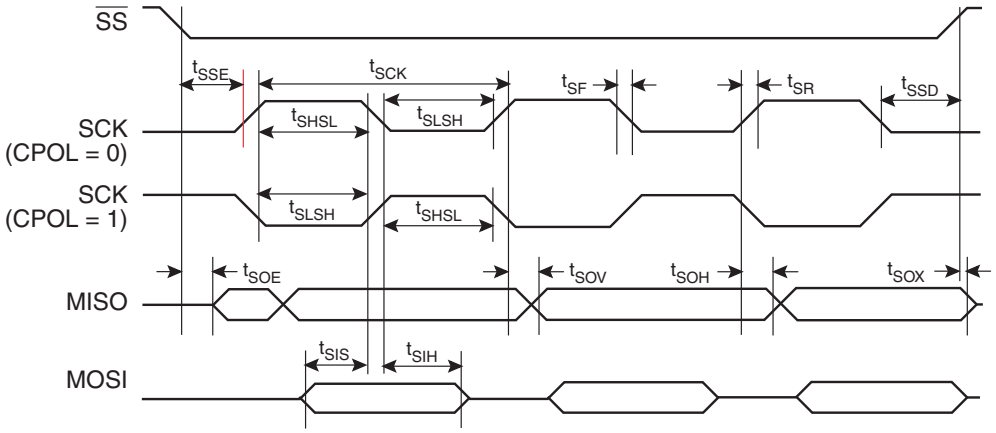

24.4 External Clock Drive

Figure 24-5. External Clock Drive Waveform

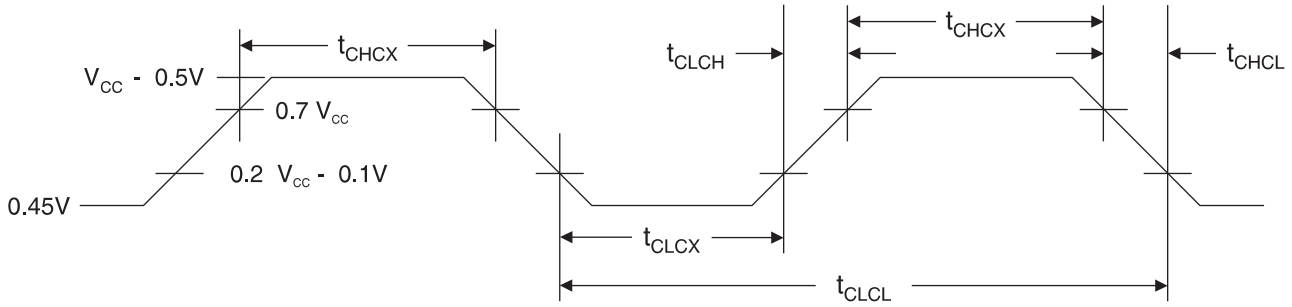

Table 24-3. External Clock Drive Parameters

Symbol	Parameter	V_{CC} = 2.4V to 5.5V		Units
		Min	Max	
$1/t_{CLCL}$	Oscillator Frequency	0	20	MHz
t_{CLCL}	Clock Period	50		ns
t_{CHCX}	High Time	12		ns
t_{CLCX}	Low Time	12		ns
t_{CLCH}	Rise Time		5	ns
t_{CHCL}	Fall Time		5	ns

24.5 Serial Port Timing: Shift Register Mode

Table 24-4. Serial Port Shift Register Timing Parameters [(1)]

Symbol	Parameter	Variable Oscillator		Units
		Min	Max	
t_{XLXL}	Serial Port Clock Cycle Time	$2t_{CLCL}$ -15		µs
t_{QVXH}	Output Data Setup to Clock Rising Edge	t_{CLCL} -15		ns
t_{XHQX}	Output Data Hold after Clock Rising Edge	t_{CLCL} -15		ns
t_{XHDX}	Input Data Hold after Clock Rising Edge	0		ns
t_{XHDV}	Input Data Valid to Clock Rising Edge	15		ns

Note: 1. The values in this table are valid for V_{CC} = 2.4V to 5.5V and Load Capacitance = 80 pF.

Figure 24-6. Shift Register Mode Timing Waveforms

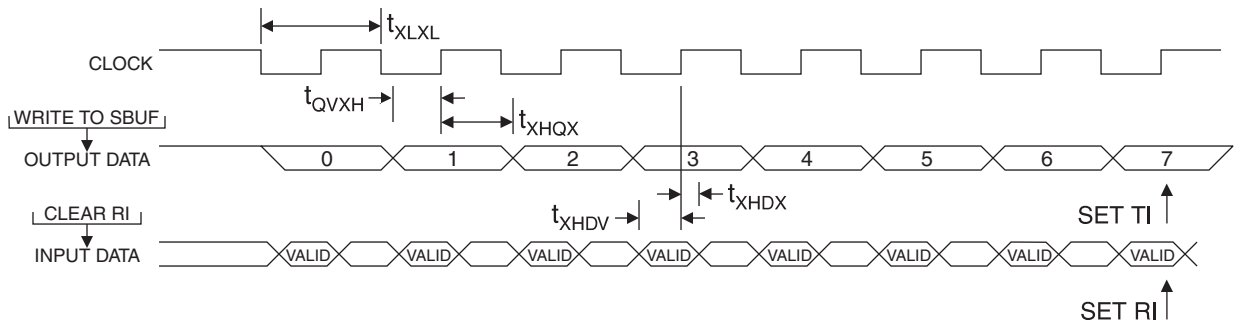

24.6 Test Conditions

24.6.1 AC Testing Input/Output Waveforms[(1)]

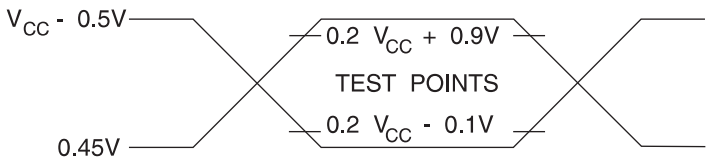

Note: 1. AC Inputs during testing are driven at V_{CC} - 0.5V for a logic “1” and 0.45V for a logic “0”. Timing measurements are made at V_{IH} min. for a logic “1” and V_{IL} max. for a logic “0”.

24.6.2 Float Waveforms[(1)]

Note: 1. For timing purposes, a port pin is no longer floating when a 100 mV change from load voltage occurs. A port pin begins to float when 100 mV change from the loaded V_{OH}/V_{OL} level occurs.

24.6.3 I_{CC} Test Condition, Active Mode, All Other Pins are Disconnected

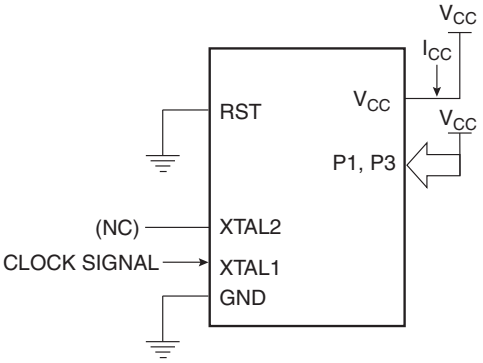

24.6.4 I_{CC} Test Condition, Idle Mode, All Other Pins are Disconnected

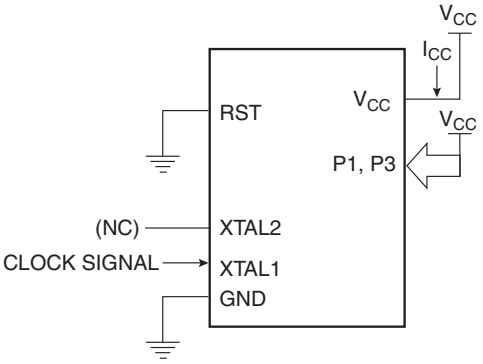

24.6.5 Clock Signal Waveform for I_{CC} Tests in Active and Idle Modes, $t_{CLCH} = t_{CHCL} = 5$ ns

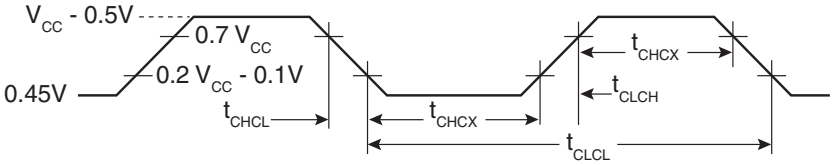

24.6.6 I_{CC} Test Condition, Power-down Mode, All Other Pins are Disconnected, V_{CC} = 2V to 5.5V

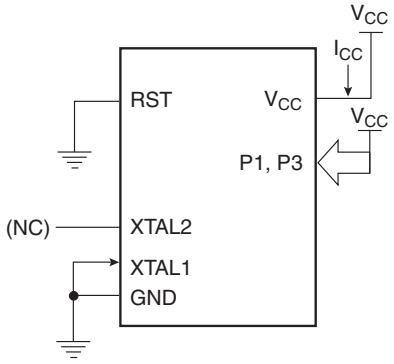

25. Ordering Information

25.1 Green Package Option (Pb/Halide-free)

Speed (MHz)	Power Supply	Ordering Code	Package	Operation Range
20	2.4V to 5.5V	AT89LP2052-20PU AT89LP2052-20SU AT89LP2052-20XU	20P3 20S2 20X	Industrial (-40· C to 85· C)
		AT89LP4052-20PU AT89LP4052-20SU AT89LP4052-20XU	20P3 20S2 20X	

Package Type	
20P3	20-lead, 0.300” Wide, Plastic Dual In-line Package (PDIP)
20S2	20-lead, 0.300” Wide, Plastic Gull Wing Small Outline (SOIC)
20X	20-lead, 4.4 mm Body Width, Plastic Thin Shrink Small Outline Package (TSSOP)

26. Packaging Information

26.1 20P3 – PDIP

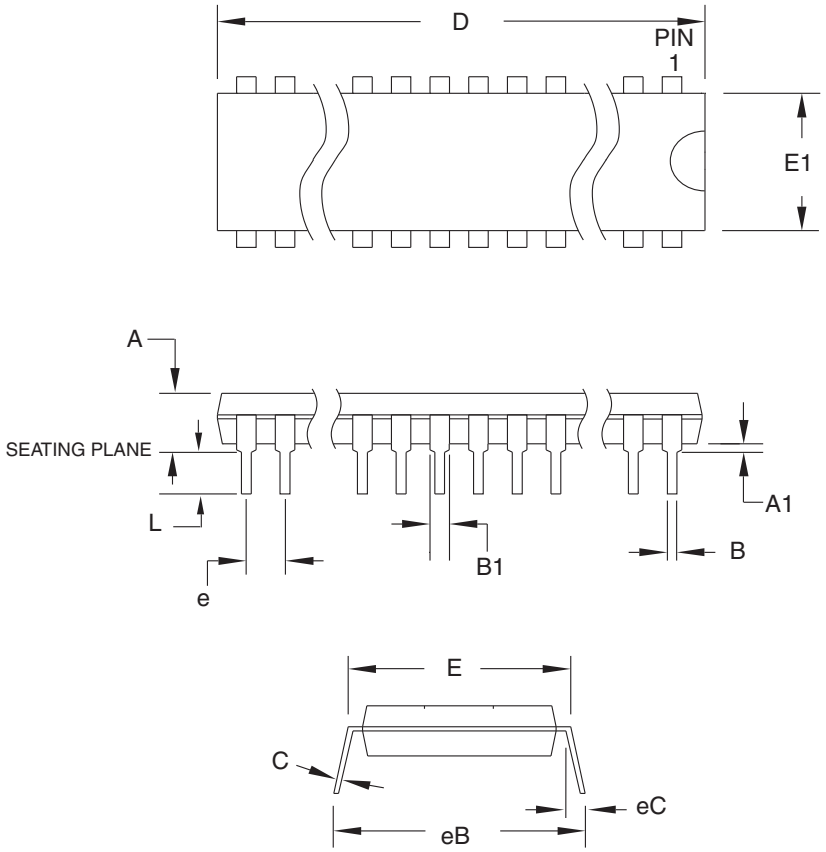

COMMON DIMENSIONS
(Unit of Measure = mm)

SYMBOL	MIN	NOM	MAX	NOTE
A	–	–	5.334	
A1	0.381	–	–	
D	24.892	–	26.924	Note 2
E	7.620	–	8.255	
E1	6.096	–	7.112	Note 2
B	0.356	–	0.559	
B1	1.270	–	1.551	
L	2.921	–	3.810	
C	0.203	–	0.356	
eB	–	–	10.922	
eC	0.000	–	1.524	
e	2.540 TYP			

Notes:
1. This package conforms to JEDEC reference MS-001, Variation AD.
2. Dimensions D and E1 do not include mold Flash or Protrusion. Mold Flash or Protrusion shall not exceed 0.25 mm (0.010").

1/23/04

2325 Orchard Parkway San Jose, CA 95131	TITLE **20P3**, 20-lead (0.300"/7.62 mm Wide) Plastic Dual Inline Package (PDIP)	DRAWING NO. 20P3	REV. D

26.2 20S2 – SOIC

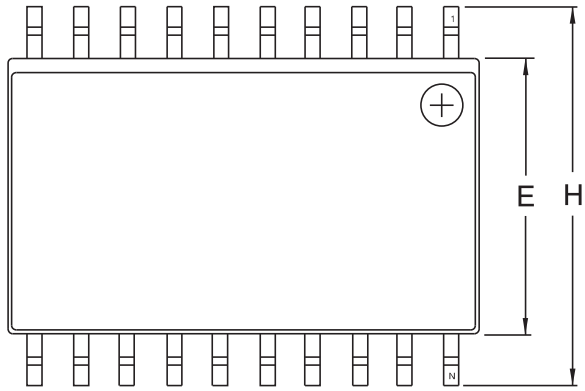

Top View

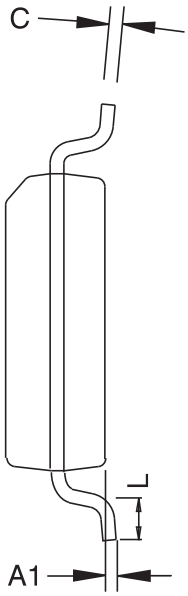

End View

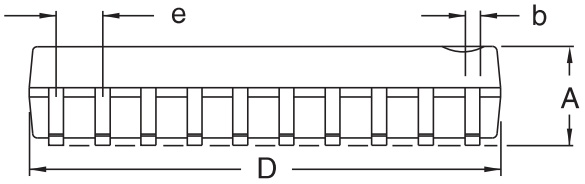

Side View

COMMON DIMENSIONS
(Unit of Measure – mm)

SYMBOL	MIN	NOM	MAX	NOTE
A	2.35		2.65	
A1	0.10		0.30	
b	0.33		0.51	4
C	0.23		0.32	
D	12.60		13.00	1
E	7.40		7.60	2
H	10.00		10.65	
L	0.40		1.27	3
e	1.27 BSC			

Notes.
1. This drawing is for general information only; refer to JEDEC Drawing MS-013, Variation AC for additional information.
2. Dimension 'D' does not include mold Flash, protrusions or gate burrs. Mold Flash, protrusions and gate burrs shall not exceed 0.15 mm (0.006') per side.
3. Dimension 'E' does not include inter-lead Flash or protrusion. Inter-lead Flash and protrusions shall not exceed 0.25 mm (0.010') per side.
4. 'L' is the length of the terminal for soldering to a substrate.
5. The lead width 'b', as measured 0.36 mm (0.014') or greater above the seating plane, shall not exceed a maximum value of 0.61 mm (0.024') per side.

11/6/06

2325 Orchard Parkway San Jose, CA 95131	**TITLE** **20S2**, 20-lead, 0.300' Wide Body, Plastic Gull Wing Small Outline Package (SOIC)	**DRAWING NO.** 20S2	**REV.** B

26.3 20X – TSSOP

Dimensions in Millimeters and (Inches).
Controlling dimension: Millimeters.
JEDEC Standard MO-153 AC

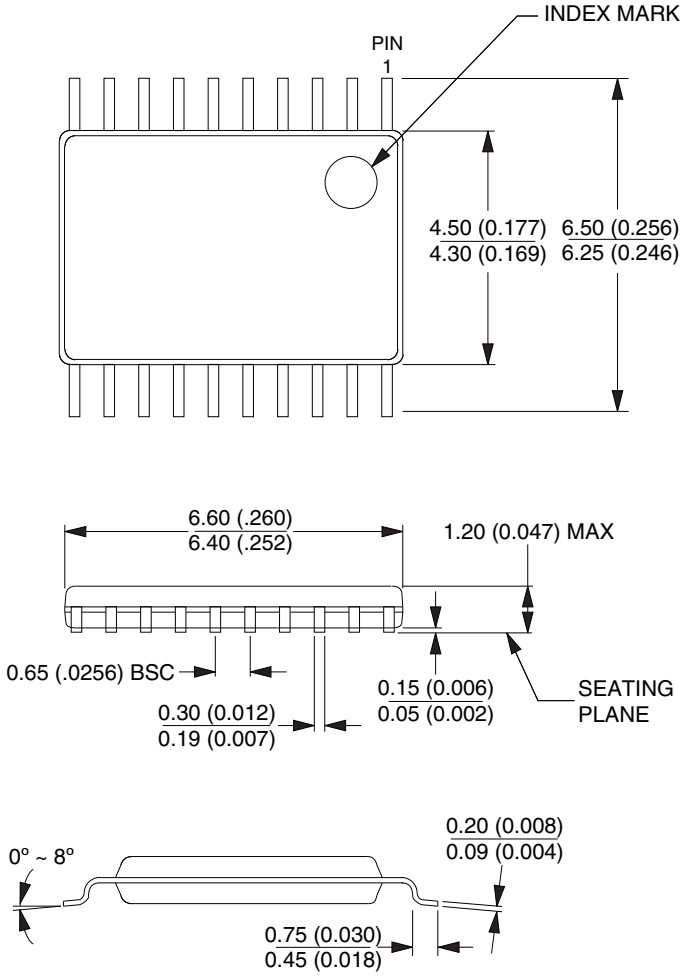

10/23/03

	TITLE	DRAWING NO.	REV.
2325 Orchard Parkway San Jose, CA 95131	**20X**, (Formerly 20T), 20-lead, 4.4 mm Body Width, Plastic Thin Shrink Small Outline Package (TSSOP)	20X	C

27. Revision History

Revision A – March 2005	• Initial Release
Revision B – June 2005	• Last paragraph in Section 13.2 on page 15 was inserted.
Revision C – August 2005	• In Table 16-3 on page 26, changed the SFR address for TCONB from 88H to 91H. • Changed the Maximum Bit Frequency from f/2 to f/4 in the "Serial Peripheral Interface" on page 42. • In the "SPI Block Diagram" on page 43, the 16-bit reference was deleted from Shift Register box. • In the "SPSR – SPI Status Register" on page 46, the Divider ratios were changed to the following: **÷4÷8÷32÷64** • Replaced CM3 with CM2 in Bit 2 of register ACSR (page 50) • In the "Programming Command Summary" on page 58, several changes were made in specific bit positions within the **Addr High**, **Addr Low** and **Data 0** columns.
Revision D – April 2006	• Added ROHS compliant device offerings.
Revision E – June 2006	• In pages 1, 82 and 83, the reference to V_{CC} = 2.7V were changed to 2.4V. On page 79 the maximum rating for the operating temperature was changed from +125· C to +85· C.
Revision F – June 2006	• In Table 6-1 on page 6, changed the SFR address of SPDR from 85H to 86H.
Revision G – April 2007	• In section 7.8 "Reset" on page 8 changed the polarity of the RST input signal requirement from **low** to **high**. • Added Section 11. "Oscillator Characteristics" on page 11.
Revision H – May 2007	• Changed TMOD to TCON (Table 16-1 on page 27). • Changed SPI = 1 and SPI = 0 to SPE = 1 and SPE = 0 (Table 19-1 on page 45).
Revision I – June 2008	• Removed Standard Packaging Offering.
Revision J – Oct. 2009	• Added R1 option to oscillator connection diagram Figure 11-1 on page 11. • Added related oscillator amplitude graphs Figures 11-3 and 11-5.

Table of Contents

1. Description 1

2. Pin Configuration 2

2.1 20-lead PDIP/SOIC/TSSOP 2

3. Pin Description 3

4. Block Diagram 4

5. Memory Organization 4

5.1 Program Memory 4

5.2 Data Memory 5

6. Special Function Registers 6

7. Comparison to Standard 8051 7

7.1 System Clock 7

7.2 Instruction Execution with Single-cycle Fetch 7

7.3 Interrupt Handling 7

7.4 Timer/Counters 7

7.5 Serial Port 7

7.6 Watchdog Timer 7

7.7 I/O Ports 8

7.8 Reset 8

8. Enhanced CPU 8

9. Restrictions on Certain Instructions 10

9.1 Branching Instructions 10

9.2 MOVX-related Instructions, Data Memory 10

10. System Clock 10

10.1 Crystal Oscillator 10

10.2 External Clock Source 10

10.3 System Clock Out 10

11. Oscillator Characteristics 11

12. Reset 14

12.1 Power-on Reset 14

12.2 Brown-out Reset 14

Table of Contents (Continued)

12.3 External Reset 14

12.4 Watchdog Reset 14

13. Power Saving Modes 14

13.1 Idle Mode 15

13.2 Power-down Mode 15

14. Interrupts 16

14.1 Interrupt Response Time 17

15. I/O Ports 20

15.1 Quasi-bidirectional Output 20

15.2 Input-only Mode 21

15.3 Open-drain Output 22

15.4 Push-pull Output 22

15.5 Port 1 Analog Functions 22

15.6 Port Read-Modify-Write 23

15.7 Port Alternate Functions 23

16. Enhanced Timer/Counters 24

16.1 Mode 0 24

16.2 Mode 1 25

16.3 Mode 2 26

16.4 Mode 3 26

16.5 Pulse Width Modulation 29

16.6 Timer/Counter Pin Configuration 30

17. External Interrupts 30

18. Serial Interface 31

18.1 Multiprocessor Communications 31

18.2 Baud Rates 33

18.3 More About Mode 0 34

18.4 More About Mode 1 36

18.5 More About Modes 2 and 3 38

18.6 Framing Error Detection 41

18.7 Automatic Address Recognition 41

Table of Contents (Continued)

19. Serial Peripheral Interface 42

19.1 Normal Mode 44

19.2 Enhanced Mode 44

19.3 Serial Clock Generator 47

19.4 SPI Pin Configuration 48

20. Analog Comparator 49

20.1 Comparator Interrupt with Debouncing 49

21. Programmable Watchdog Timer 51

22. Instruction Set Summary 52

23. Programming the Flash Memory 57

23.1 Programming Command Summary 58

23.2 Status Register 59

23.3 DATA Polling 59

23.4 Parallel Programming 59

23.5 In-System Programming (ISP) 73

24. Electrical Characteristics 78

24.1 Absolute Maximum Ratings* 78

24.2 DC Characteristics 79

24.3 Serial Peripheral Interface Timing 80

24.4 External Clock Drive 82

24.5 Serial Port Timing: Shift Register Mode 83

24.6 Test Conditions 83

25. Ordering Information 85

25.1 Green Package Option (Pb/Halide-free) 85

26. Packaging Information 86

26.1 20P3 – PDIP 86

26.2 20S2 – SOIC 87

26.3 20X – TSSOP 88

27. Revision History 89

Headquarters

Atmel Corporation
2325 Orchard Parkway
San Jose, CA 95131
USA
Tel: 1(408) 441-0311
Fax: 1(408) 487-2600

International

Atmel Asia
Room 1219
Chinachem Golden Plaza
77 Mody Road Tsimshatsui
East Kowloon
Hong Kong
Tel: (852) 2721-9778
Fax: (852) 2722-1369

Atmel Europe
Le Krebs
8, Rue Jean-Pierre Timbaud
BP 309
78054 Saint-Quentin-en-
Yvelines Cedex
France
Tel: (33) 1-30-60-70-00
Fax: (33) 1-30-60-71-11

Atmel Japan
9F, Tonetsu Shinkawa Bldg.
1-24-8 Shinkawa
Chuo-ku, Tokyo 104-0033
Japan
Tel: (81) 3-3523-3551
Fax: (81) 3-3523-7581

Product Contact

Web Site
www.atmel.com

Technical Support
mcu@atmel.com

Sales Contact
www.atmel.com/contacts

Literature Requests
www.atmel.com/literature

Disclaimer: The information in this document is provided in connection with Atmel products. No license, express or implied, by estoppel or otherwise, to any intellectual property right is granted by this document or in connection with the sale of Atmel products. **EXCEPT AS SET FORTH IN ATMEL'S TERMS AND CONDITIONS OF SALE LOCATED ON ATMEL'S WEB SITE, ATMEL ASSUMES NO LIABILITY WHATSOEVER AND DISCLAIMS ANY EXPRESS, IMPLIED OR STATUTORY WARRANTY RELATING TO ITS PRODUCTS INCLUDING, BUT NOT LIMITED TO, THE IMPLIED WARRANTY OF MERCHANTABILITY, FITNESS FOR A PARTICULAR PURPOSE, OR NON-INFRINGEMENT. IN NO EVENT SHALL ATMEL BE LIABLE FOR ANY DIRECT, INDIRECT, CONSEQUENTIAL, PUNITIVE, SPECIAL OR INCIDENTAL DAMAGES (INCLUDING, WITHOUT LIMITATION, DAMAGES FOR LOSS OF PROFITS, BUSINESS INTERRUPTION, OR LOSS OF INFORMATION) ARISING OUT OF THE USE OR INABILITY TO USE THIS DOCUMENT, EVEN IF ATMEL HAS BEEN ADVISED OF THE POSSIBILITY OF SUCH DAMAGES.** Atmel makes no representations or warranties with respect to the accuracy or completeness of the contents of this document and reserves the right to make changes to specifications and product descriptions at any time without notice. Atmel does not make any commitment to update the information contained herein. Unless specifically provided otherwise, Atmel products are not suitable for, and shall not be used in, automotive applications. Atmel's products are not intended, authorized, or warranted for use as components in applications intended to support or sustain life.

© 2009 Atmel Corporation. All rights reserved. Atmel®, logo and combinations thereof, and others are registered trademarks or trademarks of Atmel Corporation or its subsidiaries. Other terms and product names may be trademarks of others.

Mouser Electronics

Authorized Distributor

Click to View Pricing, Inventory, Delivery & Lifecycle Information:

Microchip:

AT89LP2052-20PU AT89LP2052-20SU AT89LP2052-20XU AT89LP4052-20PU AT89LP4052-20SU AT89LP4052-20XU