MCP3913

3V Six-Channel Analog Front End

Features

- Six Synchronous Sampling 24-Bit Resolution Delta-Sigma A/D Converters
- 94.5 dB SINAD, -107 dBc Total Harmonic Distortion (THD) (up to 35th Harmonic), 112 dBFS SFDR for Each Channel
- Enables 0.1% Typical Active Power Measurement Error Over a 10,000:1 Dynamic Range
- Advanced Security Features:
  - 16-Bit Cyclic Redundancy Check (CRC) Checksum on All Communications for Secure Data Transfers
  - 16-Bit CRC Checksum and Interrupt Alert for Register Map Configuration
  - Register Map Lock with 8-Bit Secure Key
- 2.7V-3.6V AV_{DD}, DV_{DD}
- Programmable Data Rate Up to 125 ksps:
  - 4 MHz Maximum Sampling Frequency
  - 16 MHz Maximum Master Clock
- Oversampling Ratio Up to 4096
- Ultra-Low Power Shutdown Mode with <10 µA
- -122 dB Crosstalk Between Channels
- Low Drift 1.2V Internal Voltage Reference: 9 ppm/°C
- Differential Voltage Reference Input Pins
- High-Gain PGA on Each Channel (up to 32 V/V)
- Phase Delay Compensation with 1 µs Time Resolution
- Separate Data Ready Pin for Easy Synchronization
- Individual 24-Bit Digital Offset and Gain Error Correction for Each Channel
- High-Speed 20 MHz SPI Interface with Mode 0,0 and 1,1 Compatibility
- Continuous Read/Write Modes for Minimum Communication Time with Dedicated 16/32-Bit Modes
- Available in a 40-Lead UQFN and 28-Lead SSOP Packages
- Extended Temperature Range: -40°C to +125°C

Description

The MCP3913 is a 3V six-channel Analog Front End (AFE), containing six synchronous sampling Delta-Sigma, Analog-to-Digital Converters (ADC), six PGAs, phase delay compensation block, low-drift internal voltage reference, Digital Offset and Gain Error Calibration registers and high-speed 20 MHz SPI-compatible serial interface.

The MCP3913 ADCs are fully configurable with features such as: 16/24-bit resolution, Oversampling Ratio (OSR) from 32 to 4096, gain from 1x to 32x, independent shutdown and Reset, dithering and auto-zeroing. The communication is largely simplified with 8-bit commands, including various continuous Read/Write modes and 16/24/32-bit data formats that can be accessed by the Direct Memory Access (DMA) of an 8, 16 or 32-bit MCU, and with the separate Data Ready pin that can directly be connected to an Interrupt Request (IRQ) input of an MCU.

The MCP3913 includes advanced security features to secure the communications and the configuration settings, such as a CRC-16 checksum on both serial data outputs and static register map configuration. It also includes a register map lock through an 8-bit secure key to stop unwanted `WRITE` commands from processing.

The MCP3913 is capable of interfacing with a variety of voltage and current sensors, including shunts, Current Transformers, Rogowski coils and Hall effect sensors.

Applications

- Polyphase Energy Meters
- Energy Metering and Power Measurement
- Automotive
- Portable Instrumentation
- Medical and Power Monitoring
- Audio/Voice Recognition

© 2013-2020 Microchip Technology Inc.

Package Type

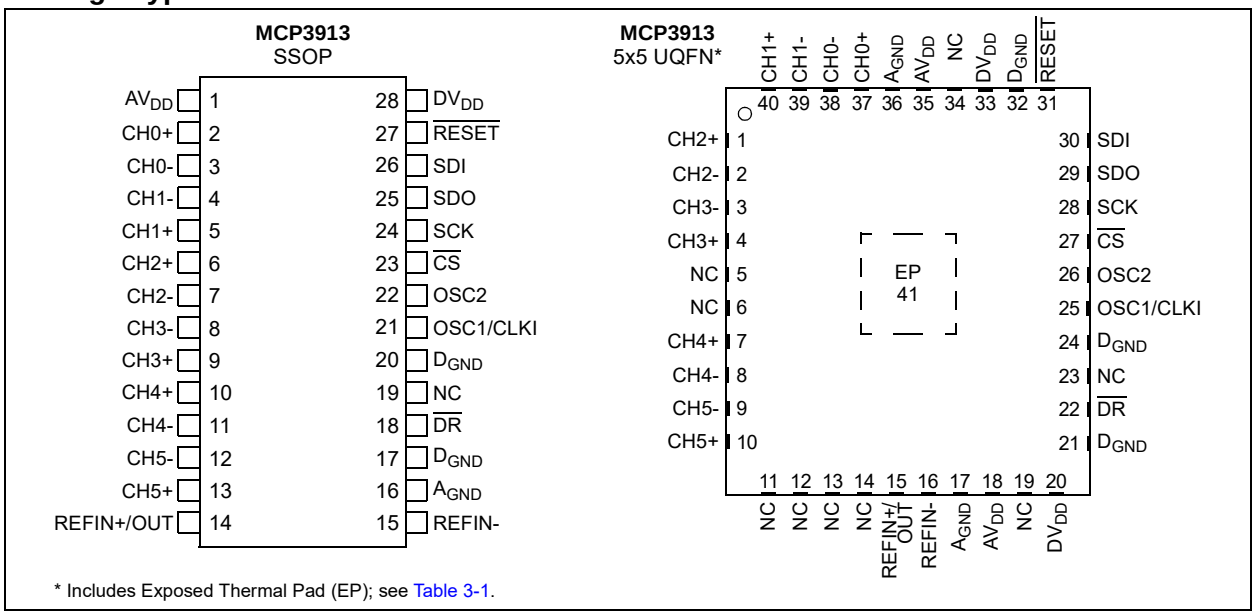

* Includes Exposed Thermal Pad (EP); see Table 3-1.

Functional Block Diagram

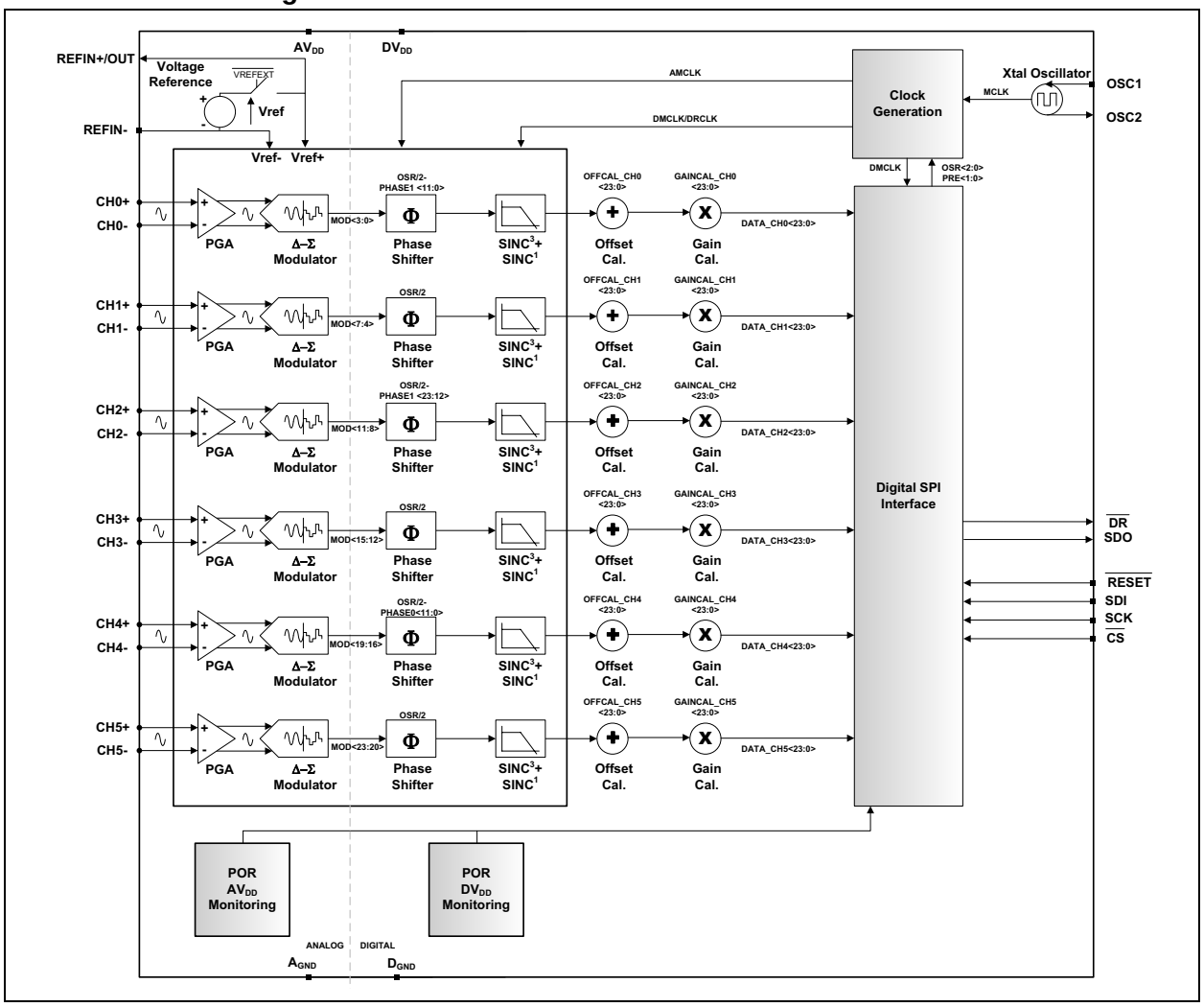

© 2013-2020 Microchip Technology Inc.

1.0 ELECTRICAL CHARACTERISTICS

Absolute Maximum Ratings†

V_{DD} ..... -0.3V to 4.0V
Digital inputs and outputs w.r.t. A_{GND} ..... -0.3V to 4.0V
Analog input w.r.t. A_{GND} ..... -2V to +2V
V_{REF} input w.r.t. A_{GND} ..... -0.6V to V_{DD} + 0.6V
Storage temperature ..... -65°C to +150°C
Ambient temp. with power applied ..... -65°C to +125°C
Soldering temperature of leads (10 seconds) ..... +300°C
ESD on the analog inputs (HBM,MM) ..... 1.5 kV, 300V
ESD on all other pins (HBM,MM) ..... 2 kV, 300V

† **Notice**: Stresses above those listed under "Absolute Maximum Ratings" may cause permanent damage to the device. This is a stress rating only and functional operation of the device at those or any other conditions, above those indicated in the operational listings of this specification, is not implied. Exposure to maximum rating conditions for extended periods may affect device reliability.

1.1 Electrical Specifications

TABLE 1-1: ANALOG SPECIFICATIONS

Electrical Specifications: Unless otherwise indicated, all parameters apply at AV_{DD} = DV_{DD} = 3V; MCLK = 4 MHz; PRE[1:0] = 00; OSR = 256; GAIN = 1; VREFEXT = 0, CLKEXT = 1, DITHER[1:0] = 11; BOOST[1:0] = 10, V_{CM} = 0V; T_A = -40°C to +125°C; V_{IN} = -0.5 dBFS @ 50/60 Hz on all channels.

Characteristic	Sym.	Min.	Typ.	Max.	Units	Conditions
ADC Performance						
Resolution (no missing codes)		24	—	—	bits	OSR = 256 or greater
Sampling Frequency	f_S(DMCLK)	—	1	4	MHz	For maximum condition, BOOST[1:0] = 11
Output Data Rate	f_D(DRCLK)	—	4	125	ksps	For maximum condition, BOOST[1:0] = 11, OSR = 32
Analog Input Absolute Voltage on CHn+/- Pins, n Between 0 and 5	CHn+/-	-1	—	+1	V	All analog input channels measured to A_{GND}
Analog Input Leakage Current	I_{IN}	—	±1	—	nA	RESET[5:0] = 111111, MCLK running continuously
Differential Input Voltage Range	(CH_{n+} – CH_{n-})	-600/GAIN	—	+600/GAIN	mV	V_{REF} = 1.2V, proportional to V_{REF}
Offset Error	V_{OS}	-2	0.2	2	mV	**Note 5**
Offset Error Drift		—	0.5	—	µV/°C	

Note 1: Dynamic performance specified at -0.5 dB below the maximum differential input value, V_{IN} = 1.2 V_{PP} = 424 mV_{RMS} @ 50/60 Hz, V_{REF} = 1.2V. See **Section 4.0 "Terminology and Formulas"** for definition. This parameter is established by characterization and not 100% tested.

2: For these operating currents, the following Configuration bit settings apply: SHUTDOWN[5:0] = 000000, RESET[5:0] = 000000, VREFEXT = 0, CLKEXT = 0.

3: For these operating currents, the following Configuration bit settings apply: SHUTDOWN[5:0] = 111111, VREFEXT = 1, CLKEXT = 1.

4: Measured on one channel versus all others channels. The average of crosstalk performance over all channels (see Figure 2-32 for individual channel performance).

5: Applies to all gains. Offset and gain errors depend on the PGA gain setting; see **Section 2.0 "Typical Performance Curves"** for typical performance.

6: Outside of this range, ADC accuracy is not specified. An extended input range of ±2V can be applied continuously to the part with no damage.

7: For proper operation and for optimizing ADC accuracy, AMCLK should be limited to the maximum frequency defined in Table 5-2, as a function of the BOOST and PGA settings chosen. MCLK can take larger values as long as the prescaler settings (PRE[1:0]) limit AMCLK = MCLK/PRESCALE in the defined range in Table 5-2.

TABLE 1-1: ANALOG SPECIFICATIONS (CONTINUED)

Electrical Specifications: Unless otherwise indicated, all parameters apply at AV_{DD} = DV_{DD} = 3V; MCLK = 4 MHz; PRE[1:0] = 00; OSR = 256; GAIN = 1; VREFEXT = 0, CLKEXT = 1, DITHER[1:0] = 11; BOOST[1:0] = 10, V_{CM} = 0V; T_A = -40°C to +125°C; V_{IN} = -0.5 dBFS @ 50/60 Hz on all channels.

Characteristic	Sym.	Min.	Typ.	Max.	Units	Conditions
Gain Error	GE	-6	—	+6	%	**Note 5**
Gain Error Drift		—	1	—	ppm/°C	
Integral Nonlinearity	INL	—	5	—	ppm	
Measurement Error	ME	—	0.1	—	%	Measured with a 10,000:1 dynamic range (from 600 mV_{Peak} to 60 μV_{Peak}), AV_{DD} = DV_{DD} = 3V, measurement points averaging time: 20 seconds, measured on each channel pair (CH0/1, CH2/3, CH4/5)
Differential Input Impedance	Z_{IN}	232	—	—	kΩ	G = 1, proportional to 1/AMCLK
		142	—	—	kΩ	G = 2, proportional to 1/AMCLK
		72	—	—	kΩ	G = 4, proportional to 1/AMCLK
		38	—	—	kΩ	G = 8, proportional to 1/AMCLK
		36	—	—	kΩ	G = 16, proportional to 1/AMCLK
		33	—	—	kΩ	G = 32, proportional to 1/AMCLK
Signal-to-Noise and Distortion Ratio **(Note 1)**	SINAD	92	94.5	—	dB	
Total Harmonic Distortion **(Note 1)**	THD	—	-107	-103	dBc	Includes the first 35 harmonics
Signal-to-Noise Ratio **(Note 1)**	SNR	92	95	—	dB	
Spurious-Free Dynamic Range **(Note 1)**	SFDR	—	112	—	dBFS	
Crosstalk (50, 60 Hz)	CTALK	—	-122	—	dB	**Note 4**
AC Power Supply Rejection	AC PSRR	—	-73	—	dB	AV_{DD} = DV_{DD} = 3V + 0.6V_{PP}, 50/60 Hz, 100/120 Hz
DC Power Supply Rejection	DC PSRR	—	-73	—	dB	AV_{DD} = DV_{DD} = 2.7V to 3.6V
DC Common-mode Rejection	DC CMRR	—	-100	—	dB	V_{CM} from -1V to +1V

Note 1: Dynamic performance specified at -0.5 dB below the maximum differential input value, V_{IN} = 1.2 V_{PP} = 424 mV_{RMS} @ 50/60 Hz, V_{REF} = 1.2V. See **Section 4.0 "Terminology and Formulas"** for definition. This parameter is established by characterization and not 100% tested.

2: For these operating currents, the following Configuration bit settings apply: SHUTDOWN[5:0] = 000000, RESET[5:0] = 000000, VREFEXT = 0, CLKEXT = 0.

3: For these operating currents, the following Configuration bit settings apply: SHUTDOWN[5:0] = 111111, VREFEXT = 1, CLKEXT = 1.

4: Measured on one channel versus all others channels. The average of crosstalk performance over all channels (see Figure 2-32 for individual channel performance).

5: Applies to all gains. Offset and gain errors depend on the PGA gain setting; see **Section 2.0 "Typical Performance Curves"** for typical performance.

6: Outside of this range, ADC accuracy is not specified. An extended input range of ±2V can be applied continuously to the part with no damage.

7: For proper operation and for optimizing ADC accuracy, AMCLK should be limited to the maximum frequency defined in Table 5-2, as a function of the BOOST and PGA settings chosen. MCLK can take larger values as long as the prescaler settings (PRE[1:0]) limit AMCLK = MCLK/PRESCALE in the defined range in Table 5-2.

© 2013-2020 Microchip Technology Inc.

TABLE 1-1: ANALOG SPECIFICATIONS (CONTINUED)

Electrical Specifications: Unless otherwise indicated, all parameters apply at AV_{DD} = DV_{DD} = 3V; MCLK = 4 MHz; PRE[1:0] = 00; OSR = 256; GAIN = 1; VREFEXT = 0, CLKEXT = 1, DITHER[1:0] = 11; BOOST[1:0] = 10, V_{CM} = 0V; T_A = -40°C to +125°C; V_{IN} = -0.5 dBFS @ 50/60 Hz on all channels.

Characteristic	Sym.	Min.	Typ.	Max.	Units	Conditions
Internal Voltage Reference						
Tolerance	V_{REF}	1.176	1.2	1.224	V	VREFEXT = 0, T_A = +25°C only
Temperature Coefficient	TCV_{REF}	—	9	—	ppm/°C	T_A = -40°C to +125°C, VREFEXT = 0, VREFCAL[7:0] = 0x50
Output Impedance	$ZOUTV_{REF}$	—	0.6	—	kΩ	VREFEXT = 0
Internal Voltage Reference Operating Current	$AI_{DD}V_{REF}$	—	54	—	µA	VREFEXT = 0, SHUTDOWN[5:0] = 111111
Voltage Reference Input						
Input Capacitance		—	—	10	pF	
Differential Input Voltage Range (V_{REF}+ – V_{REF}-)	V_{REF}	1.1	—	1.3	V	VREFEXT = 1
Absolute Voltage on REFIN+ Pin	V_{REF}+	V_{REF}- + 1.1	—	V_{REF}- + 1.3	V	VREFEXT = 1
Absolute Voltage on REFIN- Pin	V_{REF}-	-0.1	—	+0.1	V	REFIN- should be connected to A_{GND} when VREFEXT = 0
Master Clock Input						
Master Clock Input Frequency Range	f_{MCLK}	—	—	20	MHz	CLKEXT = 1 **(Note 7)**
Crystal Oscillator Operating Frequency Range	f_{XTAL}	1	—	20	MHz	CLKEXT = 0 **(Note 7)**
Analog Master Clock	AMCLK	—	—	16	MHz	**Note 7**
Crystal Oscillator Operating Current	DIDDXTAL	—	80	—	µA	CLKEXT = 0
Power Supply						
Operating Voltage, Analog	AV_{DD}	2.7	—	3.6	V	
Operating Voltage, Digital	DV_{DD}	2.7	—	3.6	V	

Note 1: Dynamic performance specified at -0.5 dB below the maximum differential input value, V_{IN} = 1.2 V_{PP} = 424 mV_{RMS} @ 50/60 Hz, V_{REF} = 1.2V. See **Section 4.0 "Terminology and Formulas"** for definition. This parameter is established by characterization and not 100% tested.

2: For these operating currents, the following Configuration bit settings apply: SHUTDOWN[5:0] = 000000, RESET[5:0] = 000000, VREFEXT = 0, CLKEXT = 0.

3: For these operating currents, the following Configuration bit settings apply: SHUTDOWN[5:0] = 111111, VREFEXT = 1, CLKEXT = 1.

4: Measured on one channel versus all others channels. The average of crosstalk performance over all channels (see Figure 2-32 for individual channel performance).

5: Applies to all gains. Offset and gain errors depend on the PGA gain setting; see **Section 2.0 "Typical Performance Curves"** for typical performance.

6: Outside of this range, ADC accuracy is not specified. An extended input range of ±2V can be applied continuously to the part with no damage.

7: For proper operation and for optimizing ADC accuracy, AMCLK should be limited to the maximum frequency defined in Table 5-2, as a function of the BOOST and PGA settings chosen. MCLK can take larger values as long as the prescaler settings (PRE[1:0]) limit AMCLK = MCLK/PRESCALE in the defined range in Table 5-2.

TABLE 1-1: ANALOG SPECIFICATIONS (CONTINUED)

Electrical Specifications: Unless otherwise indicated, all parameters apply at AV_{DD} = DV_{DD} = 3V; MCLK = 4 MHz; PRE[1:0] = 00; OSR = 256; GAIN = 1; VREFEXT = 0, CLKEXT = 1, DITHER[1:0] = 11; BOOST[1:0] = 10, V_{CM} = 0V; T_A = -40°C to +125°C; V_{IN} = -0.5 dBFS @ 50/60 Hz on all channels.

Characteristic	Sym.	Min.	Typ.	Max.	Units	Conditions
Operating Current, Analog (**Note 2**)	$I_{DD,A}$	—	4.5	6	mA	BOOST[1:0] = 00
		—	5.4	8	mA	BOOST[1:0] = 01
		—	7.4	10	mA	BOOST[1:0] = 10
		—	12.9	17.5	mA	BOOST[1:0] = 11
Operating Current, Digital	$I_{DD,D}$	—	0.5	1	mA	MCLK = 4 MHz, proportional to MCLK (**Note 2**)
		—	1.5	—	mA	MCLK = 16 MHz, proportional to MCLK (**Note 2**)
Shutdown Current, Analog	$I_{DDS,A}$	—	0.01	2	µA	AV_{DD} pin only (**Note 3**)
Shutdown Current, Digital	$I_{DDS,D}$	—	0.01	7	µA	DV_{DD} pin only (**Note 3**)
Pull-Down Current on OSC2 Pin (External Clock mode only)	I_{OSC2}	—	35	—	µA	CLKEXT = 1

Note 1: Dynamic performance specified at -0.5 dB below the maximum differential input value, V_{IN} = 1.2 V_{PP} = 424 mV_{RMS} @ 50/60 Hz, V_{REF} = 1.2V. See **Section 4.0 "Terminology and Formulas"** for definition. This parameter is established by characterization and not 100% tested.

2: For these operating currents, the following Configuration bit settings apply: SHUTDOWN[5:0] = 000000, RESET[5:0] = 000000, VREFEXT = 0, CLKEXT = 0.

3: For these operating currents, the following Configuration bit settings apply: SHUTDOWN[5:0] = 111111, VREFEXT = 1, CLKEXT = 1.

4: Measured on one channel versus all others channels. The average of crosstalk performance over all channels (see Figure 2-32 for individual channel performance).

5: Applies to all gains. Offset and gain errors depend on the PGA gain setting; see **Section 2.0 "Typical Performance Curves"** for typical performance.

6: Outside of this range, ADC accuracy is not specified. An extended input range of ±2V can be applied continuously to the part with no damage.

7: For proper operation and for optimizing ADC accuracy, AMCLK should be limited to the maximum frequency defined in Table 5-2, as a function of the BOOST and PGA settings chosen. MCLK can take larger values as long as the prescaler settings (PRE[1:0]) limit AMCLK = MCLK/PRESCALE in the defined range in Table 5-2.

© 2013-2020 Microchip Technology Inc.

1.2 Serial Interface Characteristics

TABLE 1-2: SERIAL DC CHARACTERISTICS

Electrical Specifications: Unless otherwise indicated, all parameters apply at DV_{DD} = 2.7 to 3.6 V; T_A = -40°C to +125°C; C_{LOAD} = 30 pF; applies to all digital I/Os.

Characteristic	Sym.	Min.	Typ.	Max.	Units	Conditions
High-Level Input Voltage	V_{IH}	0.7 DV_{DD}	—	—	V	Schmitt triggered
Low-Level Input Voltage	V_{IL}	—	—	0.3 DV_{DD}	V	Schmitt triggered
Input Leakage Current	I_{LI}	—	—	±1	µA	$\overline{CS}$ = DV_{DD}, V_{IN} = D_{GND} to DV_{DD}
Output Leakage Current	I_{LO}	—	—	±1	µA	$\overline{CS}$ = DV_{DD}, V_{OUT} = D_{GND} or DV_{DD}
Hysteresis of Schmitt Trigger Inputs	V_{HYS}	—	500	—	mV	DV_{DD} = 3.3V only **(Note 2)**
Low-Level Output Voltage	V_{OL}	—	—	0.2 DV_{DD}	V	I_{OL} = +1.7 mA
High-Level Output Voltage	V_{OH}	0.8 DV_{DD}	—	—	V	I_{OH} = -1.7 mA
Internal Capacitance (all inputs and outputs)	C_{INT}	—	—	7	pF	T_A = +25°C, SCK = 1.0 MHz, DV_{DD} =3.3V **(Note 1)**

Note 1: This parameter is periodically sampled and not 100% tested.

2: This parameter is established by characterization and not production tested.

TABLE 1-3: SERIAL AC CHARACTERISTICS

Electrical Specifications: Unless otherwise indicated, all parameters apply at DV_{DD} = 2.7 to 3.6 V; T_A = -40°C to +125°C; GAIN = 1; C_{LOAD} = 30 pF.

Characteristic	Sym.	Min.	Typ.	Max.	Units	Conditions
Serial Clock Frequency	f_{SCK}	—	—	20	MHz	
$\overline{CS}$ Setup Time	t_{CSS}	25	—	—	ns	
$\overline{CS}$ Hold Time	t_{CSH}	50	—	—	ns	
$\overline{CS}$ Disable Time	t_{CSD}	50	—	—	ns	
Data Setup Time	t_{SU}	5	—	—	ns	
Data Hold Time	t_{HD}	10	—	—	ns	
Serial Clock High Time	t_{HI}	20	—	—	ns	
Serial Clock Low Time	t_{LO}	20	—	—	ns	
Serial Clock Delay Time	t_{CLD}	50	—	—	ns	
Serial Clock Enable Time	t_{CLE}	50	—	—	ns	
Output Valid from SCK Low	t_{DO}	—	—	25	ns	
Output Hold Time	t_{HO}	0	—	—	ns	**Note 1**
Output Disable Time	t_{DIS}	—	—	25	ns	**Note 1**
Reset Pulse Width ($\overline{RESET}$)	t_{MCLR}	100	—	—	ns	
Data Transfer Time to $\overline{DR}$ (Data Ready)	t_{DODR}	—	—	25	ns	**Note 2**
Modulator Mode Entry to Modulator Data Present	t_{MODSU}	—	—	100	ns	
Data Ready Pulse Low Time	t_{DRP}	—	1/(2 x DMCLK)	—	µs	

Note 1: This parameter is periodically sampled and not 100% tested.

2: This parameter is established by characterization and not production tested.

TABLE 1-4: TEMPERATURE SPECIFICATIONS

Electrical Specifications: Unless otherwise indicated, all parameters apply at AV_{DD} = 2.7 to 3.6V; DV_{DD} = 2.7 to 3.6V.						
Parameters	**Sym.**	**Min.**	**Typ.**	**Max.**	**Units.**	**Conditions**
Temperature Ranges						
Operating Temperature Range	T_A	-40	—	+125	°C	**Note 1**
Storage Temperature Range	T_A	-65	—	+150	°C	
Thermal Package Resistances						
Thermal Resistance, 28-Lead SSOP	θ_{JA}	—	80	—	°C/W	
Thermal Resistance, 40-Lead UQFN	θ_{JA}	—	41	—	°C/W	

Note 1: The internal junction temperature (T_J) must not exceed the absolute maximum specification of +150°C.

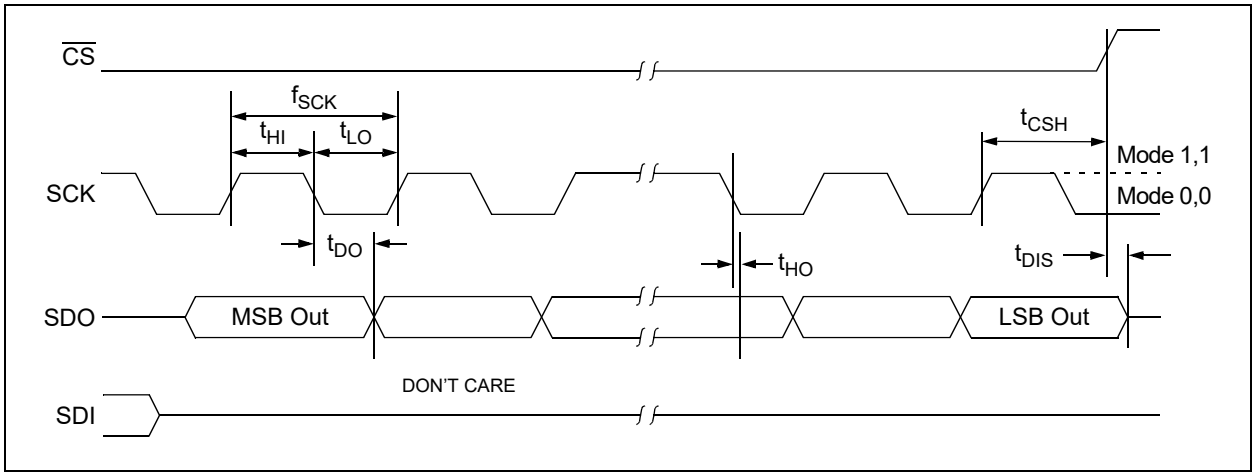

FIGURE 1-1: *Serial Output Timing Diagram.*

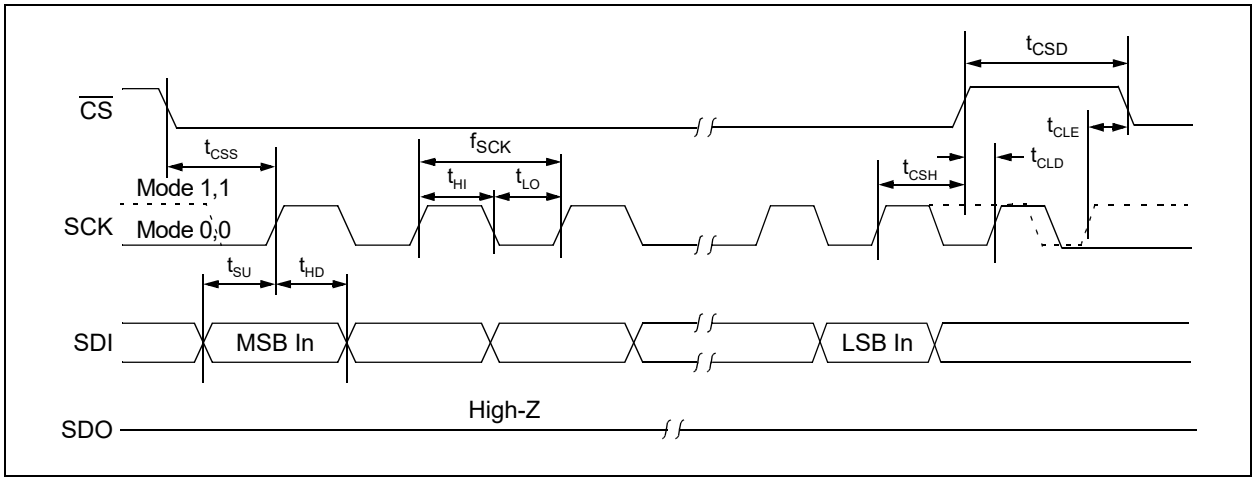

FIGURE 1-2: *Serial Input Timing Diagram.*

© 2013-2020 Microchip Technology Inc.

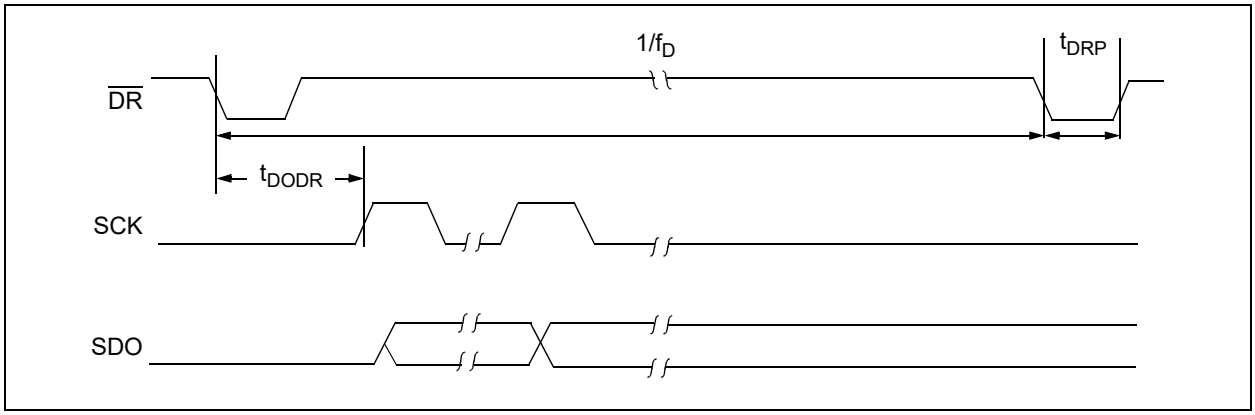

FIGURE 1-3: *Data Ready Pulse/Sampling Timing Diagram.*

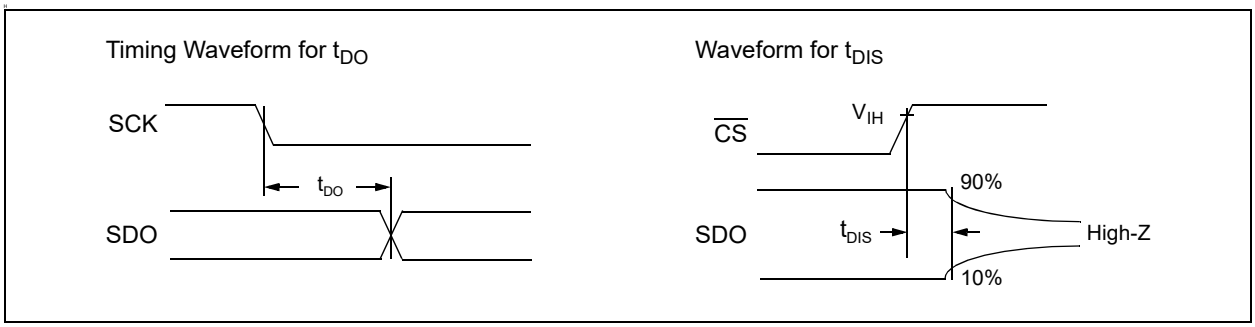

FIGURE 1-4: *Timing Waveforms.*

2.0 TYPICAL PERFORMANCE CURVES

Note: The graphs and tables provided following this note are a statistical summary based on a limited number of samples and are provided for informational purposes only. The performance characteristics listed herein are not tested or guaranteed. In some graphs or tables, the data presented may be outside the specified operating range (e.g., outside specified power supply range) and therefore outside the warranted range.

Note: Unless otherwise indicated, AV_{DD} = 3V; DV_{DD} = 3V; T_A = +25°C; MCLK = 4 MHz; PRESCALE = 1; OSR = 256; GAIN = 1; Dithering = Maximum; V_{IN} = -0.5 dBFS @ 60 Hz on all channels; VREFEXT = 0; CLKEXT = 1; BOOST[1:0] = 10.

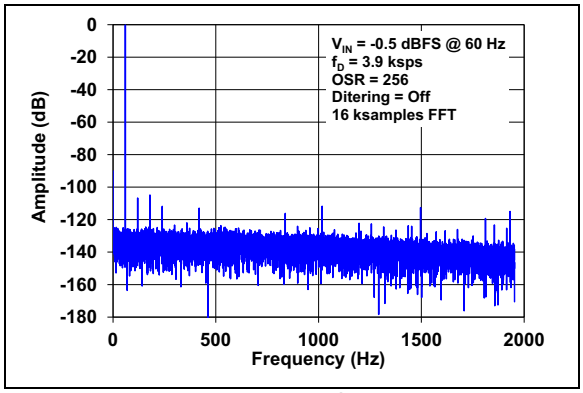

FIGURE 2-1: *Spectral Response.*

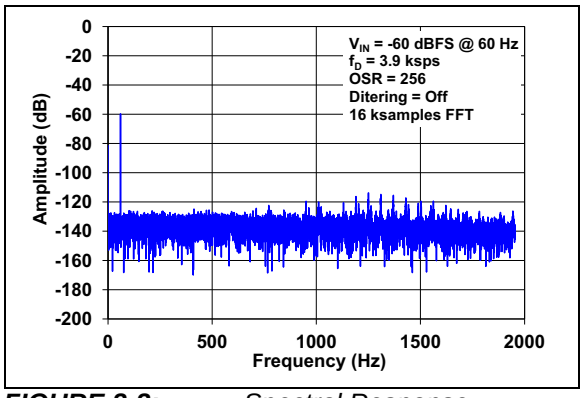

FIGURE 2-2: *Spectral Response.*

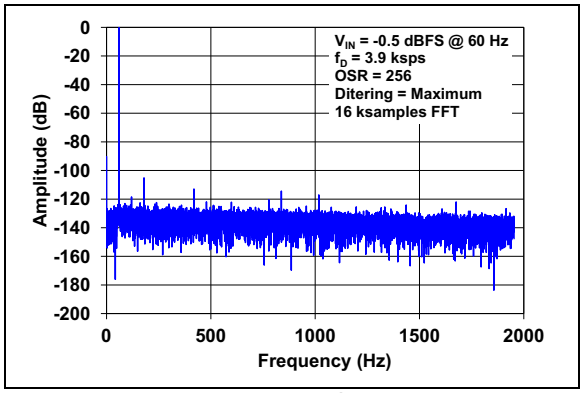

FIGURE 2-3: *Spectral Response.*

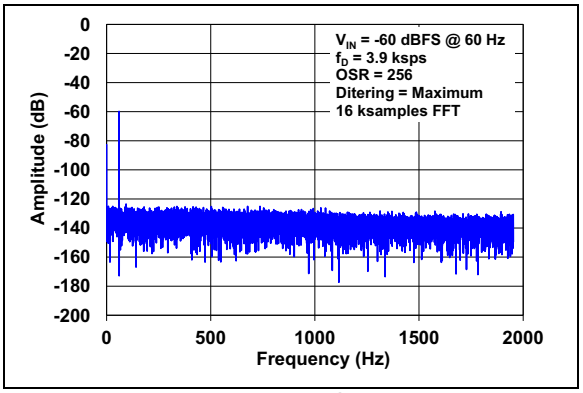

FIGURE 2-4: *Spectral Response.*

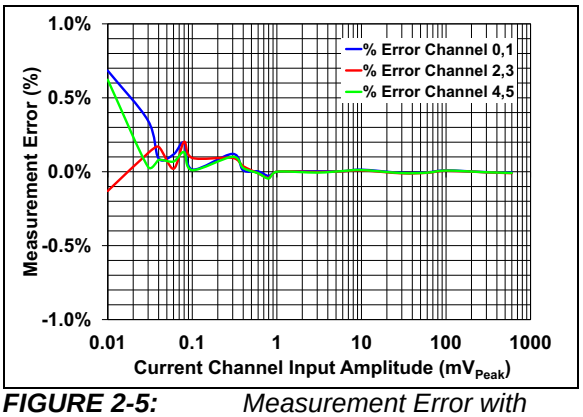

FIGURE 2-5: *Measurement Error with 1-Point Calibration.*

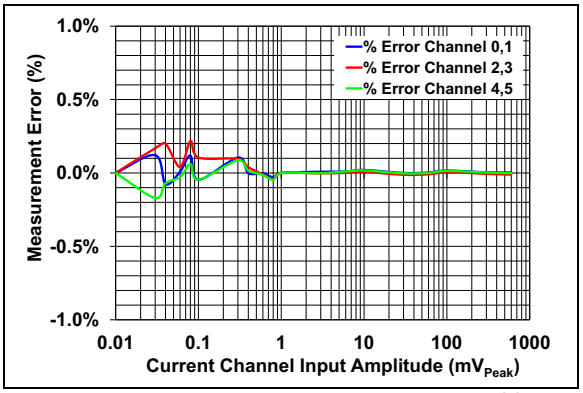

FIGURE 2-6: *Measurement Error with 2-Point Calibration.*

© 2013-2020 Microchip Technology Inc.

Note: Unless otherwise indicated, AV_{DD} = 3V; DV_{DD} = 3V; T_A = +25°C; MCLK = 4 MHz; PRESCALE = 1; OSR = 256; GAIN = 1; Dithering = Maximum; V_{IN} = -0.5 dBFS @ 60 Hz on all channels; VREFEXT = 0; CLKEXT = 1; BOOST[1:0] = 10.

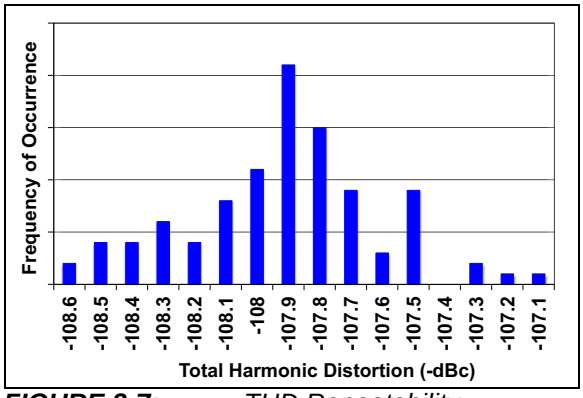

FIGURE 2-7: *THD Repeatability Histogram.*

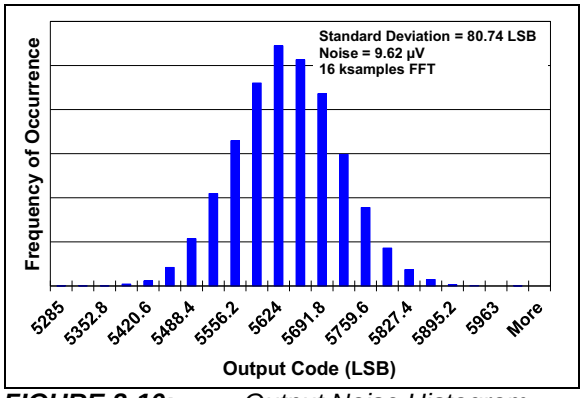

FIGURE 2-10: *Output Noise Histogram.*

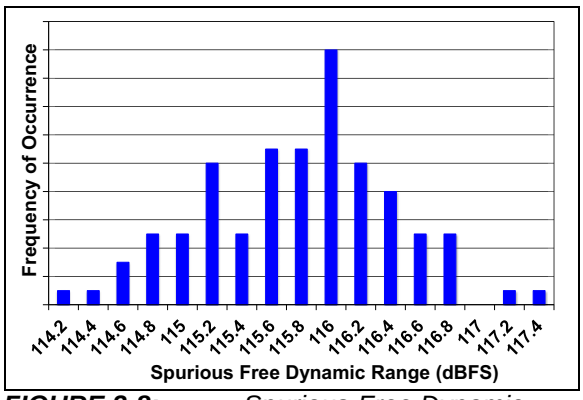

FIGURE 2-8: *Spurious-Free Dynamic Range Repeatability Histogram.*

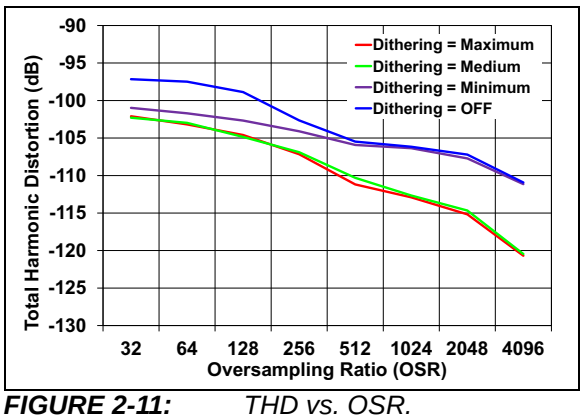

FIGURE 2-11: *THD vs. OSR.*

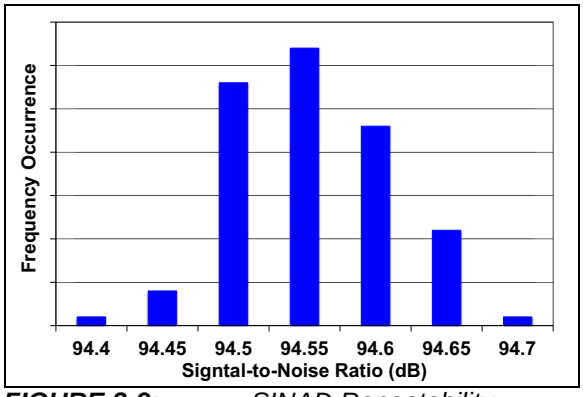

FIGURE 2-9: *SINAD Repeatability Histogram.*

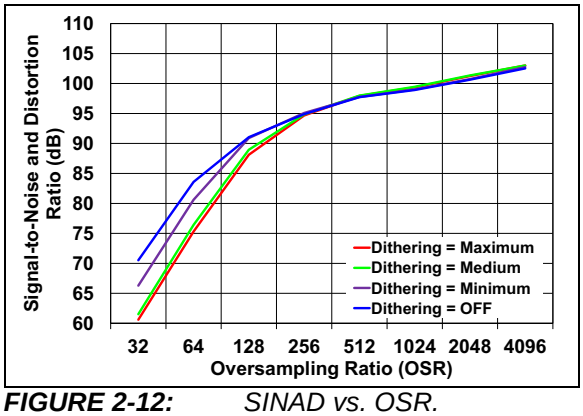

FIGURE 2-12: *SINAD vs. OSR.*

Note: Unless otherwise indicated, AV_{DD} = 3V; DV_{DD} = 3V; T_A = +25°C; MCLK = 4 MHz; PRESCALE = 1; OSR = 256; GAIN = 1; Dithering = Maximum; V_{IN} = -0.5 dBFS @ 60 Hz on all channels; VREFEXT = 0; CLKEXT = 1; BOOST[1:0] = 10.

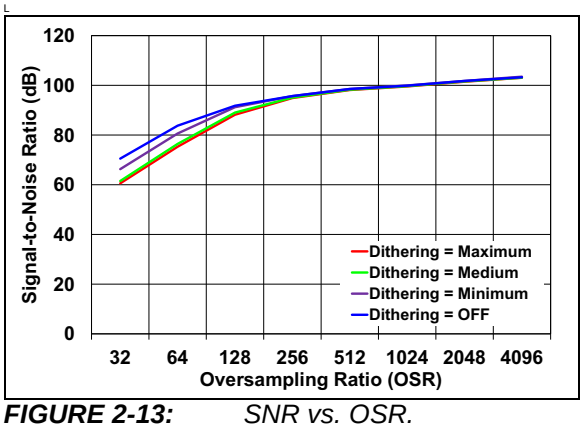

FIGURE 2-13: *SNR vs. OSR.*

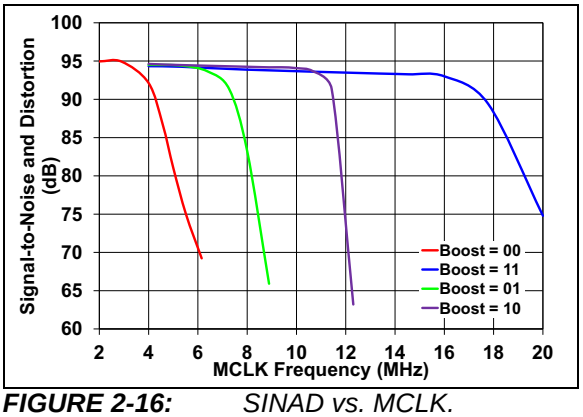

FIGURE 2-16: *SINAD vs. MCLK.*

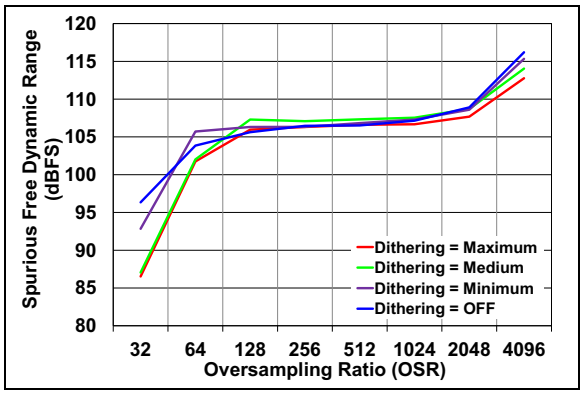

FIGURE 2-14: *SFDR vs. OSR.*

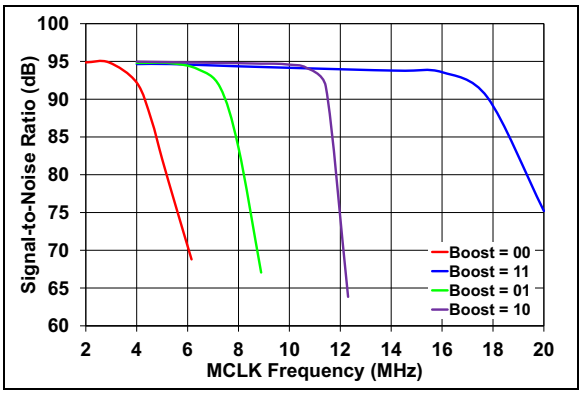

FIGURE 2-17: *SNR vs. MCLK.*

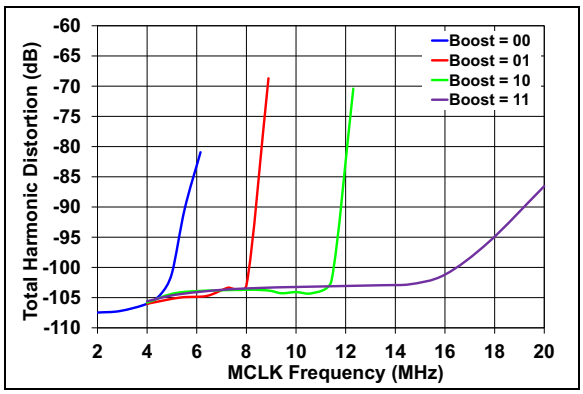

FIGURE 2-15: *THD vs. MCLK.*

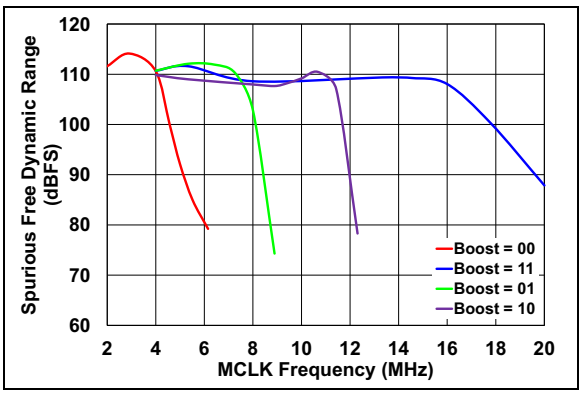

FIGURE 2-18: *SFDR vs. MCLK.*

© 2013-2020 Microchip Technology Inc.

Note: Unless otherwise indicated, AV_{DD} = 3V; DV_{DD} = 3V; T_A = +25°C; MCLK = 4 MHz; PRESCALE = 1; OSR = 256; GAIN = 1; Dithering = Maximum; V_{IN} = -0.5 dBFS @ 60 Hz on all channels; VREFEXT = 0; CLKEXT = 1; BOOST[1:0] = 10.

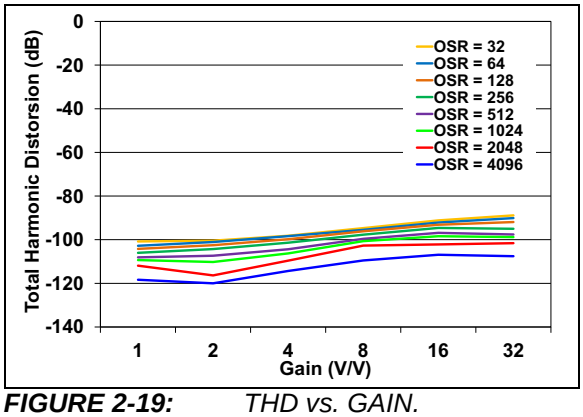

FIGURE 2-19: *THD vs. GAIN.*

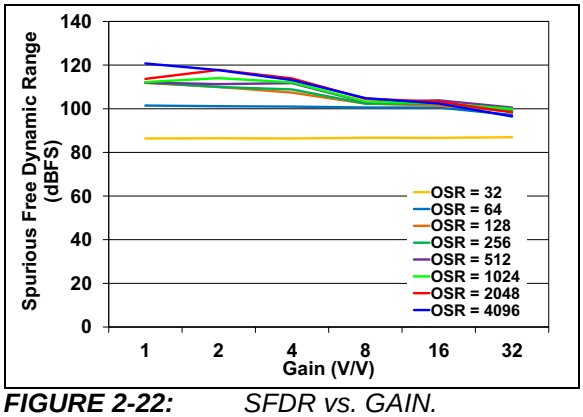

FIGURE 2-22: *SFDR vs. GAIN.*

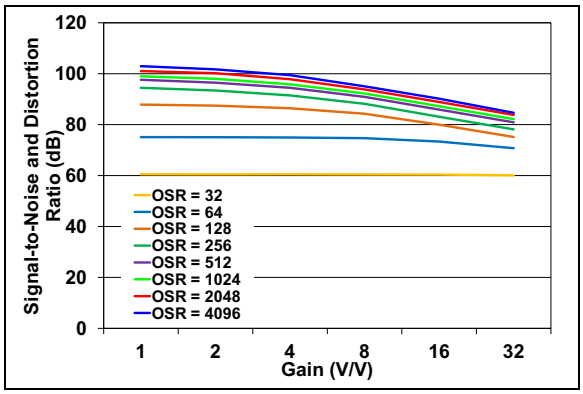

FIGURE 2-20: *SINAD vs. GAIN.*

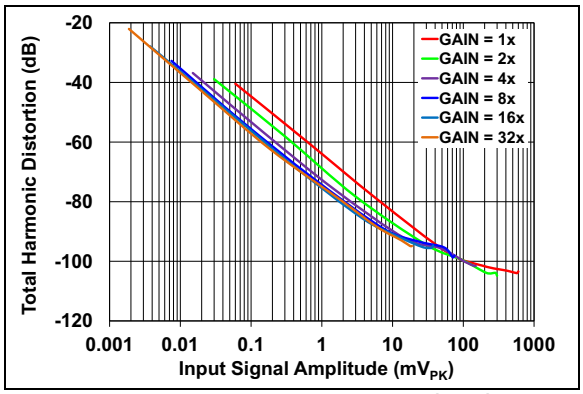

FIGURE 2-23: *THD vs. Input Signal Amplitude.*

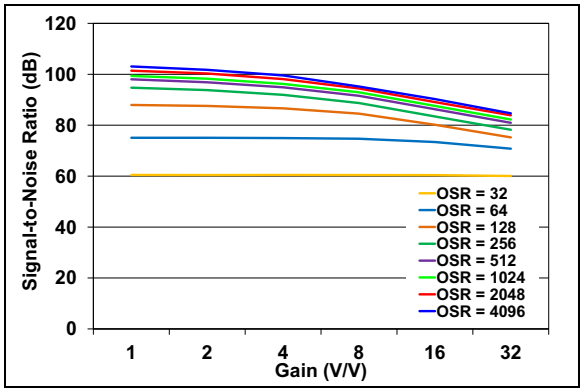

FIGURE 2-21: *SNR vs. GAIN.*

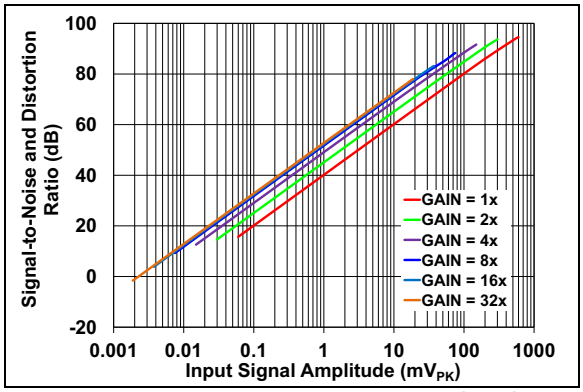

FIGURE 2-24: *SINAD vs. Input Signal Amplitude.*

Note: Unless otherwise indicated, AV_{DD} = 3V; DV_{DD} = 3V; T_A = +25°C; MCLK = 4 MHz; PRESCALE = 1; OSR = 256; GAIN = 1; Dithering = Maximum; V_{IN} = -0.5 dBFS @ 60 Hz on all channels; VREFEXT = 0; CLKEXT = 1; BOOST[1:0] = 10.

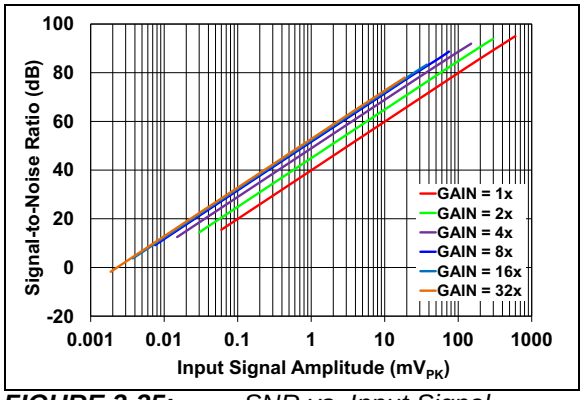

FIGURE 2-25: *SNR vs. Input Signal Amplitude.*

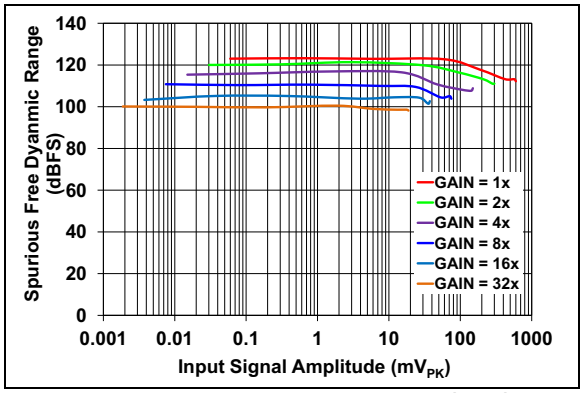

FIGURE 2-26: *SFDR vs. Input Signal Amplitude.*

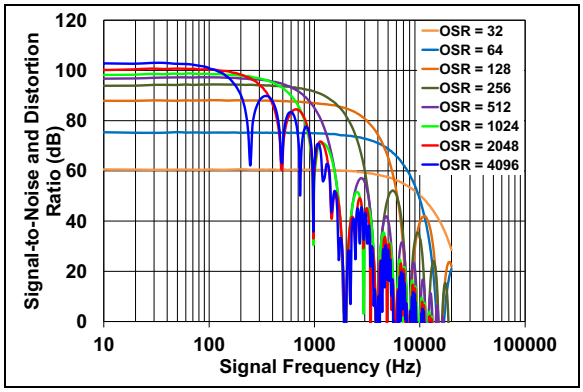

FIGURE 2-27: *SINAD vs. Input Frequency.*

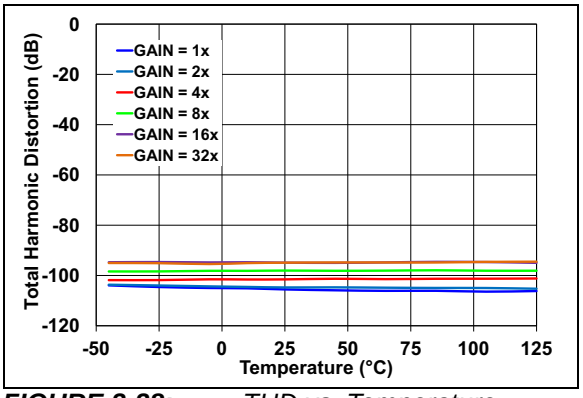

FIGURE 2-28: *THD vs. Temperature.*

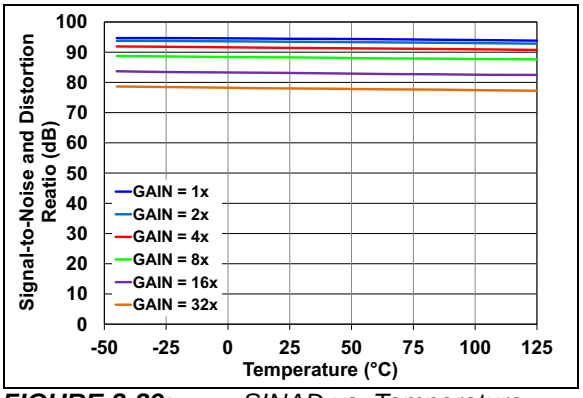

FIGURE 2-29: *SINAD vs. Temperature.*

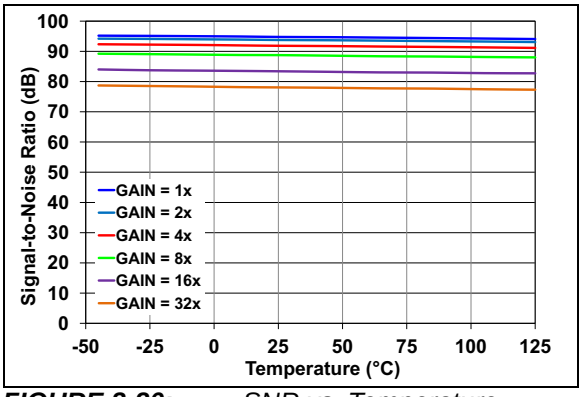

FIGURE 2-30: *SNR vs. Temperature.*

© 2013-2020 Microchip Technology Inc.

Note: Unless otherwise indicated, AV_{DD} = 3V; DV_{DD} = 3V; T_A = +25°C; MCLK = 4 MHz; PRESCALE = 1; OSR = 256; GAIN = 1; Dithering = Maximum; V_{IN} = -0.5 dBFS @ 60 Hz on all channels; VREFEXT = 0; CLKEXT = 1; BOOST[1:0] = 10.

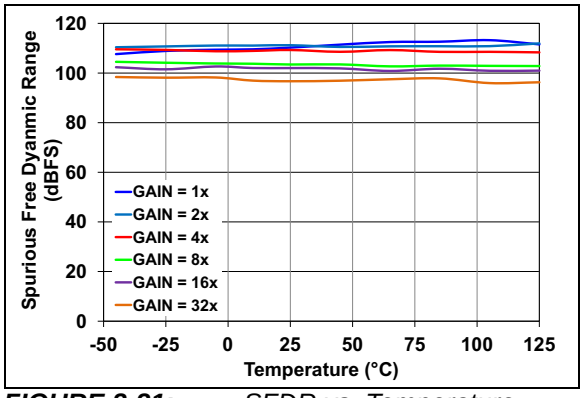

FIGURE 2-31: *SFDR vs. Temperature.*

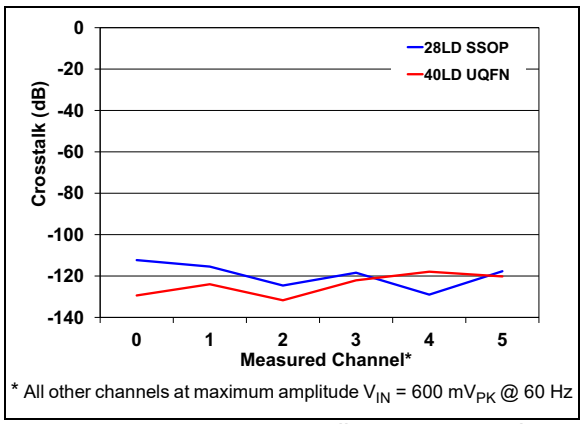

FIGURE 2-32: *Crosstalk vs. Measured Channel.*

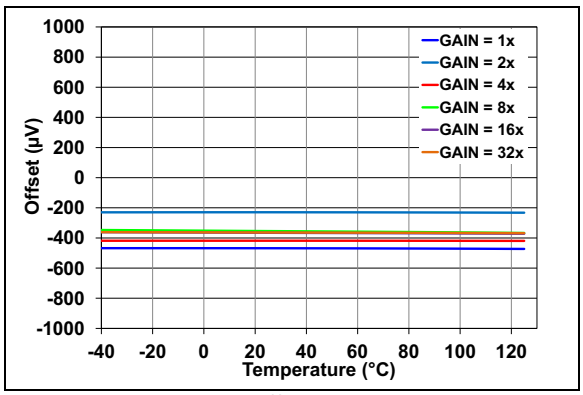

FIGURE 2-33: *Offset vs. Temperature vs. Gain.*

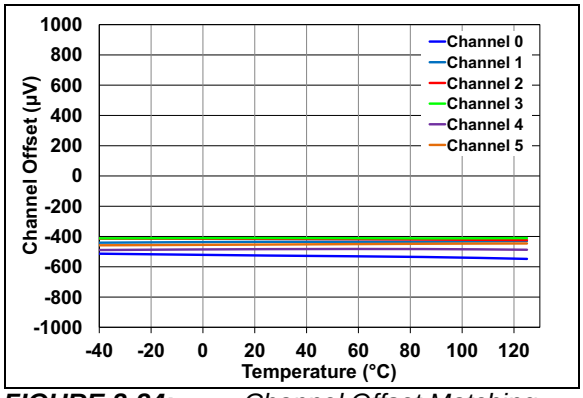

FIGURE 2-34: *Channel Offset Matching vs. Temperature.*

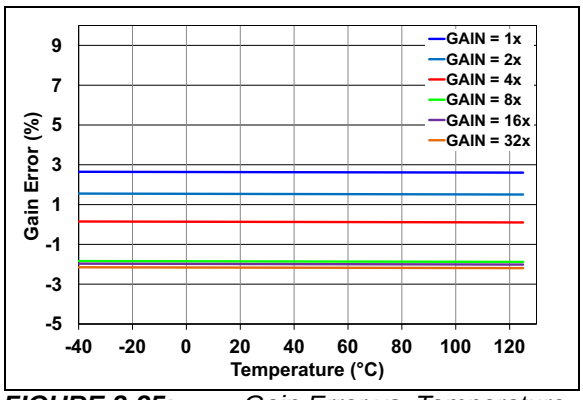

FIGURE 2-35: *Gain Error vs. Temperature vs. Gain.*

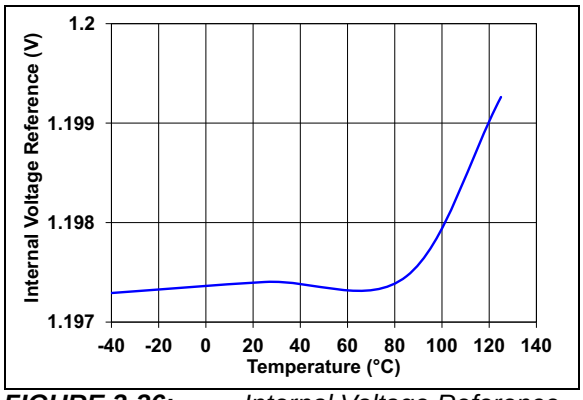

FIGURE 2-36: *Internal Voltage Reference vs. Temperature.*

Note: Unless otherwise indicated, AV_{DD} = 3V; DV_{DD} = 3V; T_A = +25°C; MCLK = 4 MHz; PRESCALE = 1; OSR = 256; GAIN = 1; Dithering = Maximum; V_{IN} = -0.5 dBFS @ 60 Hz on all channels; VREFEXT = 0; CLKEXT = 1; BOOST[1:0] = 10.

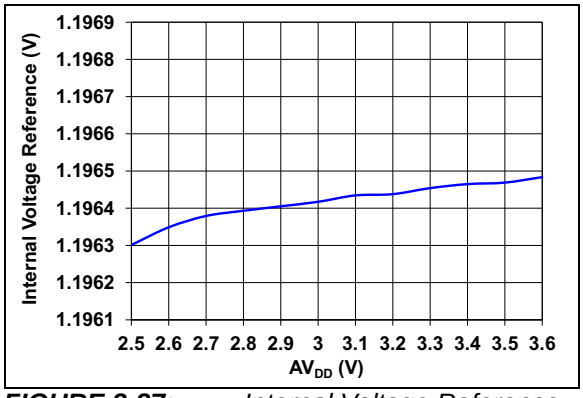

FIGURE 2-37: *Internal Voltage Reference vs. Supply Voltage.*

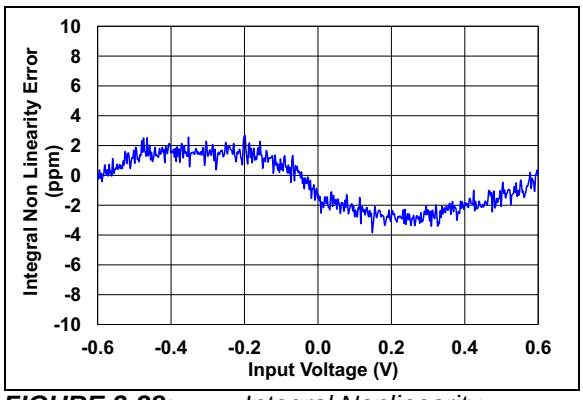

FIGURE 2-38: *Integral Nonlinearity (Dithering Maximum).*

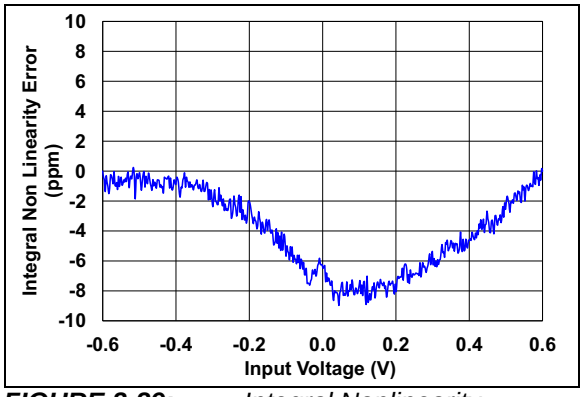

FIGURE 2-39: *Integral Nonlinearity (Dithering Off).*

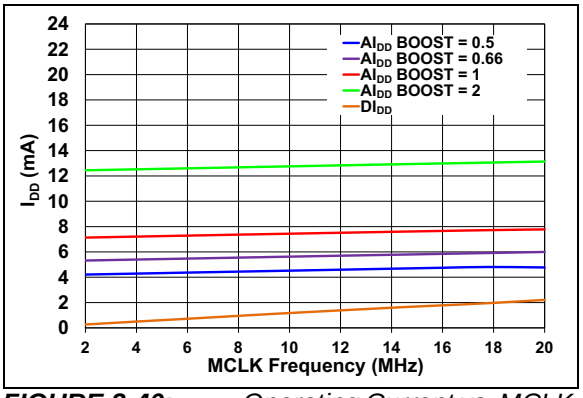

FIGURE 2-40: *Operating Current vs. MCLK Frequency vs. BOOST, V_{DD} = 3.3V.*

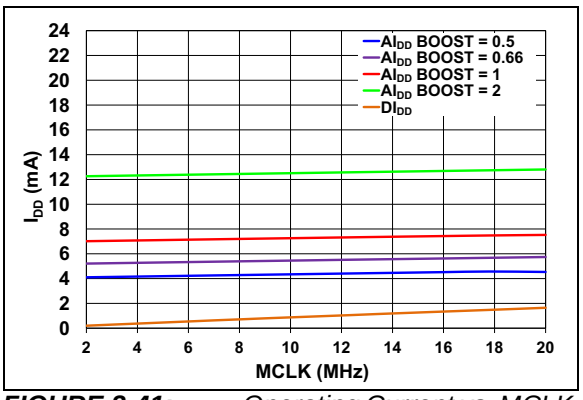

FIGURE 2-41: *Operating Current vs. MCLK Frequency vs. BOOST, V_{DD} = 2.7V.*

© 2013-2020 Microchip Technology Inc.

3.0 PIN DESCRIPTION

The description of the pins is listed in Table 3-1.

TABLE 3-1: SIX-CHANNEL MCP3913 PIN FUNCTIONS

MCP3913 SSOP	MCP3913 UQFN	Symbol	Function
1	18, 35	AV_{DD}	Analog Power Supply Pin
2	37	CH0+	Noninverting Analog Input Pin for Channel 0
3	38	CH0-	Inverting Analog Input Pin for Channel 0
4	39	CH1-	Inverting Analog Input Pin for Channel 1
5	40	CH1+	Noninverting Analog Input Pin for Channel 1
6	1	CH2+	Noninverting Analog Input Pin for Channel 2
7	2	CH2-	Inverting Analog Input Pin for Channel 2
8	3	CH3-	Inverting Analog Input Pin for Channel 3
9	4	CH3+	Noninverting Analog Input Pin for Channel 3
10	7	CH4+	Noninverting Analog Input Pin for Channel 4
11	8	CH4-	Inverting Analog Input Pin for Channel 4
12	9	CH5-	Inverting Analog Input Pin for Channel 5
13	10	CH5+	Noninverting Analog Input Pin for Channel 5
14	15	REFIN+/OUT	Noninverting Voltage Reference Input and Internal Reference Output Pin
15	16	REFIN-	Inverting Voltage Reference Input Pin
16	17, 36	A_{GND}	Analog Ground Pin, Return Path for Internal Analog Circuitry
17, 20	21, 24, 32	D_{GND}	Digital Ground Pin, Return Path for Internal Digital Circuitry
18	22	$\overline{DR}$	Data Ready Signal Output Pin
19	5, 6, 11, 12, 13, 14, 19, 23, 34	NC	No Connect (for better EMI results, connect to A_{GND})
21	25	OSC1/CLKI	Oscillator Crystal Connection Pin or External Clock Input Pin
22	26	OSC2	Oscillator Crystal Connection Pin
23	27	$\overline{CS}$	Serial Interface Chip Select Input Pin
24	28	SCK	Serial Interface Clock Input Pin for SPI
25	29	SDO	Serial Interface Data Output Pin
26	30	SDI	Serial Interface Data Input Pin
27	31	$\overline{RESET}$	Master Reset Logic Input Pin
28	20, 33	DV_{DD}	Digital Power Supply Pin
—	41	EP	Exposed Thermal Pad, must be connected to A_{GND} or floating

3.1 Analog Power Supply (AV_{DD})

AV_{DD} is the power supply voltage for the analog circuitry within the MCP3913. It is distributed on several pins (pins 18 and 35 in the 40-lead UQFN package, one pin only in the 28-lead SSOP package). For optimal performance, connect these pins together using a star connection and connect the appropriate bypass capacitors (typically a 10 µF in parallel with a 0.1 µF ceramic). AV_{DD} should be maintained between 2.7V and 3.6V for specified operation.

To ensure proper functionality of the device, at least one of these pins must be properly connected. To ensure optimal performance of the device, all the pins must be properly connected. If any of these pins are left floating, the accuracy and noise specifications are not ensured.

3.2 ADC Differential Analog Inputs (CHn+/CHn-)

The CHn+/- pins (n comprised between 0 and 5) are the six fully differential analog voltage inputs for the Delta-Sigma ADCs.

The linear and specified region of the channels are dependent on the PGA gain. This region corresponds to a differential voltage range of ±600 mV/GAIN with V_{REF} = 1.2V.

The maximum absolute voltage, with respect to A_{GND}, for each CHn+/- input pin is ±1V with no distortion, and ±2V with no breaking after continuous voltage. This maximum absolute voltage is not proportional to the V_{REF} voltage.

3.3 Noninverting Reference Input, Internal Reference Output (REFIN+/OUT)

This pin is the noninverting side of the differential voltage reference input for all ADCs or the internal voltage reference output.

When VREFEXT = `1`, an external voltage reference source can be used and the internal voltage reference is disabled. When using an external differential voltage reference, it should be connected to its V_{REF}+ pin. When using an external single-ended reference, it should be connected to this pin.

When VREFEXT = `0`, the internal voltage reference is enabled and connected to this pin through a switch. This voltage reference has minimal drive capability and thus needs proper buffering and bypass capacitances (a 0.1 µF ceramic capacitor is sufficient in most cases) if used as a voltage source.

If the voltage reference is only used as an internal V_{REF}, adding bypass capacitance on REFIN+/OUT is not necessary for keeping ADC accuracy, but a minimal 0.1 µF ceramic capacitance can be connected to avoid EMI/EMC susceptibility issues due to the antenna, created by the REFIN+/OUT pin, if left floating.

3.4 Inverting Reference Input (REFIN-)

This pin is the inverting side of the differential voltage reference input for all ADCs. When using an external differential voltage reference, it should be connected to its V_{REF}- pin. When using an external single-ended voltage reference, or when VREFEXT = `0` (default) and using the internal voltage reference, the pin should be directly connected to A_{GND}.

3.5 Analog Ground (A_{GND})

A_{GND} is the ground reference voltage for the analog circuitry within the MCP3913. It is distributed on several pins (pins 17 and 36 in the 40-lead UQFN package, one pin only in the 28-lead SSOP package). For optimal performance, it is recommended to connect these pins together using a star connection, and to connect them to the same ground node voltage as D_{GND}, again, preferably with a star connection.

At least one of these pins needs to be properly connected to ensure proper functionality of the device. All of these pins need to be properly connected to ensure optimal performance of the device. If any of these pins are left floating, the accuracy and noise specifications are not ensured. If an analog ground plane is available, it is recommended that these pins be tied to this plane of the PCB. This plane should also reference all other analog circuitry in the system.

3.6 Digital Ground (D_{GND})

D_{GND} is the ground reference voltage for the digital circuitry within the MCP3913. It is distributed on several pins (pins 21, 24 and 32 in the 40-lead UQFN package, two pins only in the 28-lead SSOP package). For optimal performance, connect these pins together using a star connection and connect them to the same ground node voltage as A_{GND}, again, preferably with a star connection.

At least one of these pins needs to be properly connected to ensure proper functionality of the device. All of these pins need to be properly connected to ensure optimal performance of the device. If any of these pins are left floating, the accuracy and noise specifications are not ensured. If a digital ground plane is available, it is recommended that these pins be tied to this plane of the Printed Circuit Board (PCB). This plane should also reference all other digital circuitry in the system.

© 2013-2020 Microchip Technology Inc.

3.7 Data Ready Output ($\overline{DR}$)

The Data Ready pin indicates if a new conversion result is ready to be read. The default state of this pin is logic high when $\overline{DR_HIZ}$ = 1 and is high-impedance when $\overline{DR_HIZ}$ = 0 (default). After each conversion is finished, a logic low pulse will take place on the Data Ready pin to indicate the conversion result is ready as an interrupt. This pulse is synchronous with the master clock and has a defined and constant width.

The Data Ready pin is independent of the SPI interface and acts like an interrupt output. The Data Ready pin state is not latched and the pulse width (and period) are both determined by the MCLK frequency, oversampling rate and internal clock prescale settings. The data ready pulse width is equal to half of a DMCLK period and the frequency of the pulses is equal to DRCLK (see Figure 1-3).

Note:	This pin should not be left floating when the $\overline{DR_HIZ}$ bit is low; a 100 kΩ pull-up resistor connected to DV_{DD} is recommended.

3.8 Oscillator and Master Clock Input Pin (OSC1/CLKI)

OSC1/CLKI and OSC2 provide the master clock for the device. When CLKEXT = 0, a resonant crystal or clock source with a similar sinusoidal waveform must be placed across the OSC1 and OSC2 pins to ensure proper operation.

The typical clock frequency specified is 4 MHz. For proper operation and for optimizing ADC accuracy, AMCLK should be limited to the maximum frequency defined in Table 5-2 for the function of the BOOST and PGA setting chosen. MCLK can take larger values as long as the prescaler settings (PRE[1:0]) limit AMCLK = MCLK/PRESCALE in the defined range in Table 5-2. Appropriate load capacitance should be connected to these pins for proper operation.

Note:	When CLKEXT = 1, the crystal oscillator is disabled. OSC1 becomes the master clock input, CLKI, a direct path for an external clock source. One example would be a clock source generated by an MCU.

3.9 Crystal Oscillator (OSC2)

When CLKEXT = 0 (default), a resonant crystal or clock source with a similar sinusoidal waveform must be placed across the OSC1 and OSC2 pins to ensure proper operation. Appropriate load capacitance should be connected to these pins for proper operation.

When CLKEXT = 1, this pin should be connected to D_{GND} at all times (an internal pull-down operates this function if the pin is left floating).

3.10 Chip Select ($\overline{CS}$)

This pin is the Serial Peripheral Interface (SPI) chip select that enables serial communication. When this pin is logic high, no communication can take place. A chip select falling edge initiates serial communication and a chip select rising edge terminates the communication. No communication can take place, even when $\overline{CS}$ is logic low, if $\overline{RESET}$ is also logic low.

This input is Schmitt triggered.

3.11 Serial Data Clock (SCK)

This is the serial clock pin for SPI communication. Data are clocked into the device on the rising edge of SCK. Data are clocked out of the device on the falling edge of SCK.

The MCP3913 SPI interface is compatible with SPI Modes 0,0 and 1,1. SPI modes can be changed during a $\overline{CS}$ high time.

The maximum clock speed specified is 20 MHz. SCK and MCLK are two different and asynchronous clocks; SCK is only required when a communication happens, while MCLK is continuously required when the part is converting analog inputs.

This input is Schmitt triggered.

3.12 Serial Data Output (SDO)

This is the SPI data output pin. Data are clocked out of the device on the falling edge of SCK.

This pin remains in a high-impedance state during the command byte. It also stays high-impedance during the entire communication for WRITE commands and when the $\overline{CS}$ pin is logic high, or when the $\overline{RESET}$ pin is logic low. This pin is active only when a READ command is processed. The interface is half-duplex (inputs and outputs do not happen at the same time).

3.13 Serial Data Input (SDI)

This is the SPI data input pin. Data are clocked into the device on the rising edge of SCK. When $\overline{CS}$ is logic low, this pin is used to communicate with a series of 8-bit commands. The interface is half-duplex (inputs and outputs do not happen at the same time).

Each communication starts with a chip select falling edge, followed by an 8-bit command word entered through the SDI pin. Each command is either a READ or a WRITE command. Toggling SDI after a READ command, or when $\overline{CS}$ is logic high, has no effect.

This input is Schmitt triggered.

3.14 Master Reset ($\overline{\text{RESET}}$)

This pin is active-low and places the entire chip in a Reset state when active.

When $\overline{\text{RESET}}$ is logic low, all registers are reset to their default value, no communication can take place and no clock is distributed inside the part, except in the input structure if MCLK is applied (if MCLK is Idle, then no clock is distributed). This state is equivalent to a Power-on Reset (POR) state.

Since the default state of the ADCs is on, the analog power consumption when $\overline{\text{RESET}}$ is logic low is equivalent to when $\overline{\text{RESET}}$ is logic high. Only the digital power consumption is largely reduced because this current consumption is essentially dynamic and is reduced drastically when there is no clock running.

All the analog biases are enabled during a Reset, so that the part is fully operational just after a $\overline{\text{RESET}}$ rising edge if MCLK is applied when $\overline{\text{RESET}}$ is logic low. If MCLK is not applied, there is a time after a Hard Reset when the conversion may not accurately correspond to the start-up of the input structure.

This input is Schmitt triggered.

3.15 Digital Power Supply (DV_{DD})

DV_{DD} is the power supply voltage for the digital circuitry within the MCP3913. It is distributed on several pins (pins 20 and 33 in the 40-lead UQFN package, one pin only in the 28-lead SSOP package). For optimal performance, it is recommended to connect these pins together using a star connection and to connect appropriate bypass capacitors (typically a 10 µF in parallel with a 0.1 µF ceramic). DV_{DD} should be maintained between 2.7V and 3.6V for the specified operation.

At least one of these pins needs to be properly connected to ensure proper functionality of the device. All of these pins need to be properly connected to ensure optimal performance of the device. If any of these pins are left floating, the accuracy and noise specifications are not ensured.

3.16 Exposed Thermal Pad

This pin must be connected to A_{GND} or left floating for proper operation. Connecting it to A_{GND} is preferable for lowest noise performance and best thermal behavior.

© 2013-2020 Microchip Technology Inc.

4.0 TERMINOLOGY AND FORMULAS

This section defines the terms and formulas used throughout this data sheet. The following terms are defined:

- **MCLK – Master Clock**
- **AMCLK – Analog Master Clock**
- **DMCLK – Digital Master Clock**
- **DRCLK – Data Rate Clock**
- **OSR – Oversampling Ratio**
- **Offset Error**
- **Gain Error**
- **Integral Nonlinearity Error**
- **Signal-to-Noise Ratio (SNR)**
- **Signal-to-Noise Ratio and Distortion (SINAD)**
- **Total Harmonic Distortion (THD)**
- **Spurious-Free Dynamic Range (SFDR)**
- **MCP3913 Delta-Sigma Architecture**
- **Idle Tones**
- **Dithering**
- **Crosstalk**
- **PSRR**
- **CMRR**
- **ADC Reset Mode**
- **Hard Reset Mode (RESET = 0)**
- **ADC Shutdown Mode**
- **Full Shutdown Mode**
- **Measurement Error**

4.1 MCLK – Master Clock

This is the fastest clock present on the device. This is the frequency of the crystal placed at the OSC1/OSC2 inputs when CLKEXT = 0, or the frequency of the clock input at the OSC1/CLKI when CLKEXT = 1. See Figure 4-1.

4.2 AMCLK – Analog Master Clock

AMCLK is the clock frequency that is present on the analog portion of the device after prescaling has occurred, via the CONFIG0 PRE[1:0] register bits (see Equation 4-1). The analog portion includes the PGAs and the Delta-Sigma modulators.

EQUATION 4-1:

$$AMCLK = \frac{MCLK}{PRESCALE}$$

TABLE 4-1: MCP3913 OVERSAMPLING RATIO SETTINGS

Config. PRE[1:0]		Analog Master Clock Prescale
0	0	AMCLK = MCLK/1 (default)
0	1	AMCLK = MCLK/2
1	0	AMCLK = MCLK/4
1	1	AMCLK = MCLK/8

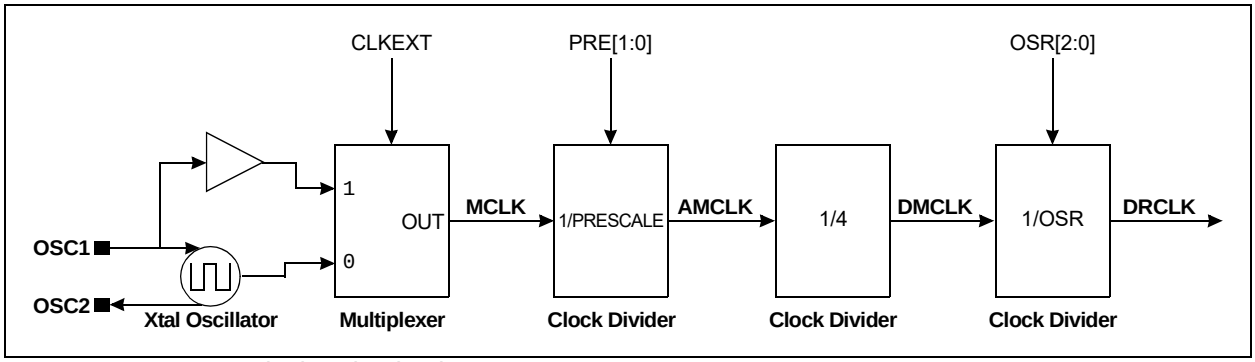

FIGURE 4-1: *Clock Sub-Circuitry.*

4.3 DMCLK – Digital Master Clock

This is the clock frequency that is present on the digital portion of the device after prescaling and division by four (Equation 4-2). This is also the sampling frequency, which is the rate at which the modulator outputs are refreshed. Each period of this clock corresponds to one sample and one modulator output. See Figure 4-1.

EQUATION 4-2:

$$DMCLK = \frac{AMCLK}{4} = \frac{MCLK}{4 \times PRESCALE}$$

4.4 DRCLK – Data Rate Clock

This is the output data rate (i.e., the rate at which the ADCs output new data). Each new data are signaled by a data ready pulse on the $\overline{DR}$ pin.

This data rate is depending on the OSR and the prescaler with the formula in Equation 4-3.

EQUATION 4-3:

$$DRCLK = \frac{DMCLK}{OSR} = \frac{AMCLK}{4 \times OSR} = \frac{MCLK}{4 \times OSR \times PRESCALE}$$

Since this is the output data rate, and because the decimation filter is a SINC (or notch) filter, there is a notch in the filter transfer function at each integer multiple of this rate.

Table 4-2 describes the various combinations of OSR and PRESCALE, and their associated AMCLK, DMCLK and DRCLK rates.

© 2013-2020 Microchip Technology Inc.

TABLE 4-2: DEVICE DATA RATES IN FUNCTION OF MCLK, OSR AND PRESCALE, MCLK = 4 MHz

PRE[1:0]		OSR[2:0]			OSR	AMCLK	DMCLK	DRCLK	DRCLK (ksps)	SINAD (dB)(1)	ENOB from SINAD (bits)(1)
1	1	1	1	1	4096	MCLK/8	MCLK/32	MCLK/131072	.035	102.5	16.7
1	1	1	1	0	2048	MCLK/8	MCLK/32	MCLK/65536	.061	100	16.3
1	1	1	0	1	1024	MCLK/8	MCLK/32	MCLK/32768	.122	97	15.8
1	1	1	0	0	512	MCLK/8	MCLK/32	MCLK/16384	.244	96	15.6
1	1	0	1	1	256	MCLK/8	MCLK/32	MCLK/8192	0.488	95	15.5
1	1	0	1	0	128	MCLK/8	MCLK/32	MCLK/4096	0.976	91	14.8
1	1	0	0	1	64	MCLK/8	MCLK/32	MCLK/2048	1.95	84	13.6
1	1	0	0	0	32	MCLK/8	MCLK/32	MCLK/1024	3.9	70	11.3
1	0	1	1	1	4096	MCLK/4	MCLK/16	MCLK/65536	.061	102.5	16.7
1	0	1	1	0	2048	MCLK/4	MCLK/16	MCLK/32768	.122	100	16.3
1	0	1	0	1	1024	MCLK/4	MCLK/16	MCLK/16384	.244	97	15.8
1	0	1	0	0	512	MCLK/4	MCLK/16	MCLK/8192	.488	96	15.6
1	0	0	1	1	256	MCLK/4	MCLK/16	MCLK/4096	0.976	95	15.5
1	0	0	1	0	128	MCLK/4	MCLK/16	MCLK/2048	1.95	91	14.8
1	0	0	0	1	64	MCLK/4	MCLK/16	MCLK/1024	3.9	84	13.6
1	0	0	0	0	32	MCLK/4	MCLK/16	MCLK/512	7.8125	70	11.3
0	1	1	1	1	4096	MCLK/2	MCLK/8	MCLK/32768	.122	102.5	16.7
0	1	1	1	0	2048	MCLK/2	MCLK/8	MCLK/16384	.244	100	16.3
0	1	1	0	1	1024	MCLK/2	MCLK/8	MCLK/8192	.488	97	15.8
0	1	1	0	0	512	MCLK/2	MCLK/8	MCLK/4096	.976	96	15.6
0	1	0	1	1	256	MCLK/2	MCLK/8	MCLK/2048	1.95	95	15.5
0	1	0	1	0	128	MCLK/2	MCLK/8	MCLK/1024	3.9	91	14.8
0	1	0	0	1	64	MCLK/2	MCLK/8	MCLK/512	7.8125	84	13.6
0	1	0	0	0	32	MCLK/2	MCLK/8	MCLK/256	15.625	70	11.3
0	0	1	1	1	4096	MCLK	MCLK/4	MCLK/16384	.244	102.5	16.7
0	0	1	1	0	2048	MCLK	MCLK/4	MCLK/8192	.488	100	16.3
0	0	1	0	1	1024	MCLK	MCLK/4	MCLK/4096	.976	97	15.8
0	0	1	0	0	512	MCLK	MCLK/4	MCLK/2048	1.95	96	15.6
0	0	0	1	1	256	MCLK	MCLK/4	MCLK/1024	3.9	95	15.5
0	0	0	1	0	128	MCLK	MCLK/4	MCLK/512	7.8125	91	14.8
0	0	0	0	1	64	MCLK	MCLK/4	MCLK/256	15.625	84	13.6
0	0	0	0	0	32	MCLK	MCLK/4	MCLK/128	31.25	70	11.3

Note 1: For OSR = 32 and 64, DITHER = None. For OSR = 128 and higher, DITHER = Maximum. The SINAD values are given from GAIN = 1.

4.5 OSR – Oversampling Ratio

This is the ratio of the sampling frequency to the output data rate; OSR = DMCLK/DRCLK. The default OSR[2:0] is 256, or with MCLK = 4 MHz, PRESCALE = 1, AMCLK = 4 MHz, f_S = 1 MHz and f_D = 3.90625 ksps. The OSR[2:0] bits in Table 4-3 in the CONFIG0 register are used to change the Oversampling Ratio (OSR).

TABLE 4-3: MCP3913 OVERSAMPLING RATIO SETTINGS

OSR[2:0]			Oversampling Ratio (OSR)
0	0	0	32
0	0	1	64
0	1	0	128
0	1	1	256 (Default)
1	0	0	512
1	0	1	1024
1	1	0	2048
1	1	1	4096

4.6 Offset Error

This is the error induced by the ADC when the inputs are shorted together (V_{IN} = 0V). The specification incorporates both PGA and ADC offset contributions. This error varies with PGA and OSR settings. The offset is different on each channel and varies from chip-to-chip. The offset is specified in µV. The offset error can be digitally compensated independently, on each channel, through the OFFCAL_CHn registers with a 24-bit Calibration Word.

The offset on the MCP3913 has a low-temperature coefficient.

4.7 Gain Error

This is the error induced by the ADC on the slope of the transfer function. It is the deviation expressed in % compared to the ideal transfer function defined in Equation 5-3. The specification incorporates both PGA and ADC gain error contributions, but not the V_{REF} contribution (it is measured with an external V_{REF}).

This error varies with PGA and OSR settings. The gain error can be digitally compensated independently on each channel, through the GAINCAL_CHn registers with a 24-bit Calibration Word.

The gain error on the MCP3913 has a low-temperature coefficient.

4.8 Integral Nonlinearity Error

Integral nonlinearity error is the maximum deviation of an ADC transition point from the corresponding point of an ideal transfer function, with the offset and gain errors removed, or with the end points equal to zero.

It is the maximum remaining error after calibration of offset and gain errors for a DC input signal.

4.9 Signal-to-Noise Ratio (SNR)

For the MCP3913 ADCs, the Signal-to-Noise ratio is a ratio of the output fundamental signal power to the noise power (not including the harmonics of the signal), when the input is a sine wave at a predetermined frequency (see Equation 4-4); it is measured in dB. Usually, only the maximum Signal-to-Noise ratio is specified. The SNR figure depends mainly on the OSR and DITHER settings of the device.

EQUATION 4-4: SIGNAL-TO-NOISE RATIO

$$SNR(dB) = 10log\left(\frac{SignalPower}{NoisePower}\right)$$

4.10 Signal-to-Noise Ratio and Distortion (SINAD)

The most important Figure of Merit for analog performance of the ADCs present on the MCP3913 is the Signal-to-Noise and Distortion (SINAD) specification.

The Signal-to-Noise and Distortion ratio is similar to Signal-to-Noise ratio, with the exception that you must include the harmonic's power in the noise power calculation (see Equation 4-5). The SINAD specification depends mainly on the OSR and DITHER settings.

EQUATION 4-5: SINAD EQUATION

$$SINAD(dB) = 10log\left(\frac{SignalPower}{Noise + HarmonicsPower}\right)$$

The calculated combination of SNR and THD per the following formula also yields SINAD; see Equation 4-6.

EQUATION 4-6: SINAD, THD AND SNR RELATIONSHIP

$$SINAD(dB) = 10log\left[10^{\left(\frac{SNR}{10}\right)} + 10^{\left(\frac{-THD}{10}\right)}\right]$$

© 2013-2020 Microchip Technology Inc.

4.11 Total Harmonic Distortion (THD)

The total harmonic distortion is the ratio of the output harmonic's power to the fundamental signal power for a sine wave input and is defined in Equation 4-7.

EQUATION 4-7:

$$THD(dB) = 10log\left(\frac{HarmonicsPower}{FundamentalPower}\right)$$

The THD calculation includes the first 35 harmonics for the MCP3913 specifications. The THD is usually measured only with respect to the ten first harmonics, which lead artificially to better figures. THD is sometimes expressed in %. Equation 4-8 converts the THD in %.

EQUATION 4-8:

$$THD(\%) = 100 \times 10^{\frac{THD(dB)}{20}}$$

This specification depends mainly on the DITHER setting.

4.12 Spurious-Free Dynamic Range (SFDR)

SFDR is the ratio between the output power of the fundamental and the highest spur in the frequency spectrum (see Equation 4-9). The spur frequency is not necessarily a harmonic of the fundamental, even though it is usually the case. This figure represents the dynamic range of the ADC when a full-scale signal is used at the input. This specification depends mainly on the DITHER setting.

EQUATION 4-9:

$$SFDR(dB) = 10log\left(\frac{FundamentalPower}{HighestSpurPower}\right)$$

4.13 MCP3913 Delta-Sigma Architecture

The MCP3913 incorporates six Delta-Sigma ADCs with a multibit architecture. A Delta-Sigma ADC is an over-sampling converter that incorporates a built-in modulator, which digitizes the quantity of charges integrated by the modulator loop (see Figure 5-1). The quantizer is the block that is performing the Analog-to-Digital conversion. The quantizer is typically 1-bit, or a simple comparator, which helps maintain the linearity performance of the ADC (the DAC structure is, in this case, inherently linear).

Multibit quantizers help to lower the quantization error (the error fed back in the loop can be very large with 1-bit quantizers) without changing the order of the modulator or the OSR, which leads to better SNR figures. However, typically the linearity of such architectures is more difficult to achieve since the DAC linearity is as difficult to attain and its linearity limits the THD of such ADCs.

The quantizer present in each ADC channel in the MCP3913 is a Flash ADC composed of four comparators, arranged with equally spaced thresholds, and a thermometer coding. The MCP3913 also includes proprietary five-level DAC architecture that is inherently linear for improved THD figures.

4.14 Idle Tones

A Delta-Sigma converter is an integrating converter. It also has a finite quantization step (LSB) that can be detected by its quantizer. A DC input voltage that is below the quantization step should only provide an all zeros result, since the input is not large enough to be detected. As an integrating device, any Delta-Sigma ADC will show Idle tones. This means that the output will have spurs in the frequency content that depend on the ratio between quantization step voltage and the input voltage. These spurs are the result of the integrated sub-quantization step inputs that will eventually cross the quantization steps after a long enough integration. This will induce an AC frequency at the output of the ADC and can be shown in the ADC output spectrum.

These Idle tones are residues that are inherent to the quantization process and the fact that the converter is integrating at all times without being reset. They are residues of the finite resolution of the conversion process. They are very difficult to attenuate and they are heavily signal-dependent. They can degrade the SFDR and THD of the converter, even for DC inputs. They can be localized in the baseband of the converter, and are thus, difficult to filter from the actual input signal.

For power metering applications, Idle tones can be very disturbing because energy can be detected even at the 50 or 60 Hz frequency, depending on the DC offset of the ADCs, while no power is really present at the inputs. The only practical way to suppress or attenuate the IDLE tones phenomenon is to apply dithering to the ADC. The amplitudes of the Idle tones are a function of the order of the modulator, the OSR and the number of levels in the quantizer of the modulator. A higher order, a higher OSR or a higher number of levels for the quantizer will attenuate the amplitudes of the Idle tones.

© 2013-2020 Microchip Technology Inc.

4.15 Dithering

In order to suppress or attenuate the Idle tones present in any Delta-Sigma ADCs, dithering can be applied to the ADC. Dithering is the process of adding an error to the ADC feedback loop in order to “decorrelate” the outputs and “break” the Idle tone’s behavior. Usually a random or pseudorandom generator adds an analog or digital error to the feedback loop of the Delta-Sigma ADC in order to ensure that no tonal behavior can happen at its outputs. This error is filtered by the feedback loop and typically has a zero average value, so that the converter static transfer function is not disturbed by the dithering process. However, the dithering process slightly increases the noise floor (it adds noise to the part) while reducing its tonal behavior, and thus, improving SFDR and THD. The dithering process scrambles the Idle tones into baseband white noise and ensures that dynamic specs (SNR, SINAD, THD, SFDR) are less signal-dependent. The MCP3913 incorporates a proprietary dithering algorithm on all ADCs in order to remove Idle tones and improve THD, which is crucial for power metering applications.

4.16 Crosstalk

Crosstalk is defined as the perturbation caused on one ADC channel by all the other ADC channels present in the chip. It is a measurement of the isolation between each channel present in the chip.

This measurement is a two-step procedure:

1. Measure one ADC input with no perturbation on the other ADC (ADC inputs shorted).
2. Measure the same ADC input with a perturbation sine wave signal on all the other ADCs at a certain predefined frequency.

Crosstalk is the ratio between the output power of the ADC when the perturbation is and is not present, divided by the power of the perturbation signal. A lower crosstalk value implies more independence and isolation between the channels.

The measurement of this signal is performed under the default conditions of MCLK = 4 MHz:

- GAIN = 1
- PRESCALE = 1
- OSR = 256
- MCLK = 4 MHz

Step 1 for CH0 Crosstalk Measurement:

- CH0+ = CH0- = AGND
- CHn+ = CHn- = AGND,
  n comprised between 1 and 5

Step 2 for CH0 Crosstalk Measurement:

- CH0+ = CH0- = AGND
- CHn+ – CHn- = 1.2 V_{P-P} @ 50/60 Hz (full-scale sine wave), n comprised between 1 and 5

The crosstalk for Channel 0 is then calculated with the formula in Equation 4-10.

EQUATION 4-10:

$$CTalk(dB) = 10log\left(\frac{\Delta CH0Power}{\Delta CHnPower}\right)$$

The crosstalk depends slightly on the position of the channels in the MCP3913 device. This dependency is shown in Figure 2-32, where the inner channels show more crosstalk than the outer channels, since they are located closer to the perturbation sources. The outer channels have the preferred locations to minimize crosstalk.

4.17 PSRR

This is the ratio between a change in the power supply voltage and the ADC output codes. It measures the influence of the power supply voltage on the ADC outputs.

The PSRR specification can be DC (the power supply is taking multiple DC values) or AC (the power supply is a sine wave at a certain frequency with a certain Common-mode). In AC, the amplitude of the sine wave represents the change in the power supply; it is defined in Equation 4-11.

EQUATION 4-11:

$$PSRR(dB) = 20log\left(\frac{\Delta V_{OUT}}{\Delta AV_{DD}}\right)$$

Where: V_{OUT} is the equivalent input voltage that the output code translates to, with the ADC transfer function.

In the MCP3913 specification for DC PSRR, AV_{DD} varies from 2.7V to 3.6V, and for AC PSRR, a 50/60 Hz sine wave is chosen centered around 3.0V, with a maximum 300 mV amplitude. The PSRR specification is measured with $AV_{DD} = DV_{DD}$.

4.18 CMRR

CMRR is the ratio between a change in the Common-mode input voltage and the ADC output codes. It measures the influence of the Common-mode input voltage on the ADC outputs.

The CMRR specification can be DC (the Common-mode input voltage is taking multiple DC values) or AC (the Common-mode input voltage is a sine wave at a certain frequency with a certain Common-mode). In AC, the amplitude of the sine wave represents the change in the power supply; it is defined in Equation 4-12.

© 2013-2020 Microchip Technology Inc.

EQUATION 4-12:

$$CMRR(dB) = 20log\left(\frac{\Delta V_{OUT}}{\Delta V_{CM}}\right)$$

Where: V_{CM} = (CHn+ + CHn-)/2 is the Common-mode input voltage and V_{OUT} is the equivalent input voltage that the output code translates to, with the ADC transfer function.

In the MCP3913 specification, VCM varies from -1V to +1V.

4.19 ADC Reset Mode

ADC Reset mode (also called Soft Reset mode) can only be entered through setting the RESET[5:0] bits high in the Configuration register. This mode is defined as the condition where the converters are active, but their output is forced to ‘0’.

The Flash ADC output of the corresponding channel will be reset to its default value (‘0011’) in the MOD register.

The ADCs can immediately output meaningful codes after leaving Reset mode (and after the SINC filter settling time). This mode is both entered and exited through bit settings in the Configuration register.

Each converter can be placed in Soft Reset mode independently. The Configuration registers are not modified by the Soft Reset mode. A data ready pulse will not be generated by an ADC channel in Reset mode.

When an ADC exits ADC Reset mode, any phase delay present before Reset was entered will still be present. If one ADC was not in Reset, the ADC leaving Reset mode will automatically resynchronize the phase delay, relative to the other ADC channel per the phase delay register block, and give data ready pulses accordingly.

If an ADC is placed in Reset mode while others are converting, it does not shut down the internal clock. When coming out of Reset, it will be automatically resynchronized with the clock, which did not stop during Reset.

If all ADCs are in Soft Reset mode, the clock is no longer distributed to the digital core for low-power operation. Once any of the ADCs are back to normal operation, the clock is automatically distributed again.

However, when the eight channels are in Soft Reset mode, the input structure is still clocking if MCLK is applied, in order to properly bias the inputs, so that no leakage current is observed. If MCLK is not applied, large analog input leakage currents can be observed for highly negative input voltages (typically below -0.6V, referred to as A_{GND}).

4.20 Hard Reset Mode ($\overline{RESET}$ = 0)

This mode is only available during a POR or when the $\overline{RESET}$ pin is pulled logic low. The $\overline{RESET}$ pin logic low state places the device in Hard Reset mode. In this mode, all internal registers are reset to their default state.

The DC biases for the analog blocks are still active (i.e., the MCP3913 is ready to convert). However, this pin clears all conversion data in the ADCs. The comparators’ outputs of all ADCs are forced to their Reset state (‘0011’). The SINC filters are all reset, as well as their double-output buffers. The Hard Reset mode requires a minimum pulse low time (see **Section 1.0 “Electrical Characteristics”**). During a Hard Reset, no communication with the part is possible. The digital interface is maintained in a Reset state.

During this state, the clock, MCLK, can be applied to the part in order to properly bias the input structures of all channels. If not applied, large analog input leakage currents can be observed for highly negative input signals, and after removing the Hard Reset state, a certain start-up time is necessary to bias the input structure properly. During this delay, the ADC conversions can be inaccurate.

4.21 ADC Shutdown Mode

ADC Shutdown mode is defined as a state where the converters and their biases are off, consuming only leakage current. When one of the SHUTDOWN[5:0] bits is reset to ‘0’, the analog biases of the corresponding channel will be enabled, as well as the clock and the digital circuitry. The ADC of the corresponding channel will give a data ready after the SINC filter settling time has occurred. However, since the analog biases are not completely settled at the beginning of the conversion, the sampling may not be accurate during about 1 ms (corresponding to the settling time of the biasing in worst-case conditions). In order to ensure accuracy, the data ready pulse within the delay of 1 ms + settling time of the SINC filter should be discarded.

Each converter can be placed in Shutdown mode independently. The Configuration registers are not modified by the Shutdown mode. This mode is only available through programming the SHUTDOWN[5:0] bits of the CONFIG1 register.

The output data are flushed to all zeros while in ADC Shutdown mode. No data ready pulses are generated by any ADC while in ADC Shutdown mode.

When an ADC exits ADC Shutdown mode, any phase delay present before shutdown was entered will still be present. If one ADC was not in Shutdown, the ADC leaving Shutdown mode will automatically resynchronize the phase delay relative to the other ADC channel per the Phase Delay register block and give data ready pulses accordingly.

If an ADC is placed in Shutdown mode while others are converting, it is not shutting down the internal clock. When coming back out of Shutdown mode, it will automatically be resynchronized with the clock that did not stop during Reset.

If all ADCs are in ADC Shutdown mode, the clock is not distributed to the input structure or to the digital core for low-power operation. This can potentially cause high analog input leakage currents at the analog inputs if the input voltage is highly negative (typically below -0.6V, referred to as A_{GND}). Once either of the ADCs is back to normal operation, the clock is automatically distributed again.

4.22 Full Shutdown Mode

The lowest power consumption can be achieved when SHUTDOWN[5:0] = 111111, VREFEXT = CLKEXT = 1. This mode is called Full Shutdown mode and no analog circuitry is enabled. In this mode, both AV_{DD} and DV_{DD} POR monitoring are also disabled, and no clock is propagated throughout the chip. All ADCs are in Shutdown mode and the internal voltage reference is disabled. This mode does not reset the writable part of the register map to its default values.

The clock is no longer distributed to the input structure as well. This can potentially cause high analog input leakage currents at the analog inputs, if the input voltage is highly negative (typically below -0.6V, referred to as A_{GND}).

The only circuit that remains active is the SPI interface, but this circuit does not induce any static power consumption. If SCK is Idle, the only current consumption comes from the leakage currents induced by the transistors and is less than 5 µA on each power supply.

This mode can be used to power down the chip completely and avoid power consumption when there is no data to convert at the analog inputs. Any SCK or MCLK edge occurring while in this mode will induce dynamic power consumption.

Once any of the SHUTDOWN[5:0], CLKEXT and VREFEXT bits return to ‘0’, the two POR monitoring blocks are operational, and AV_{DD} and DV_{DD} monitoring can take place.

4.23 Measurement Error

The measurement error specification is typically used in power meter applications. This specification is a measurement of the linearity of the active energy of a given power meter across its dynamic range.

For this measurement, the goal is to measure the active energy of one phase when the voltage Root Mean Square (RMS) value is fixed, and the current RMS value is sweeping across the dynamic range specified by the meter. The measurement error is the nonlinearity error of the energy power across the current dynamic range; it is expressed in percent (%). Equation 4-13 shows the formula that calculates the measurement error:

EQUATION 4-13:

$$Measurement\ Error(I_{RMS}) = \frac{Measured\ Active\ Energy - Active\ Energy\ present\ at\ inputs}{Active\ Energy\ present\ at\ inputs} \times 100\%$$

In the present device, the calculation of the active energy is done externally as a post-processing step that typically happens in the microcontroller, considering, for example, the even channels as current channels and the odd channels as voltage channels. The odd channels (voltages) are fed with a full-scale sine wave at 600 mV peak, and are configured with GAIN = 1 and DITHER = Maximum. To obtain the active energy measurement error graphs, the even channels are fed with sine waves with amplitudes that vary from 600 mV peak to 60 µV peak, representing a 10000:1 dynamic range. The offset is removed on both current and voltage channels, and the channels are multiplied together to give instantaneous power. The active energy is calculated by multiplying the current and voltage channel, and averaging the results of this power during 20 seconds to extract the active energy. The sampling frequency is chosen as a multiple integer of line frequency (coherent sampling). Therefore, the calculation does not take into account any residue coming from bad synchronization.

The measurement error is a function of I_{RMS} and varies with the OSR, averaging time and MCLK frequency, and is tightly coupled with the noise and linearity specifications. The measurement error is a function of the linearity and THD of the ADCs, while the standard deviation of the measurement error is a function of the noise specification of the ADCs. Overall, the low THD specification enables low measurement error on a very large dynamic range (e.g., 10,000:1). A low noise and high SNR specification enables the decreasing of the measurement time, and therefore, the calibration time, to obtain a reliable measurement error specification.

Figure 2-5 shows the typical measurement error curves obtained with the samples acquired by the MCP3913, using the default settings with a 1-point and 2-point calibration. These calibrations are detailed in **Section 7.0 “Basic Application Recommendations”**.

© 2013-2020 Microchip Technology Inc.

5.0 DEVICE OVERVIEW

5.1 Analog Inputs (CHn+/-)

The MCP3913 analog inputs can be connected directly to current and voltage transducers (such as shunts, Current Transformers or Rogowski coils). Each input pin is protected by specialized ESD structures that allow bipolar ±2V continuous voltage, with respect to A_{GND}, to be present at their inputs without the risk of permanent damage.

All channels have fully differential voltage inputs for better noise performance. The absolute voltage at each pin, relative to A_{GND}, should be maintained in the ±1V range during operation in order to ensure the specified ADC accuracy. The Common-mode signals should be adapted to respect both the previous conditions and the differential input voltage range. For best performance, the Common-mode signals should be maintained to A_{GND}.

Note: If the analog inputs are held to a potential of -0.6 to -1V for extended periods of time, MCLK must be present inside the device in order to avoid large leakage currents at the analog inputs. This is true even during Hard Reset mode or the Soft Reset of all ADCs. However, during the Shutdown mode of all the ADCs or POR state, the clock is not distributed inside the circuit. During these states, it is recommended to keep the analog input voltages above -0.6V, referred to A_{GND}, to avoid high analog input leakage currents.

5.2 Programmable Gain Amplifiers (PGA)

The six Programmable Gain Amplifiers (PGAs) reside at the front end of each Delta-Sigma ADC. They have two functions: translate the Common-mode voltage of the input from A_{GND} to an internal level between A_{GND} and AV_{DD}, and amplify the input differential signal. The translation of the Common-mode voltage does not change the differential signal, but recenters the Common-mode so that the input signal can be properly amplified.

The PGA block can be used to amplify very low signals, but the differential input range of the Delta-Sigma modulator must not be exceeded. The PGA on each channel is independent and is controlled by the PGA_CHn[2:0] bits in the GAIN register. Table 5-1 displays the gain settings for the PGA.

TABLE 5-1: PGA CONFIGURATION SETTING

Gain PGA_CHn[2:0]			Gain (V/V)	Gain (dB)	V_{IN} = (CHn+) – (CHn-) Differential Input Range (V)
0	0	0	1	0	±0.6
0	0	1	2	6	±0.3
0	1	0	4	12	±0.15
0	1	1	8	18	±0.075
1	0	0	16	24	±0.0375
1	0	1	32	30	±0.01875

Note: The two undefined settings are G = 1. This table is defined with V_{REF} = 1.2V.

5.3 Delta-Sigma Modulator

5.3.1 ARCHITECTURE

All ADCs are identical in the MCP3913 and they include a proprietary second-order modulator with a multibit 5-level DAC architecture (see Figure 5-1). The quantizer is a Flash ADC composed of four comparators with equally spaced thresholds and a thermometer output coding. The proprietary 5-level architecture ensures minimum quantization noise at the outputs of the modulators without disturbing linearity or inducing additional distortion. The sampling frequency is DMCLK (typically 1 MHz with MCLK = 4 MHz), so the modulators are refreshed at a DMCLK rate.

Figure 5-1 represents a simplified block diagram of the Delta-Sigma ADC present on MCP3913.

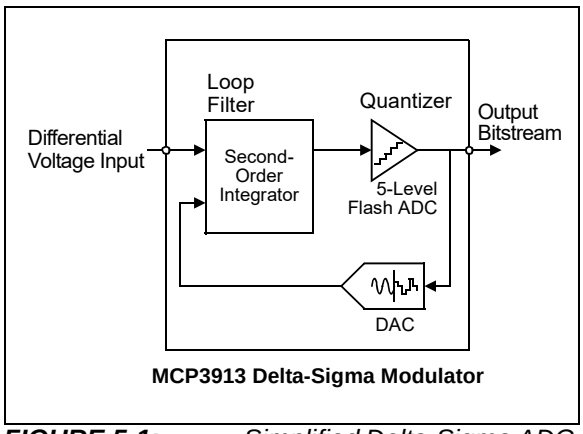

FIGURE 5-1: *Simplified Delta-Sigma ADC Block Diagram.*

5.3.2 MODULATOR INPUT RANGE AND SATURATION POINT

For a specified voltage reference value of 1.2V, the specified differential input range is ±600 mV. The input range is proportional to V_{REF} and scales according to the V_{REF} voltage. This range ensures the stability of the modulator over amplitude and frequency. Outside of this range, the modulator is still functional; however, its stability is no longer ensured, and therefore, it is not recommended to exceed this limit. The saturation point for the modulator is V_{REF}/1.5, since the transfer function of the ADC includes a gain of 1.5 by default (independent from the PGA setting); see **Section 5.5 "ADC Output Coding"**).

5.3.3 BOOST SETTINGS

The Delta-Sigma modulators include a programmable biasing circuit in order to further adjust the power consumption to the sampling speed applied through the MCLK. This can be programmed through the BOOST[1:0] bits, which are applied to all channels simultaneously.

The maximum achievable analog master clock speed (AMCLK), the maximum sampling frequency (DMCLK) and the maximum achievable data rate (DRCLK) highly depend on BOOST[1:0] and PGA_CHn[2:0] settings. Table 5-2 specifies the maximum AMCLK possible to keep optimal accuracy in the function of BOOST[1:0] and PGA_CHn[2:0] settings.

TABLE 5-2: MAXIMUM AMCLK LIMITS AS A FUNCTION OF BOOST AND PGA GAIN

Conditions		V_{DD} = 3.0V to 3.6V, T_A from -40°C to +125°C		V_{DD} = 2.7V to 3.6V, T_A from -40°C to +125°C	
Boost	**Gain**	**Maximum AMCLK (MHz) (SINAD within -3 dB from its maximum)**	**Maximum AMCLK (MHz) (SINAD within -5 dB from its maximum)**	**Maximum AMCLK (MHz) (SINAD within -3 dB from its maximum)**	**Maximum AMCLK (MHz) (SINAD within -5 dB from its maximum)**
0.5x	1	4	4	4	4
0.66x	1	6.4	7.3	6.4	7.3
1x	1	11.4	11.4	10.6	10.6
2x	1	16	16	16	16
0.5x	2	4	4	4	4
0.66x	2	6.4	7.3	6.4	7.3
1x	2	11.4	11.4	10.6	10.6
2x	2	16	16	13.3	14.5
0.5x	4	2.9	2.9	2.9	2.9
0.66x	4	6.4	6.4	6.4	6.4
1x	4	10.7	10.7	9.4	10.7
2x	4	16	16	16	16
0.5x	8	2.9	4	2.9	4
0.66x	8	7.3	8	6.4	7.3
1x	8	11.4	12.3	8	8.9
2x	8	16	16	10	11.4
0.5x	16	2.9	2.9	2.9	2.9
0.66x	16	6.4	7.3	6.4	7.3
1x	16	11.4	11.4	9.4	10.6
2x	16	13.3	16	8.9	11.4
0.5x	32	2.9	2.9	2.9	2.9
0.66x	32	7.3	7.3	7.3	7.3
1x	32	10.6	12.3	9.4	10,6
2x	32	13.3	16	10	11.4

© 2013-2020 Microchip Technology Inc.

5.3.4 DITHER SETTINGS

All modulators include a dithering algorithm that can be enabled through the DITHER[1:0] bits in the Configuration register. This dithering process improves THD and SFDR (for high OSR settings), while slightly increasing the noise floor of the ADCs. For power metering applications and applications that are distortion-sensitive, it is recommended to keep DITHER at maximum settings for best THD and SFDR performance. In the case of power metering applications, THD and SFDR are critical specifications. Optimizing SNR (noise floor) is not problematic due to the large averaging factor at the output of the ADCs. Therefore, even for low OSR settings, the dithering algorithm will show a positive impact on the performance of the application.

5.4 SINC^3 + SINC^1 Filter

The decimation filter present in all channels of the MCP3913 is a cascade of two SINC filters (SINC^3 + SINC^1): a third order SINC filter with a decimation ratio of OSR_3, followed by a first-order SINC filter with a decimation ratio of OSR_1 (moving average of OSR_1 values). Figure 5-2 represents the decimation filter architecture.

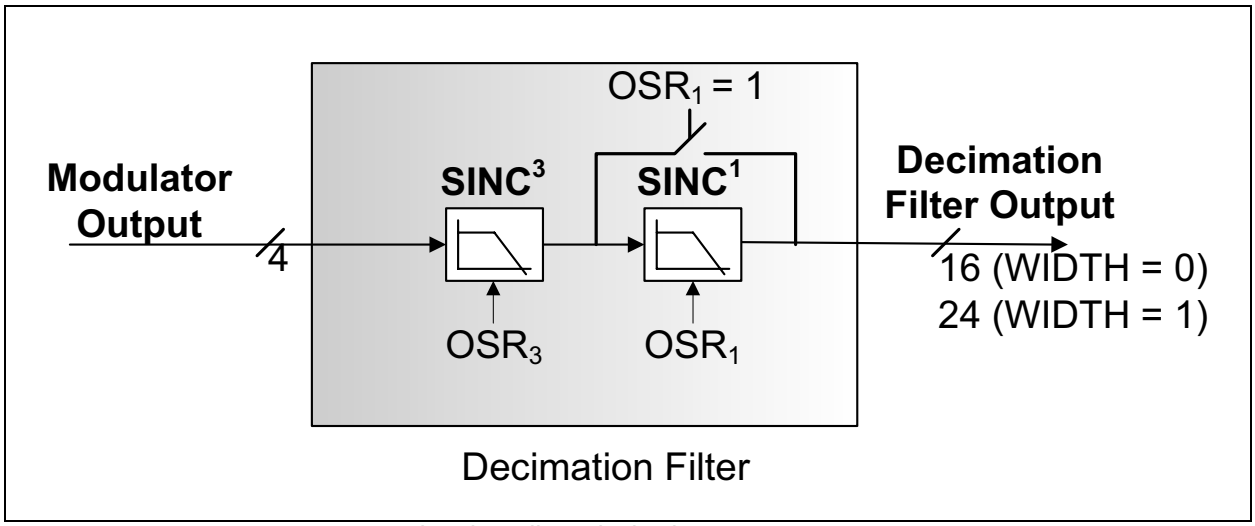

FIGURE 5-2: *MCP3913 Decimation Filter Block Diagram.*

Equation 5-1 calculates the filter z-domain transfer function.

EQUATION 5-1: SINC FILTER TRANSFER FUNCTION

$$H(z) = \frac{\left(1 - z^{-OSR_3}\right)^3}{\left(OSR_3(1 - z^{-1})\right)^3} \times \frac{\left(1 - z^{-OSR_1 \times OSR_3}\right)}{OSR_1 \times \left(1 - z^{-OSR_3}\right)}$$

$$Where\ z = EXP((2\pi \cdot j \cdot f_{in}) / (DMCLK))$$

Equation 5-2 calculates the settling time of the ADC as a function of DMCLK periods.

EQUATION 5-2:

$$SettlingTime(DMCLKperiods) = 3 \times OSR_3 + (OSR_1 - 1) \times OSR_3$$

The SINC^1 filter following the SINC^3 filter is only enabled for the high OSR settings (OSR > 512). This SINC^1 filter provides additional rejection at a low cost with little modification to the -3 dB bandwidth. The resolution (number of possible output codes expressed in powers of two or in bits) of the digital filter is 24-bit maximum for any OSR and data format choice. The resolution depends only on the OSR[2:0] bits setting in the CONFIG0 register per Table 5-3. Once the OSR is chosen, the resolution is fixed and the output code respects the data format defined by the WIDTH_DATA[1:0] bits setting in the STATUSCOM register (see **Section 5.5 "ADC Output Coding"**).

The gain of the transfer function of this filter is one at each multiple of DMCLK (typically 1 MHz), so a proper anti-aliasing filter must be placed at the inputs. This will attenuate the frequency content around DMCLK and keep the desired accuracy over the baseband of the converter. This anti-aliasing filter can be a simple, first-order RC network, with a sufficiently low time constant to generate high rejection at the DMCLK frequency.

Any unsettled data are automatically discarded to avoid data corruption. Each data ready pulse corresponds to fully settled data at the output of the decimation filter. The first data available at the output of the decimation filter are present after the complete settling time of the filter (see Table 5-3). After the first data have been processed, the delay between two data ready pulses coming from the same ADC channel is one DRCLK period. The data stream from input to output is delayed by an amount equal to the settling time of the filter (which is the group delay of the filter).

The achievable resolution, the -3 dB bandwidth and the settling time at the output of the decimation filter (the output of the ADC) are dependent on the OSR of each SINC filter, and are summarized in Table 5-3.

TABLE 5-3: OVERSAMPLING RATIO AND SINC FILTER SETTLING TIME

OSR[2:0]			OSR_3	OSR_1	Total OSR	Resolution in Bits (No Missing Code)	Settling Time	-3 dB Bandwidth
0	0	0	32	1	32	17	96/DMCLK	0.26 * DRCLK
0	0	1	64	1	64	20	192/DMCLK	0.26 * DRCLK
0	1	0	128	1	128	23	384/DMCLK	0.26 * DRCLK
0	1	1	256	1	256	24	768/DMCLK	0.26 * DRCLK
1	0	0	512	1	512	24	1536/DMCLK	0.26 * DRCLK
1	0	1	512	2	1024	24	2048/DMCLK	0.37 * DRCLK
1	1	0	512	4	2048	24	3072/DMCLK	0.42 * DRCLK
1	1	1	512	8	4096	24	5120/DMCLK	0.43 * DRCLK

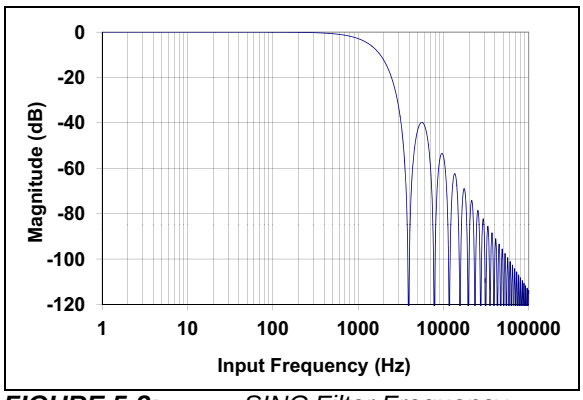

FIGURE 5-3: *SINC Filter Frequency Response, OSR = 256, MCLK = 4 MHz, PRE[1:0] = 00.*

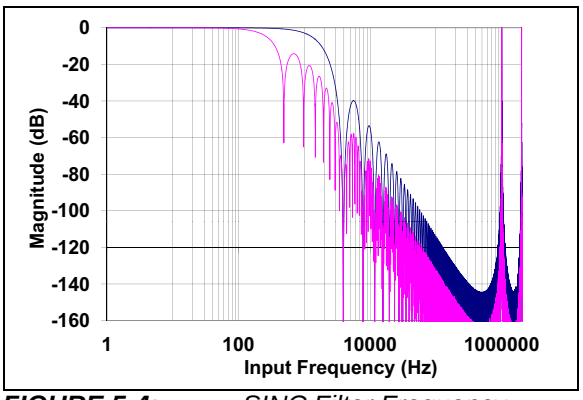

FIGURE 5-4: *SINC Filter Frequency Response, OSR = 4096 (in pink), OSR = 512 (in blue), MCLK = 4 MHz, PRE[1:0] = 00.*

© 2013-2020 Microchip Technology Inc.

5.5 ADC Output Coding

The second-order modulator, $SINC^3$ + $SINC^1$ filter, PGA, V_{REF} and the analog input structure all work together to produce the device transfer function for the Analog-to-Digital conversion (see Equation 5-3).

Each channel data are calculated on 24-bit (23-bit plus sign) and coded in two's complement format, MSB first. The output format can then be modified by the WIDTH_DATA[1:0] settings in the STATUSCOM register to allow 16-/24-/32-bit format compatibility (see **Section 8.6 "STATUSCOM Register – Status and Communication Register"** for more information).

In case of positive saturation (CHn+ – CHn- > V_{REF}/1.5), the output is locked to 7FFFFF for 24-bit mode. In case of negative saturation (CHn+ – CHn- < -V_{REF}/1.5), the output code is locked to 800000 for 24-bit mode.

Equation 5-3 is only true for DC inputs. For AC inputs, this transfer function needs to be multiplied by the transfer function of the $SINC^3$ + $SINC^1$ filter (see Equation 5-1 and Equation 5-3).

EQUATION 5-3:

$$DATA_CHn = \left(\frac{(CHn+ - CHn-)}{V_{REF}+ - V_{REF}-}\right) \times 8{,}388{,}608 \times G \times 1.5$$

For 24-Bit Mode, WIDTH_Data[1:0] = 01 (Default)

For other than the default 24-bit data formats, Equation 5-3 should be multiplied by a scaling factor, depending on the data format used (defined by WIDTH_DATA[1:0]). The data format and associated scaling factors are given in Figure 5-5.

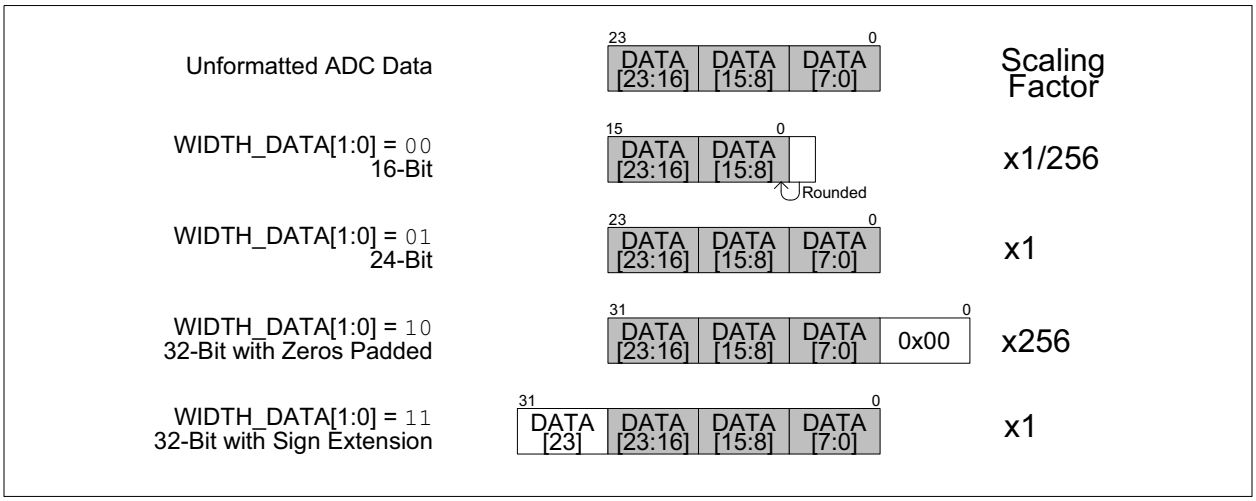

FIGURE 5-5: *Output Data Formats.*

The ADC resolution is a function of the OSR (**Section 5.4 "SINC^3 + SINC^1 Filter"**). The resolution is the same for all channels. No matter what the resolution is, the ADC output data are always calculated in 24-bit words, with added zeros at the end if the OSR is not large enough to produce 24-bit resolution (left justification).

TABLE 5-4: OSR = 256 (AND HIGHER) OUTPUT CODE EXAMPLES

ADC Output Code (MSB First)	Hexadecimal	Decimal, 24-Bit Resolution
0 1 1 1 1 1 1 1 1 1 1 1 1 1 1 1 1 1 1 1 1 1 1 1	0x7FFFFF	+ 8,388,607
0 1 1 1 1 1 1 1 1 1 1 1 1 1 1 1 1 1 1 1 1 1 1 0	0x7FFFFE	+ 8,388,606
0 0 0 0 0 0 0 0 0 0 0 0 0 0 0 0 0 0 0 0 0 0 0 0	0x000000	0
1 1 1 1 1 1 1 1 1 1 1 1 1 1 1 1 1 1 1 1 1 1 1 1	0xFFFFFF	– 1
1 0 0 0 0 0 0 0 0 0 0 0 0 0 0 0 0 0 0 0 0 0 0 1	0x800001	– 8,388,607
1 0 0 0 0 0 0 0 0 0 0 0 0 0 0 0 0 0 0 0 0 0 0 0	0x800000	– 8,388,608

TABLE 5-5: OSR = 128 OUTPUT CODE EXAMPLES

ADC Output Code (MSB First)	Hexadecimal	Decimal, 23-Bit Resolution
0 1 1 1 1 1 1 1 1 1 1 1 1 1 1 1 1 1 1 1 1 1 1 0	0x7FFFFE	+ 4,194,303
0 1 1 1 1 1 1 1 1 1 1 1 1 1 1 0 1 1 1 1 1 1 0 0	0x7FFFFC	+ 4,194,302
0 0 0 0 0 0 0 0 0 0 0 0 0 0 0 0 0 0 0 0 0 0 0 0	0x000000	0
1 1 1 1 1 1 1 1 1 1 1 1 1 1 1 1 1 1 1 1 1 1 1 0	0xFFFFFE	– 1
1 0 0 0 0 0 0 0 0 0 0 0 0 0 0 0 0 0 0 0 0 0 1 0	0x800002	– 4,194,303
1 0 0 0 0 0 0 0 0 0 0 0 0 0 0 0 0 0 0 0 0 0 0 0	0x800000	– 4,194,304

TABLE 5-6: OSR = 64 OUTPUT CODE EXAMPLES

ADC Output Code (MSB First)	Hexadecimal	Decimal, 20-Bit Resolution
0 1 1 1 1 1 1 1 1 1 1 1 1 1 1 1 1 1 1 1 0 0 0 0	0x7FFFF0	+ 524, 287
0 1 1 1 1 1 1 1 1 1 1 1 1 1 1 1 1 1 1 0 0 0 0 0	0x7FFFE0	+ 524, 286
0 0 0 0 0 0 0 0 0 0 0 0 0 0 0 0 0 0 0 0 0 0 0 0	0x000000	0
1 1 1 1 1 1 1 1 1 1 1 1 1 1 1 1 1 1 1 1 0 0 0 0	0xFFFFF0	– 1
1 0 0 0 0 0 0 0 0 0 0 0 0 0 0 0 0 0 0 1 0 0 0 0	0x800010	– 524,287
1 0 0 0 0 0 0 0 0 0 0 0 0 0 0 0 0 0 0 0 0 0 0 0	0x800000	– 524, 288

TABLE 5-7: OSR = 32 OUTPUT CODE EXAMPLES

ADC Output Code (MSB First)	Hexadecimal	Decimal, 17-Bit Resolution
0 1 1 1 1 1 1 1 1 1 1 1 1 1 1 1 1 0 0 0 0 0 0 0	0x7FFF80	+ 65, 535
0 1 1 1 1 1 1 1 1 1 1 1 1 1 1 1 0 0 0 0 0 0 0 0	0x7FFF00	+ 65, 534
0 0 0 0 0 0 0 0 0 0 0 0 0 0 0 0 0 0 0 0 0 0 0 0	0x000000	0
1 1 1 1 1 1 1 1 1 1 1 1 1 1 1 1 1 0 0 0 0 0 0 0	0xFFFF80	– 1
1 0 0 0 0 0 0 0 0 0 0 0 0 0 0 0 1 0 0 0 0 0 0 0	0x800080	– 65,535
1 0 0 0 0 0 0 0 0 0 0 0 0 0 0 0 0 0 0 0 0 0 0 0	0x800000	– 65, 536

© 2013-2020 Microchip Technology Inc.

5.6 Voltage Reference

5.6.1 INTERNAL VOLTAGE REFERENCE

The MCP3913 contains an internal voltage reference source specially designed to minimize drift over temperature. In order to enable the internal voltage reference, the VREFEXT bit in the Configuration register must be set to '0' (Default mode). This internal V_{REF} supplies reference voltage to all channels. The typical value of this voltage reference is 1.2V, ±2%. The internal reference has a very low typical temperature coefficient of ±7 ppm/°C, allowing the output to have minimal variation with respect to temperature, since they are proportional to ($1/V_{REF}$).

The noise of the internal voltage reference is low enough not to significantly degrade the SNR of the ADC if compared to a precision external low noise voltage reference. The output pin for the internal voltage reference is REFIN+/OUT.

If the voltage reference is only used as an internal V_{REF}, adding bypass capacitance on REFIN+/OUT is not necessary for keeping ADC accuracy, but a minimal 0.1 µF ceramic capacitance can be connected to avoid EMI/EMC susceptibility issues due to the antenna created by the REFIN+/OUT pin, if left floating.

The bypass capacitors also help applications where the voltage reference output is connected to other circuits. In this case, additional buffering may be needed since the output drive capability of this output is low.

Adding too much capacitance on the REFIN+/OUT pin may slightly degrade the THD performance of the ADCs.

5.6.2 DIFFERENTIAL EXTERNAL VOLTAGE INPUTS

When the VREFEXT bit is set to '1', the two reference pins (REFIN+/OUT, REFIN-) become a differential voltage reference input. The voltage at the REFIN+/OUT is noted V_{REF}+ and the voltage at the REFIN- pin is noted V_{REF}-. The differential voltage input value is shown in Equation 5-4.

EQUATION 5-4:

$$V_{REF} = V_{REF}+ - V_{REF}-$$

The specified V_{REF} range is from 1.1V to 1.3V. The REFIN- pin voltage (V_{REF}-) should be limited to ±0.1V, with respect to A_{GND}. Typically, for single-ended reference applications, the REFIN- pin should be directly connected to A_{GND} with its own separate track to avoid any spike due to switching noise.

These buffers are injecting a certain quantity of 1/f noise into the system, noise that can be modulated with the incoming input signals and that can limit the SNR at very high OSR (OSR > 256). To overcome this limitation, these buffers include an auto-zeroing algorithm that greatly diminishes their 1/f noise, as well as their offset, so that the SNR of the system is not limited by this noise component, even at maximum OSR. This auto-zeroing algorithm is performed synchronously with the MCLK coming to the device.

5.6.3 TEMPERATURE COMPENSATION (VREFCAL[7:0])

The internal voltage reference consists of a proprietary circuit and algorithm to compensate first-order and second-order temperature coefficients. The compensation enables very low-temperature coefficients (typically 9 ppm/°C) on the entire range of temperatures, from -40°C to +125°C. This temperature coefficient varies from part to part.

This temperature coefficient can be adjusted on each part through the VREFCAL[7:0] bits present in the CONFIG0 register (bits 7 to 0). These register settings are only for advanced users. VREFCAL[7:0] should not be modified unless the user wants to calibrate the temperature coefficient of the whole system or application. The default value of this register is set to 0x50. The default value (0x50) was chosen to optimize the standard deviation of the tempco across process variation. The value can be slightly improved to around 7 ppm/°C if the VREFCAL[7:0] bits are written at 0x50, but this setting degrades the standard deviation of the V_{REF} tempco. The typical variation of the temperature coefficient of the internal voltage reference, with respect to the VREFCAL register code, is shown in Figure 5-6. Modifying the value stored in the VREFCAL[7:0] bits may also vary the voltage reference, in addition to the temperature coefficient.

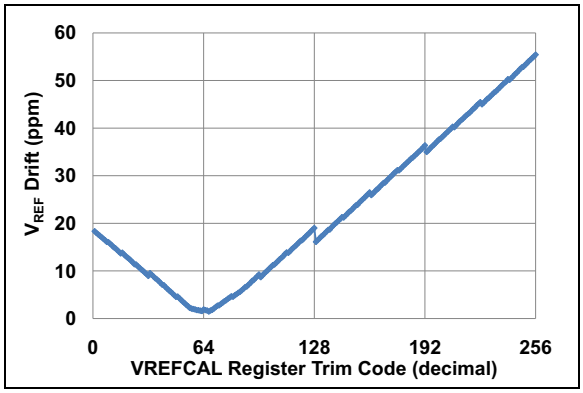

FIGURE 5-6: *V_{REF} Tempco vs. VREFCAL Trim Code Chart.*

5.6.4 VOLTAGE REFERENCE BUFFERS

Each channel includes a voltage reference buffer tied to the REFIN+/OUT pin, which allows the internal capacitors to properly charge with the voltage reference signals, even in the case of an external voltage reference connection with weak load regulation specifications. This ensures that the correct amount of current is sourced to each channel to ensure their accuracy specifications and diminishes the constraints on the voltage reference load regulation.

5.7 Power-on Reset

The MCP3913 contains an internal POR circuit that monitors both analog and digital supply voltages during operation. The typical threshold for a power-up event detection is 2.0V, ±10% and a typical start-up time (t_{POR}) of 50 µs. The POR circuit has a built-in hysteresis for improved transient spike immunity that has a typical value of 200 mV. Proper decoupling capacitors (0.1 µF in parallel with 10 µF) should be mounted as close as possible to the AV_{DD} and DV_{DD} pins, providing additional transient immunity.

Figure 5-7 illustrates the different conditions at a power-up and a power-down event in typical conditions. All internal DC biases are not settled until at least 1 ms in worst-case conditions after a system POR. Any data ready pulse occurring within 1 ms, plus the SINC filter settling time after system Reset, should be ignored to ensure proper accuracy. After POR, data ready pulses are present at the pin with all the default conditions in the Configuration registers.

Both AV_{DD} and DV_{DD} are monitored, so either power supply can sequence first.

Note: In order to ensure a proper power-up sequence, the ramp rate of DV_{DD} should not exceed 3V/µs when coming out of the POR state.

Additionally, the user should try to lower the DV_{DD} residual voltage as close to 0V as possible when the device is kept in a POR state (below DV_{DD} POR threshold) for a long time to ensure a proper power-up sequence. The user can verify if the power-up sequence has been correctly performed by reading the default state of all the registers in the register map right after powering up the device. If one or more of the registers do not show the proper default settings when being read, a new power-up cycle should be launched to recover from this condition.

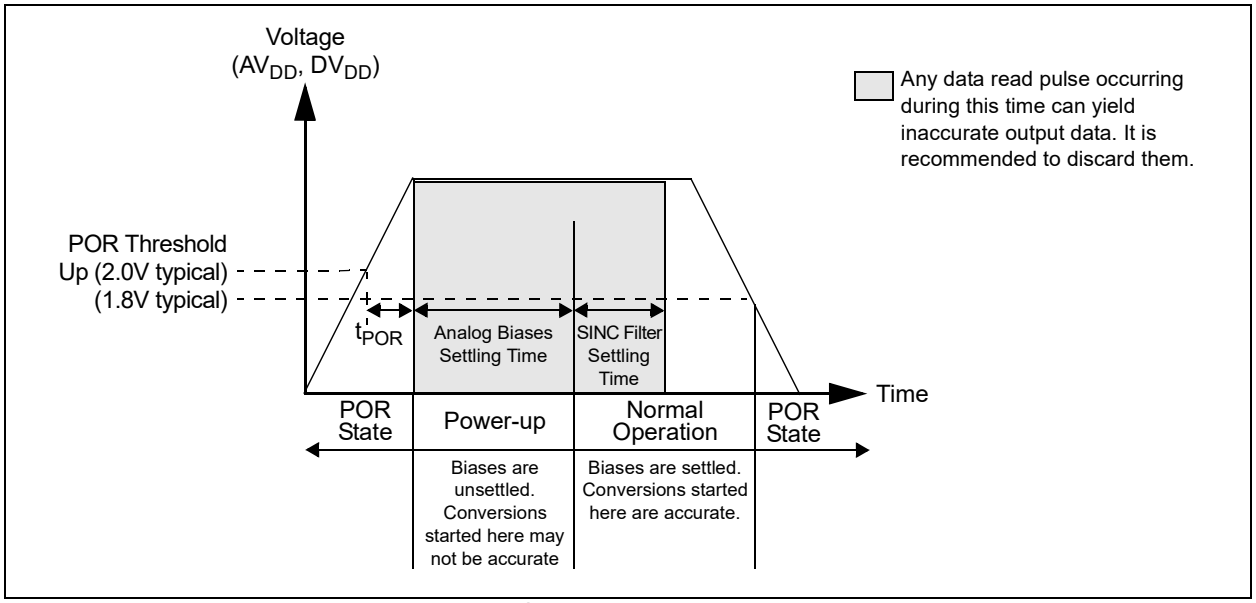

FIGURE 5-7: *Power-on Reset Operation.*

© 2013-2020 Microchip Technology Inc.

5.8 Hard Reset Effect on Delta-Sigma Modulator/SINC Filter

When the $\overline{\text{RESET}}$ pin is logic low, all ADCs will be in Reset and output code: 0x000000h. The $\overline{\text{RESET}}$ pin performs a Hard Reset (DC biases are still on, the part is ready to convert) and clears all charges contained in the Delta-Sigma modulators. The comparator's output is '0011' for each ADC.

The SINC filters are all reset, as well as their double-output buffers. This pin is independent of the serial interface. It brings all the registers to the default state. When $\overline{\text{RESET}}$ is logic low, any write with the SPI interface will be disabled and will have no effect. All output pins (SDO, $\overline{\text{DR}}$) are high-impedance.

If an external clock (MCLK) is applied, the input structure is enabled and is properly biasing the substrate of the input transistors. In this case, the leakage current on the analog inputs is low if the analog input voltages are kept between -1V and +1V.

If MCLK is not applied when in Reset mode, the leakage can be high if the analog inputs are below -0.6V, as referred to A_{GND}.

5.9 Phase Delay Block

The MCP3913 incorporates a phase delay generator, which ensures that each pair of ADCs (CH0/1, CH2/3, CH4/5) are converting the inputs with a fixed delay between them. The six ADCs are synchronously sampling, but the averaging of modulator outputs is delayed so that the SINC filter outputs (thus the ADC outputs) show a fixed phase delay as determined by the PHASE0/1 register setting. The odd channels (CH1,3,5) are the reference channels for the phase delays of each pair; they set the time reference. Typically, these channels can be the voltage channels for a polyphase energy metering application. These odd channels are synchronous at all times, so they become ready and output a data ready pulse at the same time. The even channels (CH0/2/4) are delayed compared to the time reference (CH1/3/5) by a fixed amount of time defined for each pair channel in the PHASE0/1 registers.

The two PHASE0/1 registers are split into three 12-bit banks that represent the delay between each pair of channels. The equivalence is defined in Table 5-8. Each phase value (PHASEA/B/C) represents the delay of the even channel, with respect to the associated odd channel, with an 11-bit plus sign, MSB first, two's complement code. This code indicates how many DMCLK periods there are between each channel in the pair. (see Equation 5-5). Since the odd channels are the time reference when PHASEX[11:0] are positive, the even channel of the pair is lagging and the odd channel is leading. When PHASEX[11:0] are negative, the even channel of the pair is leading and the odd channel is lagging.

TABLE 5-8: PHASE DELAYS EQUIVALENCE

Pair of Channels	Phase Bank	Register Map Position
CH1/CH0	PHASEA[11:0]	PHASE1[11:0]
CH3/CH2	PHASEB[11:0]	PHASE1[23:12]
CH5/CH4	PHASEC[11:0]	PHASE0[11:0]

EQUATION 5-5:

$$Total\ Delay = \frac{PHASEx[11:0]\ Decimal\ Code}{DMCLK}$$

Where: x = A/B/C

The timing resolution of the phase delay is 1/DMCLK or 1 µs in the default configuration, with MCLK = 4 MHz.

Given the definition of DMCLK, the phase delay is affected by a change in the prescaler settings (PRE[1:0]) and the MCLK frequency.

The data ready signals are affected by the phase delay settings. Typically, the time difference between the data ready pulses of odd and even channels is equal to the associated phase delay setting.

Each ADC conversion start, and therefore, each data ready pulse is delayed by a timing of OSR/2 x DMCLK periods (equal to half a DRCLK period). This timing allows for the odd channel's data ready signals to be located at a fixed time reference (OSR/2 x DMCLK periods from the Reset), while the even channel can be leading or lagging around this time reference with the corresponding PHASEX[11:0] delay value.

Note: For a detailed explanation of the Data Ready pin ($\overline{\text{DR}}$) with phase delay, see Figure 5.11.

5.9.1 PHASE DELAY LIMITS

The limits of the phase delays are determined by the OSR settings; the phase delays can only go from -OSR/2 to +OSR/2-1 DMCLK periods.

If larger delays between the two channels are needed, they can be implemented externally to the chip with an MCU. A FIFO in the MCU can save incoming data from the leading channel for a number N of DRCLK clocks. In this case, DRCLK would represent the coarse timing resolution and DMCLK the fine timing resolution. The total delay will then be equal to:

EQUATION 5-6:

$$Total\ Delay = N/DRCLK + PHASE/DMCLK$$

Note: Rewriting the PHASE registers with the same value automatically resets and restarts all ADCs.

The Phase Delay registers can be programmed once with the OSR = 4096 setting and will adjust the OSR automatically afterwards without the need to change the value of the PHASE registers.

- **OSR = 4096**: The delay can go from -2048 to +2047. PHASEX[11] is the sign bit. PHASEX[10] is the MSB and PHASEX[0] the LSB.
- **OSR = 2048**: The delay can go from -1024 to +1023. PHASEX[10] is the sign bit. PHASEX[9] is the MSB and PHASEX[0] the LSB.
- **OSR = 1024**: The delay can go from -512 to +511. PHASEX[9] is the sign bit. PHASEX[8] is the MSB and PHASEX[0] the LSB.
- **OSR = 512**: The delay can go from -256 to +255 PHASEX[8] is the sign bit. PHASEX[7] is the MSB and PHASEX[0] the LSB.
- **OSR = 256**: The delay can go from -128 to +127. PHASEX[7] is the sign bit. PHASEX[6] is the MSB and PHASEX[0] the LSB.
- **OSR = 128:** The delay can go from -64 to +63. PHASEX[6] is the sign bit. PHASEX[5] is the MSB and PHASEX[0] the LSB.
- **OSR = 64:** The delay can go from -32 to +31. PHASEX[5] is the sign bit. PHASEX[4] is the MSB and PHASEX[0] the LSB.
- **OSR = 32:** The delay can go from -16 to +15. PHASEX[4] is the sign bit. PHASEX[3] is the MSB and PHASEX[0] the LSB.

TABLE 5-9: PHASE VALUES WITH MCLK = 4 MHz, OSR = 4096, PRE[1:0] = 00

PHASEX[11:0] for the Channel Pair CH[n/n+1]												Hex	Delay (CH[n] relative to CH[n+1])
0	1	1	1	1	1	1	1	1	1	1	1	0x7FF	+ 2047 µs
0	1	1	1	1	1	1	1	1	1	1	0	0x7FE	+ 2046 µs
0	0	0	0	0	0	0	0	0	0	0	1	0x001	+ 1 µs
0	0	0	0	0	0	0	0	0	0	0	0	0x000	0 µs
1	1	1	1	1	1	1	1	1	1	1	1	0xFFF	– 1 µs
1	0	0	0	0	0	0	0	0	0	0	1	0x801	– 2047 µs
1	0	0	0	0	0	0	0	0	0	0	0	0x800	– 2048 µs

5.10 Data Ready Link

There are two modes defined with the DR_LINK bit in the STATUSCOM register that control the data ready pulses. The position of the data ready pulses varies with respect to this mode, to the OSR[2:0] and to the PHASE0/1 register settings. **Section 5.11 "Data Ready Status Bits"** represents the behavior of the Data Ready pin with the two DR_LINK configurations.

- DR_LINK = 0: Data ready pulses from all enabled channels are output on the $\overline{DR}$ pin.
- DR_LINK = 1 (Recommended and Default mode): Only the data ready pulses from the most lagging ADC between all the active ADCs are present on the $\overline{DR}$ pin.

The lagging ADC data ready position depends on the PHASE0/1 registers, the PRE[1:0] and the OSR[2:0] bits settings. In this mode, the active ADCs are linked together, so their data are latched together when the lagging ADC output is ready. For power metering applications, DR_LINK = 1 is recommended (Default mode); it allows the host MCU to gather all channels synchronously within a unique interrupt pulse and it ensures that all channels have been latched at the same time, so that no data corruption is happening.

© 2013-2020 Microchip Technology Inc.

5.11 Data Ready Status Bits

In addition to the Data Ready pin indicator, the MCP3913 device includes a separate data ready status bit for each channel. Each ADC channel CHn is associated to the corresponding DRSTATUS[n] that can be read at all times in the STATUSCOM register. These status bits can be used to synchronize the data retrieval in case the $\overline{DR}$ pin is not connected (see **Section 6.8 "ADC Channels Latching and Synchronization"**).

The DRSTATUS[5:0] bits are not writable; writing on them has no effect. They have a default value of '1', which indicates that the data of the corresponding ADC are not ready. This means that the ADC Output register has not been updated since the last reading (or since the last Reset). The DRSTATUS bits take the '0' state once the ADC channel register is updated (which happens at a DRCLK rate). A simple read of the STATUSCOM register clears all the DRSTATUS bits to their default value ('1').

In the case of DR_LINK = 1, the DRSTATUS[5:0] bits are all updated synchronously with the most lagging channel at the same time the $\overline{DR}$ pulse is generated. In case of DR_LINK = 0, each DRSTATUS bit is updated independently and synchronously with its corresponding channel.

5.12 Crystal Oscillator

The MCP3913 includes a Pierce-type crystal oscillator with very high stability and ensures very low tempco and jitter for the clock generation. This oscillator can handle crystal frequencies up to 20 MHz, provided proper load capacitances and quartz quality factors are used. The crystal oscillator is enabled when CLKEXT = 0 in the CONFIG1 register.

For a proper start-up, the load capacitors of the crystal should be connected between OSC1 and D_{GND}, and between OSC2 and D_{GND}. They should also respect Equation 5-7.

EQUATION 5-7:

$$R_M < 1.6 \times 10^6 \times \left(\frac{1}{f \bullet C_{LOAD}}\right)^2$$

Where:

f = Crystal frequency in MHz

C_{LOAD} = Load capacitance in pF including parasitics from the PCB

R_M = Motional resistance in ohms of the quartz

When CLKEXT = 1, the crystal oscillator is bypassed by a digital buffer to allow direct clock input for an external clock (see Figure 4-1). In this case, the OSC2 pin is pulled down internally to D_{GND} and should be connected to D_{GND} externally for better EMI/EMC immunity.

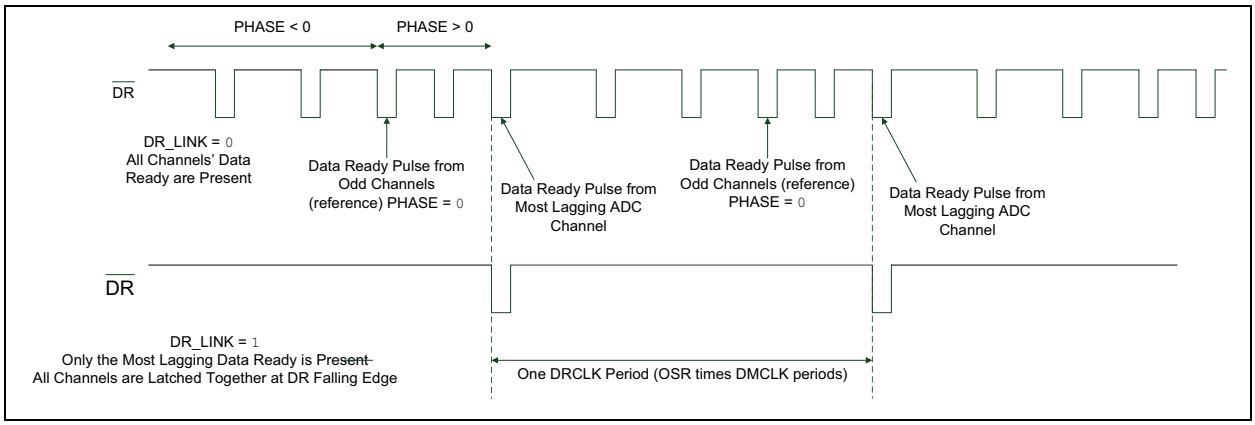

FIGURE 5-8: *DR_LINK Configurations.*

The external clock should not be higher than 20 MHz before prescaling (MCLK < 20 MHz) for proper operation.

Note: In addition to the conditions defining the maximum MCLK input frequency range, the AMCLK frequency should be maintained inferior to the maximum limits, defined in Table 5-2, to ensure the accuracy of the ADCs. If these limits are exceeded, it is recommended to choose either a larger OSR or a larger prescaler value so that AMCLK can respect these limits.

5.13 Digital System Offset and Gain Calibration Registers

The MCP3913 incorporates two sets of additional registers per channel to perform system digital offset and gain error calibration. Each channel has its own set of associated registers that will modify the output result of the channel if calibration is enabled. The gain and offset calibrations can be enabled or disabled through two CONFIG0 bits (EN_OFFCAL and EN_GAINCAL). These two bits enable or disable system calibration on all channels at the same time. When both calibrations are enabled, the output of the ADC is modified per **Section 5.13.1 "Digital Offset Error Calibration"**.

5.13.1 DIGITAL OFFSET ERROR CALIBRATION

The OFFCAL_CHn registers are 23-bit plus two's complement registers, and whose LSB value is the same as the channel ADC data. These registers are added, bit by bit, to the ADC output codes if the EN_OFFCAL bit is enabled. Enabling the EN_OFFCAL bit does not create a pipeline delay; the offset addition is instantaneous. For low OSR values, only the significant digits are added to the output (up to the resolution of the ADC; for example, at OSR = 32, only the 17 first bits are added).

The offset is not added when the corresponding channel is in Reset or Shutdown mode. The corresponding input voltage offset value added by each LSB in these 24-bit registers is:

$$OFFSET(1LSB) = V_{REF}/(PGA_CHn \times 1.5 \times 8388608)$$

This registers are a "Don't Care" if EN_OFFCAL = `0` (offset calibration disabled), but their value is not cleared by the EN_OFFCAL bit.

5.13.2 DIGITAL GAIN ERROR CALIBRATION

These registers are signed 24-bit MSB first registers coded with a range of -1x to +(1 – 2^{-23})x (from 0x800000 to 0x7FFFFF). The gain calibration adds 1x to this register and multiplies it to the output code of the channel, bit by bit, after offset calibration. The range of the gain calibration is thus from 0x to 1.9999999x (from 0x800000 to 0x7FFFFF). The LSB corresponds to a 2^{-23} increment in the multiplier.

Enabling EN_GAINCAL creates a pipeline delay of 24 DMCLK periods on all channels. All data ready pulses are delayed by 24 DMCLK periods, starting from the data ready following the command enabling the EN_GAINCAL bit. The gain calibration is effective on the next data ready following the command enabling the EN_GAINCAL bit.

The digital gain calibration does not function when the corresponding channel is in Reset or Shutdown mode. The gain multiplier value for an LSB in these 24-bit registers is:

$$GAIN\ (1\ LSB) = 1/8388608$$

This register is a "Don't Care" if EN_GAINCAL = `0` (offset calibration disabled), but its value is not cleared by the EN_GAINCAL bit.

The output data on each channel are kept to either 7FFF or 8000 (16-bit mode), or 7FFFFF or 800000 (24-bit mode) if the output results are out of bounds after all calibrations are performed.

EQUATION 5-8: DIGITAL OFFSET AND GAIN ERROR CALIBRATION REGISTERS CALCULATIONS

$$DATA_CHn(post-cal) = (DATA_CHn(pre-cal) + OFFCAL_CHn) \times (1 + GAINCAL_CHn)$$

© 2013-2020 Microchip Technology Inc.

6.0 SPI SERIAL INTERFACE DESCRIPTION

6.1 Overview

The MCP3913 device includes a four-wire ($\overline{CS}$, SCK, SDI, SDO) digital serial interface that is compatible with SPI Modes 0,0 and 1,1. Data are clocked out of the MCP3913 on the falling edge of SCK and data are clocked into the MCP3913 on the rising edge of SCK. In these modes, the SCK clock can Idle either high (1,1) or low (0,0). The digital interface is asynchronous with the MCLK clock that controls the ADC sampling and digital filtering. All the digital input pins are Schmitt triggered to avoid system noise perturbations on the communications.

Each SPI communication starts with a $\overline{CS}$ falling edge and stops with the $\overline{CS}$ rising edge. Each SPI communication is independent. When $\overline{CS}$ is logic high, SDO is in high-impedance, and transitions on SCK and SDI have no effect. Changing from an SPI Mode 1,1 to an SPI Mode 0,0 and vice versa is possible, and can be done while the $\overline{CS}$ pin is logic high. Any $\overline{CS}$ rising edge clears the communication and resets the SPI digital interface.

Additional control pins ($\overline{RESET}$, $\overline{DR}$) are also provided on separate pins for advanced communication features. The Data Ready pin ($\overline{DR}$) outputs pulses when new ADC channel data are available for reading, which can be used as an interrupt for an MCU. The Master Reset pin ($\overline{RESET}$) acts like a Hard Reset and can reset the part to its default power-up configuration (equivalent to a POR state).

The MCP3913 interface has a simple command structure. Every command is either a `READ` command from a register or a `WRITE` command to a register. The MCP3913 device includes 32 registers defined in the register map (Table 8-1). The first byte (8-bit wide) transmitted is always the control byte that defines the address of the register and the type of command (`READ` or `WRITE`). It is followed by the register itself, which can be in a 16, 24 or 32-bit format, depending on the multiple format settings defined in the STATUSCOM register. The MCP3913 is compatible with multiple formats that help reduce overhead in the data handling for most MCUs and processors available on the market (8, 16 or 32-bit MCUs) and improve MCU code compaction and efficiency.

The MCP3913 digital interface is capable of handling various continuous Read and Write modes, which allow it to perform ADC data streaming or full register map writing within only one communication (and therefore, with only one unique control byte). The internal registers can be grouped together with various configurations through the READ[1:0] and WRITE bits. The internal address counter of the serial interface can be automatically incremented, with no additional control byte needed, in order to loop through the various groups of registers within the register map. The groups are defined in Table 8-2.

The MCP3913 device also includes advanced security features. These features secure each communication, to avoid unwanted `WRITE` commands being processed to change the desired configuration and to alert the user in case of a change in the desired configuration.

Each SPI read communication can be secured through a selectable CRC-16 checksum provided on the SDO pin at the end of every communication sequence. This CRC-16 computation is compatible with the DMA CRC hardware of the PIC24 and PIC32 MCUs, resulting in no additional overhead for the added security.

For securing the entire configuration of the device, the MCP3913 includes an 8-bit lock code (LOCK[7:0]), which blocks all `WRITE` commands to the full register map if the value of the LOCK[7:0] bits are not equal to a defined password (0xA5). The user can protect its configuration by changing the LOCK[7:0] value to 0x00 after the full programming, so that any unwanted `WRITE` command will not result in a change to the configuration (because the LOCK[7:0] bits are different than the password 0xA5).

An additional CRC-16 calculation is also running continuously in the background to ensure the integrity of the full register map. All writable registers of the register map (except the MOD register) are processed through a CRC-16 calculation engine and give a CRC-16 checksum that depends on the configuration. This checksum is readable on the LOCK/CRC register and updated at all times. If a change in this checksum happens, a selectable interrupt can give a flag on the $\overline{DR}$ pin ($\overline{DR}$ pin becomes logic low) to warn the user that the configuration is corrupted.

6.2 Control Byte

The control byte of the MCP3913 contains two device Address bits (A[6:5]), five register Address bits (A[4:0]) and a Read/Write bit (R/$\overline{W}$). The first byte transmitted to the MCP3913 in any communication is always the control byte. During the control byte transfer, the SDO pin is always in a high-impedance state. The MCP3913 interface is device-addressable (through A[6:5]), so that multiple chips can be present on the same SPI bus with no data bus contention. Even if they use the same $\overline{CS}$ pin, they use a provided half-duplex SPI interface with a different address identifier. This functionality enables, for example, a serial EEPROM, such as 24AAXXX/24LCXXX or 24FCXXX and the MCP3913, to share all the SPI pins and consume less I/O pins in the application processor, since all these serial EEPROM circuits use A[6:5] = `00`.

A[6]	A[5]	A[4]	A[3]	A[2]	A[1]	A[0]	R/$\overline{W}$
Device Address		Register Address					Read/ Write

FIGURE 6-1: *Control Byte.*

The default device Address bits are A[6:5] = 01 (contact the Microchip factory for other available device Address bits). For more information, see the **Product Identification System** section. The register map is defined in Table 8-1.

6.3 Reading from the Device

The first register read on the SDO pin is the one defined by the address (A[4:0]) given in the control byte. After this first register is fully transmitted, if the $\overline{CS}$ pin is maintained logic low, the communication continues without an additional control byte and the SDO pin transmits another register with the address automatically incremented or not, depending on the READ[1:0] bits setting.

Four different Read mode configurations can be defined through the READ[1:0] bits in the STATUSCOM register for the address increment (see **Section 6.5 "Continuous Communications, Looping on Register Sets"** and Table 8-2). The data on SDO are clocked out of the MCP3913 on the falling edge of SCK. The reading format for each register is defined in **Section 6.5 "Continuous Communications, Looping on Register Sets"**.

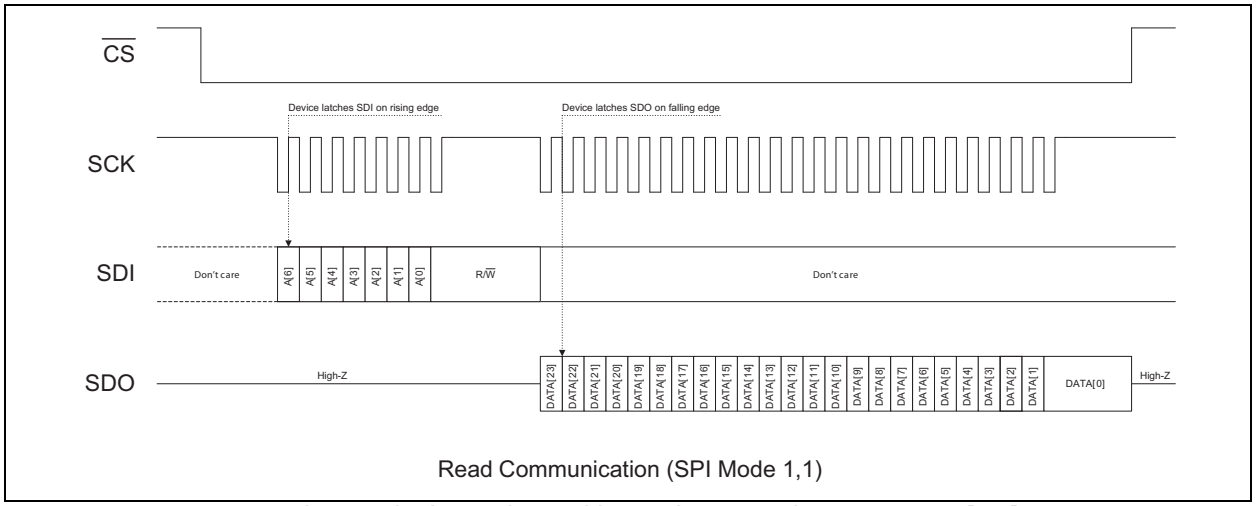

FIGURE 6-2: *Read on a Single Register with 24-Bit Format (WIDTH_DATA[1:0] = 01, SPI Mode 1,1).*

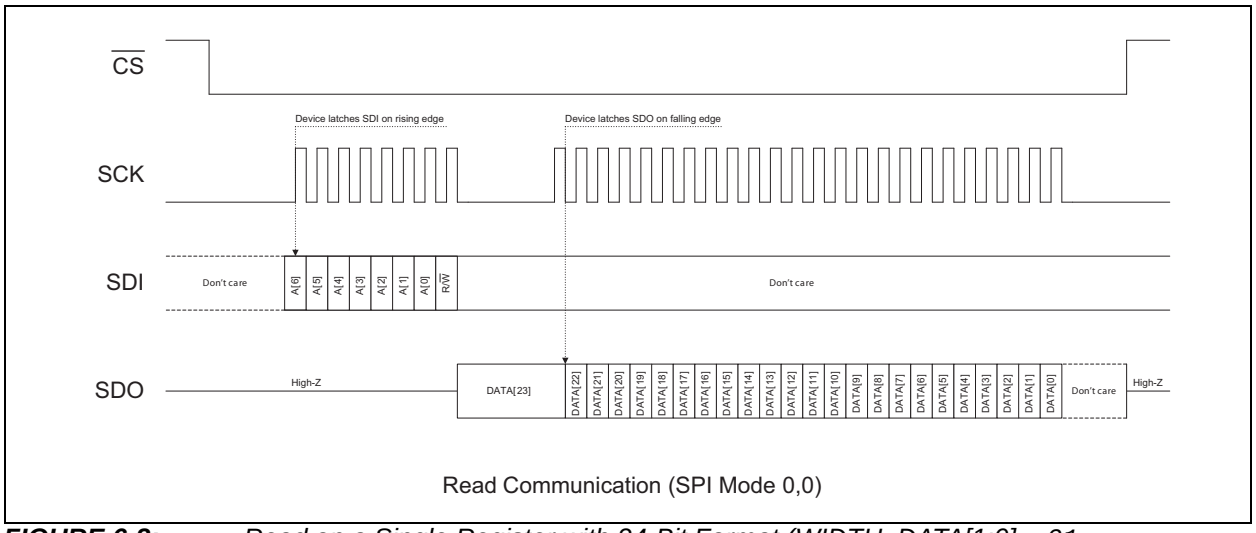

FIGURE 6-3: *Read on a Single Register with 24-Bit Format (WIDTH_DATA[1:0] = 01, SPI Mode 0,0).*

© 2013-2020 Microchip Technology Inc.

6.4 Writing to the Device

The first register written from the SDI pin to the device is the one defined by the address (A[4:0]) given in the control byte. After this first register is fully transmitted, if the $\overline{CS}$ pin is maintained logic low, the communication continues without an additional control byte and the SDI pin transmits another register with the address automatically incremented or not, depending on the WRITE bit setting.

Two different Write mode configurations for the address increment can be defined through the WRITE bit in the STATUSCOM register (see **Section 6.5, Continuous Communications, Looping on Register Sets** and Table 8-2). The SDO pin stays in a high-impedance state during a write communication. The data on SDI are clocked into the MCP3913 on the rising edge of SCK. The writing format for each register is defined in **Section 6.5, Continuous Communications, Looping on Register Sets**. A write on an undefined or non-writable address, such as the ADC channel's register addresses, will have no effect and also will not increment the address counter.

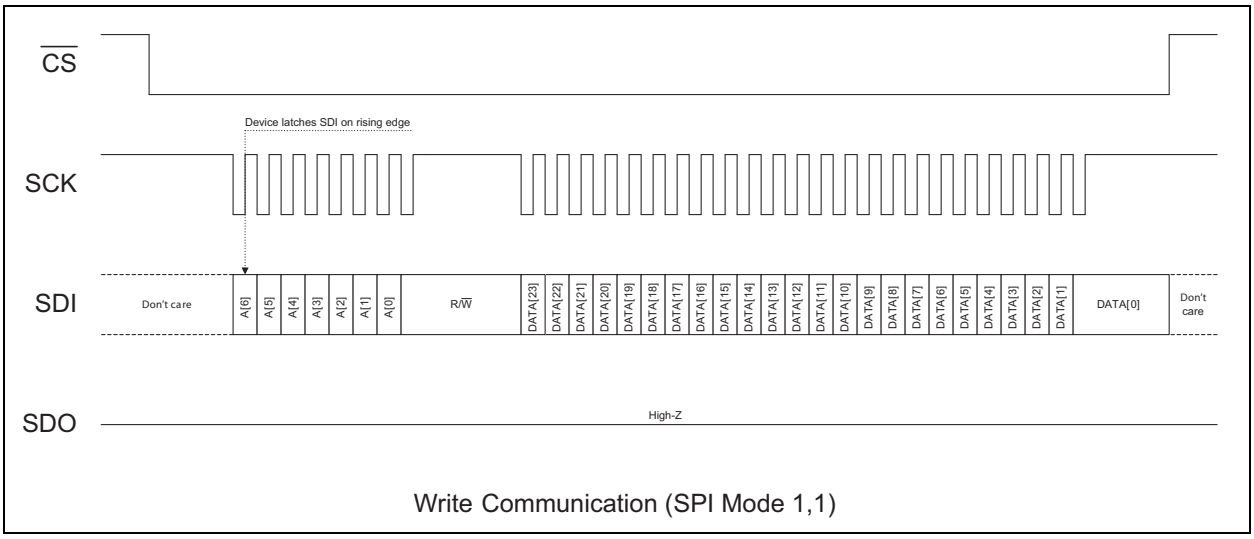

FIGURE 6-4: *Write to a Single Register with 24-Bit Format (SPI Mode 1,1).*

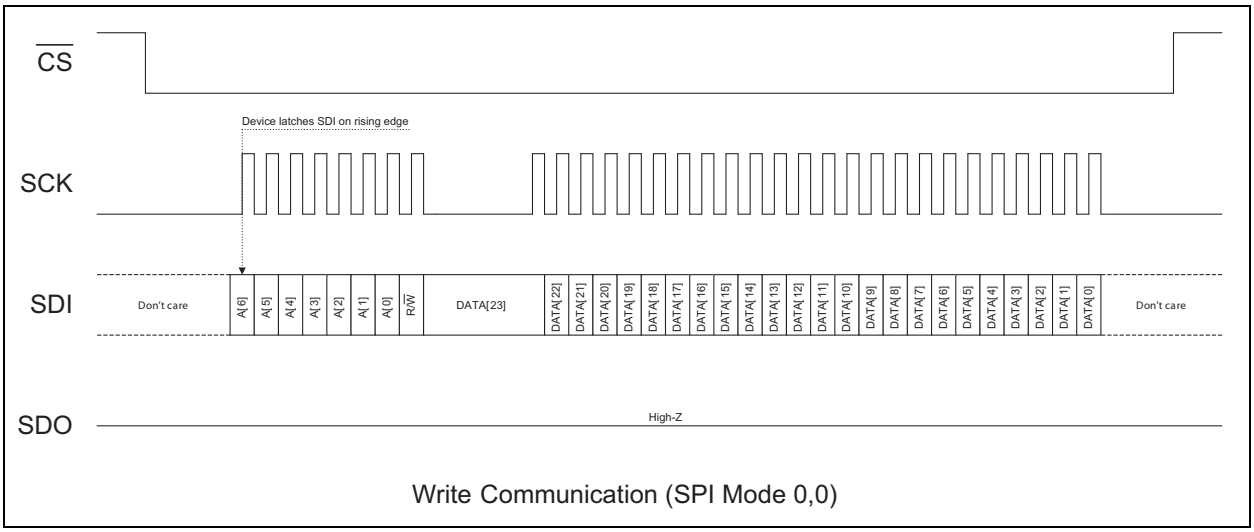

FIGURE 6-5: *Write to a Single Register with 24-Bit Format (SPI Mode 0,0).*

6.5 Continuous Communications, Looping on Register Sets

The MCP3913 digital interface can process communications in Continuous mode, without having to enter an SPI command between each read or write to a register. This feature allows the user to reduce communication overhead to the strict minimum, which diminishes EMI emissions and reduces switching noise in the system.

The registers can be grouped into multiple sets for continuous communications. The grouping of the registers in the different sets is defined by the READ[1:0] and WRITE bits that control the internal SPI Communication Address Pointer. For a graphical representation of the register map sets in function of the READ[1:0] and WRITE bits, please see Table 8-2.

In the case of a continuous communication, there is only one control byte on SDI to start the communication after a $\overline{CS}$ pin falling edge. The part stays within the same communication loop until the $\overline{CS}$ pin returns logic high. The SPI internal Register Address Pointer starts by transmitting/receiving the address defined in the control byte. After this first transmission/reception, the SPI internal Register Address Pointer automatically increments to the next available address in the register set for each transmission/reception. When it reaches the last address of the set, the communication sequence is finished. The Address Pointer automatically loops back to the first address of the defined set and restarts a new sequence with auto-increment (see Table 6-6). The internal Address Pointer automatic selection allows the following functionality:

- Read one ADC channel data, pairs of ADC channels or all ADC channels continuously
- Continuously read the entire register map
- Continuously read or write each separate register
- Continuously read or write all Configuration registers

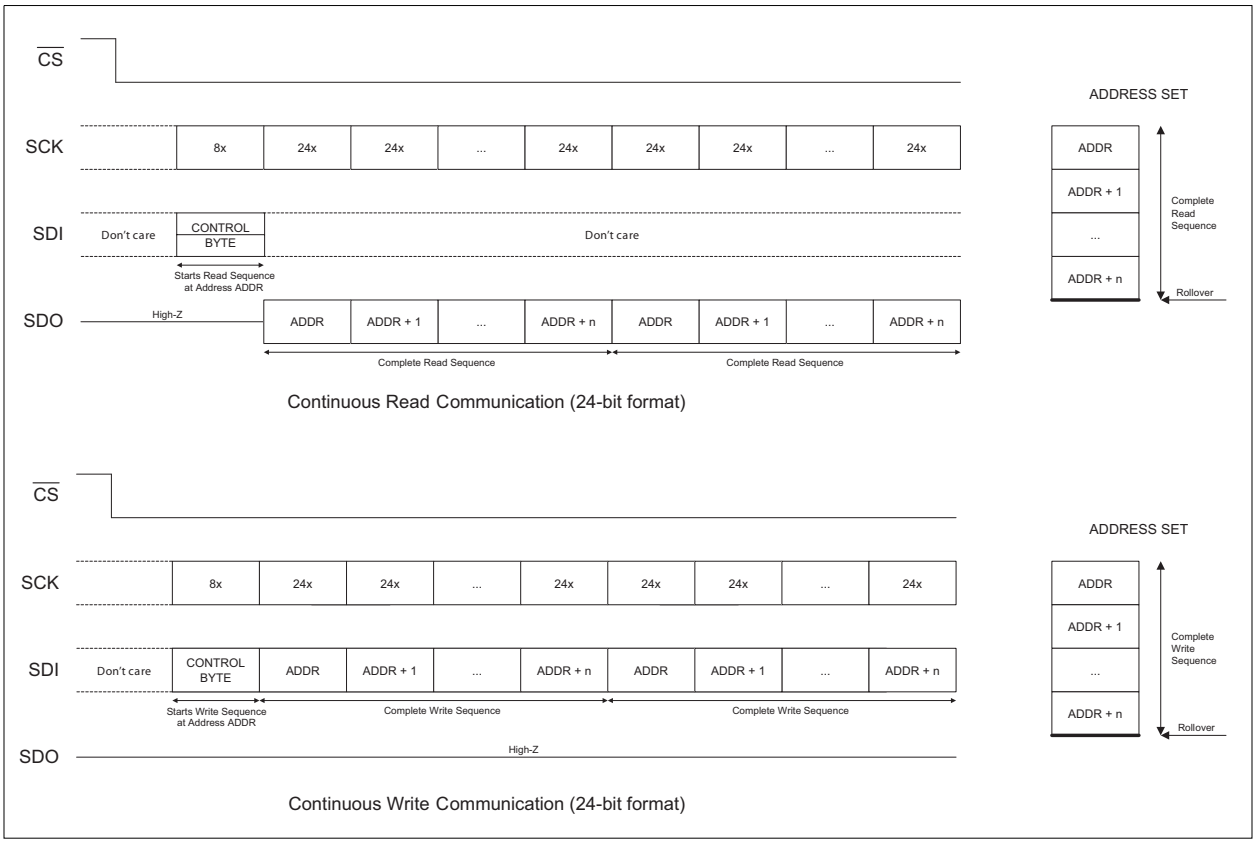

FIGURE 6-6: *Continuous Communication Sequences.*

© 2013-2020 Microchip Technology Inc.

6.5.1 CONTINUOUS READ

The STATUSCOM register contains the read communication loop settings for the internal Register Address Pointer (READ[1:0] bits). For Continuous Read modes, the address selection can take the following four values:

TABLE 6-1: ADDRESS SELECTION IN CONTINUOUS READ

READ[1:0]	Register Address Set Grouping for Continuous Read Communications
00	Static (no incrementation)
01	Groups
10	Types (default)
11	Full Register Map

Any SDI data coming after the control byte are not considered during a continuous read communication. The following figures represent a typical, continuous read communication on all six ADC channels in Types mode with the default settings (DR_LINK = 1, READ[1:0] = 10, WIDTH_DATA[1:0] = 01) in the case of the SPI Mode 0,0 (Figure 6-7) and SPI Mode 1,1 (Figure 6-8).

Note: For continuous reading of ADC data in SPI Mode 0,0 (see Figure 6-7), once the data have been completely read after a data ready, the SDO pin will take the MSB value of the previous data at the end of the reading (falling edge of the last SCK clock). If SCK stays Idle at logic low (by definition of Mode 0,0), the SDO pin will be updated at the falling edge of the next data ready pulse (synchronously with the $\overline{DR}$ pin falling edge with an output timing of t_{DODR}) with the new MSB of the data corresponding to the data ready pulse. This mechanism allows the MCP3913 to continuously read ADC data outputs seamlessly, even in SPI Mode (0,0).

In SPI Mode (1,1), the SDO pin stays in the last state (LSB of previous data) after a complete reading, which also allows seamless continuous Read mode (see Figure 6-8).

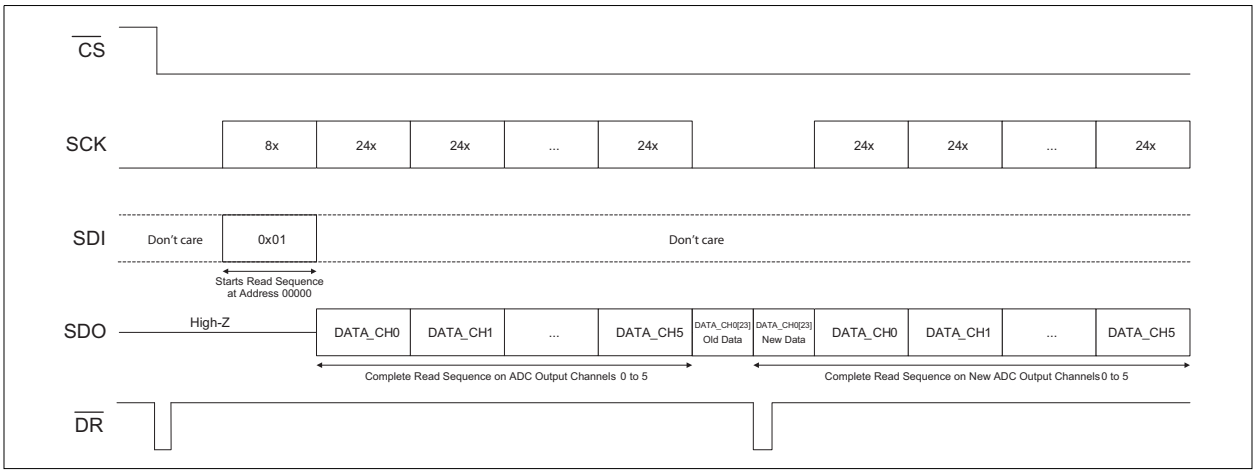

FIGURE 6-7: *Typical Continuous Read Communication (WIDTH_DATA[1:0] = 01, SPI Mode 0,0).*

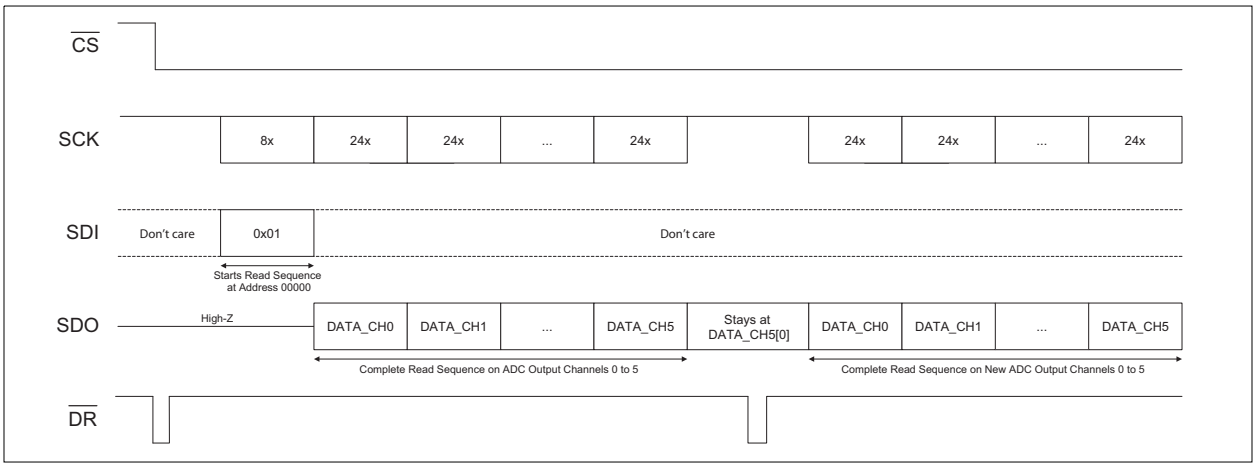

FIGURE 6-8: *Typical Continuous Read Communication (WIDTH_DATA[1:0] = 01, SPI Mode 1,1).*

6.5.2 CONTINUOUS WRITE

The STATUSCOM register contains the write loop settings for the internal Register Address Pointer (WRITE). For a continuous write, the address selection can take the following two values:

TABLE 6-2: ADDRESS SELECTION IN CONTINUOUS WRITE

WRITE	Register Address Set Grouping for Continuous Read Communications
0	Static (no incrementation)
1	Types (default)

SDO is always in a high-impedance state during a continuous write communication. Writing to a non-writable address (such as addresses 0x00 to 0x07) has no effect and does not increment the Address Pointer. In this case, the user needs to stop the communication and restart a communication with a control byte pointing to a writable address (0x08 to 0x1F).

Note: When the LOCK[7:0] bits are different than 0xA5, all the addresses, except 0x1F, become non-writable (see **Section 4.13 "MCP3913 Delta-Sigma Architecture"**).

6.6 Situations that Reset and Restart Active ADCs

Immediately after the following actions, the active ADCs (the ones not in Soft Reset or Shutdown modes) are reset and automatically restarted in order to provide proper operation:

1. Change in PHASE0/1 registers.
2. Overwrite of the same PHASE0/1 register value.
3. Change in the OSR[2:0] settings.
4. Change in the PRE[1:0] settings.
5. Change in the CLKEXT setting.
6. Change in the VREFEXT setting.

After these temporary Resets, the ADCs go back to normal operation, with no need for an additional command. Each ADC Data Output register is cleared during this process. The PHASE0/1 registers can be used to serially soft reset the ADCs, without using the RESET[5:0] bits in the Configuration register, if the same value is written in one of the PHASE0/1 registers.

6.7 Data Ready Pin ($\overline{DR}$)

To communicate when channel data are ready for transmission, the data ready signal is available on the Data Ready ($\overline{DR}$) pin at the end of a channel conversion. The Data Ready pin outputs an active-low pulse with a pulse width equal to half a DMCLK clock period. After a data ready pulse falling edge has occurred, the ADC output data are updated within the t_{DODR} timing and can then be read through SPI communication.

The first data ready pulse after a Hard or Soft Reset is located after the settling time of the SINC filter (see Table 5-3) plus the phase delay of the corresponding channel (see **Section 5.9 "Phase Delay Block"**). Each subsequent pulse is then periodic and the period is equal to a DRCLK clock period (see Equation 4-3 and Figure 1-3). The data ready pulse is always synchronous with the internal DRCLK clock.

The $\overline{DR}$ pin can be used as an interrupt pin when connected to an MCU or DSP, which will synchronize the readings of the ADC data outputs. When not active-low, this pin can either be in high-impedance (when $\overline{DR_HIZ}$ = 0) or in a defined logic high state (when $\overline{DR_HIZ}$ = 1). This is controlled through the STATUSCOM register. This allows multiple devices to share the same Data Ready pin (with a pull-up resistor connected between $\overline{DR}$ and DV_{DD}). If only the MCP3913 device is connected on the interrupt bus, the $\overline{DR}$ pin does not require a pull-up resistor, and therefore, it is recommended to use $\overline{DR_HIZ}$ = 1 configuration for such applications.

The $\overline{CS}$ pin has no effect over the $\overline{DR}$ pin, which means even if the $\overline{CS}$ pin is logic high, the data ready pulses coming from the active ADC channels will still be provided; the $\overline{DR}$ pin behavior is independent from the SPI interface. While the $\overline{RESET}$ pin is logic low, the $\overline{DR}$ pin is not active. The $\overline{DR}$ pin is latched in the logic low state when the interrupt flag on the CRCREG is present to signal that the desired registers' configuration has been corrupted (see **Section 6.11 "Detecting Configuration Change Through CRC-16 Checksum on Register Map and its Associated Interrupt Flag"**).

© 2013-2020 Microchip Technology Inc.

6.8 ADC Channels Latching and Synchronization

The ADC Channel Data Output registers (addresses 0x00 to 0x05) have a double-buffer output structure. The two sets of latches in series are triggered by the data ready signal and an internal signal indicating the beginning of a read communication sequence (read start).

The first set of latches holds each ADC Channel Data Output register when the data are ready and latches all active outputs together when DR_LINK = 1. This behavior is synchronous with the DMCLK clock.

The second set of latches ensures that when reading starts on an ADC output, the corresponding data are latched, so that no data corruption can occur within a read. This behavior is synchronous with the SCK clock. If an ADC read has started, in order to read the following ADC output, the current reading needs to be fully completed (all bits must be read on the SDO pin from the ADC Output Data registers).

Since the double-output buffer structure is triggered with two events that depend on two asynchronous clocks (data ready with DMCLK and read start with SCK), one of the three following methods on the MCU or processor should be implemented in order to synchronize the reading of the channels:

1. **Use the Data Ready pin pulses as an interrupt:** Once a falling edge occurs on the $\overline{DR}$ pin, the data are available for reading on the ADC Output registers after the t_{DODR} timing. If this timing is not respected, data corruption can occur.
2. **Use a timer clocked with MCLK as a synchronization event:** Since the Data Ready pin is synchronous with DMCLK, the user can calculate the position of the Data Ready pin depending on the PHASE0/1 registers, the OSR[2:0] and the PRE[1:0] bits settings for each channel. Again, the t_{DODR} timing needs to be added to this calculation, to avoid data corruption.
3. **Poll the DRSTATUS[5:0] bits in the STATUSCOM register:** This method consists of continuously reading the STATUSCOM register and waiting for the DRSTATUS bits to be equal to '0'. When this event happens, the user can start a new communication to read the desired ADC data. In this case, no additional timing is required.

The first method is the preferred one, as it can be used without adding additional MCU code space, but requires connecting the $\overline{DR}$ pin to an I/O pin of the MCU. The last two methods require more MCU code space and execution time, but they allow synchronized reading of the channels without connecting the $\overline{DR}$ pin, which saves one I/O pin on the MCU.

6.9 Securing Read Communications Through CRC-16 Checksum

Since power/energy metering systems can generate or receive large EMI/EMC interferences and large transient spikes, it is helpful to secure SPI communications as much as possible to maintain data integrity and desired configurations during the lifetime of the application.

The communication data on the SDO pin can be secured through the insertion of a Cyclic Redundancy Check (CRC) checksum at the end of each continuous reading sequence. The CRC checksum on communications can be enabled or disabled through the EN_CRCCOM bit in the STATUSCOM register. The CRC message ensures the integrity of the read sequence bits transmitted on the SDO pin, and the CRC checksum is inserted in between each read sequence (see Figure 6-9).

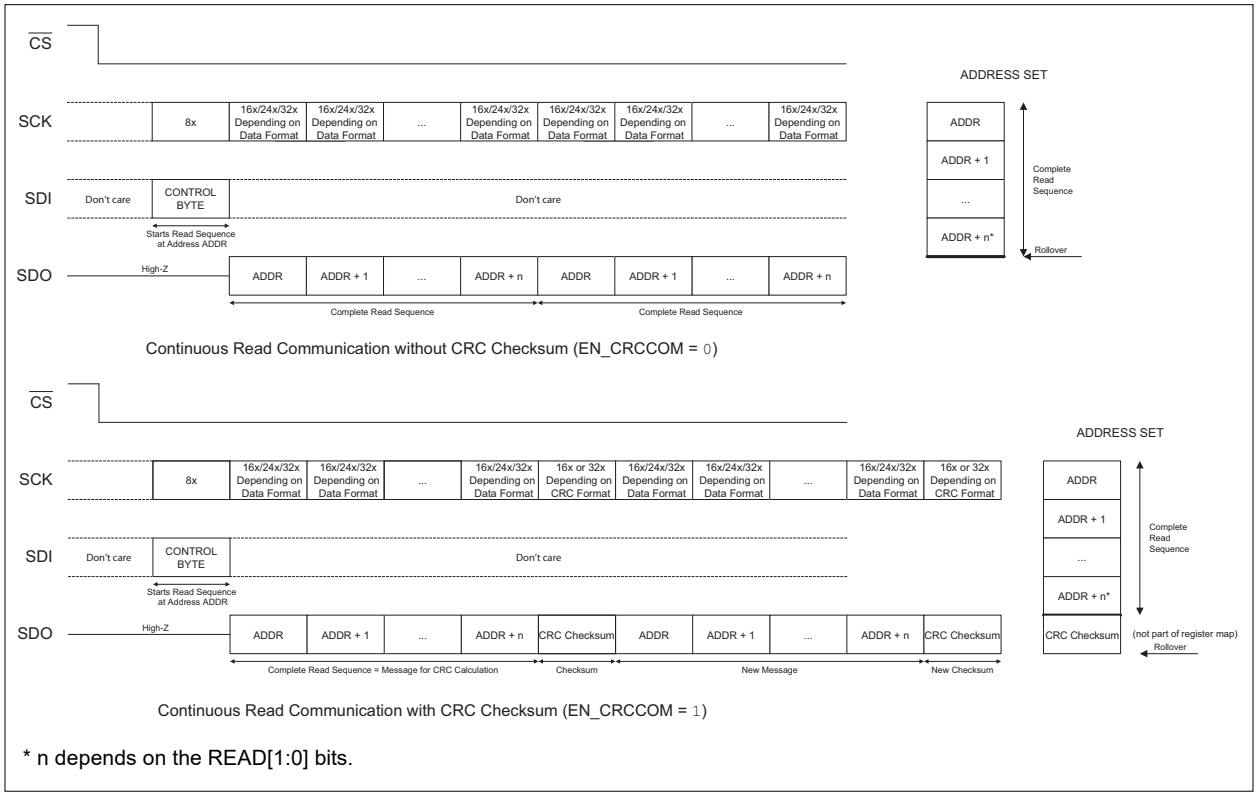

FIGURE 6-9: *Continuous Read Sequences with and without CRC Checksum Enabled.*

The CRC checksum in the MCP3913 device uses the 16-bit CRC-16 ANSI polynomial, as defined in the IEEE 802.3 standard: $x^{16} + x^{15} + x^2 + 1$. This polynomial can also be noted as 0x8005. CRC-16 detects all single and double-bit errors, all errors with an odd number of bits, all burst errors of length 16 or less and most errors for longer bursts. This allows an excellent coverage of the SPI communication errors that can happen in the system, and heavily reduces the risk of a miscommunication, even under noisy environments.

The CRC-16 format displayed on the SDO pin depends on the WIDTH_CRC bit in the STATUSCOM register (see Figure 6-10). It can be either 16-bit or 32-bit format, to be compatible with both 16-bit and 32-bit MCUs. The CRCCOM[15:0] bits, calculated by the MCP3913 device, are not dependent on the format (the device always calculates only a 16-bit CRC checksum). If a 32-bit MCU is used in the application, it is recommended to use 32-bit formats (WIDTH_CRC = 1) only.

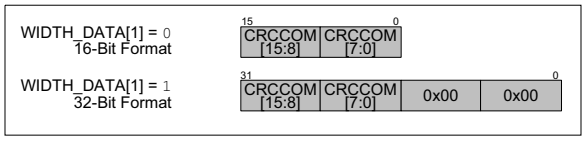

FIGURE 6-10: *CRC Checksum Format.*

The CRC calculation computed by the MCP3913 device is fully compatible with CRC hardware contained in the Direct Memory Access (DMA) of the PIC24 and PIC32 MCU product lines. The CRC message that should be considered in the PIC® device DMA is the concatenation of the read sequence and its associated checksum. When the DMA CRC hardware computes this extended message, the resulted checksum should be 0x0000. Any other result indicates that a miscommunication has happened and that the current communication sequence should be stopped and restarted.

Note:	The CRC will be generated only at the end of the selected address set, before the rollover of the Address Pointer occurs (see Figure 6-9).

© 2013-2020 Microchip Technology Inc.

6.10 Locking/Unlocking Register Map Write Access

The MCP3913 digital interface includes an advanced security feature that permits locking or unlocking the register map write access. This feature prevents the miscommunications that can corrupt the desired configuration of the device, especially an SPI read becoming an SPI write because of the noisy environment.

The last register address of the register map (0x1F: LOCK/CRC) contains the LOCK[7:0] bits. If these bits are equal to the password value (which is equal to the default value of 0xA5), the register map write access is not locked. Any write can take place and the communications are not protected.

When the LOCK[7:0] bits are different than 0xA5, the register map write access is locked. The register map, and therefore, the full device configuration, is write-protected. Any write to an address other than 0x1F will yield no result. All the register addresses, except the address 0x1F, become read-only. In this case, if the user wants to change the configuration, the LOCK[7:0] bits have to be reprogrammed back to 0xA5 before sending the desired `WRITE` command.

The LOCK[7:0] bits are located in the last register, so the user can program the whole register map, starting from 0x09 to 0x1E, within one continuous write sequence and then lock the configuration at the end of the sequence by writing all zeros in the address 0x1F, for example.

6.11 Detecting Configuration Change Through CRC-16 Checksum on Register Map and its Associated Interrupt Flag

In order to prevent internal corruption of the register and to provide additional security on the register map configuration, the MCP3913 device includes an automatic and continuous CRC checksum calculation on the full register map Configuration bits. This calculation is not the same as the communication CRC checksum described in **Section 6.9 "Securing Read Communications Through CRC-16 Checksum"**. This calculation takes the full register map as the CRC message and outputs a checksum on the CRCREG[15:0] bits located in the LOCK/CRC register (address 0x1F).

Since this feature is intended for protecting the configuration of the device, this calculation is run continuously only when the register map is locked (LOCK[7:0] bits are different than 0xA5, see **Section 6.10, Locking/Unlocking Register Map Write Access**). If the register map is unlocked, the CRCREG[15:0] bits are cleared and no CRC is calculated.

The calculation is fully completed in 21 DMCLK periods and refreshed every 21 DMCLK periods continuously. The CRCREG[15:0] bits are reset when a POR or a Hard Reset occurs. All the bits contained in the registers, from addresses 0x09-0x1F, are processed by the CRC engine to give the CRCREG[15:0] bits. The DRSTATUS[5:0] bits are set to '`1`' (default) and the CRCREG[15:0] bits are set to '`0`' (default) for this calculation engine, as they could vary during the calculation.

An interrupt flag can be enabled through the EN_INT bit in the STATUSCOM register and provided on the $\overline{DR}$ pin when the configuration has changed without a `WRITE` command being processed. This interrupt is a logic low state. This interrupt is cleared when the register map is unlocked (since the CRC calculation is not processed).

At power-up, the interrupt is not present and the register map is unlocked. As soon as the user finishes writing its configuration, the user needs to lock the register map (writing 0x00, for example, in the LOCK bits) to be able to use the interrupt flag. The CRCREG[15:0] bits will be calculated for the first time in 21 DMCLK periods. This first value will then be the reference checksum value and will be latched internally until a Hard Reset, a POR, or an unlocking of the register map happens. The CRCREG[15:0] bits will then be calculated continuously and checked against the reference checksum. If the CRCREG[15:0] bits are different than the reference, the interrupt sends a flag by setting the $\overline{DR}$ pin to a logic low state until it is cleared.

NOTES:

© 2013-2020 Microchip Technology Inc.

7.0 BASIC APPLICATION RECOMMENDATIONS

7.1 Typical Application Examples

For power strip power metering applications, such as the MCP3914 application referenced in Figure 7-1, it can be used as a starting point for MCP3913 applications.The most common solution is to use one channel for voltage measurement and the rest of the channels for current measurement. Since all current lines are at the same potential, shunts can be used as current sensors, even if they do not provide any galvanic isolation.

Since all channels are identical in the MCP3913, any channel can be chosen as the voltage channel (preferably CH0 or CH5 since they are on the edges and can lead to a cleaner layout).

For polyphase metering applications, such as three-phase meters, it is recommended to use a current sensor that provides galvanic isolations: Current Transformers, Rogowski coils, Hall sensors, etc.

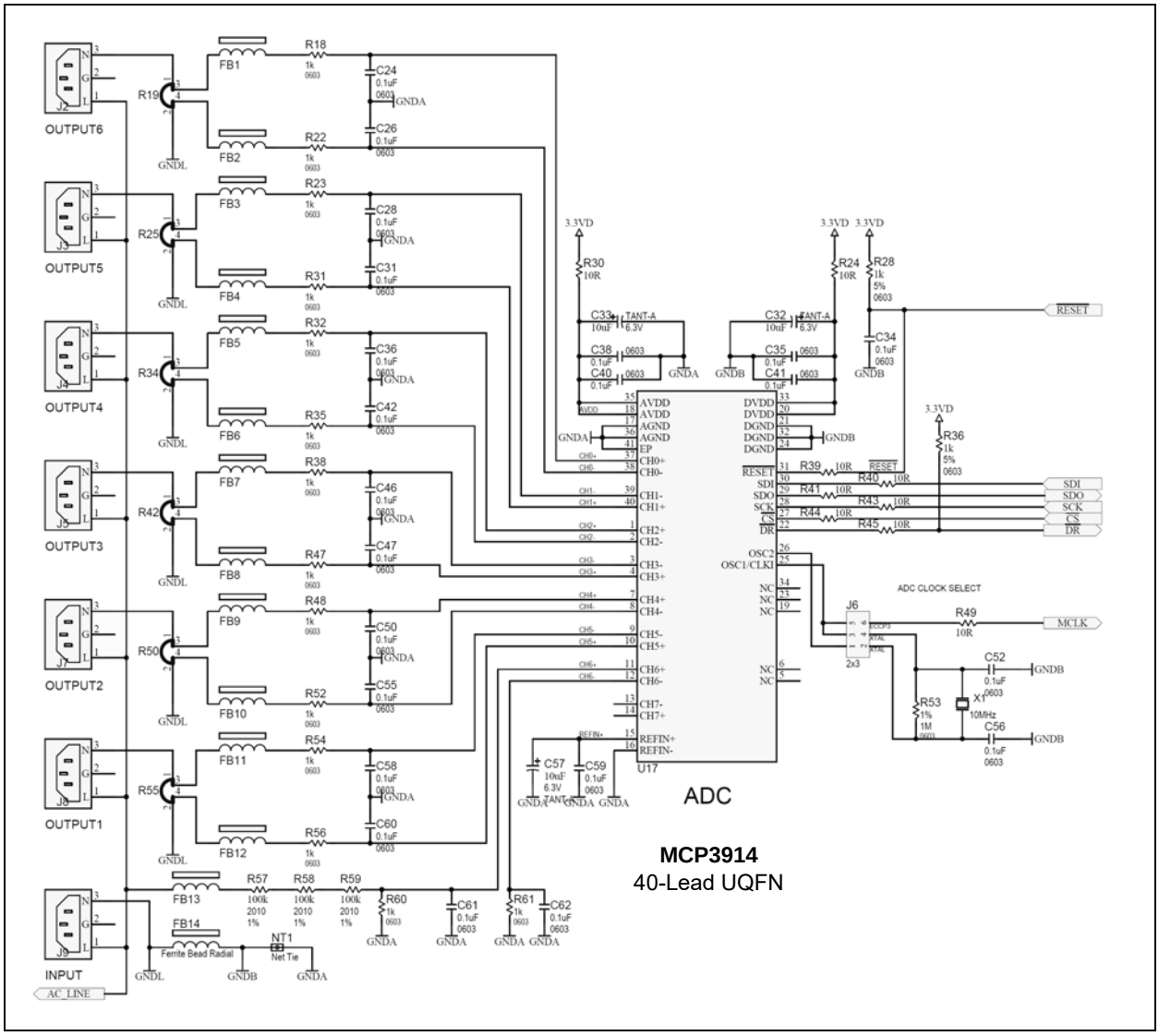

FIGURE 7-1: *MCP3914 Power Strip Application Example Schematic (may be used as starting point for MCP3913 applications).*

7.2 Power Supply Design and Bypassing

The MCP3913 device was designed to measure positive and negative voltages that might be generated by a current-sensing device. This current-sensing device, with a Common-mode voltage close to 0V, is referred to as A_{GND}, which is a shunt or Current Transformer (CT) with burden resistors attached to ground. The high performance and good flexibility that characterize this ADC enables them to be used in other applications, as long as the absolute voltage on each pin, referred to A_{GND}, stays in the -1V to +1V interval.

In any system, the analog ICs (such as references or operational amplifiers) are always connected to the analog ground plane. The MCP3913 should also be considered as a sensitive analog component and connected to the analog ground plane. The ADC features two pairs of pins: A_{GND} and AV_{DD}, D_{GND} and DV_{DD}. For best performance, it is recommended to keep the two pairs connected to two different networks (Figure 7-2). This way, the design will feature two ground traces and two power supplies (Figure 7-3).

This means the analog circuitry (including MCP3913) and the digital circuitry (MCU) should have separate power supplies and return paths to the external ground reference, as described in Figure 7-2. An example of a typical power supply circuit, with different lines for analog and digital power, is shown in Figure 7-3. A possible split example is shown in Figure 7-4, where the ground star connection can be done at the bottom of the device with the exposed pad. The split here between analog and digital can be done under the device, and AV_{DD} and DV_{DD} can be connected together with lines coming under the ground plane.

Another possibility, sometimes easier to implement in terms of PCB layout, is to consider the MCP3913 as an analog component, and therefore, connect both AV_{DD} and DV_{DD} together, and A_{GND} and D_{GND} together, with a star connection. In this scheme, the decoupling capacitors may be larger due to the ripple on the digital power supply (caused by the digital filters and the SPI interface of the MCP3913) now causing glitches on the analog power supply.

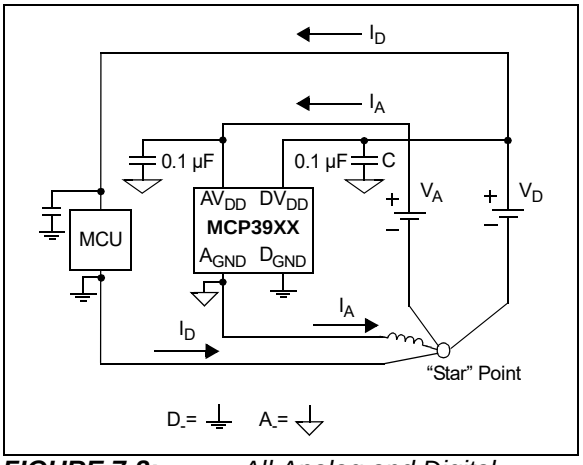

FIGURE 7-2: *All Analog and Digital Return Paths Need to Stay Separate with Proper Bypass Capacitors.*

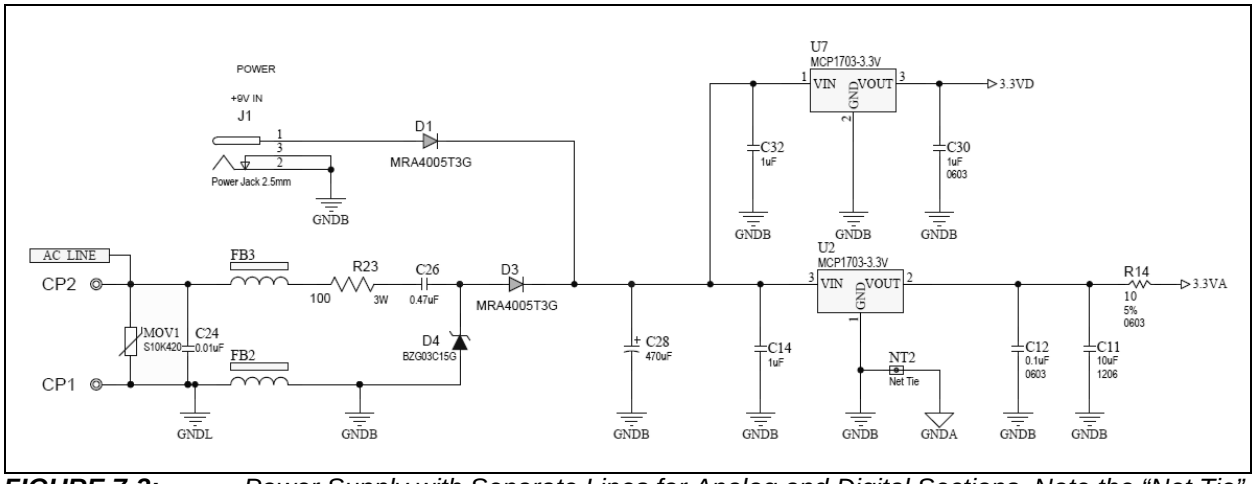

FIGURE 7-3: *Power Supply with Separate Lines for Analog and Digital Sections. Note the "Net Tie" Object NT2 that Represents the Start Ground Connection.*

© 2013-2020 Microchip Technology Inc.

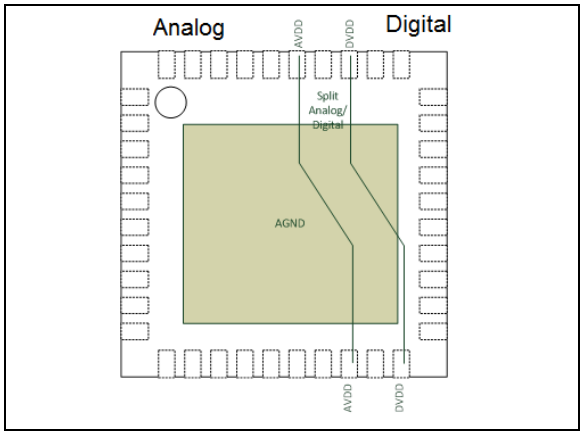

FIGURE 7-4: *Separation of Analog and Digital Circuits on Layout.*

Figure 7-5 shows a more detailed example with a direct connection to a high-voltage line (e.g., a two-wire 120V or 220V system). A current-sensing shunt is used for current measurement on the high side/line side that also supplies the ground for the system. This is necessary as the shunt is directly connected to the channel input pins of the MCP3913. To reduce sensitivity to external influences, such as EMI, these two wires should form a twisted pair, as noted in Figure 7-5. The power supply and MCU are separated on the right side of the PCB, surrounded by the digital ground plane. The MCP3913 is kept on the left side, surrounded by the analog ground plane. There are two separate power supplies going to the digital section of the system and the analog section, including the MCP3913. With this placement, there are two separate current supply paths and current return paths, I_A and I_D.

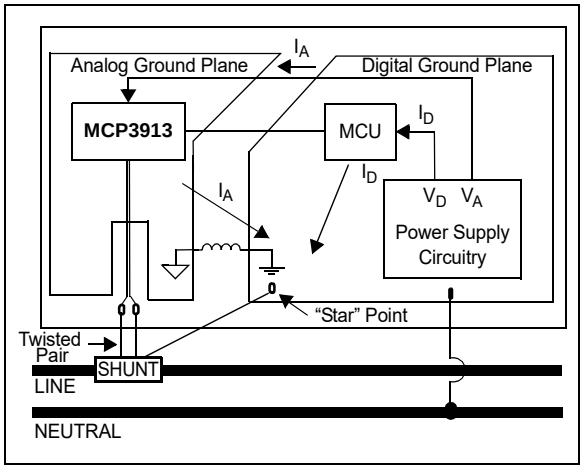

FIGURE 7-5: *Connection Diagram.*

The ferrite bead between the digital and analog ground planes helps keep high-frequency noise from entering the device. This ferrite bead is recommended to be low resistance; most often it is a THT component. Ferrite beads are typically placed on the shunt inputs and into the power supply circuit for additional protection.

7.3 SPI Interface Digital Crosstalk

The MCP3913 incorporates a high-speed 20 MHz SPI digital interface. This interface can induce a crosstalk, especially with the outer channels (CH0, for example), if it is running at its full speed without any precautions. The crosstalk is caused by the switching noise created by the digital SPI signals (also called ground bouncing). This crosstalk would negatively impact the SNR in this case. The noise is attenuated if a proper separation between the analog and digital power supplies is put in place (see **Section 7.2 "Power Supply Design and Bypassing"**).

In order to further remove the influence of the SPI communication on measurement accuracy, it is recommended to add series resistors on the SPI lines to reduce the current spikes caused by the digital switching noise (see Figure 7-5 where these resistors have been implemented). The resistors also help to keep the level of electromagnetic emissions low.

The measurement graphs provided in this MCP3913 data sheet have been performed with 100Ω series resistors connected on each SPI I/O pin. Measurement accuracy disturbances have not been observed, even at the full speed of 20 MHz interfacing.

The crosstalk performance is dependent on the package choice due to the difference in the pin arrangement (dual in-line or quad) and is improved in the 40-lead UQFN package.

7.4 Sampling Speed and Bandwidth

If ADC power consumption is not a concern in the design, the BOOST settings can be increased for best performance so that the OSR is always kept at the maximum settings to improve the SINAD performance (see Table 7-1). If the MCU cannot generate a clock fast enough, it is possible to tap the OSC1/OSC2 pins of the MCP3913 crystal oscillator directly to the crystal of the microcontroller. When the sampling frequency is enlarged, the phase resolution is improved, and with the OSR increased, the phase compensation range can be kept in the same range as the default settings.

TABLE 7-1: SAMPLING SPEED vs. MCLK AND OSR, ADC PRESCALE 1:1

MCLK (MHz)	BOOST[1:0]	OSR	Sampling Speed (ksps)
16	11	1024	3.91
14	11	1024	3.42
12	11	1024	2.93
10	10	1024	2.44
8	10	512	3.91
6	01	512	2.93
4	01	256	3.91

© 2013-2020 Microchip Technology Inc.

7.5 Differential Inputs Anti-Aliasing Filter

Due to the nature of the ADCs used in the MCP3913 (oversampling converters), each differential input of the ADC channels requires an anti-aliasing filter so that the oversampling frequency (DMCLK) is largely attenuated and does not generate any disturbances on the ADC accuracy. This anti-aliasing filter also needs to have a gain close to one in the signal bandwidth of interest.

Typically for 50/60 Hz measurement and default settings (DMCLK = 1 MHz), a simple RC filter with 1 kΩ and 100 nF can be used. The anti-aliasing filter used for the measurement graphs is a first-order RC filter with 1 kΩ and 15 nF. The typical schematic for connecting a Current Transformer to the ADC is shown in Figure 7-6. If wires are involved, twisting them is also recommended.

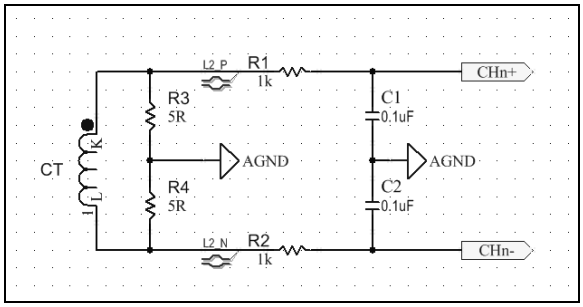

FIGURE 7-6: *First-Order Anti-Aliasing Filter for CT-Based Designs.*

The di/dt current sensors, such as Rogowski coils, can be an alternative to Current Transformers. Since these sensing elements are highly sensitive to high-frequency electromagnetic fields, using a second-order anti-aliasing filter is recommended to increase the attenuation of potential perturbing RF signals.

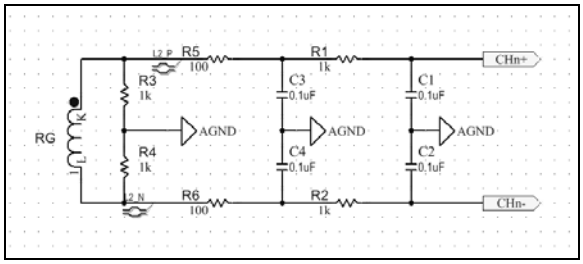

FIGURE 7-7: *Second-Order Anti-Aliasing Filter for Rogowski Coil-Based Designs.*

The MCP3913 is highly recommended in applications using di/dt as current sensors because of the extremely low noise floor at low frequencies. In such applications, a Low-Pass Filter (LPF) with a cutoff frequency much lower than the signal frequency (50-60 Hz for metering) is used to compensate for the 90-degree shift and for the 20 db/decade attenuation induced by the di/dt sensor. Because of this filter, the SNR will be decreased, since the signal will attenuate by a few orders of magnitude, while the low-frequency noise will not be attenuated. Usually, a high-order High-Pass Filter (HPF) is used to attenuate the low-frequency noise in order to prevent a dramatic degradation of the SNR, which can be very important in other parts. A high-order filter will also consume a significant portion of the computation power of the MCU. When using the MCP3913, such a high-order HPF is not required, since this part has a low noise floor at low frequencies. A first-order HPF is enough to achieve very good accuracy.

7.6 Energy Measurement Error Considerations

The measurement error is a typical representation of the nonlinearity of a pair of ADCs (see **Section 4.0 "Terminology and Formulas"** for the definition of measurement error). The measurement error is dependent on the THD and on the noise floor of the ADCs.

Improving the measurement error specification on the MCP3913 can be realized by increasing the OSR (to get a better SINAD and THD performance), and to some extent, the BOOST settings (if the bandwidth of the measurements is too limited by the bandwidth of the amplifiers in the Delta-Sigma ADCs). In most of the energy metering AC applications, High-Pass Filters are used to cancel the offset on each ADC channel (current and voltage channels), and therefore, a single point calibration is necessary to calibrate the system for active energy measurement. This calibration is a system gain calibration, and the user can utilize the EN_GAINCAL bit and the GAINCAL_CHn registers to perform this digital calibration. After such calibration, typical measurement error curves, such as shown in Figure 2-7, can be generated by sweeping the current channel amplitude and measuring the energy at the outputs (the energy calculations here are being realized off-chip). The error is measured using a gain of 1x, as it is commonly used in most CT-based applications.

© 2013-2020 Microchip Technology Inc.

At low signal amplitude values (typically 1000:1 dynamic range and higher), the crosstalk between channels, mainly caused by the PCB, becomes a significant part of the perturbation as the measurement error increases. The 1-point measurement error curves in Figure 2-5 have been performed with a full-scale sine wave on all the inputs that are not measured, which means that these channels induce a maximum amount of crosstalk on the measurement error curve. In order to avoid such behavior, a 2-point calibration can be put in place in the calculation section.

This 2-point calibration can be a simple linear interpolation between two calibration points (one at high amplitudes, one at low amplitudes at each end of the dynamic range) and helps to significantly lower the effect of crosstalk between channels. A 2-point calibration is very effective in maintaining the measurement error close to zero on the whole dynamic range, since the nonlinearity and distortion of the MCP3913 is very low. Figure 2-6 shows the measurement error curves obtained with the same ADC data taken for Figure 2-5, but where a 2-point calibration has been applied. The difference is significant only at the low end of the dynamic range, where all the perturbing factors are a bigger part of the ADC output signals. These curves show extremely tight measurement error across the full dynamic range (here, typically 10,000:1), which is required in high-accuracy class meters.

© 2013-2020 Microchip Technology Inc.

NOTES:

© 2013-2020 Microchip Technology Inc.

8.0 MCP3913 INTERNAL REGISTERS

The addresses associated with the internal registers are listed in Table 8-1. This section also describes the registers in detail. All registers are 24-bit long registers, which can be addressed and read separately.

The format of the data registers (0x00 to 0x05) can be changed with the WIDTH_DATA[1:0] bits in the STATUSCOM register. The READ[1:0] and WRITE bits define the groups and types of registers for continuous read/write communication or looping on address sets, as shown in Table 8-2.

TABLE 8-1: MCP3913 REGISTER MAP

Address	Name	Bits	R/W	Description
0x00	CHANNEL0	24	R	Channel 0 ADC Data[23:0], MSB first
0x01	CHANNEL1	24	R	Channel 1 ADC Data[23:0], MSB first
0x02	CHANNEL2	24	R	Channel 2 ADC Data[23:0], MSB first
0x03	CHANNEL3	24	R	Channel 3 ADC Data[23:0], MSB first
0x04	CHANNEL4	24	R	Channel 4 ADC Data[23:0], MSB first
0x05	CHANNEL5	24	R	Channel 5 ADC Data[23:0], MSB first
0x06	Unused	24	U	Unused
0x07	Unused	24	U	Unused
0x08	MOD	24	R/W	Delta-Sigma Modulators Output Value
0x09	PHASE0	24	R/W	Phase Delay Configuration Register – Channel Pairs 4/5
0x0A	PHASE1	24	R/W	Phase Delay Configuration Register – Channel Pairs 0/1 and 2/3
0x0B	GAIN	24	R/W	Gain Configuration Register
0x0C	STATUSCOM	24	R/W	Status and Communication Register
0x0D	CONFIG0	24	R/W	Configuration Register
0x0E	CONFIG1	24	R/W	Configuration Register
0x0F	OFFCAL_CH0	24	R/W	Offset Correction Register – Channel 0
0x10	GAINCAL_CH0	24	R/W	Gain Correction Register – Channel 0
0x11	OFFCAL_CH1	24	R/W	Offset Correction Register – Channel 1
0x12	GAINCAL_CH1	24	R/W	Gain Correction Register – Channel 1
0x13	OFFCAL_CH2	24	R/W	Offset Correction Register – Channel 2
0x14	GAINCAL_CH2	24	R/W	Gain Correction Register – Channel 2
0x15	OFFCAL_CH3	24	R/W	Offset Correction Register – Channel 3
0x16	GAINCAL_CH3	24	R/W	Gain Correction Register – Channel 3
0x17	OFFCAL_CH4	24	R/W	Offset Correction Register – Channel 4
0x18	GAINCAL_CH4	24	R/W	Gain Correction Register – Channel 4
0x19	OFFCAL_CH5	24	R/W	Offset Correction Register – Channel 5
0x1A	GAINCAL_CH5	24	R/W	Gain Correction Register – Channel 5
0x1B	Unused	24	U	Unused
0x1C	Unused	24	U	Unused
0x1D	Unused	24	U	Unused
0x1E	Unused	24	U	Unused
0x1F	LOCK/CRC	24	R/W	Security Register (Password and CRC-16 on Register Map)

© 2013-2020 Microchip Technology Inc.

TABLE 8-2: REGISTER MAP GROUPING FOR ALL CONTINUOUS READ/WRITE MODES

Function	Address	READ[1:0]				WRITE	
		= 11	= 10	= 01	= 00	= 1	= 0
CHANNEL 0	0x00	LOOP ENTIRE REGISTER MAP	TYPE	GROUP	Static	Not Writable (Address undefined for Write access)	Not Writable (Address undefined for Write access)
CHANNEL 1	0x01				Static		
CHANNEL 2	0x02			GROUP	Static		
CHANNEL 3	0x03				Static		
CHANNEL 4	0x04			GROUP	Static		
CHANNEL 5	0x05				Static		
MOD	0x08		TYPE	GROUP	Static	LOOP ONLY ON WRITABLE REGISTERS	Static
PHASE0	0x09				Static		Static
PHASE1	0x0A				Static		Static
GAIN	0x0B				Static		Static
STATUSCOM	0x0C			GROUP	Static		Static
CONFIG0	0x0D				Static		Static
CONFIG1	0x0E				Static		Static
OFFCAL_CH0	0x0F			GROUP	Static		Static
GAINCAL_CH0	0x10				Static		Static
OFFCAL_CH1	0x11			GROUP	Static		Static
GAINCAL_CH1	0x12				Static		Static
OFFCAL_CH2	0x13			GROUP	Static		Static
GAINCAL_CH2	0x14				Static		Static
OFFCAL_CH3	0x15			GROUP	Static		Static
GAINCAL_CH3	0x16				Static		Static
OFFCAL_CH4	0x17			GROUP	Static		Static
GAINCAL_CH4	0x18				Static		Static
OFFCAL_CH5	0x19			GROUP	Static		Static
GAINCAL_CH5	0x1A				Static		Static
LOCK/CRC	0x1F			GROUP	Static		Static

© 2013-2020 Microchip Technology Inc.

8.1 CHANNEL Registers – ADC Channel Data Output Registers

Name	Bits	Address	Cof.
CHANNEL0	24	0x00	R
CHANNEL1	24	0x01	R
CHANNEL2	24	0x02	R
CHANNEL3	24	0x03	R
CHANNEL4	24	0x04	R
CHANNEL5	24	0x05	R

The ADC Channel Data Output registers always contain the most recent A/D conversion data for each channel. These registers are read-only. They can be accessed independently or linked together (with the READ[1:0] bits). These registers are latched when an ADC read communication occurs. When a data ready event occurs during a read communication, the most current ADC data are also latched to avoid data corruption issues. These registers are updated and latched together if DR_LINK = 1 synchronously with the data ready pulse (toggling on the most lagging ADC channel data ready event).

REGISTER 8-1: MCP3913 CHANNEL REGISTERS

R-0 (MSB)	R-0	R-0	R-0	R-0	R-0	R-0	R-0
DATA_CHn[23:16] (MSB)							
bit 23							bit 16

R-0	R-0	R-0	R-0	R-0	R-0	R-0	R-0
DATA_CHn[15:8]							
bit 15							bit 8

R-0	R-0	R-0	R-0	R-0	R-0	R-0	R-0
DATA_CHn[7:0]							
bit 7							bit 0

Legend:			
R = Readable bit	W = Writable bit	U = Unimplemented bit, read as ‘0’	
-n = Value at POR	‘1’ = Bit is set	‘0’ = Bit is cleared	x = Bit is unknown

bit 23-0 **DATA_CHn[23:0]:** Output Code from ADC Channel n bits

These data are post-calibration if the EN_OFFCAL or EN_GAINCAL bits are enabled. These data can be formatted in 16-/24-/32-bit modes, depending on the WIDTH_DATA[1:0] bits setting (see **Section 5.5 “ADC Output Coding”**).

8.2 MOD Register – Modulators Output Register

Name	Bits	Address	Cof.
MOD	24	0x08	R/W

The MOD register contains the most recent modulator data output and is updated at a DMCLK rate. The default value corresponds to an equivalent input of 0V on all ADCs. Each bit in this register corresponds to one comparator output on one of the channels. Do not write to this register to ensure the accuracy of each ADC.

REGISTER 8-2: MOD REGISTER

R/W-0	R/W-0	R/W-1	R/W-1	R/W-0	R/W-0	R/W-1	R/W-1
COMP3_CH5	COMP2_CH5	COMP1_CH5	COMP0_CH5	COMP3_CH4	COMP2_CH4	COMP1_CH4	COMP0_CH4
bit 23							bit 16

R/W-0	R/W-0	R/W-1	R/W-1	R/W-0	R/W-0	R/W-1	R/W-1
COMP3_CH3	COMP2_CH3	COMP1_CH3	COMP0_CH3	COMP3_CH2	COMP2_CH2	COMP1_CH2	COMP0_CH2
bit 15							bit 8

R/W-0	R/W-0	R/W-1	R/W-1	R/W-0	R/W-0	R/W-1	R/W-1
COMP3_CH1	COMP2_CH1	COMP1_CH1	COMP0_CH1	COMP3_CH0	COMP2_CH0	COMP1_CH0	COMP0_CH0
bit 7							bit 0

Legend:			
R = Readable bit	W = Writable bit	U = Unimplemented bit, read as ‘0’	
-n = Value at POR	‘1’ = Bit is set	‘0’ = Bit is cleared	x = Bit is unknown

bit 23-20 **COMPn_CH5**: Comparator Outputs from ADC Channel 5 bits
bit 19-16 **COMPn_CH4**: Comparator Outputs from ADC Channel 4 bits
bit 15-12 **COMPn_CH3**: Comparator Outputs from ADC Channel 3 bits
bit 11-8 **COMPn_CH2**: Comparator Outputs from ADC Channel 2 bits
bit 7-4 **COMPn_CH1**: Comparator Outputs from ADC Channel 1 bits
bit 3-0 **COMPn_CH0**: Comparator Outputs from ADC Channel 0 bits

© 2013-2020 Microchip Technology Inc.

8.3 PHASE0 Register – Phase Configuration Register for Channel Pair 4/5

Name	Bits	Address	Cof.
PHASE0	24	0x09	R/W

Any write to this register automatically resets and restarts all active ADCs.

REGISTER 8-3: PHASE0 REGISTER

U-0	U-0	U-0	U-0	U-0	U-0	U-0	U-0
—	—	—	—	—	—	—	—
bit 23							bit 16

U-0	U-0	U-0	U-0	R/W-0	R/W-0	R/W-0	R/W-0
—	—	—	—	PHASEC[11:8]			
bit 15							bit 8

R/W-0	R/W-0	R/W-0	R/W-0	R/W-0	R/W-0	R/W-0	R/W-0
PHASEC[7:0]							
bit 7							bit 0

Legend:			
R = Readable bit	W = Writable bit	U = Unimplemented bit, read as ‘0’	
-n = Value at POR	‘1’ = Bit is set	‘0’ = Bit is cleared	x = Bit is unknown

bit 23-12 **Unimplemented:** Read as ‘0’

bit 11-0 **PHASEC[11:0]:** Phase Delay Between Channels CH4 and CH5 (reference) bits
Delay = PHASEC[11:0] decimal code/DMCLK.

8.4 PHASE1 Register – Phase Configuration Register for Channel Pairs 2/3 and 0/1

Name	Bits	Address	Cof.
PHASE1	24	0x0A	R/W

Any write to this register automatically resets and restarts all active ADCs.

REGISTER 8-4: PHASE1 REGISTER

R/W-0	R/W-0	R/W-0	R/W-0	R/W-0	R/W-0	R/W-0	R/W-0
PHASEB[11]	PHASEB[10]	PHASEB[9]	PHASEB[8]	PHASEB[7]	PHASEB[6]	PHASEB[5]	PHASEB[4]
bit 23							bit 16

R/W-0	R/W-0	R/W-0	R/W-0	R/W-0	R/W-0	R/W-0	R/W-0
PHASEB[3]	PHASEB[2]	PHASEB[1]	PHASEB[0]	PHASEA[11]	PHASEA[10]	PHASEA[9]	PHASEA[8]
bit 15							bit 8

R/W-0	R/W-0	R/W-0	R/W-0	R/W-0	R/W-0	R/W-0	R/W-0
PHASEA[7]	PHASEA[6]	PHASEA[5]	PHASEA[4]	PHASEA[3]	PHASEA[2]	PHASEA[1]	PHASEA[0]
bit 7							bit 0

Legend:			
R = Readable bit	W = Writable bit	U = Unimplemented bit, read as ‘0’	
-n = Value at POR	‘1’ = Bit is set	‘0’ = Bit is cleared	x = Bit is unknown

bit 23-12 **PHASEB[11:0]:** Phase Delay Between Channels CH2 and CH3 (reference) bits
Delay = PHASEB[11:0] decimal code/DMCLK.

bit 11-0 **PHASEA[11:0]:** Phase Delay Between Channels CH0 and CH1(reference) bits
Delay = PHASEA[11:0] decimal code/DMCLK.

© 2013-2020 Microchip Technology Inc.

8.5 GAIN Register – PGA Gain Configuration Register

Name	Bits	Address	Cof.
GAIN	24	0x0B	R/W

REGISTER 8-5: GAIN REGISTER

U-0	U-0	U-0	U-0	U-0	U-0	R/W-0	R/W-0
—	—	—	—	—	—	PGA_CH5[2]	PGA_CH5[1]
bit 23							bit 16

R/W-0	R/W-0	R/W-0	R/W-0	R/W-0	R/W-0	R/W-0	R/W-0
PGA_CH5[0]	PGA_CH4[2]	PGA_CH4[1]	PGA_CH4[0]	PGA_CH3[2]	PGA_CH3[1]	PGA_CH3[0]	PGA_CH2[2]
bit 15							bit 8

R/W-0	R/W-0	R/W-0	R/W-0	R/W-0	R/W-0	R/W-0	R/W-0
PGA_CH2[1]	PGA_CH2[0]	PGA_CH1[2]	PGA_CH1[1]	PGA_CH1[0]	PGA_CH0[2]	PGA_CH0[1]	PGA_CH0[0]
bit 7							bit 0

Legend:			
R = Readable bit	W = Writable bit	U = Unimplemented bit, read as ‘0’	
-n = Value at POR	‘1’ = Bit is set	‘0’ = Bit is cleared	x = Bit is unknown

bit 23-18 **Unimplemented:** Read as 0

bit 17-0 **PGA_CHn[2:0]:** PGA Setting for Channel n bits

`111` = Reserved (Gain = `1`)
`110` = Reserved (Gain = `1`)
`101` = Gain is 32
`100` = Gain is 16
`011` = Gain is 8
`010` = Gain is 4
`001` = Gain is 2
`000` = Gain is 1 (default)

8.6 STATUSCOM Register – Status and Communication Register

Name	Bits	Address	Cof.
STATUSCOM	24	0x0C	R/W

REGISTER 8-6: STATUSCOM REGISTER

R/W-1	R/W-0	R/W-1	R/W-0	R/W-1	R/W-0	R/W-0	R/W-1
READ[1:0]		WRITE	$\overline{\text{DR_HIZ}}$	DR_LINK	WIDTH_ CRC	WIDTH_ DATA[1:0]	
bit 23							bit 16

R/W-0	R/W-0	r-0	r-0	U-0	U-0	U-0	U-0
EN_CRCCOM	EN_INT	—	—	—	—	—	—
bit 15							bit 8

U-0	U-0	R-1	R-1	R-1	R-1	R-1	R-1
—	—	DRSTATUS[5:0]					
bit 7							bit 0

Legend:	r = Reserved bit		
R = Readable bit	W = Writable bit	U = Unimplemented bit, read as ‘0’	
-n = Value at POR	‘1’ = Bit is set	‘0’ = Bit is cleared	x = Bit is unknown

bit 23-22 **READ[1:0]:** Address Counter Increment Setting for Read Communication bits
`11` = Address counter auto-increments, loops on the entire register map
`10` = Address counter auto-increments, loops on register TYPES (default)
`01` = Address counter auto-increments, loops on register GROUPS
`00` = Address not incremented, continually reads the same single register address

bit 21 **WRITE:** Address Counter Increment Setting for Write Communication bit
`1` = Address counter auto-increments and loops on writable part of the register map (default)
`0` = Address counter not incremented, continually writes to the same single register address

bit 20 **$\overline{\text{DR_HIZ}}$:** Data Ready Pin Inactive State Control bit
`1` = The $\overline{\text{DR}}$ pin state is a logic high when data are NOT ready
`0` = The $\overline{\text{DR}}$ pin state is high-impedance when data are NOT ready (default)

bit 19 **DR_LINK:** Data Ready Link Control bit
`1` = Data ready link enabled; only one pulse is generated on the $\overline{\text{DR}}$ pin for all ADC channels, corresponding to the data ready pulse of the most lagging ADC
`0` = Data ready link disabled; each ADC produces its own data ready pulse on the $\overline{\text{DR}}$ pin

bit 18 **WIDTH_CRC:** CRC-16 Format on Communications bit
`1` = 32-bit (CRC-16 code is followed by sixteen zeros); this coding is compatible with CRC implementation in most 32-bit MCUs (including PIC32 MCUs)
`0` = 16-bit (default)

bit 17-16 **WIDTH_DATA[1:0]:** ADC Data Format Settings for all ADCs bits
(see **Section 5.5 “ADC Output Coding”**)
`11` = 32-bit with sign extension
`10` = 32-bit with zeros padding
`01` = 24-bit (default)
`00` = 16-bit (with rounding)

© 2013-2020 Microchip Technology Inc.

REGISTER 8-6: STATUSCOM REGISTER (CONTINUED)

bit 15 **EN_CRCCOM:** CRC-16 Checksum on Serial Communications Enable bit

1 = CRC-16 checksum is provided at the end of each communication sequence (therefore, each communication is longer); the CRC-16 message is the complete communication sequence (see **Section 6.9 "Securing Read Communications Through CRC-16 Checksum"** for more details)

0 = Disabled (default)

bit 14 **EN_INT:** CRCREG Interrupt Function Enable bit

1 = The interrupt flag for the CRCREG checksum verification is enabled. The Data Ready pin ($\overline{DR}$) will become logic low and stays logic low if a CRCREG checksum error happens. This interrupt is cleared if the LOCK[7:0] value is made equal to the password value (0xA5).

0 = The interrupt flag for the CRCREG checksum verification is disabled. The CRCREG[15:0] bits are still calculated properly and can still be read in this mode. No interrupt is generated, even when a CRCREG checksum error happens (default).

bit 13-12 **Reserved:** Keep equal to '0' at all times

bit 11-6 **Unimplemented:** Read as '0'

bit 5-0 **DRSTATUS[5:0]:** Individual ADC Channel Data Ready Status bits

DRSTATUS[n] = 1 – Channel CHn data are not ready (default)
DRSTATUS[n] = 0 – Channel CHn data are ready. The status bit is set back to '1' after reading the STATUSCOM register. The status bit is not set back to '1' by the read of the corresponding channel ADC data.

8.7 CONFIG0 Register – Configuration Register 0

Name	Bits	Address	Cof.
CONFIG0	24	0x0D	R/W

REGISTER 8-7: CONFIG0 REGISTER

R/W-0	R/W-0	R/W-1	R/W-1	R/W-1	R/W-0	R/W-0	R/W-0
EN_OFFCAL	EN_GAINCAL	DITHER[1]	DITHER[0]	BOOST[1]	BOOST[0]	PRE[1]	PRE[0]
bit 23							bit 16

R/W-0	R/W-1	R/W-1	U-0	U-0	U-0	U-0	U-0
OSR[2]	OSR[1]	OSR[0]	—	—	—	—	—
bit 15							bit 8

R/W-0	R/W-1	R/W-0	R/W-1	R/W-0	R/W-0	R/W-0	R/W-0
VREFCAL[7]	VREFCAL[6]	VREFCAL[5]	VREFCAL[4]	VREFCAL[3]	VREFCAL[2]	VREFCAL[1]	VREFCAL[0]
bit 7							bit 0

Legend:			
R = Readable bit	W = Writable bit	U = Unimplemented bit, read as ‘0’	
-n = Value at POR	‘1’ = Bit is set	‘0’ = Bit is cleared	x = Bit is unknown

bit 23 **EN_OFFCAL:** 24-Bit Digital Offset Error Calibration on All Channels Enable bit
`1` = Enabled; this mode does not add any group delay to the ADC data
`0` = Disabled (default)

bit 22 **EN_GAINCAL:** 24-Bit Digital Gain Error Calibration on All Channels Enable/Disable bit
`1` = Enabled; this mode adds a group delay on all channels of 24 DMCLK periods, all data ready pulses are delayed by 24 DMCLK clock periods compared to the mode with EN_GAINCAL = `0`.
`0` = Disabled (default)

bit 21-20 **DITHER[1:0]:** Dithering Circuit for Idle Tone’s Cancellation and Improved THD on All Channels Control bits
`11` = Dithering on, Strength = Maximum (default)
`10` = Dithering on, Strength = Medium
`01` = Dithering on, Strength = Minimum
`00` = Dithering is turned off

bit 19-18 **BOOST[1:0]:** Bias Current Selection for all ADCs bits
(impacts achievable maximum sampling speed, see Table 5-2)
`11` = All channels have current x 2
`10` = All channels have current x 1 (default)
`01` = All channels have current x 0.66
`00` = All channels have current x 0.5

bit 17-16 **PRE[1:0]:** Analog Master Clock (AMCLK) Prescaler Value bits
`11` = AMCLK = MCLK/8
`10` = AMCLK = MCLK/4
`01` = AMCLK = MCLK/2
`00` = AMCLK = MCLK (default)

© 2013-2020 Microchip Technology Inc.

REGISTER 8-7: CONFIG0 REGISTER (CONTINUED)

bit 15-13 **OSR[2:0]:** Oversampling Ratio for Delta-Sigma A/D Conversion bits (all channels, f_d/f_S)
`111` = 4096 (f_d = 244 sps for MCLK = 4 MHz, f_s = AMCLK = 1 MHz)
`110` = 2048 (f_d = 488 sps for MCLK = 4 MHz, f_s = AMCLK = 1 MHz)
`101` = 1024 (f_d = 976 sps for MCLK = 4 MHz, f_s = AMCLK = 1 MHz)
`100` = 512 (f_d = 1.953 ksps for MCLK = 4 MHz, f_s = AMCLK = 1 MHz)
`011` = 256 (f_d = 3.90625 ksps for MCLK = 4 MHz, f_s = AMCLK = 1 MHz) (default)
`010` = 128 (f_d = 7.8125 ksps for MCLK = 4 MHz, f_s = AMCLK = 1 MHz)
`001` = 64 (f_d = 15.625 ksps for MCLK = 4 MHz, f_s = AMCLK = 1 MHz)
`000` = 32 (f_d = 31.25 ksps for MCLK = 4 MHz, f_s = AMCLK = 1 MHz)

bit 12-8 **Unimplemented:** Read as '`0`'

bit 7-0 **VREFCAL[7:0]:** Internal Voltage Temperature Coefficient VREFCAL[7:0] Value bits
See **Section 5.6.3 "Temperature Compensation (VREFCAL[7:0])"** for complete description.

8.8 CONFIG1 Register – Configuration Register 1

Name	Bits	Address	Cof.
CONFIG1	24	0x0F	R/W

REGISTER 8-8: CONFIG1 REGISTER

U-0	U-0	R/W-0	R/W-0	R/W-0	R/W-0	R/W-0	R/W-0
—	—	RESET[5:0]					
bit 23							bit 16

U-0	U-0	R/W-0	R/W-0	R/W-0	R/W-0	R/W-0	R/W-0
—	—	SHUTDOWN[5:0]					
bit 15							bit 8

R/W-0	R/W-1	U-0	U-0	U-0	U-0	U-0	U-0
VREFEXT	CLKEXT	—	—	—	—	—	—
bit 7							bit 0

Legend:			
R = Readable bit	W = Writable bit	U = Unimplemented bit, read as ‘0’	
-n = Value at POR	‘1’ = Bit is set	‘0’ = Bit is cleared	x = Bit is unknown

bit 23-22 **Unimplemented:** Read as ‘0’

bit 21-16 **RESET[5:0]:** Each Individual ADC Soft Reset Mode Setting bits
RESET[n] = 1: Channel CHn is in Soft Reset mode
RESET[n] = 0: Channel CHn is not in Soft Reset mode

bit 15-14 **Unimplemented:** Read as ‘0’

bit 13-8 **SHUTDOWN[5:0]:** Each Individual ADC Shutdown Mode Setting bits
SHUTDOWN[n] = 1: ADC Channel CHn is in Shutdown mode
SHUTDOWN[n] = 0: ADC Channel CHn is not in Shutdown mode

bit 7 **VREFEXT:** Internal Voltage Reference selection bit
1 = Internal Voltage Reference Disabled: An external reference voltage needs to be applied across the REFIN+/- pins; the analog power consumption (AI_{DD}) is slightly diminished in this mode since the internal voltage reference is placed into Shutdown mode
0 = Internal Reference Enabled: For optimal accuracy, the REFIN+/OUT pin needs proper decoupling capacitors; REFIN- pin should be connected to A_{GND} when in this mode

bit 6 **CLKEXT:** Internal Clock Selection bit
1 = MCLK is generated externally and should be provided on the OSC1 pin; the crystal oscillator is disabled and consumes no current (default)
0 = Crystal oscillator is enabled; a crystal must be placed between OSC1 and OSC2 with proper decoupling capacitors, the digital power consumption (DI_{DD}) is increased in this mode due to the oscillator

bit 5-0 **Unimplemented:** Read as ‘0’

© 2013-2020 Microchip Technology Inc.

8.9 OFFCAL_CHn and GAINCAL_CHn Registers – Digital Offset and Gain Error Calibration Registers

Name	Bits	Address	Cof.
OFFCAL_CH0	24	0x0F	R/W
GAINCAL_CH0	24	0x10	R/W
OFFCAL_CH1	24	0x11	R/W
GAINCAL_CH1	24	0x12	R/W
OFFCAL_CH2	24	0x13	R/W
GAINCAL_CH2	24	0x14	R/W
OFFCAL_CH3	24	0x15	R/W
GAINCAL_CH3	24	0x16	R/W
OFFCAL_CH4	24	0x17	R/W
GAINCAL_CH4	24	0x18	R/W
OFFCAL_CH5	24	0x19	R/W
GAINCAL_CH5	24	0x1A	R/W

REGISTER 8-9: OFFCAL_CHn REGISTERS

R/W-0	R/W-0	R/W-0	R/W-0	R/W-0	R/W-0	R/W-0	R/W-0
OFFCAL_CHn[23:16]							
bit 23							bit 16

R/W-0	R/W-0	R/W-0	R/W-0	R/W-0	R/W-0	R/W-0	R/W-0
OFFCAL_CHn[15:8]							
bit 15							bit 8

R/W-0	R/W-0	R/W-0	R/W-0	R/W-0	R/W-0	R/W-0	R/W-0
OFFCAL_CHn[7:0]							
bit 7							bit 0

Legend:			
R = Readable bit	W = Writable bit	U = Unimplemented bit, read as ‘0’	
-n = Value at POR	‘1’ = Bit is set	‘0’ = Bit is cleared	x = Bit is unknown

bit 23-0 **OFFCAL_CHn[23:0]:** Corresponding Channel CHn Digital Offset Calibration Value bits

This register is simply added to the output code of the channel, bit-by-bit. This register is a 24-bit two’s complement MSB first coding register. CHn Output Code = OFFCAL_CHn + ADC CHn Output Code. This register is a Don’t Care if EN_OFFCAL = `0` (offset calibration disabled), but its value is not cleared by the EN_OFFCAL bit.

REGISTER 8-10: GAINCAL_CHn REGISTERS

R/W-0	R/W-0	R/W-0	R/W-0	R/W-0	R/W-0	R/W-0	R/W-0
GAINCAL_CHn[23:16]							
bit 23							bit 16

R/W-0	R/W-0	R/W-0	R/W-0	R/W-0	R/W-0	R/W-0	R/W-0
GAINCAL_CHn[15:8]							
bit 15							bit 8

R/W-0	R/W-0	R/W-0	R/W-0	R/W-0	R/W-0	R/W-0	R/W-0
GAINCAL_CHn[7:0]							
bit 7							bit 0

Legend:			
R = Readable bit	W = Writable bit	U = Unimplemented bit, read as ‘0’	
-n = Value at POR	‘1’ = Bit is set	‘0’ = Bit is cleared	x = Bit is unknown

bit 23-0 **GAINCAL_CHn:** Corresponding Channel CHn Digital Gain Error Calibration Value bits

This register is a 24-bit signed MSB first coding with a range of -1x to +0.9999999x (from 0x800000 to 0x7FFFFF). The gain calibration adds 1x to this register and multiplies it to the output code of the channel, bit-by-bit, after offset calibration. The range of the gain calibration is thus from 0x to 1.9999999x (from 0x800000 to 0x7FFFFF). The LSB corresponds to a 2^{-23} increment in the multiplier. CHn Output Code = (GAINCAL_CHn + 1) * ADC CHn Output Code. This register is a Don’t Care if EN_GAINCAL = 0 (gain calibration disabled), but its value is not cleared by the EN_GAINCAL bit.

© 2013-2020 Microchip Technology Inc.

8.10 SECURITY Register – Password and CRC-16 on Register Map

Name	Bits	Address	Cof.
LOCK/CRC	24	0x1F	R/W

REGISTER 8-11: LOCK/CRC REGISTER

R/W-1	R/W-0	R/W-1	R/W-0	R/W-0	R/W-1	R/W-0	R/W-1
LOCK[7:0]							
bit 23							bit 16

R-0	R-0	R-0	R-0	R-0	R-0	R-0	R-0
CRCREG[15:8]							
bit 15							bit 8

R-0	R-0	R-0	R-0	R-0	R-0	R-0	R-0
CRCREG[7:0]							
bit 7							bit 0

Legend:			
R = Readable bit	W = Writable bit	U = Unimplemented bit, read as ‘0’	
-n = Value at POR	‘1’ = Bit is set	‘0’ = Bit is cleared	x = Bit is unknown

bit 23-16 **LOCK[7:0]:** Lock Code for Writable Part of Register Map bits

LOCK[7:0] = Password = 0xA5 (default value): The entire register map is writable. The CRCREG[15:0] bits and the CRC interrupt are cleared. No CRC-16 checksum on register map is calculated.

LOCK[7:0] Bits are Different than 0xA5: The only writable register is the LOCK/CRC register. All other registers will appear as undefined while in this mode. The CRCREG checksum is calculated continuously and can generate interrupts if the CRC interrupt EN_INT bit has been enabled. If a write to a register needs to be performed, the user needs to unlock the register map beforehand by writing 0xA5 to the LOCK[7:0] bits.

bit 15-0 **CRCREG[15:0]:** CRC-16 Checksum Calculated with Writable Part of Register Map as a Message bits

This is a read-only 16-bit code. This checksum is continuously recalculated and updated every 21 DMCLK periods. It is reset to its default value (0x0000) when LOCK[7:0] = 0xA5.

NOTES:

© 2013-2020 Microchip Technology Inc.

9.0 PACKAGING INFORMATION

9.1 Package Marking Information

28-Lead SSOP (5.30 mm)

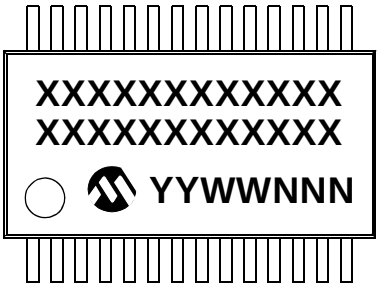

Example

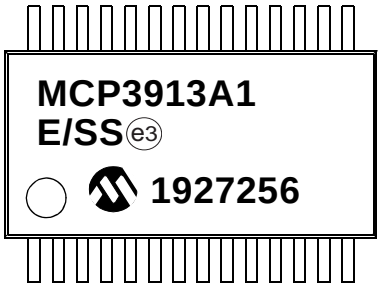

40-Lead UQFN (5x5x0.5 mm)

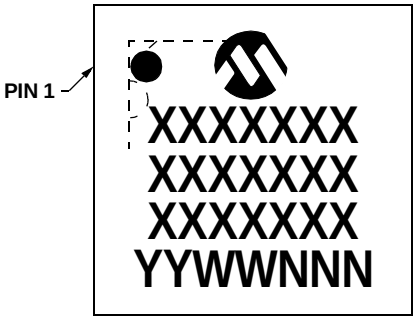

Example

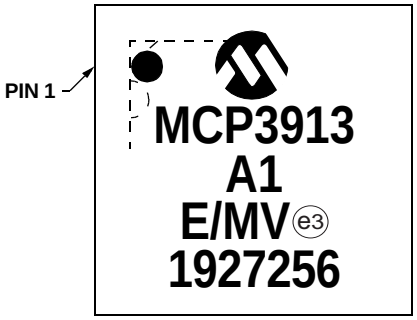

Legend:	XX...X	Customer-specific information
	Y	Year code (last digit of calendar year)
	YY	Year code (last 2 digits of calendar year)
	WW	Week code (week of January 1 is week ‘01’)
	NNN	Alphanumeric traceability code
	e3	Pb-free JEDEC designator for Matte Tin (Sn)
	*	This package is Pb-free. The Pb-free JEDEC designator (e3) can be found on the outer packaging for this package.

Note: In the event the full Microchip part number cannot be marked on one line, it will be carried over to the next line, thus limiting the number of available characters for customer-specific information.

28-Lead Plastic Shrink Small Outline (SS) - 5.30 mm Body [SSOP]

Note: For the most current package drawings, please see the Microchip Packaging Specification located at http://www.microchip.com/packaging

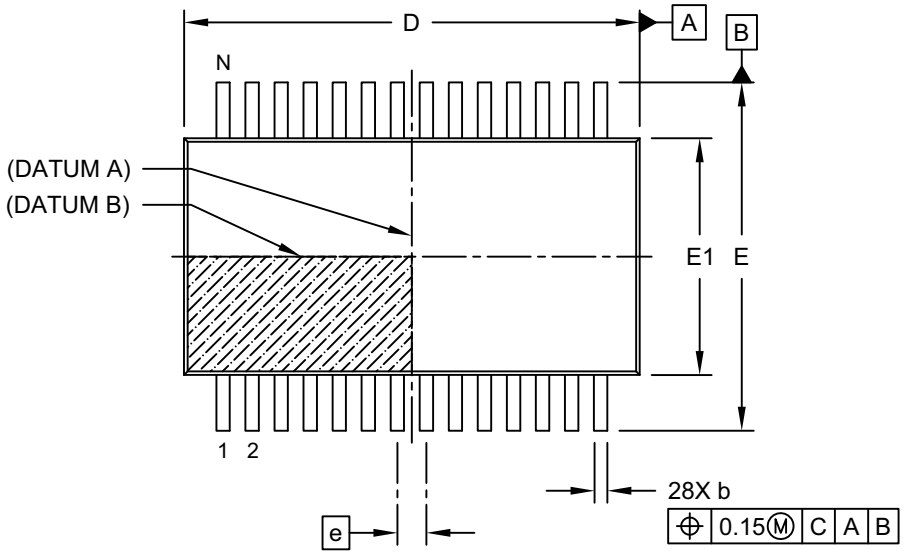

TOP VIEW

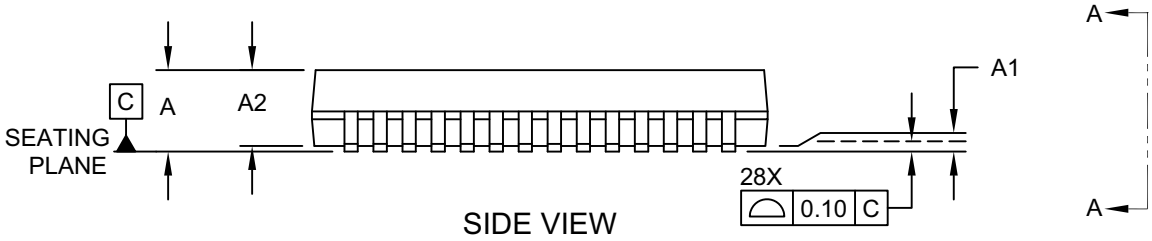

SIDE VIEW

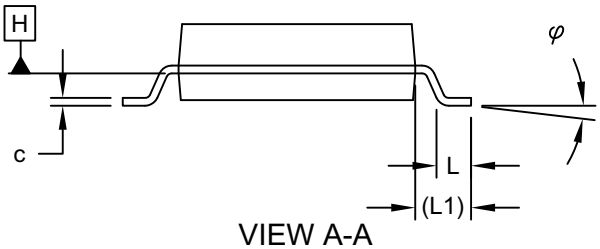

VIEW A-A

Microchip Technology Drawing C04-073 Rev C Sheet 1 of 2

© 2013-2020 Microchip Technology Inc.

28-Lead Plastic Shrink Small Outline (SS) - 5.30 mm Body [SSOP]

Note: For the most current package drawings, please see the Microchip Packaging Specification located at http://www.microchip.com/packaging

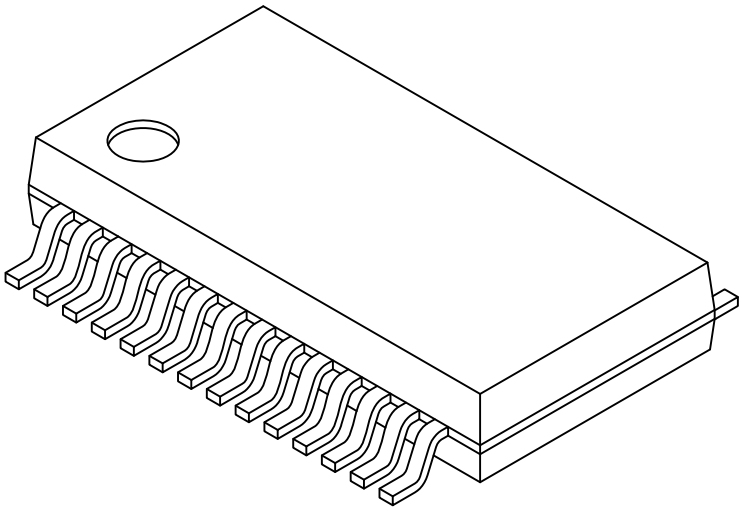

Units		MILLIMETERS		
Dimension Limits		MIN	NOM	MAX
Number of Pins	N	28		
Pitch	e	0.65 BSC		
Overall Height	A	-	-	2.00
Molded Package Thickness	A2	1.65	1.75	1.85
Standoff	A1	0.05	-	-
Overall Width	E	7.40	7.80	8.20
Molded Package Width	E1	5.00	5.30	5.60
Overall Length	D	9.90	10.20	10.50
Foot Length	L	0.55	0.75	0.95
Footprint	L1	1.25 REF		
Lead Thickness	c	0.09	-	0.25
Foot Angle	φ	0°	4°	8°
Lead Width	b	0.22	-	0.38

Notes:

1. Pin 1 visual index feature may vary, but must be located within the hatched area.
2. Dimensions D and E1 do not include mold flash or protrusions. Mold flash or protrusions shall not exceed 0.20mm per side.
3. Dimensioning and tolerancing per ASME Y14.5M

   BSC: Basic Dimension. Theoretically exact value shown without tolerances.

   REF: Reference Dimension, usually without tolerance, for information purposes only.

Microchip Technology Drawing C04-073 Rev C Sheet 2 of 2

28-Lead Plastic Shrink Small Outline (SS) - 5.30 mm Body [SSOP]

Note: For the most current package drawings, please see the Microchip Packaging Specification located at http://www.microchip.com/packaging

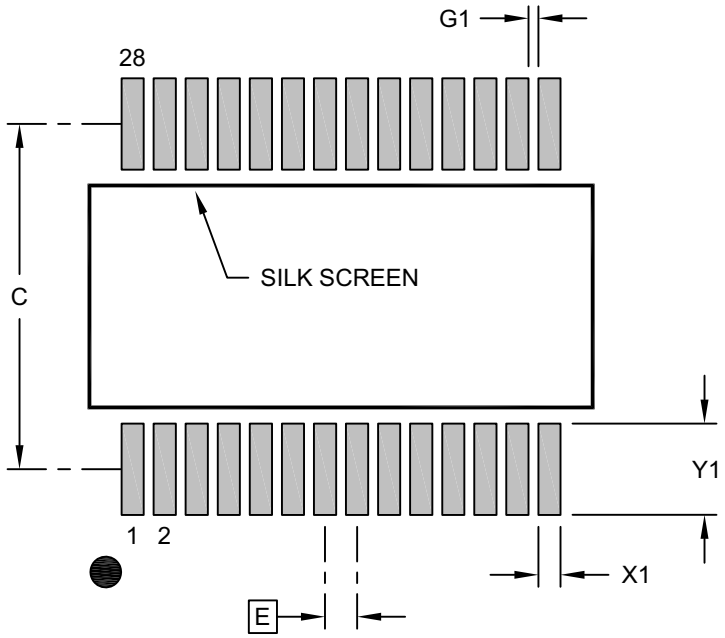

RECOMMENDED LAND PATTERN

Units		MILLIMETERS		
Dimension Limits		MIN	NOM	MAX
Contact Pitch	E	0.65 BSC		
Contact Pad Spacing	C		7.00	
Contact Pad Width (X28)	X1			0.45
Contact Pad Length (X28)	Y1			1.85
Contact Pad to Center Pad (X26)	G1	0.20		

Notes:

1. Dimensioning and tolerancing per ASME Y14.5M
   BSC: Basic Dimension. Theoretically exact value shown without tolerances.
2. For best soldering results, thermal vias, if used, should be filled or tented to avoid solder loss during reflow process

Microchip Technology Drawing C04-2073 Rev B

© 2013-2020 Microchip Technology Inc.

40-Lead Ultra Thin Plastic Quad Flat, No Lead Package (MV) – 5x5x0.5 mm Body [UQFN]

Note: For the most current package drawings, please see the Microchip Packaging Specification located at http://www.microchip.com/packaging

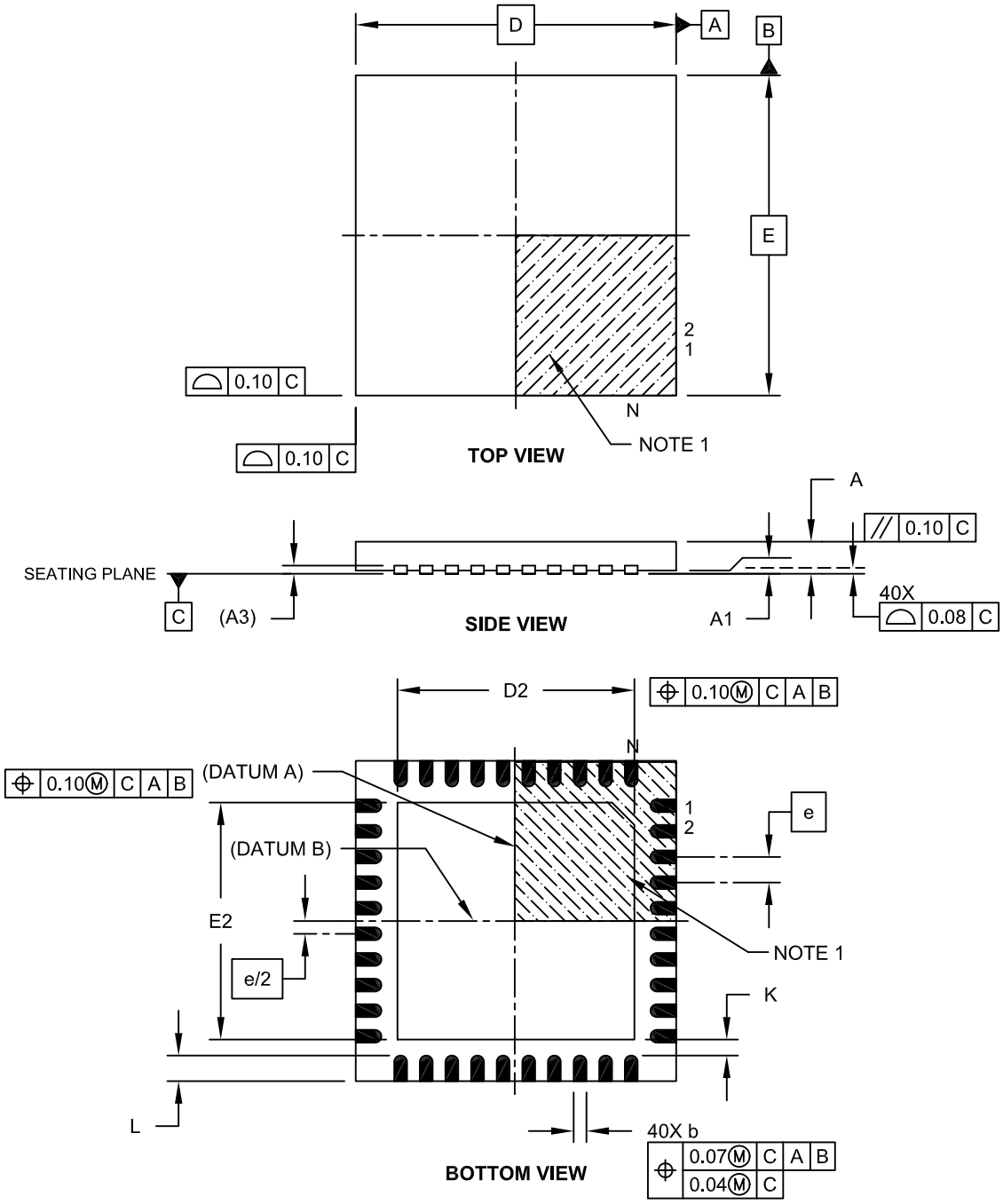

Microchip Technology Drawing C04-156A Sheet 1 of 2

40-Lead Ultra Thin Plastic Quad Flat, No Lead Package (MV) – 5x5x0.5 mm Body [UQFN]

Note: For the most current package drawings, please see the Microchip Packaging Specification located at http://www.microchip.com/packaging

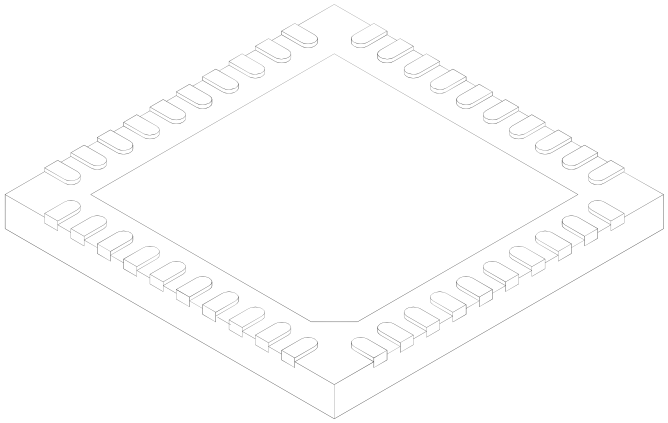

Units		MILLIMETERS		
Dimension Limits		MIN	NOM	MAX
Number of Pins	N	40		
Pitch	e	0.40 BSC		
Overall Height	A	0.45	0.50	0.55
Standoff	A1	0.00	0.02	0.05
Contact Thickness	A3	0.127 REF		
Overall Width	E	5.00 BSC		
Exposed Pad Width	E2	3.60	3.70	3.80
Overall Length	D	5.00 BSC		
Exposed Pad Length	D2	3.60	3.70	3.80
Contact Width	b	0.15	0.20	0.25
Contact Length	L	0.30	0.40	0.50
Contact-to-Exposed Pad	K	0.20	-	-

Notes:

1. Pin 1 visual index feature may vary, but must be located within the hatched area.
2. Package is saw singulated.
3. Dimensioning and tolerancing per ASME Y14.5M.
   BSC: Basic Dimension. Theoretically exact value shown without tolerances.
   REF: Reference Dimension, usually without tolerance, for information purposes only.

Microchip Technology Drawing C04-156A Sheet 2 of 2

© 2013-2020 Microchip Technology Inc.

40-Lead Plastic Ultra Thin Quad Flat, No Lead Package (MV) - 5x5 mm Body [UQFN]

Note: For the most current package drawings, please see the Microchip Packaging Specification located at http://www.microchip.com/packaging

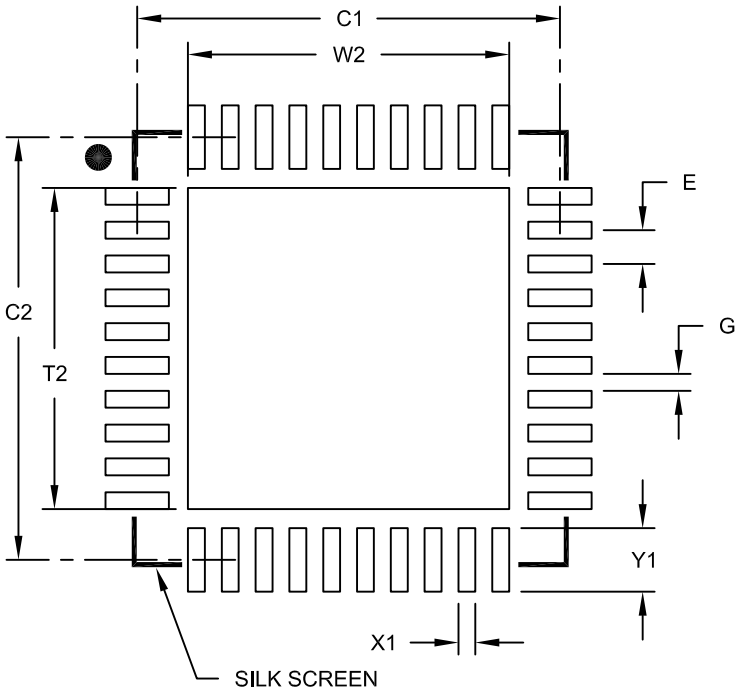

RECOMMENDED LAND PATTERN

Units		MILLIMETERS		
Dimension Limits		MIN	NOM	MAX
Contact Pitch	E		0.40 BSC	
Optional Center Pad Width	W2			3.80
Optional Center Pad Length	T2			3.80
Contact Pad Spacing	C1		5.00	
Contact Pad Spacing	C2		5.00	
Contact Pad Width (X40)	X1			0.20
Contact Pad Length (X40)	Y1			0.75
Distance Between Pads	G	0.20		

Notes:

1. Dimensioning and tolerancing per ASME Y14.5M

   BSC: Basic Dimension. Theoretically exact value shown without tolerances.

Microchip Technology Drawing No. C04-2156B

NOTES:

© 2013-2020 Microchip Technology Inc.

APPENDIX A: REVISION HISTORY

Revision C (January 2020)

- Updated Offset Error and Gain Error in Table 1-1.

Revision B (April 2019)

- Updated **Section 5.7, Power-on Reset**.

Revision A (October 2013)

- Original Release of this Document.

NOTES:

PRODUCT IDENTIFICATION SYSTEM

To order or obtain information, e.g., on pricing or delivery, refer to the factory or the listed sales office.

PART NO.	[X](1)	X	/XX
Device	Tape and Reel	Temperature Range	Package

Device: MCP3913: Six-Channel Analog Front-End Converter

Address Options:

XX		A6	A5
A0	=	0	0
A1*	=	0	1
A2	=	1	0
A3	=	1	1

* Default option. Contact Microchip factory for other address options.

Tape and Reel Option: Blank = Standard packaging (tube or tray)
T = Tape and Reel(1)

Temperature Range: E = -40°C to +125°C

Package: MV = Ultra Thin Plastic Quad Flat, No Lead (UQFN)
SS = Plastic Shrink Small Outline (SSOP)

Examples:

a) MCP3913A1-E/SS: Extended Temperature, 28-Lead SSOP package

b) MCP3913A1T-E/SS: Tape and Reel, Extended Temperature, 28-Lead SSOP package

c) MCP3913A1-E/MV: Extended Temperature, 40-Lead UQFN package

d) MCP3913A1T-E/MV: Tape and Reel, Extended Temperature, 40-Lead UQFN package

Note 1: Tape and Reel identifier only appears in the catalog part number description. This identifier is used for ordering purposes and is not printed on the device package. Check with your Microchip sales office for package availability for the Tape and Reel option.

NOTES:

Note the following details of the code protection feature on Microchip devices:

- Microchip products meet the specification contained in their particular Microchip Data Sheet.
- Microchip believes that its family of products is one of the most secure families of its kind on the market today, when used in the intended manner and under normal conditions.
- There are dishonest and possibly illegal methods used to breach the code protection feature. All of these methods, to our knowledge, require using the Microchip products in a manner outside the operating specifications contained in Microchip's Data Sheets. Most likely, the person doing so is engaged in theft of intellectual property.
- Microchip is willing to work with the customer who is concerned about the integrity of their code.
- Neither Microchip nor any other semiconductor manufacturer can guarantee the security of their code. Code protection does not mean that we are guaranteeing the product as "unbreakable."

Code protection is constantly evolving. We at Microchip are committed to continuously improving the code protection features of our products. Attempts to break Microchip's code protection feature may be a violation of the Digital Millennium Copyright Act. If such acts allow unauthorized access to your software or other copyrighted work, you may have a right to sue for relief under that Act.

Information contained in this publication regarding device applications and the like is provided only for your convenience and may be superseded by updates. It is your responsibility to ensure that your application meets with your specifications. MICROCHIP MAKES NO REPRESENTATIONS OR WARRANTIES OF ANY KIND WHETHER EXPRESS OR IMPLIED, WRITTEN OR ORAL, STATUTORY OR OTHERWISE, RELATED TO THE INFORMATION, INCLUDING BUT NOT LIMITED TO ITS CONDITION, QUALITY, PERFORMANCE, MERCHANTABILITY OR FITNESS FOR PURPOSE**.** Microchip disclaims all liability arising from this information and its use. Use of Microchip devices in life support and/or safety applications is entirely at the buyer's risk, and the buyer agrees to defend, indemnify and hold harmless Microchip from any and all damages, claims, suits, or expenses resulting from such use. No licenses are conveyed, implicitly or otherwise, under any Microchip intellectual property rights unless otherwise stated.

For information regarding Microchip's Quality Management Systems, please visit www.microchip.com/quality.

Trademarks

The Microchip name and logo, the Microchip logo, Adaptec, AnyRate, AVR, AVR logo, AVR Freaks, BesTime, BitCloud, chipKIT, chipKIT logo, CryptoMemory, CryptoRF, dsPIC, FlashFlex, flexPWR, HELDO, IGLOO, JukeBlox, KeeLoq, Kleer, LANCheck, LinkMD, maXStylus, maXTouch, MediaLB, megaAVR, Microsemi, Microsemi logo, MOST, MOST logo, MPLAB, OptoLyzer, PackeTime, PIC, picoPower, PICSTART, PIC32 logo, PolarFire, Prochip Designer, QTouch, SAM-BA, SenGenuity, SpyNIC, SST, SST Logo, SuperFlash, Symmetricom, SyncServer, Tachyon, TempTrackr, TimeSource, tinyAVR, UNI/O, Vectron, and XMEGA are registered trademarks of Microchip Technology Incorporated in the U.S.A. and other countries.

APT, ClockWorks, The Embedded Control Solutions Company, EtherSynch, FlashTec, Hyper Speed Control, HyperLight Load, IntelliMOS, Libero, motorBench, mTouch, Powermite 3, Precision Edge, ProASIC, ProASIC Plus, ProASIC Plus logo, Quiet-Wire, SmartFusion, SyncWorld, Temux, TimeCesium, TimeHub, TimePictra, TimeProvider, Vite, WinPath, and ZL are registered trademarks of Microchip Technology Incorporated in the U.S.A.

Adjacent Key Suppression, AKS, Analog-for-the-Digital Age, Any Capacitor, AnyIn, AnyOut, BlueSky, BodyCom, CodeGuard, CryptoAuthentication, CryptoAutomotive, CryptoCompanion, CryptoController, dsPICDEM, dsPICDEM.net, Dynamic Average Matching, DAM, ECAN, EtherGREEN, In-Circuit Serial Programming, ICSP, INICnet, Inter-Chip Connectivity, JitterBlocker, KleerNet, KleerNet logo, memBrain, Mindi, MiWi, MPASM, MPF, MPLAB Certified logo, MPLIB, MPLINK, MultiTRAK, NetDetach, Omniscient Code Generation, PICDEM, PICDEM.net, PICkit, PICtail, PowerSmart, PureSilicon, QMatrix, REAL ICE, Ripple Blocker, SAM-ICE, Serial Quad I/O, SMART-I.S., SQI, SuperSwitcher, SuperSwitcher II, Total Endurance, TSHARC, USBCheck, VariSense, ViewSpan, WiperLock, Wireless DNA, and ZENA are trademarks of Microchip Technology Incorporated in the U.S.A. and other countries.

SQTP is a service mark of Microchip Technology Incorporated in the U.S.A.
The Adaptec logo, Frequency on Demand, Silicon Storage Technology, and Symmcom are registered trademarks of Microchip Technology Inc. in other countries.
GestIC is a registered trademark of Microchip Technology Germany II GmbH & Co. KG, a subsidiary of Microchip Technology Inc., in other countries.
All other trademarks mentioned herein are property of their respective companies.

© 2013-2020, Microchip Technology Incorporated, All Rights Reserved.

ISBN: 978-1-5224-5516-5

Worldwide Sales and Service

AMERICAS

Corporate Office
2355 West Chandler Blvd.
Chandler, AZ 85224-6199
Tel: 480-792-7200
Fax: 480-792-7277
Technical Support:
http://www.microchip.com/support
Web Address:
www.microchip.com

Atlanta
Duluth, GA
Tel: 678-957-9614
Fax: 678-957-1455

Austin, TX
Tel: 512-257-3370

Boston
Westborough, MA
Tel: 774-760-0087
Fax: 774-760-0088

Chicago
Itasca, IL
Tel: 630-285-0071
Fax: 630-285-0075

Dallas
Addison, TX
Tel: 972-818-7423
Fax: 972-818-2924

Detroit
Novi, MI
Tel: 248-848-4000

Houston, TX
Tel: 281-894-5983

Indianapolis
Noblesville, IN
Tel: 317-773-8323
Fax: 317-773-5453
Tel: 317-536-2380

Los Angeles
Mission Viejo, CA
Tel: 949-462-9523
Fax: 949-462-9608
Tel: 951-273-7800

Raleigh, NC
Tel: 919-844-7510

New York, NY
Tel: 631-435-6000

San Jose, CA
Tel: 408-735-9110
Tel: 408-436-4270

Canada - Toronto
Tel: 905-695-1980
Fax: 905-695-2078

ASIA/PACIFIC

Australia - Sydney
Tel: 61-2-9868-6733

China - Beijing
Tel: 86-10-8569-7000

China - Chengdu
Tel: 86-28-8665-5511

China - Chongqing
Tel: 86-23-8980-9588

China - Dongguan
Tel: 86-769-8702-9880

China - Guangzhou
Tel: 86-20-8755-8029

China - Hangzhou
Tel: 86-571-8792-8115

China - Hong Kong SAR
Tel: 852-2943-5100

China - Nanjing
Tel: 86-25-8473-2460

China - Qingdao
Tel: 86-532-8502-7355

China - Shanghai
Tel: 86-21-3326-8000

China - Shenyang
Tel: 86-24-2334-2829

China - Shenzhen
Tel: 86-755-8864-2200

China - Suzhou
Tel: 86-186-6233-1526

China - Wuhan
Tel: 86-27-5980-5300

China - Xian
Tel: 86-29-8833-7252

China - Xiamen
Tel: 86-592-2388138

China - Zhuhai
Tel: 86-756-3210040

ASIA/PACIFIC

India - Bangalore
Tel: 91-80-3090-4444

India - New Delhi
Tel: 91-11-4160-8631

India - Pune
Tel: 91-20-4121-0141

Japan - Osaka
Tel: 81-6-6152-7160

Japan - Tokyo
Tel: 81-3-6880- 3770

Korea - Daegu
Tel: 82-53-744-4301

Korea - Seoul
Tel: 82-2-554-7200

Malaysia - Kuala Lumpur
Tel: 60-3-7651-7906

Malaysia - Penang
Tel: 60-4-227-8870

Philippines - Manila
Tel: 63-2-634-9065

Singapore
Tel: 65-6334-8870

Taiwan - Hsin Chu
Tel: 886-3-577-8366

Taiwan - Kaohsiung
Tel: 886-7-213-7830

Taiwan - Taipei
Tel: 886-2-2508-8600

Thailand - Bangkok
Tel: 66-2-694-1351

Vietnam - Ho Chi Minh
Tel: 84-28-5448-2100

EUROPE

Austria - Wels
Tel: 43-7242-2244-39
Fax: 43-7242-2244-393

Denmark - Copenhagen
Tel: 45-4450-2828
Fax: 45-4485-2829

Finland - Espoo
Tel: 358-9-4520-820

France - Paris
Tel: 33-1-69-53-63-20
Fax: 33-1-69-30-90-79

Germany - Garching
Tel: 49-8931-9700

Germany - Haan
Tel: 49-2129-3766400

Germany - Heilbronn
Tel: 49-7131-72400

Germany - Karlsruhe
Tel: 49-721-625370

Germany - Munich
Tel: 49-89-627-144-0
Fax: 49-89-627-144-44

Germany - Rosenheim
Tel: 49-8031-354-560

Israel - Ra'anana
Tel: 972-9-744-7705

Italy - Milan
Tel: 39-0331-742611
Fax: 39-0331-466781

Italy - Padova
Tel: 39-049-7625286

Netherlands - Drunen
Tel: 31-416-690399
Fax: 31-416-690340

Norway - Trondheim
Tel: 47-7288-4388

Poland - Warsaw
Tel: 48-22-3325737

Romania - Bucharest
Tel: 40-21-407-87-50

Spain - Madrid
Tel: 34-91-708-08-90
Fax: 34-91-708-08-91

Sweden - Gothenberg
Tel: 46-31-704-60-40

Sweden - Stockholm
Tel: 46-8-5090-4654

UK - Wokingham
Tel: 44-118-921-5800
Fax: 44-118-921-5820

© 2013-2020 Microchip Technology Inc.

Mouser Electronics

Authorized Distributor

Click to View Pricing, Inventory, Delivery & Lifecycle Information:

Microchip:

MCP3913A1T-E/SS MCP3913A1-E/MV MCP3913A1-E/SS MCP3913A1T-E/MV