KSZ9021GQ

Gigabit Ethernet Transceiver with GMII/MII Support

Highlights

- Single-chip 10/100/1000Mbps IEEE 802.3 compliant Ethernet Transceiver
- GMII/MII standard compliant interface
- Auto-negotiation to automatically select the highest link up speed (10/100/100Mbps) and duplex (half/full)
- On-chip termination resistors for the differential pairs
- On-chip LDO controller to support single 3.3V supply operation – requires only external FET to generate 1.2V for the core
- Jumbo frame support up to 16KB
- 125MHz Reference Clock Output
- Programmable LED outputs for link, activity and speed
- Baseline Wander Correction
- LinkMD® TDR-based cable diagnostics for identification of faulty copper cabling
- Parametric NAND Tree support for fault detection between chip I/Os and board.
- Loopback modes for diagnostics
- Automatic MDI/MDI-X crossover for detection and correction of pair swap at all speeds of operation
- Automatic detection and correction of pair swaps, pair skew and pair polarity
- MDC/MDIO Management Interface for PHY register configuration
- Interrupt pin option
- Power down and power saving modes
- Operating Voltages
  - Core: 1.2V (external FET or regulator)
  - I/O: 3.3V or 2.5V
  - Transceiver: 3.3V
- Available in 128-pin PQFP (14mm x 20mm) package

Applications

- Laser/Network Printer
- Network Attached Storage (NAS)
- Network Server
- Gigabit LAN on Motherboard (GLOM)
- Broadband Gateway
- Gigabit SOHO/SMB Router
- IPTV
- IP Set-top Box
- Game Console
- Triple-play (data, voice, video) Media Center
- Media Converter

© 2009-2019 Microchip Technology Inc.

TO OUR VALUED CUSTOMERS

It is our intention to provide our valued customers with the best documentation possible to ensure successful use of your Microchip products. To this end, we will continue to improve our publications to better suit your needs. Our publications will be refined and enhanced as new volumes and updates are introduced.

If you have any questions or comments regarding this publication, please contact the Marketing Communications Department via E-mail at **docerrors@microchip.com**. We welcome your feedback.

Most Current Data Sheet

To obtain the most up-to-date version of this data sheet, please register at our Worldwide Web site at:

http://www.microchip.com

You can determine the version of a data sheet by examining its literature number found on the bottom outside corner of any page. The last character of the literature number is the version number, (e.g., DS30000000A is version A of document DS30000000).

Errata

An errata sheet, describing minor operational differences from the data sheet and recommended workarounds, may exist for current devices. As device/documentation issues become known to us, we will publish an errata sheet. The errata will specify the revision of silicon and revision of document to which it applies.

To determine if an errata sheet exists for a particular device, please check with one of the following:

- Microchip's Worldwide Web site; http://www.microchip.com
- Your local Microchip sales office (see last page)

When contacting a sales office, please specify which device, revision of silicon and data sheet (include -literature number) you are using.

Customer Notification System

Register on our web site at **www.microchip.com** to receive the most current information on all of our products.

© 2009-2019 Microchip Technology Inc.

Table of Contents

1.0 Introduction 4
2.0 Pin Description and Configuration 5
3.0 Functional Overview 18
4.0 Register Map 33
5.0 Operational Characteristics 44
6.0 Timing Diagrams 47
7.0 Package Information 57
Appendix A: Data Sheet Revision History 58
The Microchip Web Site 59
Customer Change Notification Service 59
Customer Support 59
Product Identification System 60

1.0 INTRODUCTION

1.1 General Description

The KSZ9021GQ is a completely integrated triple speed (10Base-T/100Base-TX/1000Base-T) Ethernet Physical Layer Transceiver for transmission and reception of data on standard CAT-5 unshielded twisted pair (UTP) cable.

The KSZ9021GQ provides the industry standard GMII/MII (Gigabit Media Independent Interface / Media Independent Interface) for direct connection to GMII/MII MACs in Gigabit Ethernet Processors and Switches for data transfer at 1000 Mbps or 10/100Mbps speed.

The KSZ9021GQ reduces board cost and simplifies board layout by using on-chip termination resistors for the four differential pairs and by integrating a LDO controller to drive a low cost MOSFET to supply the 1.2V core.

The KSZ9021GQ provides diagnostic features to facilitate system bring-up and debugging in production testing and in product deployment. Parametric NAND tree support enables fault detection between KSZ9021 I/Os and board. Microchip LinkMD® TDR-based cable diagnostics permit identification of faulty copper cabling. Remote and local loopback functions provide verification of analog and digital data paths.

The KSZ9021GQ is available in a 128-pin, RoHS Compliant PQFP package (See Product Identification System on page 60).

1.2 Functional Diagram

FIGURE 1-1: KSZ9021GQ FUNCTIONAL DIAGRAM

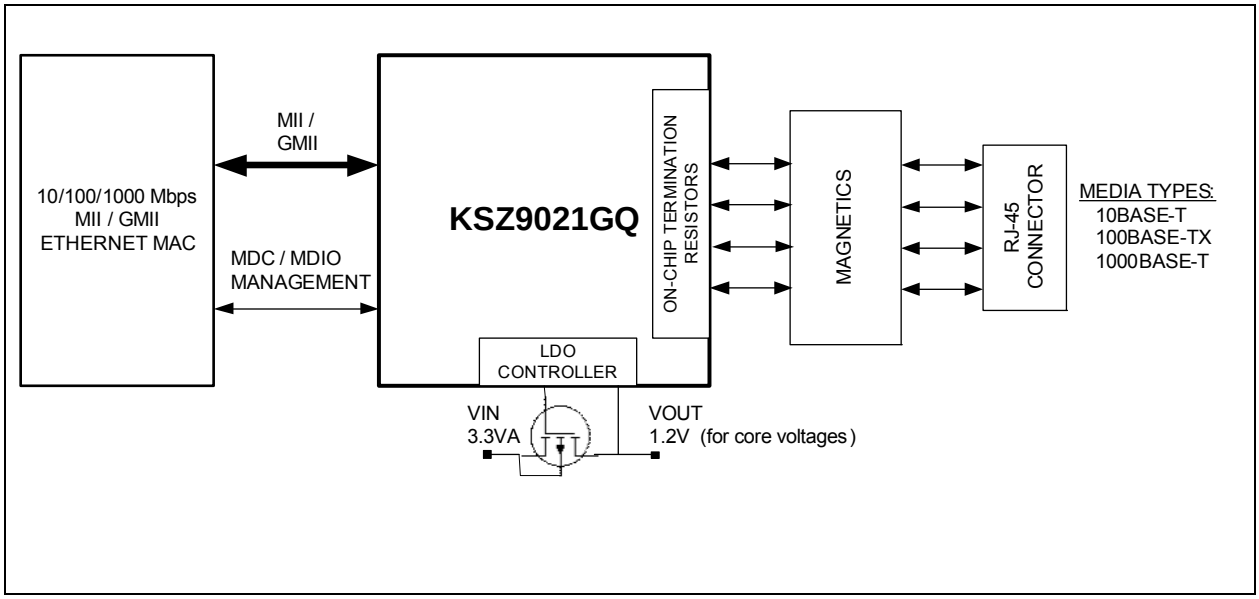

© 2009-2019 Microchip Technology Inc.

2.0 PIN DESCRIPTION AND CONFIGURATION

2.1 Pin Diagram

FIGURE 2-1: 128-PIN PQFP (TOP VIEW)

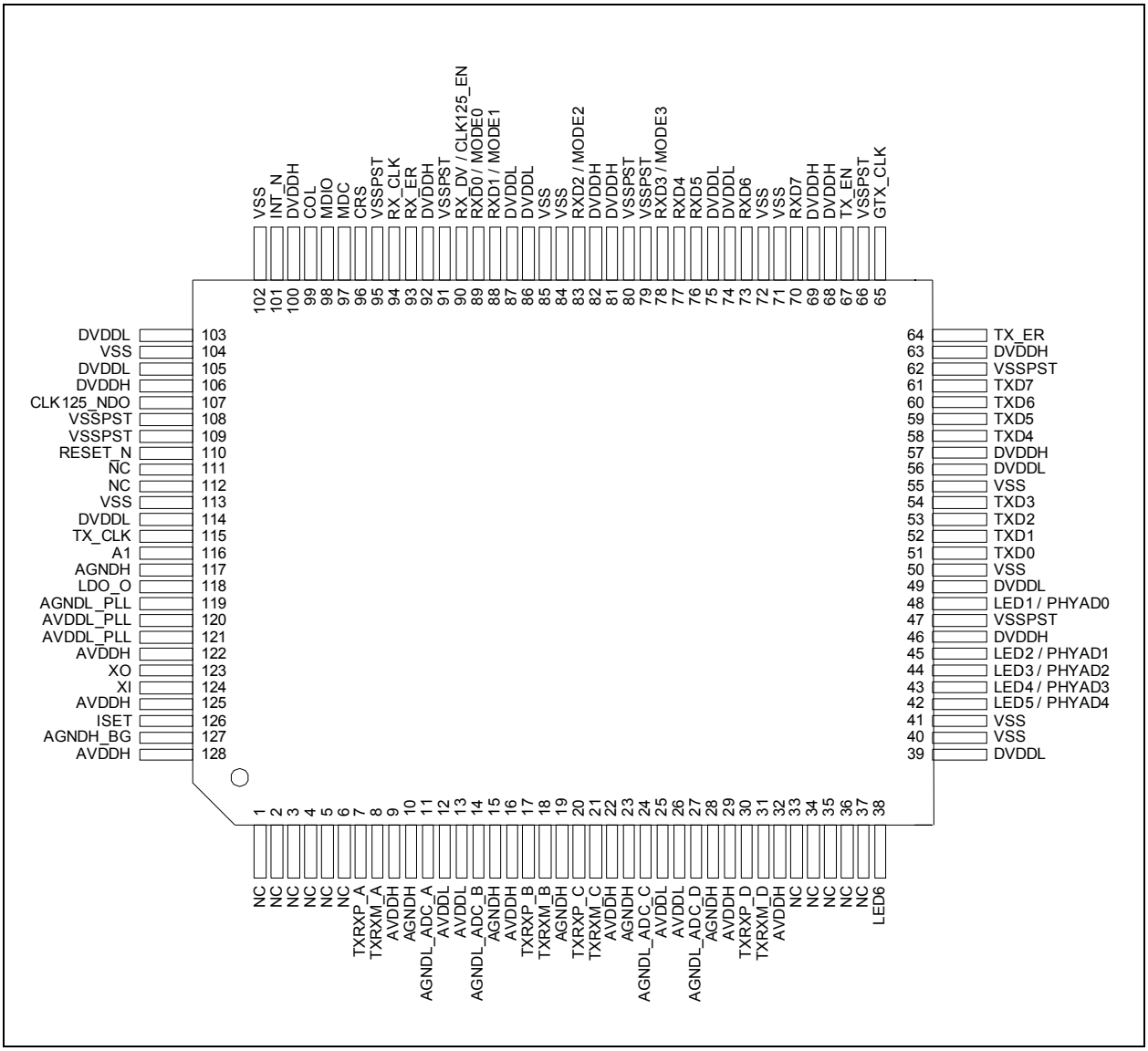

2.2 Pin Description

Pin Number	Pin Name	Type (Note 1)	Pin Function
1	NC	-	No connect
2	NC	-	No connect
3	NC	-	No connect
4	NC	-	No connect
5	NC	-	No connect
6	NC	-	No connect
7	TXRXP_A	I/O	Media Dependent Interface[0], positive signal of differential pair 1000Base-T Mode: TXRXP_A corresponds to BI_DA+ for MDI configuration and BI_DB+ for MDI-X configuration, respectively. 10Base-T / 100Base-TX Mode: TXRXP_A is the positive transmit signal (TX+) for MDI configuration and the positive receive signal (RX+) for MDI-X configuration, respectively.
8	TXRXM_A	I/O	Media Dependent Interface[0], negative signal of differential pair 1000Base-T Mode: TXRXM_A corresponds to BI_DA- for MDI configuration and BI_DB- for MDI-X configuration, respectively. 10Base-T / 100Base-TX Mode: TXRXM_A is the negative transmit signal (TX-) for MDI configuration and the negative receive signal (RX-) for MDI-X configuration, respectively.
9	AVDDH	P	3.3V analog V_{DD}
10	AGNDH	Gnd	Analog ground
11	AGNDL_ADC_A	Gnd	Analog ground
12	AVDDL	P	1.2V analog V_{DD}
13	AVDDL	P	1.2V analog V_{DD}
14	AGNDL_ADC_B	Gnd	Analog ground
15	AGNDH	Gnd	Analog ground
16	AVDDH	P	3.3V analog V_{DD}
17	TXRXP_B	I/O	Media Dependent Interface[1], positive signal of differential pair 1000Base-T Mode: TXRXP_B corresponds to BI_DB+ for MDI configuration and BI_DA+ for MDI-X configuration, respectively. 10Base-T / 100Base-TX Mode: TXRXP_B is the positive receive signal (RX+) for MDI configuration and the positive transmit signal (TX+) for MDI-X configuration, respectively.

© 2009-2019 Microchip Technology Inc.

Pin Number	Pin Name	Type (Note 1)	Pin Function
18	TXRXM_B	I/O	Media Dependent Interface[1], negative signal of differential pair 1000Base-T Mode: TXRXM_B corresponds to BI_DB- for MDI configuration and BI_DA- for MDI-X configuration, respectively. 10Base-T / 100Base-TX Mode: TXRXM_B is the negative receive signal (RX-) for MDI configuration and the negative transmit signal (TX-) for MDI-X configuration, respectively.
19	AGNDH	Gnd	Analog ground
20	TXRXP_C	I/O	Media Dependent Interface[2], positive signal of differential pair 1000Base-T Mode: TXRXP_C corresponds to BI_DC+ for MDI configuration and BI_DD+ for MDI-X configuration, respectively. 10Base-T / 100Base-TX Mode: TXRXP_C is not used.
21	TXRXM_C	I/O	Media Dependent Interface[2], negative signal of differential pair 1000Base-T Mode: TXRXM_C corresponds to BI_DC- for MDI configuration and BI_DD- for MDI-X configuration, respectively. 10Base-T / 100Base-TX Mode: TXRXM_C is not used.
22	AVDDH	P	3.3V analog V_{DD}
23	AGNDH	Gnd	Analog ground
24	AGNDL_ADC_C	Gnd	Analog ground
25	AVDDL	P	1.2V analog V_{DD}
26	AVDDL	P	1.2V analog V_{DD}
27	AGNDL_ADC_D	Gnd	Analog ground
28	AGNDH	Gnd	Analog ground
29	AVDDH	P	3.3V analog V_{DD}
30	TXRXP_D	I/O	Media Dependent Interface[3], positive signal of differential pair 1000Base-T Mode: TXRXP_D corresponds to BI_DD+ for MDI configuration and BI_DC+ for MDI-X configuration, respectively. 10Base-T / 100Base-TX Mode: TXRXP_D is not used.
31	TXRXM_D	I/O	Media Dependent Interface[3], negative signal of differential pair 1000Base-T Mode: TXRXM_D corresponds to BI_DD- for MDI configuration and BI_DC- for MDI-X configuration, respectively. 10Base-T / 100Base-TX Mode: TXRXM_D is not used.
32	AVDDH	P	3.3V analog V_{DD}
33	NC	-	No connect
34	NC	-	No connect
35	NC	-	No connect
36	NC	-	No connect

<table>
<tr><th>Pin Number</th><th>Pin Name</th><th>Type (Note 1)</th><th>Pin Function</th></tr>
<tr><td>37</td><td>NC</td><td>-</td><td>No connect</td></tr>
<tr><td>38</td><td>LED6</td><td>I/O</td><td>LED Output:
Programmable LED6 Output
The LED6 pin is programmed via register 11h bits [7:6], LED_SEL[1:0], and is defined as followed:

LED_SEL[1:0] = (1,1) // 6-LED Configuration (default)
LED_SEL[1:0] = (0,1) // 5-LED Configuration
<table>
<tr><th>10Base-T-Link</th><th>Pin State</th><th>LED Definition</th></tr>
<tr><td>Link off</td><td>H</td><td>OFF</td></tr>
<tr><td>Link on</td><td>L</td><td>ON</td></tr>
</table>
LED_SEL[1:0] = (1,0) // 4-LED Configuration
<table>
<tr><th>10Base-T-Link / Activity</th><th>Pin State</th><th>LED Definition</th></tr>
<tr><td>Link off</td><td>H</td><td>OFF</td></tr>
<tr><td>Link on</td><td>L</td><td>ON</td></tr>
<tr><td>Activity (RX, TX)</td><td>Toggle</td><td>Blinking</td></tr>
</table>
LED_SEL[1:0] = (0,0) // Reserved – not used</td></tr>
<tr><td>39</td><td>DVDDL</td><td>P</td><td>1.2V digital V_{DD}</td></tr>
<tr><td>40</td><td>VSS</td><td>Gnd</td><td>Digital ground</td></tr>
<tr><td>41</td><td>VSS</td><td>Gnd</td><td>Digital ground</td></tr>
</table>

© 2009-2019 Microchip Technology Inc.

<table>
<tr><th>Pin Number</th><th>Pin Name</th><th>Type (Note 1)</th><th>Pin Function</th></tr>
<tr><td>42</td><td>LED5 / PHYAD4</td><td>I/O</td><td>
LED Output:
Programmable LED5 Output /
Configuration Mode:
The pull-up/pull-down value is latched as PHYADD[4] during power-up / reset. See “Strapping Options” section for details.
The LED5 pin is programmed via register 11h bits [7:6], LED_SEL[1:0], and is defined as followed:
LED_SEL[1:0] = (1,1) // 6-LED Configuration (default)
LED_SEL[1:0] = (0,1) // 5-LED Configuration
<table>
<tr><th>100Base-T-Link</th><th>Pin State</th><th>LED Definition</th></tr>
<tr><td>Link off</td><td>H</td><td>OFF</td></tr>
<tr><td>Link on</td><td>L</td><td>ON</td></tr>
</table>
LED_SEL[1:0] = (1,0) // 4-LED Configuration
<table>
<tr><th>100Base-T-Link / Activity</th><th>Pin State</th><th>LED Definition</th></tr>
<tr><td>Link off</td><td>H</td><td>OFF</td></tr>
<tr><td>Link on</td><td>L</td><td>ON</td></tr>
<tr><td>Activity (RX, TX)</td><td>Toggle</td><td>Blinking</td></tr>
</table>
LED_SEL[1:0] = (0,0) // Reserved – not used
</td></tr>
<tr><td>43</td><td>LED4 / PHYAD3</td><td>I/O</td><td>
LED Output:
Programmable LED4 Output /
Configuration Mode:
The pull-up/pull-down value is latched as PHYADD[3] during power-up / reset. See “Strapping Options” section for details.
The LED4 pin is programmed via register 11h bits [7:6], LED_SEL[1:0], and is defined as follows:
LED_SEL[1:0] = (1,1) // 6-LED Configuration (default)
LED_SEL[1:0] = (0,1) // 5-LED Configuration
<table>
<tr><th>1000Base-T-Link</th><th>Pin State</th><th>LED Definition</th></tr>
<tr><td>Link off</td><td>H</td><td>OFF</td></tr>
<tr><td>Link on</td><td>L</td><td>ON</td></tr>
</table>
LED_SEL[1:0] = (1,0) // 4-LED Configuration
<table>
<tr><th>1000Base-T-Link / Activity</th><th>Pin State</th><th>LED Definition</th></tr>
<tr><td>Link off</td><td>H</td><td>OFF</td></tr>
<tr><td>Link on</td><td>L</td><td>ON</td></tr>
<tr><td>Activity (RX, TX)</td><td>Toggle</td><td>Blinking</td></tr>
</table>
LED_SEL[1:0] = (0,0) // Reserved – not used
</td></tr>
</table>

<table>
<tr><th>Pin Number</th><th>Pin Name</th><th>Type (Note 1)</th><th>Pin Function</th></tr>
<tr><td>44</td><td>LED3 / PHYAD2</td><td>I/O</td><td>LED Output:
Programmable LED3 Output /
Configuration Mode:
The pull-up/pull-down value is latched as PHYADD[2] during power-up / reset. See “Strapping Options” section for details.
The LED3 pin is programmed via register 11h bits [7:6], LED_SEL[1:0], and is defined as follows:

LED_SEL[1:0] = (1,1) // 6-LED Configuration (default)
LED_SEL[1:0] = (0,1) // 5-LED Configuration
LED_SEL[1:0] = (0,1) // 4-LED Configuration
<table>
<tr><th>Duplex / Collision</th><th>Pin State</th><th>LED Definition</th></tr>
<tr><td>Half Duplex</td><td>H</td><td>OFF</td></tr>
<tr><td>Full Duplex</td><td>L</td><td>ON</td></tr>
<tr><td>Collision</td><td>Toggle</td><td>Blinking</td></tr>
</table>
LED_SEL[1:0] = (0,0) // Reserved – not used</td></tr>
<tr><td>45</td><td>LED2 / PHYAD1</td><td>I/O</td><td>LED Output:
Programmable LED2 Output /
Configuration Mode:
The pull-up/pull-down value is latched as PHYADD[1] during power-up / reset. See “Strapping Options” section for details.
The LED2 pin is programmed via register 11h bits [7:6], LED_SEL[1:0], and is defined as follows:

LED_SEL[1:0] = (1,1) // 6-LED Configuration (default)
<table>
<tr><th>Receive Activity</th><th>Pin State</th><th>LED Definition</th></tr>
<tr><td>No Receive Activity</td><td>H</td><td>OFF</td></tr>
<tr><td>Receive Activity</td><td>L, Toggle</td><td>ON, Blinking</td></tr>
</table>
LED_SEL[1:0] = (0,1) // Reserved – not used
LED2 pin is internally pulled high.

LED_SEL[1:0] = (1,0) // Reserved – not used
LED2 pin is internally pulled high.

LED_SEL[1:0] = (0,0) // Reserved – not used</td></tr>
<tr><td>46</td><td>DVDDH</td><td>P</td><td>3.3V or 2.5V digital V_{DD}</td></tr>
<tr><td>47</td><td>VSSPST</td><td>Gnd</td><td>Digital ground</td></tr>
</table>

© 2009-2019 Microchip Technology Inc.

<table>
<tr><th>Pin Number</th><th>Pin Name</th><th>Type (Note 1)</th><th>Pin Function</th></tr>
<tr><td>48</td><td>LED1 / PHYAD0</td><td>I/O</td><td>LED Output: Programmable LED1 Output /
Configuration Mode:
The pull-up/pull-down value is latched as PHYADD[0] during power-up / reset. See “Strapping Options” section for details.
The LED1 pin is programmed via register 11h bits [7:6], LED_SEL[1:0], and is defined as follows:
LED_SEL[1:0] = (1,1) // 6-LED Configuration (default)
<table>
<tr><th>Transmit Activity</th><th>Pin State</th><th>LED Definition</th></tr>
<tr><td>No Transmit Activity</td><td>H</td><td>OFF</td></tr>
<tr><td>Transmit Activity</td><td>L, Toggle</td><td>ON, Blinking</td></tr>
</table>
LED_SEL[1:0] = (1,0) // 5-LED Configuration
<table>
<tr><th>Receive /Transmit Activity</th><th>Pin State</th><th>LED Definition</th></tr>
<tr><td>No Receive / Transmit Activity</td><td>H</td><td>OFF</td></tr>
<tr><td>Receive / Transmit Activity</td><td>L, Toggle</td><td>ON, Blinking</td></tr>
</table>
LED_SEL[1:0] = (1,0) // Reserved – not used
LED1 pin is internally pulled high.
LED_SEL[1:0] = (0,0) // Reserved – not used</td></tr>
<tr><td>49</td><td>DVDDL</td><td>P</td><td>1.2V digital V_{DD}</td></tr>
<tr><td>50</td><td>VSS</td><td>Gnd</td><td>Digital ground</td></tr>
<tr><td>51</td><td>TXD0</td><td>I</td><td>GMII Mode:
GMII TXD0 (Transmit Data 0) Input
MII Mode:
MII TXD0 (Transmit Data 0) Input</td></tr>
<tr><td>52</td><td>TXD1</td><td>I</td><td>GMII Mode:
GMII TXD1 (Transmit Data 1) Input
MII Mode:
MII TXD1 (Transmit Data 1) Input</td></tr>
<tr><td>53</td><td>TXD2</td><td>I</td><td>GMII Mode:
GMII TXD2 (Transmit Data 2) Input
MII Mode:
MII TXD2 (Transmit Data 2) Input</td></tr>
<tr><td>54</td><td>TXD3</td><td>I</td><td>GMII Mode:
GMII TXD3 (Transmit Data 3) Input
MII Mode:
MII TXD3 (Transmit Data 3) Input</td></tr>
<tr><td>55</td><td>VSS</td><td>Gnd</td><td>Digital ground</td></tr>
</table>

Pin Number	Pin Name	Type (Note 1)	Pin Function
56	DVDDL	P	1.2V digital V_{DD}
57	DVDDH	P	3.3V or 2.5V digital V_{DD}
58	TXD4	I	GMII Mode: GMII TXD4 (Transmit Data 4) Input MII Mode: This pin is not used and can be driven high or low
59	TXD5	I	GMII Mode: GMII TXD5 (Transmit Data 5) Input MII Mode: This pin is not used and can be driven high or low
60	TXD6	I	GMII Mode: GMII TXD6 (Transmit Data 6) Input MII Mode: This pin is not used and can be driven high or low
61	TXD7	I	GMII Mode: GMII TXD7 (Transmit Data 7) Input MII Mode: This pin is not used and can be driven high or low
62	VSSPST	Gnd	Digital ground
63	DVDDH	P	3.3V or 2.5V digital V_{DD}
64	TX_ER	I	GMII Mode: GMII TX_ER (Transmit Error) Input MII Mode: MII TX_ER (Transmit Error) Input If GMII / MII MAC does not provide the TX_ER output signal, this pin should be tied low.
65	GTX_CLK	I	GMII Mode: GMII GTX_CLK (Transmit Reference Clock) Input
66	VSSPST	Gnd	Digital ground
67	TX_EN	I	GMII Mode: GMII TX_EN (Transmit Enable) Input MII Mode: MII TX_EN (Transmit Enable) Input
68	DVDDH	P	3.3V or 2.5V digital V_{DD}
69	DVDDH	P	3.3V or 2.5V digital V_{DD}
70	RXD7	O	GMII Mode: GMII RXD7 (Receive Data 7) Output MII Mode: This pin is not used and is driven low.
71	VSS	Gnd	Digital ground
72	VSS	Gnd	Digital ground

© 2009-2019 Microchip Technology Inc.

Pin Number	Pin Name	Type (Note 1)	Pin Function
73	RXD6	O	GMII Mode: GMII RXD6 (Receive Data 6) Output MII Mode: This pin is not used and is driven low.
74	DVDDL	P	1.2V digital V_{DD}
75	DVDDL	P	1.2V digital V_{DD}
76	RXD5	O	GMII Mode: GMII RXD5 (Receive Data 5) Output MII Mode: This pin is not used and is driven low.
77	RXD4	O	GMII Mode: GMII RXD4 (Receive Data 4) Output MII Mode: This pin is not used and is driven low.
78	RXD3 / MODE3	I/O	GMII Mode: GMII RXD3 (Receive Data 3) Output MII Mode: MII RXD3 (Receive Data 3) Output / Configuration Mode: The pull-up/pull-down value is latched as MODE3 during power-up / reset. See “Strapping Options” section for details.
79	VSSPST	Gnd	Digital ground
80	VSSPST	Gnd	Digital ground
81	DVDDH	P	3.3V or 2.5V digital V_{DD}
82	DVDDH	P	3.3V or 2.5V digital V_{DD}
83	RXD2 / MODE2	I/O	GMII Mode: GMII RXD2 (Receive Data 2) Output MII Mode: MII RXD2 (Receive Data 2) Output) / Configuration Mode: The pull-up/pull-down value is latched as MODE2 during power-up / reset. See “Strapping Options” section for details.
84	VSS	Gnd	Digital ground
85	VSS	Gnd	Digital ground
86	DVDDL	P	1.2V digital V_{DD}
87	DVDDL	P	1.2V digital V_{DD}
88	RXD1 / MODE1	I/O	GMII Mode: GMII RXD1 (Receive Data 1) Output MII Mode: MII RXD1 (Receive Data 1) Output / Configuration Mode: The pull-up/pull-down value is latched as MODE1 during power-up / reset. See “Strapping Options” section for details.

Pin Number	Pin Name	Type (Note 1)	Pin Function
89	RXD0 / MODE0	I/O	GMII Mode: GMII RXD0 (Receive Data 0) Output MII Mode: MII RXD0 (Receive Data 0) Output / Configuration Mode: The pull-up/pull-down value is latched as MODE0 during power-up / reset. See “Strapping Options” section for details.
90	RX_DV / CLK125_EN	I/O	GMII Mode: GMII RX_DV (Receive Data Valid) Output MII Mode: MII RX_DV (Receive Data Valid) Output / Configuration Mode: Latched as CLK125_NDO Output Enable during power-up / reset. See “Strapping Options” section for details.
91	VSSPST	Gnd	Digital ground
92	DVDDH	P	3.3V or 2.5V digital V_{DD}
93	RX_ER	O	GMII Mode: GMII RX_ER (Receive Error) Output MII Mode: MII RX_ER (Receive Error) Output
94	RX_CLK	O	GMII Mode: GMII RX_CLK (Receive Reference Clock) Output MII Mode: MII RX_CLK (Receive Reference Clock) Output
95	VSSPST	Gnd	Digital ground
96	CRS	O	GMII Mode: GMII CRS (Carrier Sense) Output MII Mode: MII CRS (Carrier Sense) Output
97	MDC	Ipu	Management Data Clock Input This pin is the input reference clock for MDIO (pin 98).
98	MDIO	Ipu/O	Management Data Input / Output This pin is synchronous to MDC (pin 97) and requires an external pull-up resistor to DVDDH (digital V_{DD}) in a range from 1.0KΩ to 4.7KΩ.
99	COL	O	GMII Mode: GMII COL (Collision Detected) Output MII Mode: MII COL (Collision Detected) Output
100	DVDDH	P	3.3V or 2.5V digital V_{DD}

© 2009-2019 Microchip Technology Inc.

Pin Number	Pin Name	Type (Note 1)	Pin Function
101	INT_N	O	Interrupt Output This pin provides a programmable interrupt output and requires an external pull-up resistor to DVDDH (digital V_{DD}) in a range from 1.0KΩ to 4.7KΩ when active low. Register 1Bh is the Interrupt Control/Status Register for programming the interrupt conditions and reading the interrupt status. Register 1Fh bit 14 sets the interrupt output to active low (default) or active high.
102	VSS	Gnd	Digital ground
103	DVDDL	P	1.2V digital V_{DD}
104	VSS	Gnd	Digital ground
105	DVDDL	P	1.2V digital V_{DD}
106	DVDDH	P	3.3V or 2.5V digital V_{DD}
107	CLK125_NDO	O	125MHz Clock Output This pin provides a 125MHz reference clock output option for use by the MAC.
108	VSSPST	Gnd	Digital ground
109	VSSPST	Gnd	Digital ground
110	RESET_N	Ipu	Chip Reset (active low) Hardware pin configurations are strapped-in at the de-assertion (rising edge) of RESET_N. See “Strapping Options” section for more details.
111	NC	-	No connect
112	NC	-	No connect
113	VSS	Gnd	Digital ground
114	DVDDL	P	1.2V digital V_{DD}
115	TX_CLK	O	MII Mode: MII TX_CLK (Transmit Reference Clock) Output
116	A1	I	Factory test pin – float for normal operation
117	AGNDH	Gnd	Analog ground
118	LDO_O	O	On-chip 1.2V LDO Controller Output This pin drives the input gate of a P-channel MOSFET to generate 1.2V for the chip’s core voltages. If 1.2V is provided by the system and this pin is not used, it can be left floating.
119	AGNDL_PLL	Gnd	Analog ground
120	AVDDL_PLL	P	1.2V analog V_{DD} for PLL
121	AVDDL_PLL	P	1.2V analog V_{DD} for VCO
122	AVDDH	P	3.3V analog V_{DD}
123	XO	O	25MHz Crystal feedback This pin is a no connect if oscillator or external clock source is used.
124	XI	I	Crystal / Oscillator / External Clock Input 25MHz +/-50ppm tolerance
125	AVDDH	P	3.3V analog V_{DD}

Pin Number	Pin Name	Type (Note 1)	Pin Function
126	ISET	I/O	Set transmit output level Connect a 4.99KΩ 1% resistor to ground on this pin
127	AGNDH_BG	Gnd	Analog ground
128	AVDDH	P	3.3V analog V_{DD}

Note 1:

P = Power supply.

Gnd = Ground.

I = Input.

O = Output.

I/O = Bi-directional.

Ipu = Input with internal pull-up.

Ipu/O = Input with internal pull-up / Output.

© 2009-2019 Microchip Technology Inc.

2.3 Strapping Options

<table>
<tr><th>Pin Number</th><th>Pin Name</th><th>Type (Note 1)</th><th>Pin Function</th></tr>
<tr><td>42
43
44
45
48</td><td>PHYAD4
PHYAD3
PHYAD2
PHYAD1
PHYAD0</td><td>I/O
I/O
I/O
I/O
I/O</td><td>The PHY Address, PHYAD[4:0], is latched at power-up / reset and is configurable to any value from 1 to 31. Each PHY address bit is configured as follows:
Pull-up = 1
Pull-down = 0</td></tr>
<tr><td>78
83
88
89</td><td>MODE3
MODE2
MODE1
MODE0</td><td>I/O
I/O
I/O
I/O</td><td>The MODE[3:0] strap-in pins are latched at power-up / reset and are defined as follows:
<table>
<tr><th>MODE[3:0]</th><th>Mode</th></tr>
<tr><td>0000</td><td>Reserved - not used</td></tr>
<tr><td>0001</td><td>GMII / MII Mode</td></tr>
<tr><td>0010</td><td>Reserved - not used</td></tr>
<tr><td>0011</td><td>Reserved - not used</td></tr>
<tr><td>0100</td><td>NAND Tree Mode</td></tr>
<tr><td>0101</td><td>Reserved - not used</td></tr>
<tr><td>0110</td><td>Reserved - not used</td></tr>
<tr><td>0111</td><td>Chip Power Down Mode</td></tr>
<tr><td>1000</td><td>Reserved - not used</td></tr>
<tr><td>1001</td><td>Reserved - not used</td></tr>
<tr><td>1010</td><td>Reserved - not used</td></tr>
<tr><td>1011</td><td>Reserved - not used</td></tr>
<tr><td>1100</td><td>Reserved - not used</td></tr>
<tr><td>1101</td><td>Reserved - not used</td></tr>
<tr><td>1110</td><td>Reserved - not used</td></tr>
<tr><td>1111</td><td>Reserved - not used</td></tr>
</table></td></tr>
<tr><td>90</td><td>CLK125_EN</td><td>I/O</td><td>CLK125_EN is latched at power-up / reset and is defined as follows:
Pull-up = Enable 125MHz Clock Output
Pull-down = Disable 125MHz Clock Output
Pin 107 (CLK125_NDO) provides the 125MHz reference clock output option for use by the MAC.</td></tr>
</table>

Note 1:

I/O = Bi-directional.

Pin strap-ins are latched during power-up or reset. In some systems, the MAC receive input pins may be driven during power-up or reset, and consequently cause the PHY strap-in pins on the GMII/MII signals to be latched to the incorrect configuration. In this case, it is recommended to add external pull-ups/pull-downs on the PHY strap-in pins to ensure the PHY is configured to the correct pin strap-in mode.

3.0 FUNCTIONAL OVERVIEW

The KSZ9021GQ is a completely integrated triple speed (10Base-T/100Base-TX/1000Base-T) Ethernet Physical Layer Transceiver solution for transmission and reception of data over a standard CAT-5 unshielded twisted pair (UTP) cable. Its on-chip proprietary 1000Base-T transceiver and Manchester/MLT-3 signaling-based 10Base-T/100Base-TX transceivers are all IEEE 802.3 compliant.

The KSZ9021GQ reduces board cost and simplifies board layout by using on-chip termination resistors for the four differential pairs and by integrating a LDO controller to drive a low cost MOSFET to supply the 1.2V core.

On the copper media interface, the KSZ9021GQ can automatically detect and correct for differential pair misplacements and polarity reversals, and correct propagation delays and re-sync timing between the four differential pairs, as specified in the IEEE 802.3 standard for 1000Base-T operation.

The KSZ9021GQ provides the GMII/MII interface for a direct and seamless connection to GMACs in Gigabit Ethernet Processors and Switches for data transfer at 10/100/1000 Mbps speed.

The following figure shows a high-level block diagram of the KSZ9021GQ.

FIGURE 3-1: KSZ9021GQ BLOCK DIAGRAM

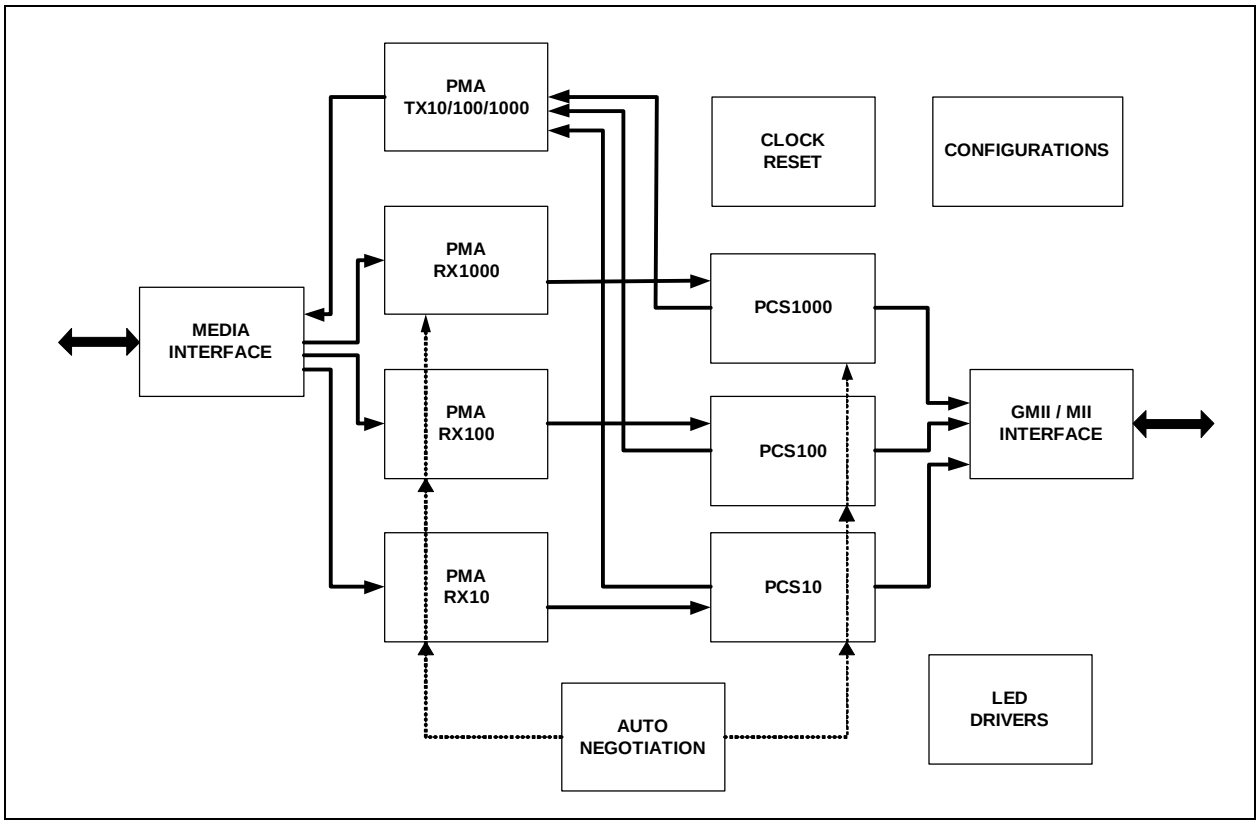

© 2009-2019 Microchip Technology Inc.

3.1 Functional Description: 10Base-T/100Base-TX Transceiver

3.1.1 100BASE-TX TRANSMIT

The 100Base-TX transmit function performs parallel to serial conversion, 4B/5B coding, scrambling, NRZ-to-NRZI conversion, and MLT-3 encoding and transmission.

The circuitry starts with a parallel-to-serial conversion, which converts the MII data from the MAC into a 125MHz serial bit stream. The data and control stream is then converted into 4B/5B coding, followed by a scrambler. The serialized data is further converted from NRZ-to-NRZI format, and then transmitted in MLT-3 current output. The output current is set by an external 4.99KΩ 1% resistor for the 1:1 transformer ratio.

The output signal has a typical rise/fall time of 4ns and complies with the ANSI TP-PMD standard regarding amplitude balance, overshoot, and timing jitter. The wave-shaped 10Base-T output is also incorporated into the 100Base-TX transmitter.

3.1.2 100BASE-TX RECEIVE

The 100BASE-TX receiver function performs adaptive equalization, DC restoration, MLT-3-to-NRZI conversion, data and clock recovery, NRZI-to-NRZ conversion, de-scrambling, 4B/5B decoding, and serial-to-parallel conversion.

The receiving side starts with the equalization filter to compensate for inter-symbol interference (ISI) over the twisted pair cable. Since the amplitude loss and phase distortion is a function of the cable length, the equalizer must adjust its characteristics to optimize performance. In this design, the variable equalizer makes an initial estimation based on comparisons of incoming signal strength against some known cable characteristics, and then tunes itself for optimization. This is an ongoing process and self-adjusts against environmental changes such as temperature variations.

Next, the equalized signal goes through a DC restoration and data conversion block. The DC restoration circuit is used to compensate for the effect of baseline wander and to improve the dynamic range. The differential data conversion circuit converts the MLT-3 format back to NRZI. The slicing threshold is also adaptive.

The clock recovery circuit extracts the 125MHz clock from the edges of the NRZI signal. This recovered clock is then used to convert the NRZI signal into the NRZ format. This signal is sent through the de-scrambler followed by the 4B/5B decoder. Finally, the NRZ serial data is converted to the GMII/MII format and provided as the input data to the MAC.

3.1.3 SCRAMBLER/DE-SCRAMBLER (100BASE-TX ONLY)

The purpose of the scrambler is to spread the power spectrum of the signal to reduce electromagnetic interference (EMI) and baseline wander. Transmitted data is scrambled through the use of an 11-bit wide linear feedback shift register (LFSR). The scrambler generates a 2047-bit non-repetitive sequence, and the receiver then de-scrambles the incoming data stream using the same sequence as at the transmitter.

3.1.4 10BASE-T TRANSMIT

The output 10Base-T driver is incorporated into the 100Base-TX driver to allow transmission with the same magnetic. They are internally wave-shaped and pre-emphasized into typical outputs of 2.5V amplitude. The harmonic contents are at least 31 dB below the fundamental when driven by an all-ones Manchester-encoded signal.

3.1.5 10BASE-T RECEIVE

On the receive side, input buffer and level detecting squelch circuits are employed. A differential input receiver circuit and a phase-locked loop (PLL) perform the decoding function. The Manchester-encoded data stream is separated into clock signal and NRZ data. A squelch circuit rejects signals with levels less than 300 mV or with short pulse widths in order to prevent noises at the receive inputs from falsely triggering the decoder. When the input exceeds the squelch limit, the PLL locks onto the incoming signal and the KSZ9021GQ decodes a data frame. The receiver clock is maintained active during idle periods in between receiving data frames.

© 2009-2019 Microchip Technology Inc.

3.2 Functional Description: 1000Base-T Transceiver

The 1000Base-T transceiver is based-on a mixed-signal / digital signal processing (DSP) architecture, which includes the analog front-end, digital channel equalizers, trellis encoders/decoders, echo cancellers, cross-talk cancellers, precision clock recovery scheme, and power efficient line drivers.

The following figure shows a high-level block diagram of a single channel of the 1000Base-T transceiver for one of the four differential pairs.

FIGURE 3-2: KSZ9021GQ 1000BASE-T BLOCK DIAGRAM - SINGLE CHANNEL

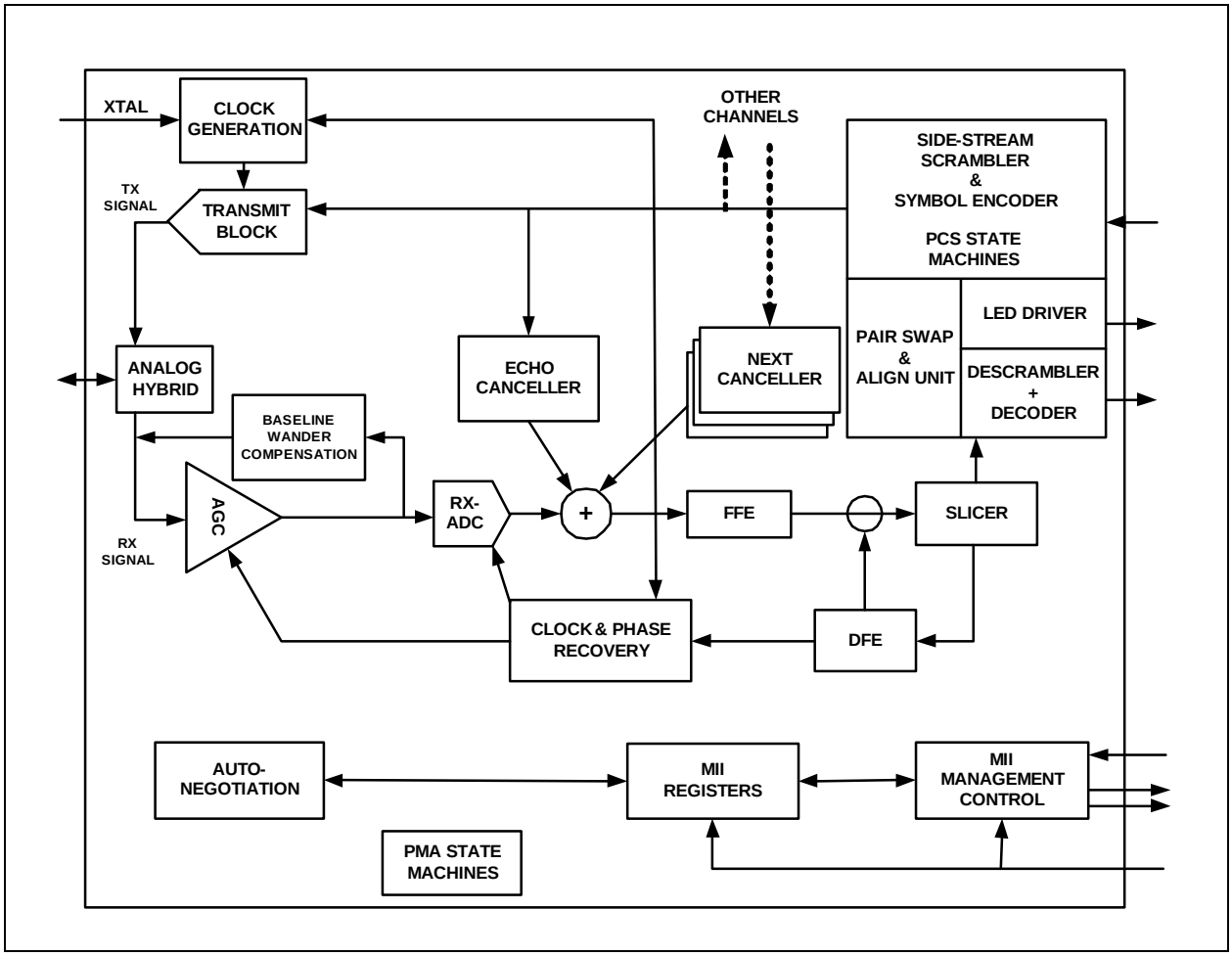

3.2.1 ANALOG ECHO CANCELLATION CIRCUIT

In 1000Base-T mode, the analog echo cancellation circuit helps to reduce the near-end echo. This analog hybrid circuit relieves the burden of the ADC and the adaptive equalizer.

This circuit is disabled in 10Base-T/100Base-TX mode.

3.2.2 AUTOMATIC GAIN CONTROL (AGC)

In 1000Base-T mode, the automatic gain control (AGC) circuit provides initial gain adjustment to boost up the signal level. This pre-conditioning circuit is used to improve the signal-to-noise ratio of the receive signal.

3.2.3 ANALOG-TO-DIGITAL CONVERTER (ADC)

In 1000Base-T mode, the analog-to-digital converter (ADC) digitizes the incoming signal. ADC performance is essential to the overall performance of the transceiver.

This circuit is disabled in 10Base-T/100Base-TX mode.

© 2009-2019 Microchip Technology Inc.

3.2.4 TIMING RECOVERY CIRCUIT

In 1000Base-T mode, the mixed-signal clock recovery circuit together with the digital phase locked loop is used to recover and track the incoming timing information from the received data. The digital phase locked loop has very low long-term jitter to maximize the signal-to-noise ratio of the receive signal.

The 1000Base-T slave PHY is required to transmit the exact receive clock frequency recovered from the received data back to the 1000Base-T master PHY. Otherwise, the master and slave will not be synchronized after long transmission. Additionally, this helps to facilitate echo cancellation and NEXT removal.

3.2.5 ADAPTIVE EQUALIZER

In 1000Base-T mode, the adaptive equalizer provides the following functions:

- Detection for partial response signaling
- Removal of NEXT and ECHO noise
- Channel equalization

Signal quality is degraded by residual echo that is not removed by the analog hybrid and echo due to impedance mismatch. The KSZ9021GQ employs a digital echo canceller to further reduce echo components on the receive signal.

In 1000Base-T mode, data transmission and reception occurs simultaneously on all four pairs of wires (four channels). This results in high frequency cross-talk coming from adjacent wires. The KSZ9021GQ employs three NEXT cancellers on each receive channel to minimize the cross-talk induced by the other three channels.

In 10Base-T/100Base-TX mode, the adaptive equalizer needs only to remove the inter-symbol interference and recover the channel loss from the incoming data.

3.2.6 TRELLIS ENCODER AND DECODER

In 1000Base-T mode, the transmitted 8-bit data is scrambled into 9-bit symbols and further encoded into 4D-PAM5 symbols. The initial scrambler seed is determined by the specific PHY address to reduce EMI when more than one KSZ9021GQ are used on the same board. On the receiving side, the idle stream is examined first. The scrambler seed, pair skew, pair order and polarity have to be resolved through the logic. The incoming 4D-PAM5 data is then converted into 9-bit symbols and then de-scrambled into 8-bit data.

3.3 Functional Description: Additional 10/100/1000 PHY Features

3.3.1 AUTO MDI/MDI-X

The Automatic MDI/MDI-X feature eliminates the need to determine whether to use a straight cable or a crossover cable between the KSZ9021GQ and its link partner. This auto-sense function detects the MDI/MDI-X pair mapping from the link partner, and then assigns the MDI/MDI-X pair mapping of the KSZ9021GQ accordingly.

The following table shows the KSZ9021GQ 10/100/1000 pin-out assignments for MDI/MDI-X pin mapping.

TABLE 3-1: MDI / MDI-X PIN MAPPING

Pin (RJ-45 pair)	MDI			MDI-X		
	1000Base-T	100Base-TX	10Base-T	1000Base-T	100Base-TX	10Base-T
TXRXP/M_A (1,2)	A+/-	TX+/-	TX+/-	B+/-	RX+/-	RX+/-
TXRXP/M_B (3,6)	B+/-	RX+/-	RX+/-	A+/-	TX+/-	TX+/-
TXRXP/M_C (4,5)	C+/-	Not used	Not used	D+/-	Not used	Not used
TXRXP/M_D (7,8)	D+/-	Not used	Not used	C+/-	Not used	Not used

Auto MDI/MDI-X is enabled by default. It is disabled by writing a one to register 28 (1Ch) bit 6. MDI and MDI-X mode is set by register 28 (1Ch) bit 7 if auto MDI/MDI-X is disabled.

An isolation transformer with symmetrical transmit and receive data paths is recommended to support auto MDI/MDI-X.

3.3.2 PAIR- SWAP, ALIGNMENT, AND POLARITY CHECK

In 1000Base-T mode, the KSZ9021GQ

- detects incorrect channel order and automatically restore the pair order for the A, B, C, D pairs (four channels)
- supports 50±/-10ns difference in propagation delay between pairs of channels in accordance with the IEEE 802.3 standard, and automatically corrects the data skew so the corrected four pairs of data symbols are synchronized

Incorrect pair polarities of the differential signals are automatically corrected for all speeds.

3.3.3 WAVE SHAPING, SLEW RATE CONTROL AND PARTIAL RESPONSE

In communication systems, signal transmission encoding methods are used to provide the noise-shaping feature and to minimize distortion and error in the transmission channel.

- For 1000Base-T, a special partial response signaling method is used to provide the band-limiting feature for the transmission path.
- For 100Base-TX, a simple slew rate control method is used to minimize EMI.
- For 10Base-T, pre-emphasis is used to extend the signal quality through the cable.

3.3.4 PLL CLOCK SYNTHESIZER

The KSZ9021GQ generates 125MHz, 25MHz and 10MHz clocks for system timing. Internal clocks are generated from the external 25 MHz crystal or reference clock.

3.4 Auto-Negotiation

The KSZ9021GQ conforms to the auto-negotiation protocol, defined in Clause 28 of the IEEE 802.3 Specification.

Auto-negotiation allows UTP (Unshielded Twisted Pair) link partners to select the highest common mode of operation.

During auto-negotiation, link partners advertise capabilities across the UTP link to each other, and then compare their own capabilities with those they received from their link partners. The highest speed and duplex setting that is common to the two link partners is selected as the mode of operation.

The following list shows the speed and duplex operation mode from highest to lowest.

- Priority 1: 1000Base-T, full-duplex
- Priority 2: 1000Base-T, half-duplex
- Priority 3: 100Base-TX, full-duplex
- Priority 4: 100Base-TX, half-duplex
- Priority 5: 10Base-T, full-duplex
- Priority 6: 10Base-T, half-duplex

If auto-negotiation is not supported or the KSZ9021GQ link partner is forced to bypass auto-negotiation for 10Base-T and 100Base-TX modes, then the KSZ9021GQ sets its operating mode by observing the input signal at its receiver. This is known as parallel detection, and allows the KSZ9021GQ to establish link by listening for a fixed signal protocol in the absence of auto-negotiation advertisement protocol.

The auto-negotiation link up process is shown in the following flow chart.

© 2009-2019 Microchip Technology Inc.

FIGURE 3-3: AUTO-NEGOTIATION FLOW CHART

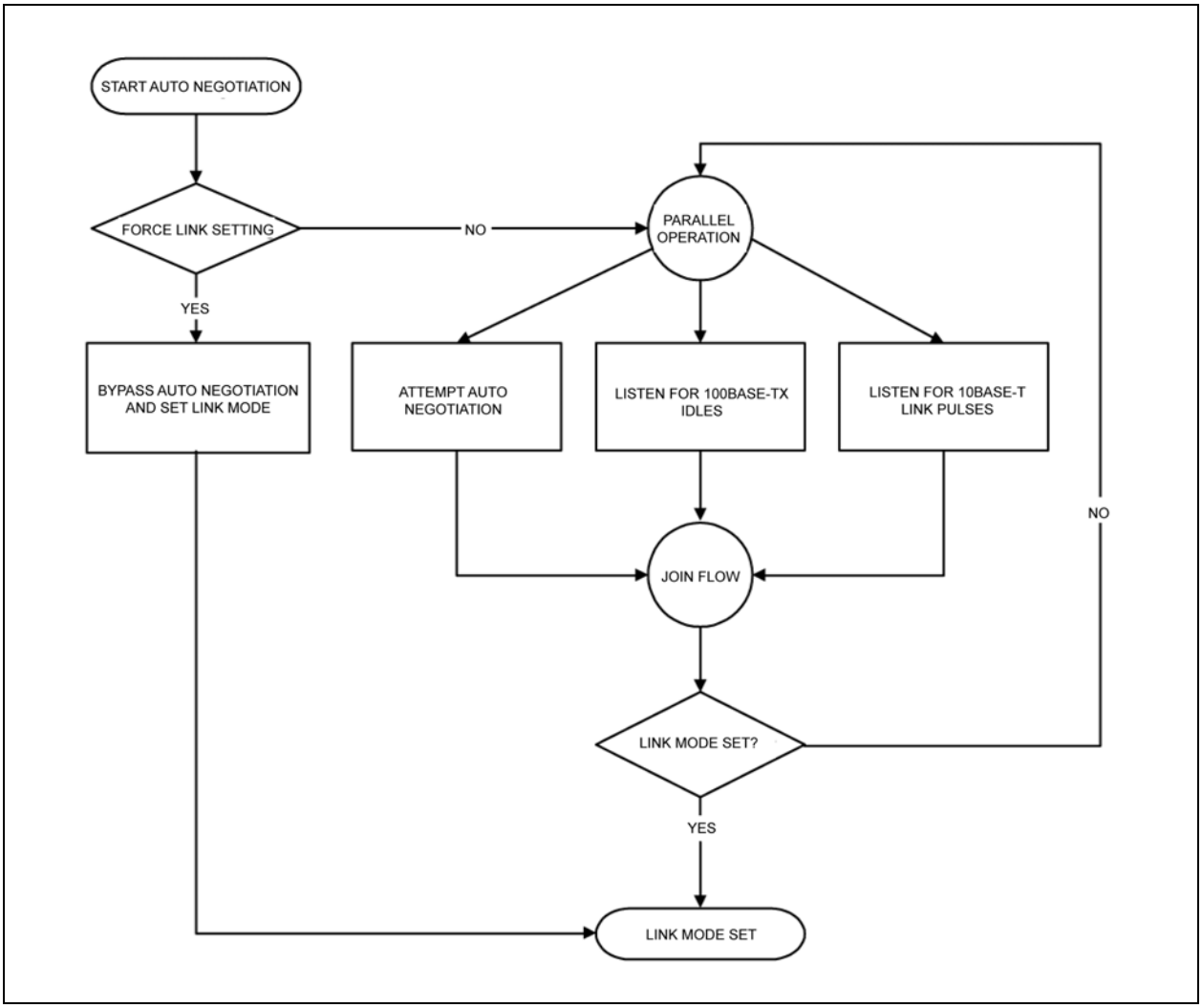

For 1000Base-T mode, auto-negotiation is required and always used to establish a link. During 1000Base-T auto-negotiation, the Master and Slave configuration is first resolved between link partners, and then the link is established with the highest common capabilities between link partners.

Auto-negotiation is enabled by default at power-up or after hardware reset. Afterwards, auto-negotiation can be enabled or disabled through register 0 bit 12. If auto-negotiation is disabled, the speed is set by register 0 bits 6 and 13, and the duplex is set by register 0 bit 8.

If the speed is changed on the fly, the link goes down and either auto-negotiation or parallel detection will initiate until a common speed between KSZ9021GQ and its link partner is re-established for a link.

If link is already established and there is no change of speed on the fly, then the changes will not take effect unless either auto-negotiation is restarted through register 0 bit 9, or a link down to link up transition occurs (i.e., disconnecting and reconnecting the cable).

After auto-negotiation is completed, the link status is updated in register 1 and the link partner capabilities are updated in registers 5, 6, and 10.

The auto-negotiation finite state machines employ interval timers to manage the auto-negotiation process. The duration of these timers under normal operating conditions are summarized in the following table.

TABLE 3-2: AUTO-NEGOTIATION TIMERS

Auto-Negotiation Interval Timers	Time Duration
Transmit Burst interval	16 ms
Transmit Pulse interval	68 us
FLP detect minimum time	17.2 us
FLP detect maximum time	185 us
Receive minimum Burst interval	6.8 ms
Receive maximum Burst interval	112 ms
Data detect minimum interval	35.4 us
Data detect maximum interval	95 us
NLP test minimum interval	4.5 ms
NLP test maximum interval	30 ms
Link Loss time	52 ms
Break Link time	1480 ms
Parallel Detection wait time	830 ms
Link Enable wait time	1000 ms

3.5 GMII Interface

The Gigabit Media Independent Interface (GMII) is compliant to the IEEE 802.3 Specification. It provides a common interface between GMII PHYs and MACs, and has the following key characteristics:

- Pin count is 24 pins (11 pins for data transmission, 11 pins for data reception, and 2 pins for carrier and collision indication).
- 1000Mbps is supported at both half and full duplex.
- Data transmission and reception are independent and belong to separate signal groups.
- Transmit data and receive data are each 8-bit wide, a byte.

In GMII operation, the GMII pins function as follow:

- The MAC sources the transmit reference clock, GTX_CLK, at 125MHz for 1000Mbps.
- The PHY recovers and sources the receive reference clock, RX_CLK, at 125MHz for 1000Mbps.
- TX_EN, TXD[7:0] and TX_ER are sampled by the KSZ9021GQ on the rising edge of GTX_CLK.
- RX_DV, RXD[7:0], and RX_ER are sampled by the MAC on the rising edge of RX_CLK.
- CRS and COL are driven by the KSZ9021GQ and are not required to transition synchronously with respect to either GTX_CLK or RX_CLK.

The KSZ9021GQ combines GMII mode with MII mode to form GMII/MII mode to support data transfer at 10/100/1000 Mbps speed. After power-up or reset, the KSZ9021GQ is configured to GMII/MII mode if the MODE[3:0] strap-in pins are set to 0001. See Strapping Options section.

The KSZ9021GQ has the option to output a low jitter 125MHz reference clock on CLK125_NDO (pin 107). This clock provides a lower cost reference clock alternative for GMII/MII MACs that require a 125MHz crystal or oscillator. The 125MHz clock output is enabled after power-up or reset if the CLK125_EN strap-in pin is pulled high.

The KSZ9021GQ provides a dedicated transmit clock input pin for GMII mode, defined as follows:

GTX_CLK (input, pin 65): Sourced by MAC in GMII mode for 1000Mbps speed.

© 2009-2019 Microchip Technology Inc.

3.5.1 GMII SIGNAL DEFINITION

The following table describes the GMII signals. Refer to Clause 35 of the IEEE 802.3 Specification for more detailed information.

TABLE 3-3: GMII SIGNAL DEFINITION

GMII Signal Name (per spec)	GMII Signal Name (per KSZ9021GQ)	Pin Type (with respect to PHY)	Pin Type (with respect to MAC)	Description
GTX_CLK	GTX_CLK	Input	Output	Transmit Reference Clock (125MHz for 1000Mbps)
TX_EN	TX_EN	Input	Output	Transmit Enable
TXD[7:0]	TXD[7:0]	Input	Output	Transmit Data [7:0]
TX_ER	TX_ER	Input	Output	Transmit Error
RX_CLK	RX_CLK	Output	Input	Receive Reference Clock (125MHz for 1000Mbps)
RX_DV	RX_DV	Output	Input	Receive Data Valid
RXD[7:0]	RXD[7:0]	Output	Input	Receive Data [7:0]
RX_ER	RX_ER	Output	Input	Receive Error
CRS	CRS	Output	Input	Carrier Sense
COL	COL	Output	Input	Collision Detected

3.5.2 GMII SIGNAL DIAGRAM

The KSZ9021GQ GMII pin connections to the MAC are shown in the following figure.

FIGURE 3-4: KSZ9021GQ GMII INTERFACE

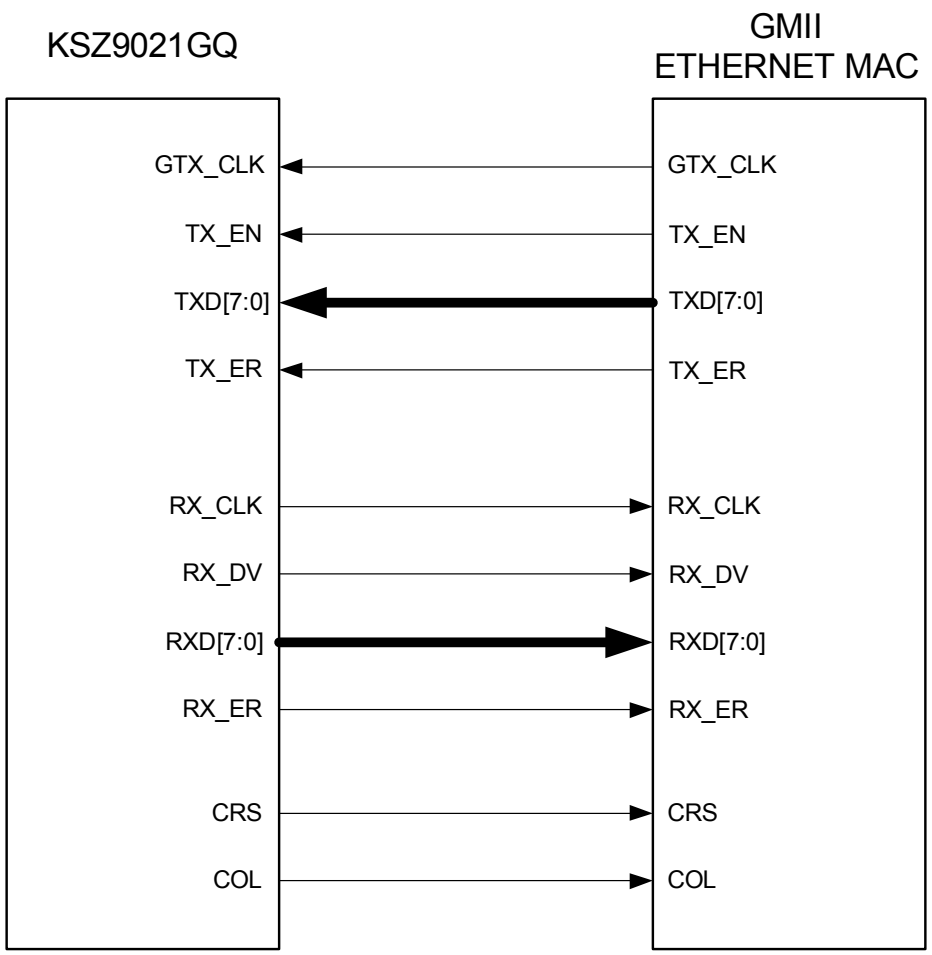

3.6 MII Interface

The Media Independent Interface (MII) is compliant with the IEEE 802.3 Specification. It provides a common interface between MII PHYs and MACs, and has the following key characteristics:

- Pin count is 16 pins (7 pins for data transmission, 7 pins for data reception, and 2 pins for carrier and collision indication).
- 10Mbps and 100Mbps are supported at both half and full duplex.
- Data transmission and reception are independent and belong to separate signal groups.
- Transmit data and receive data are each 4-bit wide, a nibble.

In MII operation, the MII pins function as follow:

- The PHY sources the transmit reference clock, TX_CLK, at 25MHz for 100Mbps and 2.5MHz for 10Mbps.
- The PHY recovers and sources the receive reference clock, RX_CLK, at 25MHz for 100Mbps and 2.5MHz for 10Mbps.

© 2009-2019 Microchip Technology Inc.

- TX_EN, TXD[3:0] and TX_ER are driven by the MAC and shall transition synchronously with respect to TX_CLK.
- RX_DV, RXD[3:0], and RX_ER are driven by the KSZ9021GQ and shall transition synchronously with respect to RX_CLK.
- CRS and COL are driven by the KSZ9021GQ and are not required to transition synchronously with respect to either TX_CLK or RX_CLK.

The KSZ9021GQ combines GMII mode with MII mode to form GMII/MII mode to support data transfer at 10/100/1000 Mbps speeds. After the power-up or reset, the KSZ9021GQ is then configured to GMII/MII mode if the MODE[3:0] strap-in pins are set to 0001. See Strapping Options section.

The KSZ9021GQ has the option to output a low jitter 125MHz reference clock on CLK125_NDO (pin 107). This clock provides a lower cost reference clock alternative for GMII/MII MACs that require a 125MHz crystal or oscillator. The 125MHz clock output is enabled after power-up or reset if the CLK125_EN strap-in pin is pulled high.

The KSZ9021GQ provides a dedicated transmit clock output pin for MII mode, defined as follow:

- TX_CLK (output, pin 115) : Sourced by KSZ9021GQ in MII mode for 10/100Mbps speed

3.6.1 MII SIGNAL DEFINITION

The following table describes the MII signals. Refer to Clause 22 of the IEEE 802.3 Specification for detailed information.

TABLE 3-4: MII SIGNAL DEFINITION

MII Signal Name (per spec)	MII Signal Name (per KSZ9021GQ)	Pin Type (with respect to PHY)	Pin Type (with respect to MAC)	Description
TX_CLK	TX_CLK	Output	Input	Transmit Reference Clock (25MHz for 100Mbps, 2.5MHz for 10Mbps)
TX_EN	TX_EN	Input	Output	Transmit Enable
TXD[3:0]	TXD[3:0]	Input	Output	Transmit Data [3:0]
TX_ER	TX_ER	Input	Output	Transmit Error
RX_CLK	RX_CLK	Output	Input	Receive Reference Clock (25MHz for 100Mbps, 2.5MHz for 10Mbps)
RX_DV	RX_DV	Output	Input	Receive Data Valid
RXD[3:0]	RXD[3:0]	Output	Input	Receive Data [3:0]
RX_ER	RX_ER	Output	Input	Receive Error
CRS	CRS	Output	Input	Carrier Sense
COL	COL	Output	Input	Collision Detected

3.6.2 MII SIGNAL DIAGRAM

The KSZ9021GQ MII pin connections to the MAC are shown in the following figure.

FIGURE 3-5: KSZ9021GQ MII INTERFACE

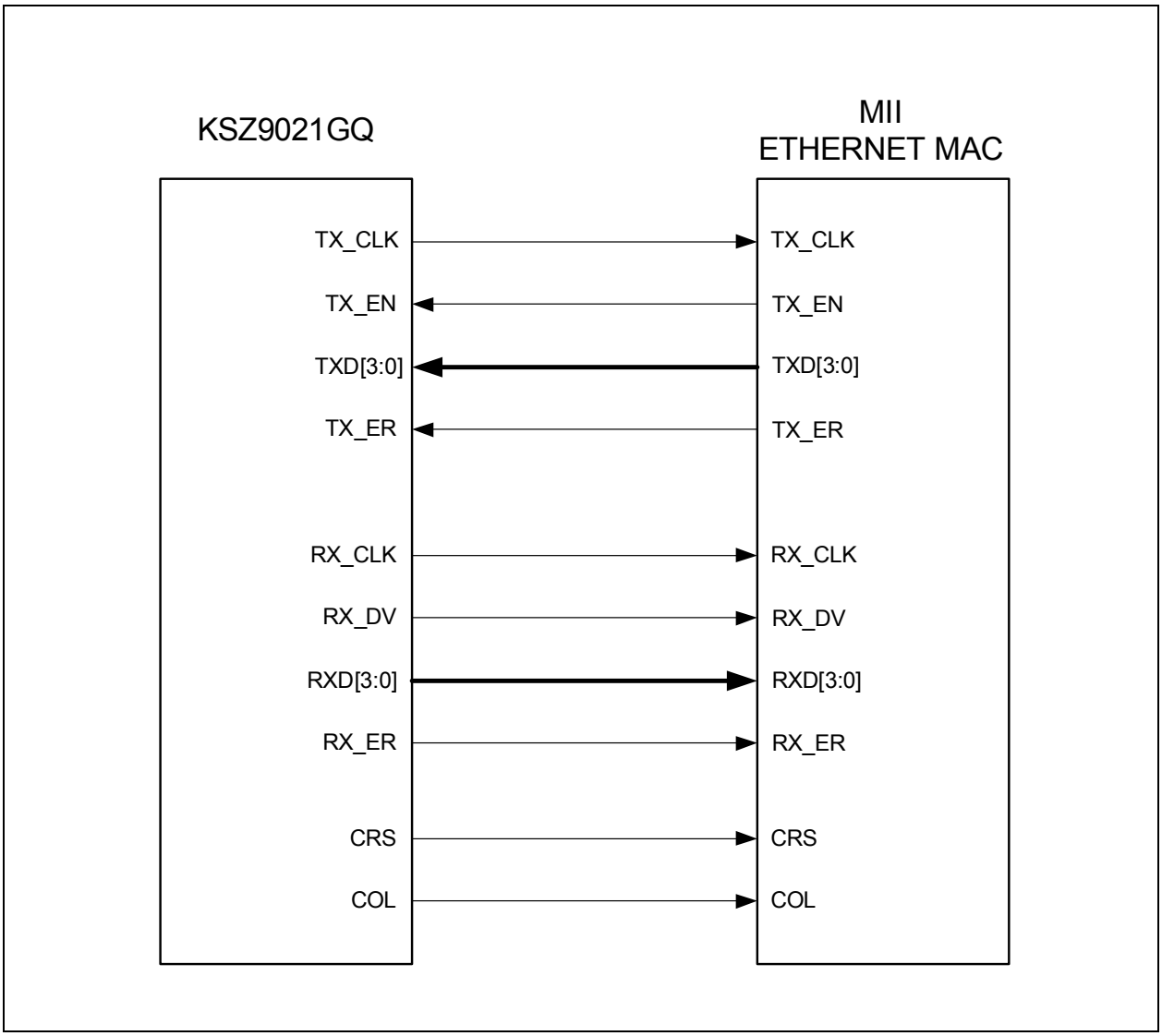

3.7 MII Management (MIIM) Interface

The KSZ9021GQ supports the IEEE 802.3 MII Management Interface, also known as the Management Data Input/Output (MDIO) Interface. This interface allows upper-layer devices to monitor and control the state of the KSZ9021GQ. An external device with MIIM capability is used to read the PHY status and/or configure the PHY settings. Further detail on the MIIM interface can be found in Clause 22.2.4.5 of the IEEE 802.3 Specification.

The MIIM interface consists of the following:

- A physical connection that incorporates the clock line (MDC) and the data line (MDIO).
- A specific protocol that operates across the aforementioned physical connection that allows an external controller to communicate with one or more KSZ9021GQ device. Each KSZ9021GQ device is assigned a PHY address between 1 and 31 by the PHYAD[4:0] strapping pins.

© 2009-2019 Microchip Technology Inc.

- A 32 register address space to access the KSZ9021GQ IEEE Defined Registers, Vendor Specific Registers and Extended Registers. See Register Map section.

The following table shows the MII Management frame format for the KSZ9021GQ.

TABLE 3-5: MII MANAGEMENT FRAME FORMAT – FOR KSZ9021GQ

Preamble		Start of Frame	Read/Write OP Code	PHY Address Bits [4:0]	REG Address Bits [4:0]	TA	Data Bits [15:0]	Idle
Read	32 1's	01	10	AAAAA	RRRRR	Z0	DDDDDDDD_DDDDDDDD	Z
Write	32 1's	01	01	AAAAA	RRRRR	10	DDDDDDDD_DDDDDDDD	Z

3.8 Interrupt (INT_N)

INT_N (pin 101) is an optional interrupt signal that is used to inform the external controller that there has been a status update in the KSZ9021GQ PHY register. Bits [15:8] of register 27 (1Bh) are the interrupt control bits to enable and disable the conditions for asserting the INT_N signal. Bits [7:0] of register 27 (1Bh) are the interrupt status bits to indicate which interrupt conditions have occurred. The interrupt status bits are cleared after reading register 27 (1Bh).

Bit 14 of register 31 (1Fh) sets the interrupt level to active high or active low. The default is active low.

The MII management bus option gives the MAC processor complete access to the KSZ9021GQ control and status registers. Additionally, an interrupt pin eliminates the need for the processor to poll the PHY for status change.

3.9 LED Mode

The KSZ9021GQ provides six programmable LED output pins (LED1 thru LED6) that are configurable to support three LED modes. Bits [7:6] of register 17 (11h) are the LED Mode Select [1:0] bits, and are defined as follows:

- 00 = Reserved – not used
- 10 = 4-LED Configuration
- 01 = 5-LED Configuration
- 11 = 6-LED Configuration (default setting after power-up / reset)

3.9.1 4-LED CONFIGURATION

In this LED mode, the link and activity are combined into one LED for each speed. The unused pins LED2 and LED1 are internally pulled high.

TABLE 3-6: 4-LED CONFIGURATION – PIN DEFINITION

LED pin	Pin State	LED Definition	Description
LED6	H	OFF	10Base-T, Link off
	L	ON	10Base-T, Link on
	Toggle	Blinking	10Base-T, Activity
LED5	H	OFF	100Base-TX, Link off
	L	ON	100Base-TX, Link on
	Toggle	Blinking	100Base-TX, Activity
LED4	H	OFF	1000Base-T, Link off
	L	ON	1000Base-T, Link on
	Toggle	Blinking	1000Base-T, Activity
LED3	H	OFF	Half-duplex
	L	ON	Full-duplex
	Toggle	Blinking	Collision

3.9.2 5-LED CONFIGURATION

In this LED mode, the transmit and receive activities are combined into pin LED1. The unused pin LED2 is internally pulled high.

TABLE 3-7: 5-LED CONFIGURATION – PIN DEFINITION

LED pin	Pin State	LED Definition	Description
LED6	H	OFF	10Base-T, Link off
	L	ON	10Base-T, Link on
LED5	H	OFF	100Base-TX, Link off
	L	ON	100Base-TX, Link on
LED4	H	OFF	1000Base-T, Link off
	L	ON	1000Base-T, Link on
LED3	H	OFF	Half-duplex
	L	ON	Full-duplex
	Toggle	Blinking	Collision
LED1	H	OFF	No Activity
	L	ON	Transmit or Receive Activity
	Toggle	Blinking	

3.9.3 6-LED CONFIGURATION

In this LED mode, all six LED pins are used. Pins LED2 and LED1 are dedicated for receive activity and transmit activity, respectively, for all speeds.

TABLE 3-8: 6-LED CONFIGURATION – PIN DEFINITION

LED pin	Pin State	LED Definition	Description
LED6	H	OFF	10Base-T, Link off
	L	ON	10Base-T, Link on
LED5	H	OFF	100Base-TX, Link off
	L	ON	100Base-TX, Link on
LED4	H	OFF	1000Base-T, Link off
	L	ON	1000Base-T, Link on
LED3	H	OFF	Half-duplex
	L	ON	Full-duplex
	Toggle	Blinking	Collision
LED2	H	OFF	No Receive Activity
	L	ON	Receive Activity
	Toggle	Blinking	
LED1	H	OFF	No Transmit Activity
	L	ON	Transmit Activity
	Toggle	Blinking	

Each LED output pin can directly drive a LED with a series resistor (typically 220Ω to 470Ω).

For activity indication, the LED output toggles at approximately 12.5Hz (80ms) to ensure visibility to the human eye.

© 2009-2019 Microchip Technology Inc.

3.10 NAND Tree Support

The KSZ9021GQ provides parametric NAND tree support for fault detection between chip I/Os and board. The NAND tree mode is enabled at power-up / reset with the MODE[3:0] strap-in pins set to 0100.

The following table lists the NAND tree pin order.

TABLE 3-9: NAND TREE TEST PIN ORDER – FOR KSZ9021GQ

Pin	Description
LED6	Input
LED5	Input
LED4	Input
LED3	Input
LED2	Input
LED1	Input
TXD0	Input
TXD1	Input
TXD2	Input
TXD3	Input
TXD4	Input
TXD5	Input
TXD6	Input
TXD7	Input
TX_ER	Input
GTX_CLK	Input
TX_EN	Input
RXD7	Input
RXD6	Input
RXD5	Input
RXD4	Input
RX_DV	Input
RX_ER	Input
RX_CLK	Input
CRS	Input
COL	Input
INT_N	Input
MDC	Input
A1	Input
MDIO	Input
CLK125_NDO	Output

3.11 Power Management

The KSZ9021GQ offers the following power management modes:

3.11.1 POWER SAVING MODE

This mode is a KSZ9021GQ green feature to reduce power consumption when the cable is unplugged. It is in effect when auto-negotiation mode is enabled and the cable is disconnected (no link).

3.11.2 SOFTWARE POWER-DOWN MODE

This mode is used to power down the KSZ9021GQ device when it is not in use after power-up. Power-down mode is enabled by writing a one to register 0h bit 11. In the power-down state, the KSZ9021GQ disables all internal functions, except for the MII management interface. The KSZ9021GQ exits power-down mode after writing a zero to register 0h bit 11.

3.11.3 CHIP POWER-DOWN MODE

This mode provides the lowest power state for the KSZ9021GQ when it is not in use and is mounted on the board. Chip power-down mode is enabled at power-up / reset with the MODE[3:0] strap-in pins set to 0111. The KSZ9021GQ exits chip power down mode when a hardware reset is applied to RESET_N (pin 110) with the MODE[3:0] strap-in pins set to an operating mode other than chip power-down mode.

© 2009-2019 Microchip Technology Inc.

4.0 REGISTER MAP

The IEEE 802.3 Specification provides a 32 register address space for the PHY. Registers 0 thru 15 are standard PHY registers, defined per the specification. Registers 16 thru 31 are vendor specific registers.

The KSZ9021GQ uses the IEEE provided register space for IEEE Defined Registers and Vendor Specific Registers, and uses the following registers to access Extended Registers:

- Register 11 (Bh) for Extended Register – Control
- Register 12 (Ch) for Extended Register – Data Write
- Register 13 (Dh) for Extended Register – Data Read

Examples:

- Extended Register Read // Read from Operation Mode Strap Status Register

1. Write register 11 (Bh) with 0103h // Set register 259 (103h) for read
2. Read register 13 (Dh) // Read register value

- Extended Register Write // Write to Operation Mode Strap Override Register

1. Write register 11 (Bh) with 8102h // Set register 258 (102h) for write
2. Write register 12 (Ch) with 0010h // Write 0010h value to register to set NAND Tree mode

Register Number (Hex)	Description
IEEE Defined Registers	
0 (0h)	Basic Control
1 (1h)	Basic Status
2 (2h)	PHY Identifier 1
3 (3h)	PHY Identifier 2
4 (4h)	Auto-Negotiation Advertisement
5 (5h)	Auto-Negotiation Link Partner Ability
6 (6h)	Auto-Negotiation Expansion
7 (7h)	Auto-Negotiation Next Page
8 (8h)	Auto-Negotiation Link Partner Next Page Ability
9 (9h)	1000Base-T Control
10 (Ah)	1000Base-T Status
11 (Bh)	Extended Register – Control
12 (Ch)	Extended Register – Data Write
13 (Dh)	Extended Register – Data Read
14 (Eh)	Reserved
15 (Fh)	Extended – MII Status
Vendor Specific Registers	
16 (10h)	Reserved
17 (11h)	Remote Loopback, LED Mode
18 (12h)	LinkMD® – Cable Diagnostic
19 (13h)	Digital PMA/PCS Status
20 (14h)	Reserved
21 (15h)	RXER Counter
22 (16h) – 26 (1Ah)	Reserved
27 (1Bh)	Interrupt Control/Status
28 (1Ch)	Digital Debug Control 1

Register Number (Hex)	Description
29 (1Dh) – 30 (1Eh)	Reserved
31 (1Fh)	PHY Control
Extended Registers	
257 (101h)	Strap Status
258 (102h)	Operation Mode Strap Override
259 (103h)	Operation Mode Strap Status
263 (107h)	Analog Test Register

4.1 Register Description

4.1.1 IEEE DEFINED REGISTERS

Address	Name	Description	Mode (Note 1)	Default
Register 0 (0h) – Basic Control				
0.15	Reset	1 = Software PHY reset 0 = Normal operation This bit is self-cleared after a ‘1’ is written to it.	RW/SC	0
0.14	Loop-back	1 = Loop-back mode 0 = Normal operation	RW	0
0.13	Speed Select (LSB)	[0.6, 0.13] [1,1] = Reserved [1,0] = 1000Mbps [0,1] = 100Mbps [0,0] = 10Mbps This bit is ignored if auto-negotiation is enabled (register 0.12 = 1).	RW	Hardware Setting
0.12	Auto-Negotiation Enable	1 = Enable auto-negotiation process 0 = Disable auto-negotiation process If enabled, auto-negotiation result overrides settings in register 0.13, 0.8 and 0.6.	RW	1
0.11	Power Down	1 = Power down mode 0 = Normal operation	RW	0
0.10	Isolate	1 = Electrical isolation of PHY from GMII/MII 0 = Normal operation	RW	0
0.9	Restart Auto-Negotiation	1 = Restart auto-negotiation process 0 = Normal operation This bit is self-cleared after a ‘1’ is written to it.	RW/SC	0
0.8	Duplex Mode	1 = Full-duplex 0 = Half-duplex	RW	Hardware Setting
0.7	Collision Test	1 = Enable COL test 0 = Disable COL test	RW	0

© 2009-2019 Microchip Technology Inc.

Address	Name	Description	Mode (Note 1)	Default
0.6	Speed Select (MSB)	[0.6, 0.13] [1,1] = Reserved [1,0] = 1000Mbps [0,1] = 100Mbps [0,0] = 10Mbps This bit is ignored if auto-negotiation is enabled (register 0.12 = 1).	RW	0
0.5:0	Reserved		RO	00_0000
Register 1 (1h) – Basic Status				
1.15	100Base-T4	1 = T4 capable 0 = Not T4 capable	RO	0
1.14	100Base-TX Full Duplex	1 = Capable of 100Mbps full-duplex 0 = Not capable of 100Mbps full-duplex	RO	1
1.13	100Base-TX Half Duplex	1 = Capable of 100Mbps half-duplex 0 = Not capable of 100Mbps half-duplex	RO	1
1.12	10Base-T Full Duplex	1 = Capable of 10Mbps full-duplex 0 = Not capable of 10Mbps full-duplex	RO	1
1.11	10Base-T Half Duplex	1 = Capable of 10Mbps half-duplex 0 = Not capable of 10Mbps half-duplex	RO	1
1.10:9	Reserved		RO	00
1.8	Extended Status	1 = Extended Status Information in Reg. 15. 0 = No Extended Status Information in Reg. 15.	RO	1
1.7	Reserved		RO	0
1.6	No Preamble	1 = Preamble suppression 0 = Normal preamble	RO	1
1.5	Auto-Negotiation Complete	1 = Auto-negotiation process completed 0 = Auto-negotiation process not completed	RO	0
1.4	Remote Fault	1 = Remote fault 0 = No remote fault	RO/LH	0
1.3	Auto-Negotiation Ability	1 = Capable to perform auto-negotiation 0 = Not capable to perform auto-negotiation	RO	1
1.2	Link Status	1 = Link is up 0 = Link is down	RO/LL	0
1.1	Jabber Detect	1 = Jabber detected 0 = Jabber not detected (default is low)	RO/LH	0
1.0	Extended Capability	1 = Supports extended capabilities registers	RO	1
Register 2 (2h) – PHY Identifier 1				
2.15:0	PHY ID Number	Assigned to the 3rd through 18th bits of the Organizationally Unique Identifier (OUI). Kendin Communication's OUI is 0010A1 (hex)	RO	0022h
Register 3 (3h) – PHY Identifier 2				
3.15:10	PHY ID Number	Assigned to the 19th through 24th bits of the Organizationally Unique Identifier (OUI). Kendin Communication's OUI is 0010A1 (hex)	RO	0001_01

Address	Name	Description	Mode (Note 1)	Default
3.9:4	Model Number	Six bit manufacturer's model number	RO	10_0001
3.3:0	Revision Number	Four bit manufacturer's revision number	RO	Indicates silicon revision
Register 4 (4h) – Auto-Negotiation Advertisement				
4.15	Next Page	1 = Next page capable 0 = No next page capability.	RW	0
4.14	Reserved		RO	0
4.13	Remote Fault	1 = Remote fault supported 0 = No remote fault	RW	0
4.12	Reserved		RO	0
4.11:10	Pause	[4.11, 4.10] [0,0] = No PAUSE [1,0] = Asymmetric PAUSE (link partner) [0,1] = Symmetric PAUSE [1,1] = Symmetric & Asymmetric PAUSE (local device)	RW	00
4.9	100Base-T4	1 = T4 capable 0 = No T4 capability	RO	0
4.8	100Base-TX Full-Duplex	1 = 100Mbps full-duplex capable 0 = No 100Mbps full-duplex capability	RW	1
4.7	100Base-TX Half-Duplex	1 = 100Mbps half-duplex capable 0 = No 100Mbps half-duplex capability	RW	1
4.6	10Base-T Full-Duplex	1 = 10Mbps full-duplex capable 0 = No 10Mbps full-duplex capability	RW	1
4.5	10Base-T Half-Duplex	1 = 10Mbps half-duplex capable 0 = No 10Mbps half-duplex capability	RW	1
4.4:0	Selector Field	[00001] = IEEE 802.3	RW	0_0001
Register 5 (5h) – Auto-Negotiation Link Partner Ability				
5.15	Next Page	1 = Next page capable 0 = No next page capability	RO	0
5.14	Acknowledge	1 = Link code word received from partner 0 = Link code word not yet received	RO	0
5.13	Remote Fault	1 = Remote fault detected 0 = No remote fault	RO	0
5.12	Reserved		RO	0
5.11:10	Pause	[5.11, 5.10] [0,0] = No PAUSE [1,0] = Asymmetric PAUSE (link partner) [0,1] = Symmetric PAUSE [1,1] = Symmetric & Asymmetric PAUSE (local device)	RW	00
5.9	100Base-T4	1 = T4 capable 0 = No T4 capability	RO	0
5.8	100Base-TX Full-Duplex	1 = 100Mbps full-duplex capable 0 = No 100Mbps full-duplex capability	RO	0
5.7	100Base-TX Half-Duplex	1 = 100Mbps half-duplex capable 0 = No 100Mbps half-duplex capability	RO	0
5.6	10Base-T Full-Duplex	1 = 10Mbps full-duplex capable 0 = No 10Mbps full-duplex capability	RO	0

© 2009-2019 Microchip Technology Inc.

Address	Name	Description	Mode (Note 1)	Default
5.5	10Base-T Half-Duplex	1 = 10Mbps half-duplex capable 0 = No 10Mbps half-duplex capability	RO	0
5.4:0	Selector Field	[00001] = IEEE 802.3	RO	0_0000
Register 6 (6h) – Auto-Negotiation Expansion				
6.15:5	Reserved		RO	0000_0000_000
6.4	Parallel Detection Fault	1 = Fault detected by parallel detection 0 = No fault detected by parallel detection.	RO/LH	0
6.3	Link Partner Next Page Able	1 = Link partner has next page capability 0 = Link partner does not have next page capability	RO	0
6.2	Next Page Able	1 = Local device has next page capability 0 = Local device does not have next page capability	RO	1
6.1	Page Received	1 = New page received 0 = New page not received yet	RO/LH	0
6.0	Link Partner Auto-Negotiation Able	1 = Link partner has auto-negotiation capability 0 = Link partner does not have auto-negotiation capability	RO	0
Register 7 (7h) – Auto-Negotiation Next Page				
7.15	Next Page	1 = Additional next page(s) will follow 0 = Last page	RW	0
7.14	Reserved		RO	0
7.13	Message Page	1 = Message page 0 = Unformatted page	RW	1
7.12	Acknowledge2	1 = Will comply with message 0 = Cannot comply with message	RW	0
7.11	Toggle	1 = Previous value of the transmitted link code word equaled logic one 0 = Logic zero	RO	0
7.10:0	Message Field	11-bit wide field to encode 2048 messages	RW	000_0000_0001
Register 8 (8h) – Auto-Negotiation Link Partner Next Page Ability				
8.15	Next Page	1 = Additional Next Page(s) will follow 0 = Last page	RO	0
8.14	Acknowledge	1 = Successful receipt of link word 0 = No successful receipt of link word	RO	0
8.13	Message Page	1 = Message page 0 = Unformatted page	RO	0
8.12	Acknowledge2	1 = Able to act on the information 0 = Not able to act on the information	RO	0
8.11	Toggle	1 = Previous value of transmitted link code word equal to logic zero 0 = Previous value of transmitted link code word equal to logic one	RO	0
8.10:0	Message Field		RO	000_0000_0000

Address	Name	Description	Mode (Note 1)	Default
Register 9 (9h) – 1000Base-T Control				
9:15:13	Test Mode Bits	Transmitter test mode operations [9.15:13] Mode [000] Normal Operation [001] Test mode 1 –Transmit waveform test [010] Test mode 2 –Transmit jitter test in Master mode [011] Test mode 3 –Transmit jitter test in Slave mode [100] Test mode 4 –Transmitter distortion test [101] Reserved, operations not identified [110] Reserved, operations not identified [111] Reserved, operations not identified	RW	000
9.12	MASTER-SLAVE Manual Config Enable	1 = Enable MASTER-SLAVE Manual configuration value 0 = Disable MASTER-SLAVE Manual configuration value	RW	0
9.11	MASTER-SLAVE Manual Config Value	1 = Configure PHY as MASTER during MASTER-SLAVE negotiation 0 = Configure PHY as SLAVE during MASTER-SLAVE negotiation This bit is ignored if MASTER-SLAVE Manual Config is disabled (register 9.12 = 0).	RW	0
9.10	Port Type	1 = Indicate the preference to operate as multiport device **(MASTER)** 0 = Indicate the preference to operate as single-port device (**SLAVE**) This bit is valid only if the MASTER-SLAVE Manual Config Enable bit is disabled (register 9.12 = 0).	RW	0
9.9	1000Base-T Full-Duplex	1 = Advertise PHY is 1000Base-T full-duplex capable 0 = Advertise PHY is not 1000Base-T full duplex capable	RW	1
9.8	1000Base-T Half-Duplex	1 = Advertise PHY is 1000Base-T half-duplex capable 0 = Advertise PHY is not 1000Base-T half-duplex capable	RW	Hardware Setting
9.7:0	Reserved	Write as 0, ignore on read	RO	
Register 10 (Ah) – 1000Base-T Status				
10.15	MASTER-SLAVE configuration fault	1 = MASTER-SLAVE configuration fault detected 0 = No MASTER-SLAVE configuration fault detected	RO/LH/SC	0
10.14	MASTER-SLAVE configuration resolution	1 = Local PHY configuration resolved to MASTER 0 = Local PHY configuration resolved to SLAVE	RO	0

© 2009-2019 Microchip Technology Inc.

Address	Name	Description	Mode (Note 1)	Default
10.13	Local Receiver Status	1 = Local Receiver OK (loc_rcvr_status = 1) 0 = Local Receiver not OK (loc_rcvr_status = 0)	RO	0
10.12	Remote Receiver Status	1 = Remote Receiver OK (rem_rcvr_status = 1) 0 = Remote Receiver not OK (rem_rcvr_status = 0)	RO	0
10.11	LP 1000T FD	1 = Link Partner is capable of 1000Base-T full-duplex 0 = Link Partner is not capable of 1000Base-T full-duplex	RO	0
10.10	LP 1000T HD	1 = Link Partner is capable of 1000Base-T half-duplex 0 = Link Partner is not capable of 1000Base-T half-duplex	RO	0
10.9:8	Reserved		RO	00
10.7:0	Idle Error Count	Cumulative count of errors detected when receiver is receiving idles and PMA_TX-MODE.indicate = SEND_N. The counter is incremented every symbol period that rxerror_status = ERROR.	RO/SC	0000_0000
Register 11 (Bh) – Extended Register – Control				
11.15	Extended Register – read/write select	1 = Write Extended Register 0 = Read Extended Register	RW	0
11.14:9	Reserved		RW	000_000
11.8	Extended Register – page	Select page for Extended Register	RW	0
11.7:0	Extended Register – address	Select Extended Register Address	RW	0000_0000
Register 12 (Ch) – Extended Register – Data Write				
12.15:0	Extended Register – write	16-bit value to write to Extend Register Address in register 11 (Bh) bits [7:0]	RW	0000_0000_0000_0000
Register 13 (Dh) – Extended Register – Data Read				
13.15:0	Extended Register – read	16-bit value read from Extend Register Address in register 11 (Bh) bits [7:0]	RO	0000_0000_0000_0000
Register 15 (Fh) – Extended – MII Status				
15.15	1000Base-X Full-duplex	1 = PHY able to perform 1000Base-X full-duplex 0 = PHY not able to perform 1000Base-X full-duplex	RO	0
15.14	1000Base-X Half-duplex	1 = PHY able to perform 1000Base-X half-duplex 0 = PHY not able to perform 1000Base-X half-duplex	RO	0

Address	Name	Description	Mode (Note 1)	Default
15.13	1000Base-T Full-duplex	1 = PHY able to perform 1000Base-T full-duplex 1000BASE-X 0 = PHY not able to perform 1000Base-T full-duplex	RO	1
15.12	1000Base-T Half-duplex	1 = PHY able to perform 1000Base-T half-duplex 0 = PHY not able to perform 1000Base-T half-duplex	RO	1
15.11:0	Reserved	Ignore when read	RO	-

Note 1:

RW = Read/Write.

RO = Read only.

SC = Self-cleared.

LH = Latch high.

LL = Latch low.

4.1.2 VENDOR SPECIFIC REGISTERS

Address	Name	Description	Mode (Note 1)	Default
Register 17 (11h) – Remote Loopback, LED Mode				
17.15:9	Reserved		RW	0000_001
17.8	Remote Loopback	1 = Enable Remote Loopback 0 = Disable Remote Loopback	RW	0
17.7:6	LED Mode Select	[17.7, 17.6] [0,0] = Reserved – not used [1,0] = 4-LED Configuration [0,1] = 5-LED Configuration [1,1] = 6-LED Configuration	RW	11
17.5:4	Reserved		RW	11
17.3	LED Test Enable	1 = Enable LED test mode 0 = Disable LED test mode	RW	0
17.2:1	Reserved		RW	00
17.0	Reserved		RO	0
Register 18 (12h) – LinkMD® – Cable Diagnostic				
18.15	Reserved		RW/SC	0
18.14:8	Reserved		RW	000_0000
18.7:0	Reserved		RO	0000_0000
Register 19 (13h) – Digital PMA/PCS Status				
19.15:3	Reserved		RO/LH	0000_0000_0000_0
19.2	1000Base-T Link Status	1000 Base-T Link Status 1 = Link status is OK 0 = Link status is not OK	RO	0
19.1	100Base-TX Link Status	100 Base-TX Link Status 1 = Link status is OK 0 = Link status is not OK	RO	0

© 2009-2019 Microchip Technology Inc.

Address	Name	Description	Mode (Note 1)	Default
19.0	Reserved		RO	0
Register 21 (15h) – RXER Counter				
21.15:0	RXER Counter	Receive error counter for Symbol Error frames	RO/RC	0000_0000_0000_0000
Register 27 (1Bh) – Interrupt Control/Status				
27.15	Jabber Interrupt Enable	1 = Enable Jabber Interrupt 0 = Disable Jabber Interrupt	RW	0
27.14	Receive Error Interrupt Enable	1 = Enable Receive Error Interrupt 0 = Disable Receive Error Interrupt	RW	0
27.13	Page Received Interrupt Enable	1 = Enable Page Received Interrupt 0 = Disable Page Received Interrupt	RW	0
27.12	Parallel Detect Fault Interrupt Enable	1 = Enable Parallel Detect Fault Interrupt 0 = Disable Parallel Detect Fault Interrupt	RW	0
27.11	Link Partner Acknowledge Interrupt Enable	1 = Enable Link Partner Acknowledge Interrupt 0 = Disable Link Partner Acknowledge Interrupt	RW	0
27.10	Link Down Interrupt Enable	1 = Enable Link Down Interrupt 0 = Disable Link Down Interrupt	RW	0
27.9	Remote Fault Interrupt Enable	1 = Enable Remote Fault Interrupt 0 = Disable Remote Fault Interrupt	RW	0
27.8	Link Up Interrupt Enable	1 = Enable Link Up Interrupt 0 = Disable Link Up Interrupt	RW	0
27.7	Jabber Interrupt	1 = Jabber occurred 0 = Jabber did not occurred	RO/RC	0
27.6	Receive Error Interrupt	1 = Receive Error occurred 0 = Receive Error did not occurred	RO/RC	0
27.5	Page Receive Interrupt	1 = Page Receive occurred 0 = Page Receive did not occurred	RO/RC	0
27.4	Parallel Detect Fault Interrupt	1 = Parallel Detect Fault occurred 0 = Parallel Detect Fault did not occurred	RO/RC	0
27.3	Link Partner Acknowledge Interrupt	1 = Link Partner Acknowledge occurred 0 = Link Partner Acknowledge did not occurred	RO/RC	0
27.2	Link Down Interrupt	1 = Link Down occurred 0 = Link Down did not occurred	RO/RC	0
27.1	Remote Fault Interrupt	1 = Remote Fault occurred 0 = Remote Fault did not occurred	RO/RC	0
27.0	Link Up Interrupt	1 = Link Up occurred 0 = Link Up did not occurred	RO/RC	0

Address	Name	Description	Mode (Note 1)	Default
Register 28 (1Ch) – Digital Debug Control 1				
28.15:8	Reserved		RW	0000_0000
28.7	mdi_set	mdi_set has no function when swapoff (reg28.6) is de-asserted 1 = When swapoff is asserted, if mdi_set is asserted, chip will operate at MDI mode 0 = When swapoff is asserted, if mdi_set is de-asserted, chip will operate at MDI-X mode	RW	0
28.6	swapoff	1 = Disable auto crossover function 0 = Enable auto crossover function	RW	0
28.5:1	Reserved		RW	00_000
28.0	PCS Loop-back	1 = Enable 10Base-T and 100Base-TX Loopback for register 0h bit 14 0 = normal function	RW	0
Register 31 (1Fh) – PHY Control				
31.15	Reserved		RW	0
31.14	Interrupt Level	1 = Interrupt pin active high 0 = Interrupt pin active low	RW	0
31.13:12	Reserved		RW	00
31.11:10	Reserved		RO/LH/RC	00
31.9	Enable Jab-ber	1 = Enable jabber counter 0 = Disable jabber counter	RW	1
31.8:7	Reserved		RW	00
31.6	Speed status 1000Base-T	1 = Indicate chip final speed status at 1000Base-T	RO	0
31.5	Speed status 100Base-TX	1 = Indicate chip final speed status at 100Base-TX	RO	0
31.4	Speed status 10Base-T	1 = Indicate chip final speed status at 10Base-T	RO	0
31.3	Duplex status	Indicate chip duplex status 1 = Full-duplex 0 = Half-duplex	RO	0
31.2	1000Base-T Mater/Slave status	1 = Indicate 1000Base-T Master mode 0 = Indicate 1000Base-T Slave mode	RO	0
31.1	Software Reset	1 = Reset chip, except all registers 0 = Disable reset	RW	0
31.0	Link Status Check Fail	1 = Fail 0 = Not Failing	RO	0

Note 1:

RW = Read/Write.

RC = Read-cleared

RO = Read only.

SC = Self-cleared.

LH = Latch high.

© 2009-2019 Microchip Technology Inc.

4.1.3 EXTENDED REGISTERS

Address	Name	Description	Mode (Note 1)	Default
Register 257 (101h) – Strap Status				
257.15:6	Reserved		RO	
257.5	CLK125_EN status	1 = CLK125_EN strap-in is enabled 0 = CLK125_EN strap-in is disabled	RO	
257.4:0	PHYAD[4:0] status	Strapped-in value for PHY Address	RO	
Register 258 (102h) – Operation Mode Strap Override				
258.15:8	Reserved		RW	
258.7	Tri-state all digital I/Os	1 = Tri-state all digital I/Os for further power saving during software power down	RW	0
258.6:5	Reserved		RW	
258.4	NAND Tree override	1 = Override strap-in for NAND Tree mode	RW	
258.3:2	Reserved		RW	
258.1	GMII / MII override	1 = Override strap-in for GMII / MII mode	RW	
258.0	Reserved		RW	
Register 259 (103h) – Operation Mode Strap Status				
259.15:5	Reserved		RO	
259.4	NAND Tree strap-in status	1 = Strap to NAND tree mode	RO	
259.3:2	Reserved		RO	
259.1	GMII / MII strap-in status	1 = Strap to GMII / MII mode	RO	
259.0	Reserved		RO	
Register 263 (107h) – Analog Test Register				
263.15	LDO disable	1 = LDO controller disable 0 = LDO controller enable	RW	0
263.14:9	Reserved		RW	000_000
263.8	Low frequency oscillator mode	1 = Low frequency oscillator mode enable 0 = Low frequency oscillator mode disable Use for further power saving during software power down	RW	0
263.7:0	Reserved		RW	0000_0000

Note 1:

RW = Read/Write.

RO = Read only.

5.0 OPERATIONAL CHARACTERISTICS

5.1 Absolute Maximum Ratings (See Note 1)

Supply Voltage

(DVDDL, AVDDL, AVDDL_PLL) ..... -0.5V to V_{DD}+10%

(AVDDH) ..... -0.5V to V_{DD} +10%

(DVDDH) ..... -0.5V to V_{DD} +10%

Input Voltage (all inputs) ..... -0.5V to V_{DD} +10%

Output Voltage (all outputs) ..... -0.5V to V_{DD} +10%

Lead Temperature (soldering, 10sec.) ..... 260°C

Storage Temperature (T_s) ..... -55°C to +150°C

5.2 Operating Ratings (See Note 2)

Supply Voltage

(DVDDL, AVDDL, AVDDL_PLL) ..... +1.140V to +1.260V

(AVDDH) ..... +3.135V to +3.465V

(DVDDH @ 3.3V) ..... +3.135V to +3.465V

(DVDDH @ 2.5V) ..... +2.375V to +2.625V

Ambient Temperature

(T_A Commercial: KSZ9021GQ) ..... 0°C to +70°C

(T_A Industrial: KSZ9021GQI) ..... –40°C to +85°C

Maximum Junction Temperature (T_J Max) ..... 125°C

Thermal Resistance (θ_{JA}) ..... 41.54°C/W

Thermal Resistance (θ_{JC}) ..... 19.78°C/W

5.3 Electrical Characteristics (See Note 3)

Symbol	Parameter	Condition	Min	Typ	Max	Units
Supply Current – Core / Digital I/Os						
I_{CORE}	1.2V total of: DVDDL (1.2V digital core) + AVDDL (1.2V analog core) + AVDDL_PLL (1.2V for PLL)	1000Base-T Link-up (no traffic)		522		mA
		1000Base-T Full-duplex @ 100% utilization		555		mA
		100Base-TX Link-up (no traffic)		159		mA
		100Base-TX Full-duplex @ 100% utilization		160		mA
		10Base-T Link-up (no traffic)		7		mA
		10Base-T Full-duplex @ 100% utilization		7		mA
		Power-saving Mode (cable un-plugged)		15		mA
		Software Power Down Mode (register 0.11 =1)		1.3		mA
		Chip Power Down Mode (strap-in pins MODE[3:0] = 0111)		1.2		mA

© 2009-2019 Microchip Technology Inc.

Symbol	Parameter	Condition	Min	Typ	Max	Units
$I_{DVD-DH_2.5}$	2.5V for digital I/Os (GMII / MII operating @ 2.5V)	1000Base-T Link-up (no traffic)		22		mA
		1000Base-T Full-duplex @ 100% utilization		39		mA
		100Base-TX Link-up (no traffic)		15		mA
		100Base-TX Full-duplex @ 100% utilization		19		mA
		10Base-T Link-up (no traffic)		10		mA
		10Base-T Full-duplex @ 100% utilization		11		mA
		Power-saving Mode (cable un-plugged)		14		mA
		Software Power Down Mode (register 0.11 =1)		8		mA
		Chip Power Down Mode (strap-in pins MODE[3:0] = 0111)		1		mA
$I_{DVD-DH_3.3}$	3.3V for digital I/Os (GMII / MII operating @ 3.3V)	1000Base-T Link-up (no traffic)		32		mA
		1000Base-T Full-duplex @ 100% utilization		57		mA
		100Base-TX Link-up (no traffic)		19		mA
		100Base-TX Full-duplex @ 100% utilization		25		mA
		10Base-T Link-up (no traffic)		13		mA
		10Base-T Full-duplex @ 100% utilization		17		mA
		Power-saving Mode (cable un-plugged)		23		mA
		Software Power Down Mode (register 0.11 =1)		16		mA
		Chip Power Down Mode (strap-in pins MODE[3:0] = 0111)		1		mA
Supply Current – Transceiver (equivalent to current draw through external transformer center taps for PHY transceivers with current-mode transmit drivers)						
I_{AVDDH}	3.3V for transceiver	1000Base-T Link-up (no traffic)		74		mA
		1000Base-T Full-duplex @ 100% utilization		73		mA
		100Base-TX Link-up (no traffic)		28		mA
		100Base-TX Full-duplex @ 100% utilization		28		mA
		10Base-T Link-up (no traffic)		35		mA
		10Base-T Full-duplex @ 100% utilization		43		mA
		Power-saving Mode (cable un-plugged)		35		mA
		Software Power Down Mode (register 0.11 =1)		2		mA
		Chip Power Down Mode (strap-in pins MODE[3:0] = 0111)		1		mA
CMOS Inputs						
V_{IH}	Input High Voltage	DVDDH = 3.3V	2.0			V
		DVDDH = 2.5V	1.8			V
V_{IL}	Input Low Voltage	DVDDH = 3.3V			0.8	V
		DVDDH = 2.5V			0.7	V
I_{IN}	Input Current	V_{IN} = GND ~ V_{DDIO}		-10	10	µA

Symbol	Parameter	Condition	Min	Typ	Max	Units
CMOS Outputs						
V_{OH}	Output High Voltage	DVDDH = 3.3V	2.4			V
		DVDDH = 2.5V	2.0			V
V_{OL}	Output Low Voltage	DVDDH = 3.3V			0.4	V
		DVDDH = 2.5V			0.4	V
$\|I_{oz}\|$	Output Tri-State Leakage				10	µA
LED Outputs						
I_{LED}	Output Drive Current	Each LED pin (LED1, LED2, LED4, LED5, LED6)		8		mA
100Base-TX Transmit (measured differentially after 1:1 transformer)						
V_O	Peak Differential Output Voltage	100Ω termination across differential output	0.95		1.05	V
V_{IMB}	Output Voltage Imbalance	100Ω termination across differential output			2	%
t_r, t_f	Rise/Fall Time		3		5	ns
	Rise/Fall Time Imbalance		0		0.5	ns
	Duty Cycle Distortion				± 0.25	ns
	Overshoot				5	%
V_{SET}	Reference Voltage of I_{SET}	$R(I_{SET})$ = 4.99K		0.535		V
	Output Jitter	Peak-to-peak		0.7	1.4	ns
10Base-T Transmit (measured differentially after 1:1 transformer)						
V_P	Peak Differential Output Voltage	100Ω termination across differential output	2.2		2.8	V
	Jitter Added	Peak-to-peak			3.5	ns
	Harmonic Rejection	Transmit all-one signal sequence		-31		dB
10Base-T Receive						
V_{SQ}	Squelch Threshold	5MHz square wave	300	400		mV

Note 1: Exceeding the absolute maximum rating may damage the device. Stresses greater than the absolute maximum rating may cause permanent damage to the device. Operation of the device at these or any other conditions above those specified in the operating sections of this specification is not implied. Maximum conditions for extended periods may affect reliability.

2: The device is not guaranteed to function outside its operating rating.

3: T_A = 25°C. Specification is for packaged product only.

© 2009-2019 Microchip Technology Inc.

6.0 TIMING DIAGRAMS

6.1 GMII Transmit Timing

FIGURE 6-1: GMII TRANSMIT TIMING – DATA INPUT TO PHY

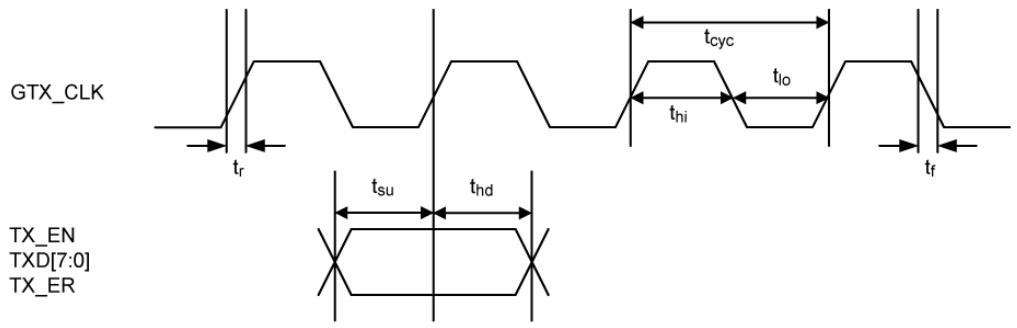

TABLE 6-1: GMII TRANSMIT TIMING PARAMETERS

Timing Parameter	Description	Min	Typ	Max	Unit
1000Base-T					
t_{cyc}	GTX_CLK period	7.5	8.0	8.5	ns
t_{su}	TX_EN, TXD[7:0], TX_ER setup time to rising edge of GTX_CLK	2.0			ns
t_{hd}	TX_EN, TXD[7:0], TX_ER hold time from rising edge of GTX_CLK	0			ns
t_{hi}	GTX_CLK high pulse width	2.5			ns
t_{lo}	GTX_CLK low pulse width	2.5			ns
t_r	GTX_CLK rise time			1.0	ns
t_f	GTX_CLK fall time			1.0	ns

6.2 GMII Receive Timing

FIGURE 6-2: GMII RECEIVE TIMING – DATA INPUT TO MAC

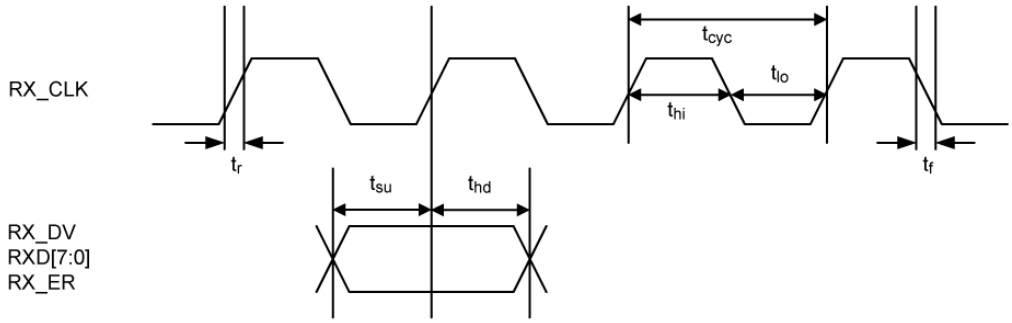

TABLE 6-2: GMII RECEIVE TIMING PARAMETERS

Timing Parameter	Description	Min	Typ	Max	Unit
1000Base-T					
t_{cyc}	RX_CLK period	7.5	8.0	8.5	ns
t_{su}	RX_DV, RXD[7:0], RX_ER setup time to rising edge of RX_CLK	2.5			ns
t_{hd}	RX_DV, RXD[7:0], RX_ER hold time from rising edge of RX_CLK	0.5			ns
t_{hi}	RX_CLK high pulse width	2.5			ns
t_{lo}	RX_CLK low pulse width	2.5			ns
t_r	RX_CLK rise time			1.0	ns
t_f	RX_CLK fall time			1.0	ns

© 2009-2019 Microchip Technology Inc.

6.3 MII Transmit Timing

FIGURE 6-3: MII TRANSMIT TIMING – DATA INPUT TO PHY

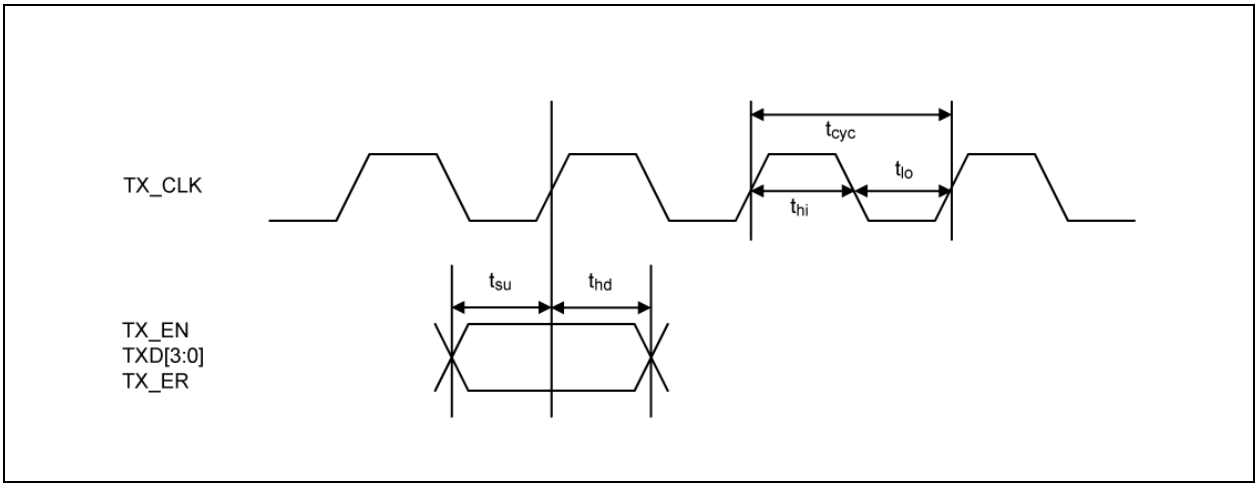

TABLE 6-3: MII TRANSMIT TIMING PARAMETERS

Timing Parameter	Description	Min	Typ	Max	Unit
10Base-T					
t_{cyc}	TX_CLK period		400		ns
t_{su}	TX_EN, TXD[3:0], TX_ER setup time to rising edge of TX_CLK	15			ns
t_{hd}	TX_EN, TXD[3:0], TX_ER hold time from rising edge of TX_CLK	0			ns
t_{hi}	TX_CLK high pulse width	140		260	ns
t_{lo}	TX_CLK low pulse width	140		260	ns
100Base-TX					
t_{cyc}	TX_CLK period		40		ns
t_{su}	TX_EN, TXD[3:0], TX_ER setup time to rising edge of TX_CLK	15			ns
t_{hd}	TX_EN, TXD[3:0], TX_ER hold time from rising edge of TX_CLK	0			ns
t_{hi}	TX_CLK high pulse width	14		26	ns
t_{lo}	TX_CLK low pulse width	14		26	ns

6.4 MII Receive Timing

FIGURE 6-4: MII RECEIVE TIMING – DATA INPUT TO MAC

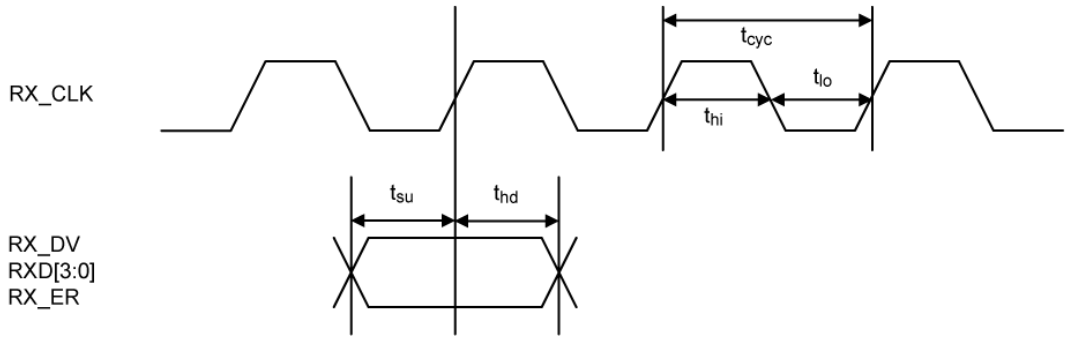

TABLE 6-4: MII RECEIVE TIMING PARAMETERS

Timing Parameter	Description	Min	Typ	Max	Unit
10Base-T					
t_{cyc}	RX_CLK period		400		ns
t_{su}	RX_DV, RXD[3:0], RX_ER setup time to rising edge of RX_CLK	10			ns
t_{hd}	RX_DV, RXD[3:0], RX_ER hold time from rising edge of RX_CLK	10			ns
t_{hi}	RX_CLK high pulse width	140		260	ns
t_{lo}	RX_CLK low pulse width	140		260	ns
100Base-TX					
t_{cyc}	RX_CLK period		40		ns
t_{su}	RX_DV, RXD[3:0], RX_ER setup time to rising edge of RX_CLK	10			ns
t_{hd}	RX_DV, RXD[3:0], RX_ER hold time from rising edge of RX_CLK	10			ns
t_{hi}	RX_CLK high pulse width	14		26	ns
t_{lo}	RX_CLK low pulse width	14		26	ns

© 2009-2019 Microchip Technology Inc.

6.5 Auto-Negotiation Timing

FIGURE 6-5: AUTO-NEGOTIATION FAST LINK PULSE (FLP) TIMING

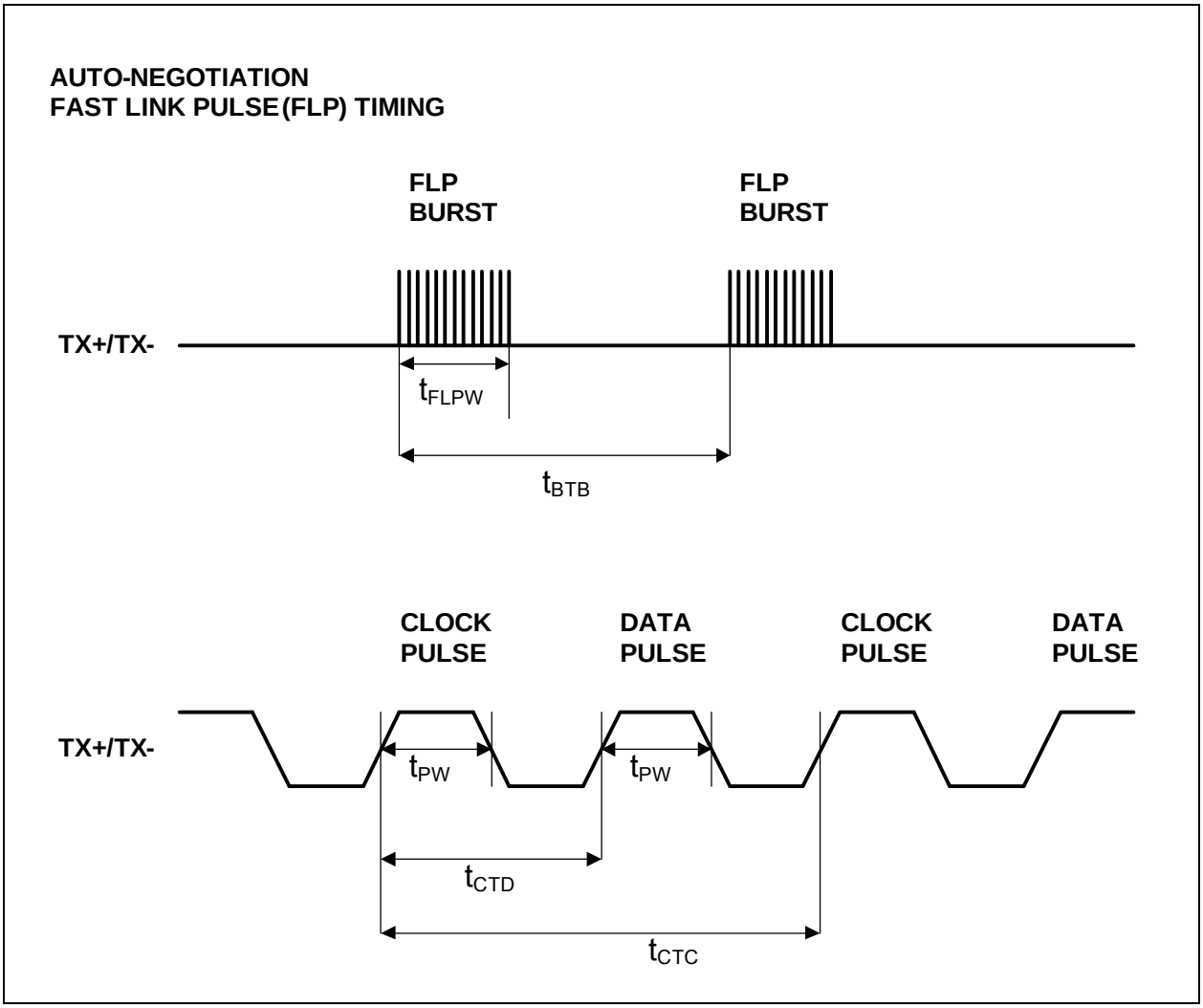

TABLE 6-5: AUTO-NEGOTIATION FAST LINK PULSE (FLP) TIMING PARAMETERS

Timing Parameter	Description	Min	Typ	Max	Units
t_{BTB}	FLP Burst to FLP Burst	8	16	24	ms
t_{FLPW}	FLP Burst width		2		ms
t_{PW}	Clock/Data Pulse width		100		ns
t_{CTD}	Clock Pulse to Data Pulse	55.5	64	69.5	µs
t_{CTC}	Clock Pulse to Clock Pulse	111	128	139	µs
	Number of Clock/Data Pulse per FLP Burst	17		33	

6.6 MDC/MDIO Timing

FIGURE 6-6: MDC/MDIO TIMING

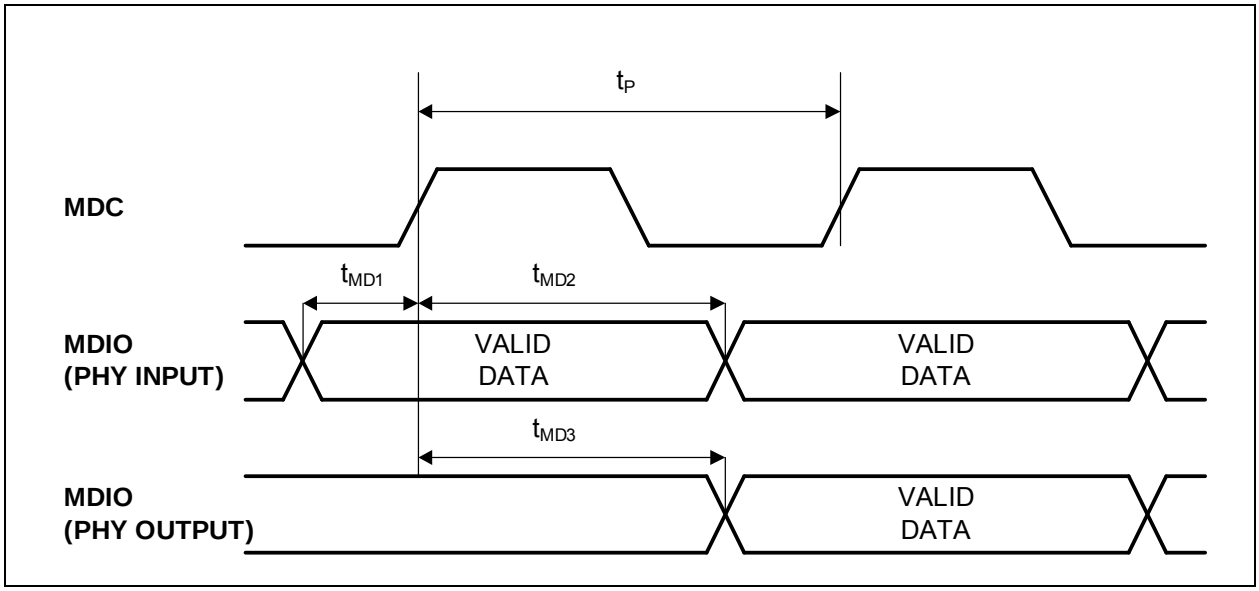

TABLE 6-6: MDC/MDIO TIMING PARAMETERS

Timing Parameter	Description	Min	Typ	Max	Unit
t_P	MDC period		400		ns
t_{1MD1}	MDIO (PHY input) setup to rising edge of MDC	10			ns
t_{MD2}	MDIO (PHY input) hold from rising edge of MDC	10			ns
t_{MD3}	MDIO (PHY output) delay from rising edge of MDC	0			ns

© 2009-2019 Microchip Technology Inc.

6.7 Reset Timing

The recommended KSZ9021GQ power-p reset timing is summarized in the following figure and table.

FIGURE 6-7: RESET TIMING

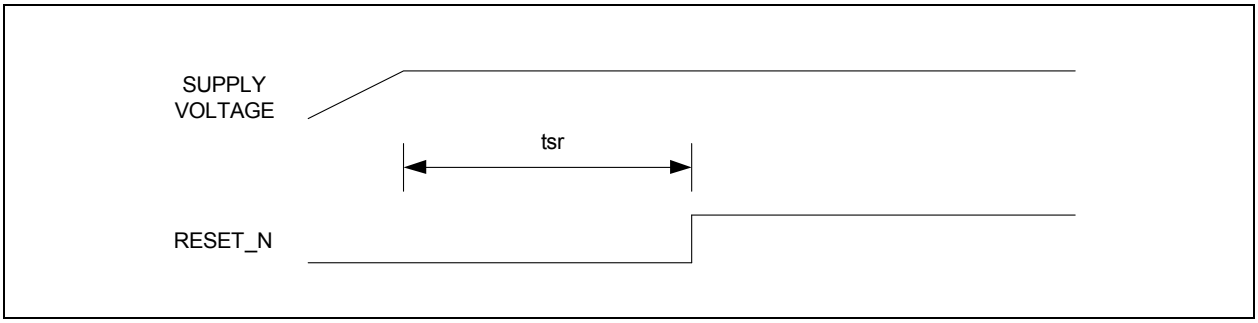

TABLE 6-7: RESET TIMING PARAMETERS

Parameter	Description	Min	Max	Units
t_{sr}	Stable supply voltage to reset high	10		ms

After the de-assertion of reset, it is recommended to wait a minimum of 100µs before starting programming on the MIIM (MDC/MDIO) Interface.

6.8 Reset Circuit

The following reset circuit is recommended for powering up the KSZ9021GQ if reset is triggered by the power supply.

FIGURE 6-8: RECOMMENDED RESET CIRCUIT

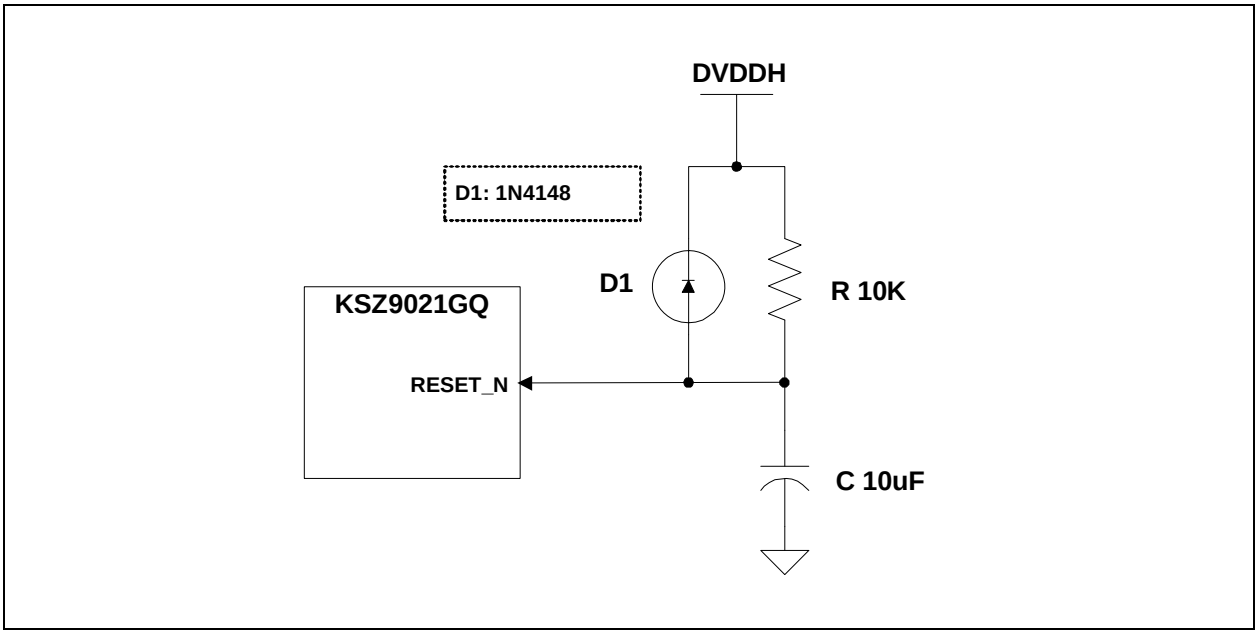

The following reset circuit is recommended for applications where reset is driven by another device (e.g., CPU or FPGA). At power-on-reset, R, C and D1 provide the necessary ramp rise time to reset the KSZ9021GQ device. The RST_OUT_N from CPU/FPGA provides the warm reset after power up.

FIGURE 6-9: RECOMMENDED RESET CIRCUIT FOR INTERFACING WITH CPU/FPGA RESET OUTPUT

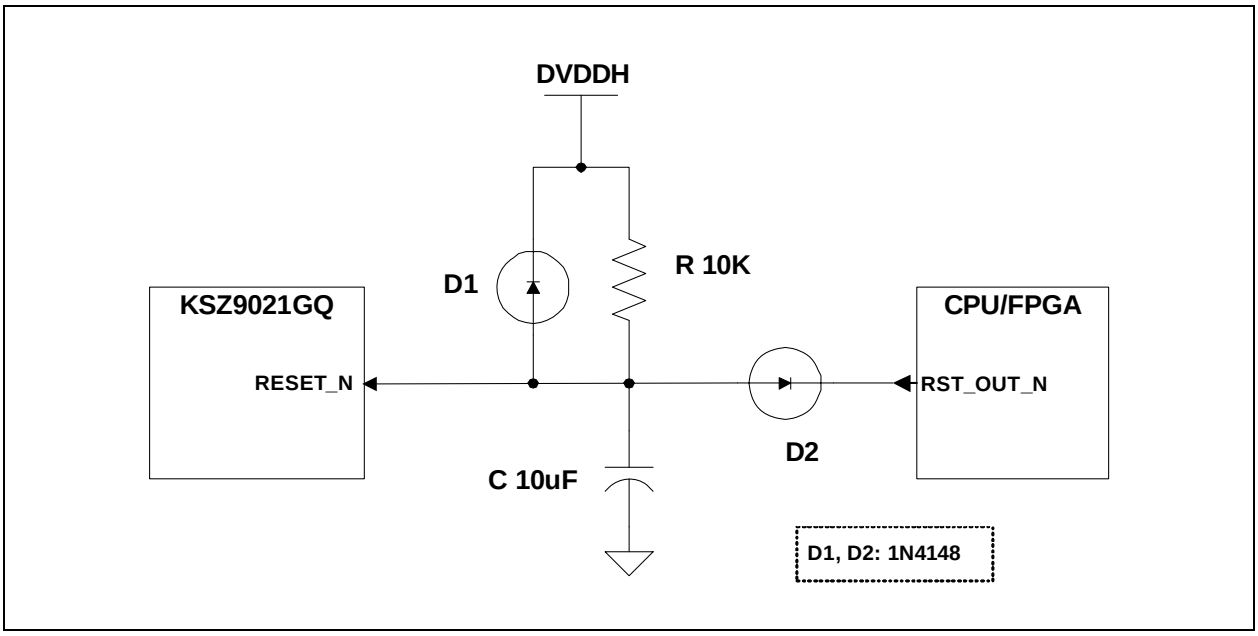

© 2009-2019 Microchip Technology Inc.

6.9 Reference Circuits – LED Strap-in Pins

The pull-up and pull-down reference circuits for the LED5/PHYAD4, LED4/PHYAD3, LED3/PHYAD2, LED2/PHYAD1 and LED1/PHYAD0 strapping pins are shown in the following figure.

FIGURE 6-10: REFERENCE CIRCUITS FOR LED STRAPPING PINS

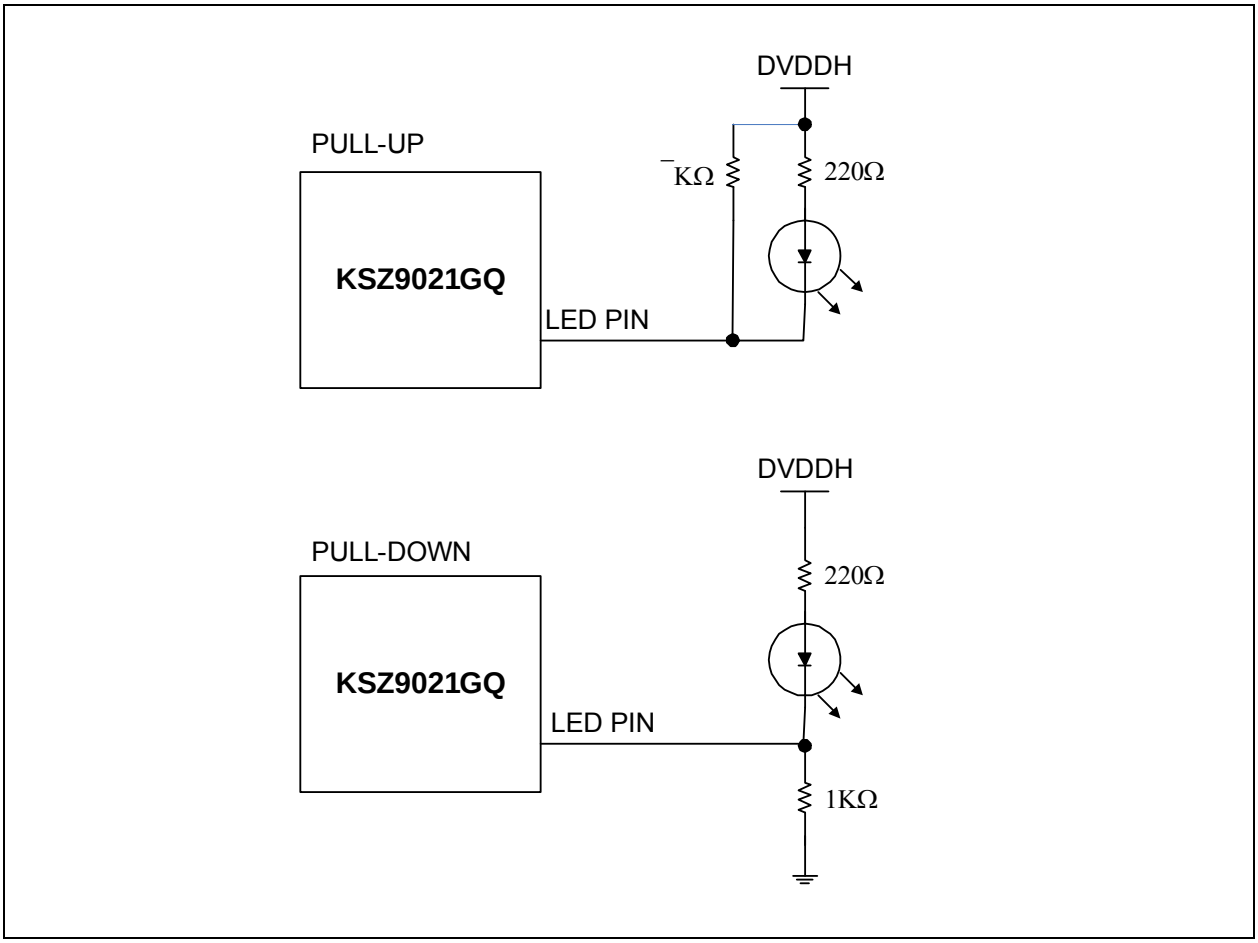

6.10 Reference Clock – Connection and Selection

A crystal or external clock source, such as an oscillator, is used to provide the reference clock for the KSZ9021GQ. The reference clock is 25 MHz for all operating modes of the KSZ9021GQ.

The following figure and table shows the reference clock connection to XI (pin 124) and XO (pin 123) of the KSZ9021GQ, and the reference clock selection criteria.

FIGURE 6-11: 25MHZ CRYSTAL / OSCILLATOR REFERENCE CLOCK CONNECTION

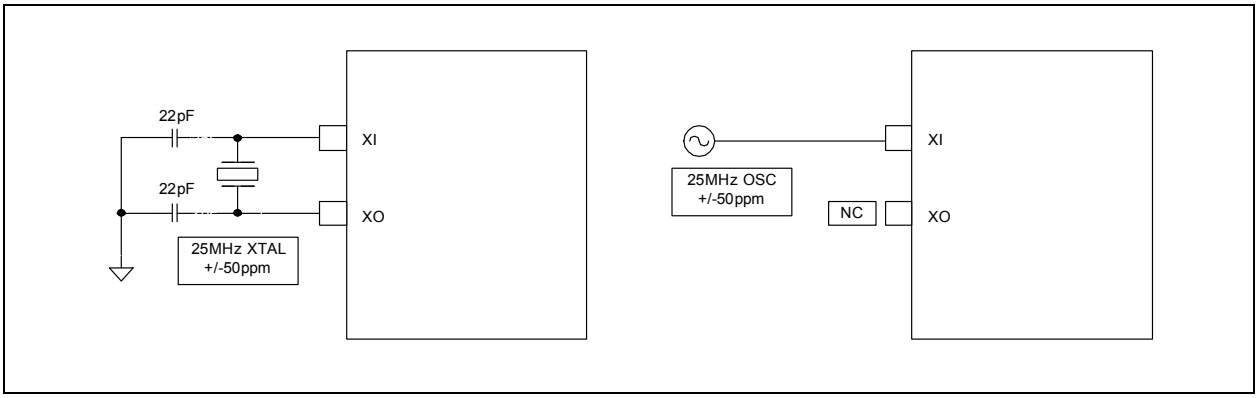

TABLE 6-8: REFERENCE CRYSTAL/CLOCK SELECTION CRITERIA

Characteristics	Value	Units
Frequency	25	MHz
Frequency tolerance (max)	±50	ppm

6.11 Magnetics Specification

A 1:1 isolation transformer is required at the line interface. An isolation transformer with integrated common-mode chokes is recommended for exceeding FCC requirements.

The following tables provide recommended magnetic characteristics and a list of qualified magnetics for the KSZ9021GQ.

TABLE 6-9: MAGNETICS SELECTION CRITERIA

Parameter	Value	Test Condition
Turns ratio	1 CT : 1 CT	
Open-circuit inductance (min.)	350µH	100mV, 100kHz, 8mA
Insertion loss (max.)	1.0dB	0MHz – 100MHz
HIPOT (min.)	1500Vrms	

TABLE 6-10: QUALIFIED SINGLE PORT 10/100/1000 MAGNETICS

Magnetic Manufacturer	Part Number	Auto MDI-X	Number of Port
Pulse	H5007NL	Yes	1
TDK	TLA-7T101LF	Yes	1

© 2009-2019 Microchip Technology Inc.

7.0 PACKAGE INFORMATION

FIGURE 7-1: 128-PIN (14MM X 20MM) PQFP PACKAGE OUTLINE AND RECOMMENDED LAND PATTERN

TITLE
128 LEAD PQFP 14x20mm PACKAGE OUTLINE & RECOMMENDED LAND PATTERN

DRAWING #	PQFP14x20-128LD-PL-1	UNIT	MM [INCHES]

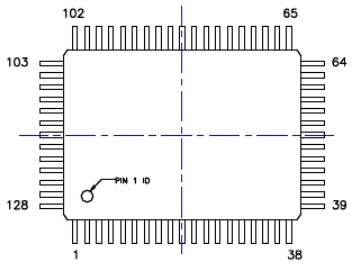

TOP VIEW
Note 1,2,3

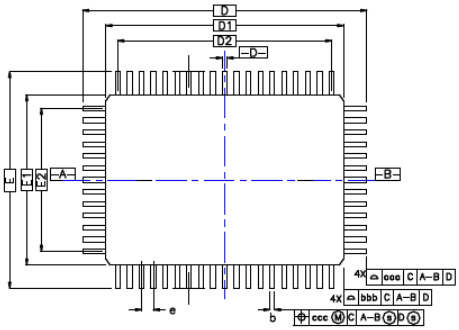

BOTTOM VIEW
Note 1,2,3

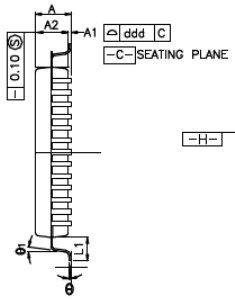

SIDE VIEW
Note 1,2,3

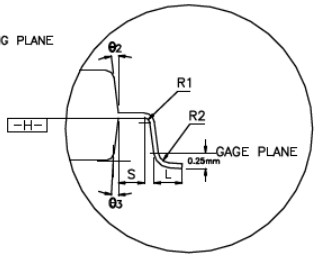

DETAILED VIEW

SYMBOL	MILLIMETER			INCH		
	MIN.	NOM.	MAX.	MIN.	NOM.	MAX.
A	—	—	3.40	—	—	0.134
A1	0.25	—	—	0.010	—	—
A2	2.50	2.72	2.90	0.098	0.107	0.114
D	23.20 BASIC			0.913 BASIC		
D1	20.00 BASIC			0.787 BASIC		
E	17.20 BASIC			0.677 BASIC		
E1	14.00 BASIC			0.551 BASIC		
R2	0.13	—	0.30	0.005	—	0.012
R1	0.13	—	—	0.005	—	—
θ	0°	—	7°	0°	—	7°
θ1	0°	—	—	0°	—	—
θ2 , θ3	15° REF			15° REF		

SYMBOL	MILLIMETER			INCH		
	MIN.	NOM.	MAX.	MIN.	NOM.	MAX.
c	0.11	0.15	0.23	0.004	0.006	0.009
L	0.73	0.88	1.03	0.029	0.035	0.041
L1	1.60 REF			0.063 REF		
S	0.20	—	—	0.008	—	—
b	0.170	0.200	0.270	0.007	0.008	0.011
e	0.50 BSC.			0.020 BSC		
D2	18.50			0.728		
E2	12.50			0.492		
TOLERANCES OF FORM AND POSITION						
aaa	0.20			0.008		
bbb	0.20			0.008		
ccc	0.08			0.003		
ddd	0.08			0.003		

COTROL DIMENSIONS ARE IN MILLIMETERS.

NOTES :

1. DIMENSION D1 AND E1 DO NOT INCLUDE MOLD PROTRUSION. ALLOWABLE PROTRUSION IS 0.25mm PER SIDE. DIMENSIONS D1 AND E1 DO INCLUDE MOLD MISMATCH AND ARE DETERMINED AT DATUM PLANE -H-
2. DIMENSION b DOES NOT INCLUDE DAMBAR PROTRUSION. ALLOWABLE DAMBAR PROTRUSION SHALL BE 0.08mm TOTAL IN EXCESS OF THE b DIMENSION AT MAXIMUM MATERIAL CONDITION. DAMBAR CANNOT BE LOCATED ON THE LOWER RADIUS OR THE LEAD FOOT.
3. THE DIAGRAMS DO NOT REPRESNET THE ACTUAL PIN COUNT.
4. ALL UNITS IN mm. TOLERANCE +/- 0.05 IF NOT NOTED.

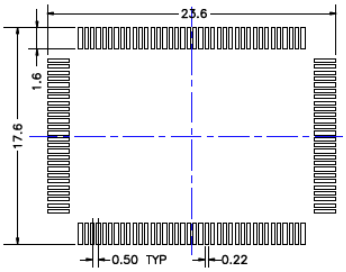

RECOMMENDED LAND PATTERN
Note 4

Note: For the most current package drawings, please see the Microchip Packaging Specification located at http://www.microchip.com/packaging.

APPENDIX A: DATA SHEET REVISION HISTORY

TABLE A-1: REVISION HISTORY

Revision	Section/Figure/Entry	Correction
DS00003115A (07-18-19)	Replaces previous Micrel version M9999-091010-1.2	
1.2 (09-10-10)	All	Added support for 2.5V VDD I/O. Added LED drive current. Updated KSZ9021GQ pin outs throughout data sheet to reflect pin out changes for silicon revision A3. Updated boilerplate.
1.1 (10-13-09)	All	Updated current consumption in Electrical Characteristics section. Corrected data sheet omission of register 1 bit 8 for 1000Base-T Extended Status information. Added the following register bits to provide further power saving during software power down: Tri-state all digital I/Os (reg. 258.7), LDO disable (reg. 263.15), Low frequency oscillator mode (reg. 263.8). Corrected tsu minimum for 1000Base-T in GMII Receive Timing Parameters table.
1.0 (01-16-09)	Data Sheet created	

© 2009-2019 Microchip Technology Inc.

THE MICROCHIP WEB SITE

Microchip provides online support via our WWW site at www.microchip.com. This web site is used as a means to make files and information easily available to customers. Accessible by using your favorite Internet browser, the web site contains the following information:

- **Product Support** – Data sheets and errata, application notes and sample programs, design resources, user's guides and hardware support documents, latest software releases and archived software
- **General Technical Support** – Frequently Asked Questions (FAQ), technical support requests, online discussion groups, Microchip consultant program member listing
- **Business of Microchip** – Product selector and ordering guides, latest Microchip press releases, listing of seminars and events, listings of Microchip sales offices, distributors and factory representatives

CUSTOMER CHANGE NOTIFICATION SERVICE

Microchip's customer notification service helps keep customers current on Microchip products. Subscribers will receive e-mail notification whenever there are changes, updates, revisions or errata related to a specified product family or development tool of interest.

To register, access the Microchip web site at www.microchip.com. Under "Support", click on "Customer Change Notification" and follow the registration instructions.

CUSTOMER SUPPORT

Users of Microchip products can receive assistance through several channels:

- Distributor or Representative
- Local Sales Office
- Field Application Engineer (FAE)
- Technical Support

Customers should contact their distributor, representative or field application engineer (FAE) for support. Local sales offices are also available to help customers. A listing of sales offices and locations is included in the back of this document.

Technical support is available through the web site at: http://www.microchip.com/support

PRODUCT IDENTIFICATION SYSTEM

To order or obtain information, e.g., on pricing or delivery, refer to the factory or the listed sales office.

PART NO.	[X]	-	XXX	-	[X](1)
Device	Temperature Range		Package		Tape and Reel Option

Device:	KSZ9021GQ			
Temperature:	Blank	=	0°C to +70°C	(Commercial)
	I	=	-40°C to +85°C	(Industrial)
Package:	GQ	=	128-pin PQFP	
Tape and Reel Option:	Blank	=	Standard packaging (tray)	
	TR	=	Tape and Reel(1)	

Examples:

a) KSZ9021GQ
Commercial Temperature, GMII/MII
128-pin PQFP,
RoHS Compliant package, Tray

b) KSZ9021GQI
Industrial Temperature, GMII/MII
128-pin PQFP,
RoHS Compliant package, Tray

Note 1: Tape and Reel identifier only appears in the catalog part number description. This identifier is used for ordering purposes and is not printed on the device package. Check with your Microchip Sales Office for package availability with the Tape and Reel option.

© 2009-2019 Microchip Technology Inc.

Note the following details of the code protection feature on Microchip devices:

- Microchip products meet the specification contained in their particular Microchip Data Sheet.
- Microchip believes that its family of products is one of the most secure families of its kind on the market today, when used in the intended manner and under normal conditions.
- There are dishonest and possibly illegal methods used to breach the code protection feature. All of these methods, to our knowledge, require using the Microchip products in a manner outside the operating specifications contained in Microchip's Data Sheets. Most likely, the person doing so is engaged in theft of intellectual property.
- Microchip is willing to work with the customer who is concerned about the integrity of their code.
- Neither Microchip nor any other semiconductor manufacturer can guarantee the security of their code. Code protection does not mean that we are guaranteeing the product as "unbreakable."

Code protection is constantly evolving. We at Microchip are committed to continuously improving the code protection features of our products. Attempts to break Microchip's code protection feature may be a violation of the Digital Millennium Copyright Act. If such acts allow unauthorized access to your software or other copyrighted work, you may have a right to sue for relief under that Act.

Information contained in this publication regarding device applications and the like is provided only for your convenience and may be superseded by updates. It is your responsibility to ensure that your application meets with your specifications. MICROCHIP MAKES NO REPRESENTATIONS OR WARRANTIES OF ANY KIND WHETHER EXPRESS OR IMPLIED, WRITTEN OR ORAL, STATUTORY OR OTHERWISE, RELATED TO THE INFORMATION, INCLUDING BUT NOT LIMITED TO ITS CONDITION, QUALITY, PERFORMANCE, MERCHANTABILITY OR FITNESS FOR PURPOSE**.** Microchip disclaims all liability arising from this information and its use. Use of Microchip devices in life support and/or safety applications is entirely at the buyer's risk, and the buyer agrees to defend, indemnify and hold harmless Microchip from any and all damages, claims, suits, or expenses resulting from such use. No licenses are conveyed, implicitly or otherwise, under any Microchip intellectual property rights unless otherwise stated.

Trademarks

The Microchip name and logo, the Microchip logo, Adaptec, AnyRate, AVR, AVR logo, AVR Freaks, BesTime, BitCloud, chipKIT, chipKIT logo, CryptoMemory, CryptoRF, dsPIC, FlashFlex, flexPWR, HELDO, IGLOO, JukeBlox, KeeLoq, Kleer, LANCheck, LinkMD, maXStylus, maXTouch, MediaLB, megaAVR, Microsemi, Microsemi logo, MOST, MOST logo, MPLAB, OptoLyzer, PackeTime, PIC, picoPower, PICSTART, PIC32 logo, PolarFire, Prochip Designer, QTouch, SAM-BA, SenGenuity, SpyNIC, SST, SST Logo, SuperFlash, Symmetricom, SyncServer, Tachyon, TempTrackr, TimeSource, tinyAVR, UNI/O, Vectron, and XMEGA are registered trademarks of Microchip Technology Incorporated in the U.S.A. and other countries.

APT, ClockWorks, The Embedded Control Solutions Company, EtherSynch, FlashTec, Hyper Speed Control, HyperLight Load, IntelliMOS, Libero, motorBench, mTouch, Powermite 3, Precision Edge, ProASIC, ProASIC Plus, ProASIC Plus logo, Quiet-Wire, SmartFusion, SyncWorld, Temux, TimeCesium, TimeHub, TimePictra, TimeProvider, Vite, WinPath, and ZL are registered trademarks of Microchip Technology Incorporated in the U.S.A.

Adjacent Key Suppression, AKS, Analog-for-the-Digital Age, Any Capacitor, AnyIn, AnyOut, BlueSky, BodyCom, CodeGuard, CryptoAuthentication, CryptoAutomotive, CryptoCompanion, CryptoController, dsPICDEM, dsPICDEM.net, Dynamic Average Matching, DAM, ECAN, EtherGREEN, In-Circuit Serial Programming, ICSP, INICnet, Inter-Chip Connectivity, JitterBlocker, KleerNet, KleerNet logo, memBrain, Mindi, MiWi, MPASM, MPF, MPLAB Certified logo, MPLIB, MPLINK, MultiTRAK, NetDetach, Omniscient Code Generation, PICDEM, PICDEM.net, PICkit, PICtail, PowerSmart, PureSilicon, QMatrix, REAL ICE, Ripple Blocker, SAM-ICE, Serial Quad I/O, SMART-I.S., SQI, SuperSwitcher, SuperSwitcher II, Total Endurance, TSHARC, USBCheck, VariSense, ViewSpan, WiperLock, Wireless DNA, and ZENA are trademarks of Microchip Technology Incorporated in the U.S.A. and other countries.

SQTP is a service mark of Microchip Technology Incorporated in the U.S.A.
The Adaptec logo, Frequency on Demand, Silicon Storage Technology, and Symmcom are registered trademarks of Microchip Technology Inc. in other countries.
GestIC is a registered trademark of Microchip Technology Germany II GmbH & Co. KG, a subsidiary of Microchip Technology Inc., in other countries.

All other trademarks mentioned herein are property of their respective companies.

© 2009-2019, Microchip Technology Incorporated, All Rights Reserved.

ISBN: 9781522445920

For information regarding Microchip's Quality Management Systems, please visit www.microchip.com/quality.

Worldwide Sales and Service

AMERICAS

Corporate Office
2355 West Chandler Blvd.
Chandler, AZ 85224-6199
Tel: 480-792-7200
Fax: 480-792-7277
Technical Support:
http://www.microchip.com/support
Web Address:
www.microchip.com

Atlanta
Duluth, GA
Tel: 678-957-9614
Fax: 678-957-1455

Austin, TX
Tel: 512-257-3370

Boston
Westborough, MA
Tel: 774-760-0087
Fax: 774-760-0088

Chicago
Itasca, IL
Tel: 630-285-0071
Fax: 630-285-0075

Dallas
Addison, TX
Tel: 972-818-7423
Fax: 972-818-2924

Detroit
Novi, MI
Tel: 248-848-4000

Houston, TX
Tel: 281-894-5983

Indianapolis
Noblesville, IN
Tel: 317-773-8323
Fax: 317-773-5453
Tel: 317-536-2380

Los Angeles
Mission Viejo, CA
Tel: 949-462-9523
Fax: 949-462-9608
Tel: 951-273-7800

Raleigh, NC
Tel: 919-844-7510

New York, NY
Tel: 631-435-6000

San Jose, CA
Tel: 408-735-9110
Tel: 408-436-4270

Canada - Toronto
Tel: 905-695-1980
Fax: 905-695-2078

ASIA/PACIFIC

Australia - Sydney
Tel: 61-2-9868-6733

China - Beijing
Tel: 86-10-8569-7000

China - Chengdu
Tel: 86-28-8665-5511

China - Chongqing
Tel: 86-23-8980-9588

China - Dongguan
Tel: 86-769-8702-9880

China - Guangzhou
Tel: 86-20-8755-8029

China - Hangzhou
Tel: 86-571-8792-8115

China - Hong Kong SAR
Tel: 852-2943-5100

China - Nanjing
Tel: 86-25-8473-2460

China - Qingdao
Tel: 86-532-8502-7355

China - Shanghai
Tel: 86-21-3326-8000

China - Shenyang
Tel: 86-24-2334-2829

China - Shenzhen
Tel: 86-755-8864-2200

China - Suzhou
Tel: 86-186-6233-1526

China - Wuhan
Tel: 86-27-5980-5300

China - Xian
Tel: 86-29-8833-7252

China - Xiamen
Tel: 86-592-2388138

China - Zhuhai
Tel: 86-756-3210040

ASIA/PACIFIC

India - Bangalore
Tel: 91-80-3090-4444

India - New Delhi
Tel: 91-11-4160-8631

India - Pune
Tel: 91-20-4121-0141

Japan - Osaka
Tel: 81-6-6152-7160

Japan - Tokyo
Tel: 81-3-6880- 3770

Korea - Daegu
Tel: 82-53-744-4301

Korea - Seoul
Tel: 82-2-554-7200

Malaysia - Kuala Lumpur
Tel: 60-3-7651-7906

Malaysia - Penang
Tel: 60-4-227-8870

Philippines - Manila
Tel: 63-2-634-9065

Singapore
Tel: 65-6334-8870

Taiwan - Hsin Chu
Tel: 886-3-577-8366

Taiwan - Kaohsiung
Tel: 886-7-213-7830

Taiwan - Taipei
Tel: 886-2-2508-8600

Thailand - Bangkok
Tel: 66-2-694-1351

Vietnam - Ho Chi Minh
Tel: 84-28-5448-2100

EUROPE

Austria - Wels
Tel: 43-7242-2244-39
Fax: 43-7242-2244-393

Denmark - Copenhagen
Tel: 45-4450-2828
Fax: 45-4485-2829

Finland - Espoo
Tel: 358-9-4520-820

France - Paris
Tel: 33-1-69-53-63-20
Fax: 33-1-69-30-90-79

Germany - Garching
Tel: 49-8931-9700

Germany - Haan
Tel: 49-2129-3766400

Germany - Heilbronn
Tel: 49-7131-72400

Germany - Karlsruhe
Tel: 49-721-625370

Germany - Munich
Tel: 49-89-627-144-0
Fax: 49-89-627-144-44

Germany - Rosenheim
Tel: 49-8031-354-560

Israel - Ra'anana
Tel: 972-9-744-7705

Italy - Milan
Tel: 39-0331-742611
Fax: 39-0331-466781

Italy - Padova
Tel: 39-049-7625286

Netherlands - Drunen
Tel: 31-416-690399
Fax: 31-416-690340

Norway - Trondheim
Tel: 47-7288-4388

Poland - Warsaw
Tel: 48-22-3325737

Romania - Bucharest
Tel: 40-21-407-87-50

Spain - Madrid
Tel: 34-91-708-08-90
Fax: 34-91-708-08-91

Sweden - Gothenberg
Tel: 46-31-704-60-40

Sweden - Stockholm
Tel: 46-8-5090-4654

UK - Wokingham
Tel: 44-118-921-5800
Fax: 44-118-921-5820

© 2009-2019 Microchip Technology Inc.

Mouser Electronics

Authorized Distributor

Click to View Pricing, Inventory, Delivery & Lifecycle Information:

Microchip:

KSZ9021GN TR KSZ9021GQI KSZ9021GN KSZ9021GQ KSZ9021GNI KSZ9021GN-TR