USB2422

2-Port USB 2.0 Hi-Speed Hub Controller

General Description

The Microchip USB2422 hub is a low-power, single transaction translator, hub controller IC with two downstream ports for embedded USB solutions. The hub controller can attach to an upstream port as a Hi-Speed and Full-Speed hub or as a Full-Speed only hub. The hub supports Low-Speed, Full-Speed, and Hi-Speed (when configured as a Hi-Speed hub) downstream devices on the enabled downstream ports.

All required resistors on the USB ports are integrated into the hub. This includes all series termination resistors on D+ and D- pins and all required pull-down and pull-up resistors on D+ and D- pins. The over-current sense inputs for the downstream facing ports have internal pull-up resistors.

Features

- Supports the *USB Battery Charging Specification, Revision 1.1*
- Fully integrated USB termination and pull-up/pull-down resistors
- Supports a single external 3.3 V supply source; internal regulators provide 1.2 V internal core voltage
- On-chip driver for 24 MHz crystal resonator or external 24 MHz clock input
- ESD protection up to 6 kV on all USB pins
- Supports self-powered operation
- The hub contains a built-in default configuration; no external configuration options or components are required
- Downstream ports as non-removable ports
- Downstream port power control and over-current detection on an individual or ganged basis
- Supports compound devices on a port-by-port basis
- 24-pin SQFN (4x4 mm), RoHS-compliant package
- Commercial temperature range support: 0ºC to +70ºC
- Industrial temperature range support: -40ºC to +85ºC

Highlights

- High performance, low-power, small footprint hub controller IC with two downstream ports
- Fully compliant with the *USB 2.0 Specification*
- Optimized for minimal bill-of-materials and low-cost designs

Applications

- LCD monitors and TVs
- Multi-function USB peripherals
- PC motherboards
- Set-top boxes, DVD players, DVR/PVR
- Printers and scanners
- PC media drive bay
- Portable hub boxes
- Mobile PC docking
- Embedded systems
- Gaming consoles
- Cable/DSL modems
- HDD enclosures
- KVM switches
- Server front panels
- Point-of-Sale (POS) systems
- IP telephony
- Automobile/home audio systems
- Thin client terminals

© 2013 - 2015 Microchip Technology Inc.

TO OUR VALUED CUSTOMERS

It is our intention to provide our valued customers with the best documentation possible to ensure successful use of your Microchip products. To this end, we will continue to improve our publications to better suit your needs. Our publications will be refined and enhanced as new volumes and updates are introduced.

If you have any questions or comments regarding this publication, please contact the Marketing Communications Department via E-mail at **docerrors@microchip.com**. We welcome your feedback.

Most Current Data Sheet

To obtain the most up-to-date version of this data sheet, please register at our Worldwide Web site at:

http://www.microchip.com

You can determine the version of a data sheet by examining its literature number found on the bottom outside corner of any page. The last character of the literature number is the version number, (e.g., DS30000000A is version A of document DS30000000).

Errata

An errata sheet, describing minor operational differences from the data sheet and recommended workarounds, may exist for current devices. As device/documentation issues become known to us, we will publish an errata sheet. The errata will specify the revision of silicon and revision of document to which it applies.

To determine if an errata sheet exists for a particular device, please check with one of the following:

- Microchip's Worldwide Web site; http://www.microchip.com
- Your local Microchip sales office (see last page)

When contacting a sales office, please specify which device, revision of silicon and data sheet (include -literature number) you are using.

Customer Notification System

Register on our web site at **www.microchip.com** to receive the most current information on all of our products.

© 2013 - 2015 Microchip Technology Inc.

Table of Contents

1.0 Block Diagram 4
2.0 Pin Descriptions 6
3.0 Battery Charging Support 14
4.0 Configuration Options 16
5.0 DC Parameters 35
6.0 AC Specifications 38
7.0 Package Outline 40
Appendix A: Acronyms 41
Appendix B: References 42
Appendix C: Data Sheet Revision History 43
The Microchip Web Site 44
Customer Change Notification Service 44
Customer Support 44
Product Identification System 45

1.0 BLOCK DIAGRAM

FIGURE 1-1: USB2422 BLOCK DIAGRAM

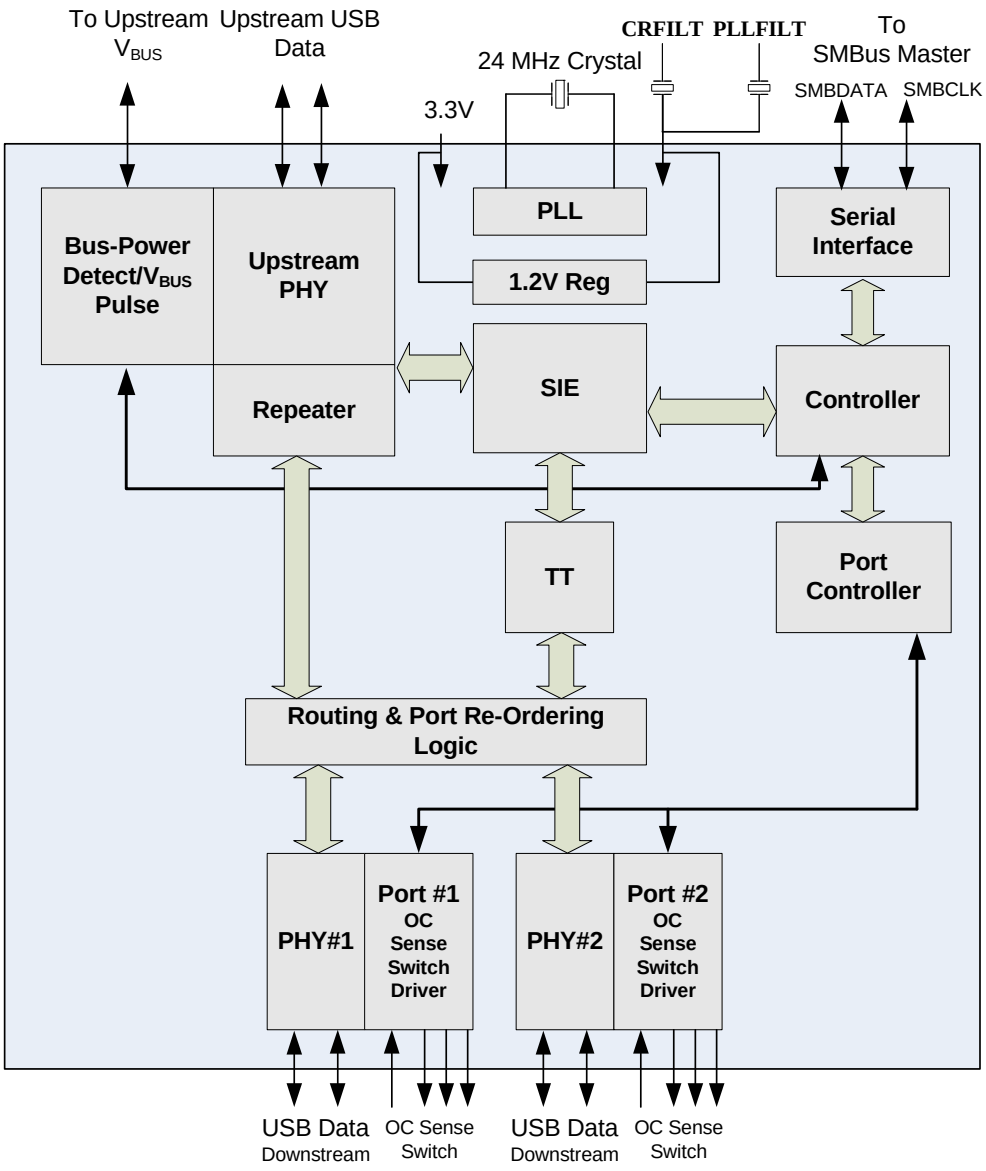

© 2013 - 2015 Microchip Technology Inc.

Within this manual, the following abbreviations and symbols are used to improve readability.

Example	Description
BIT	Name of a single bit within a field
FIELD.BIT	Name of a single bit (BIT) in FIELD
x…y	Range from x to y, inclusive
BITS[m:n]	Groups of bits from m to n, inclusive
PIN	Pin Name
zzzzb	Binary number (value zzzz)
0xzzz	Hexadecimal number (value zzz)
zzh	Hexadecimal number (value zz)
rsvd	Reserved memory location. Must write 0, read value indeterminate
`code`	Instruction code, or API function or parameter
Multi Word Name	Used for multiple words that are considered a single unit, such as: *Resource Allocate* message, or *Connection Label*, or *Decrement Stack Pointer* instruction.
Section Name	Section or Document name.
x	Don't care
<Parameter>	<> indicate a Parameter is optional or is only used under some conditions
{,Parameter}	Braces indicate Parameter(s) that repeat one or more times.
[Parameter]	Brackets indicate a nested Parameter. This Parameter is not real and actually decodes into one or more real parameters.

2.0 PIN DESCRIPTIONS

This chapter is organized by a set of pin configurations followed by a corresponding pin list organized by function according to their associated interface. A detailed description list of each signal (named in the pin list) is organized by function in Table 2-2, “USB2422 Pin Descriptions,” on page 7. Refer to Table 2-3, “Buffer Type Descriptions,” on page 10 for a list of buffer types.

An *N* at the end of a signal name indicates that the active (asserted) state occurs when the signal is at a low voltage level. When the *N* is not present, the signal is asserted when it is at a high voltage level. The terms assertion and negation are used exclusively in order to avoid confusion when working with a mixture of active low and active high signals. The term assert, or assertion, indicates that a signal is active, independent of whether that level is represented by a high or low voltage. The term negate, or negation, indicates that a signal is inactive.

2.1 Pin Configuration

FIGURE 2-1: USB2422 24-Pin SQFN

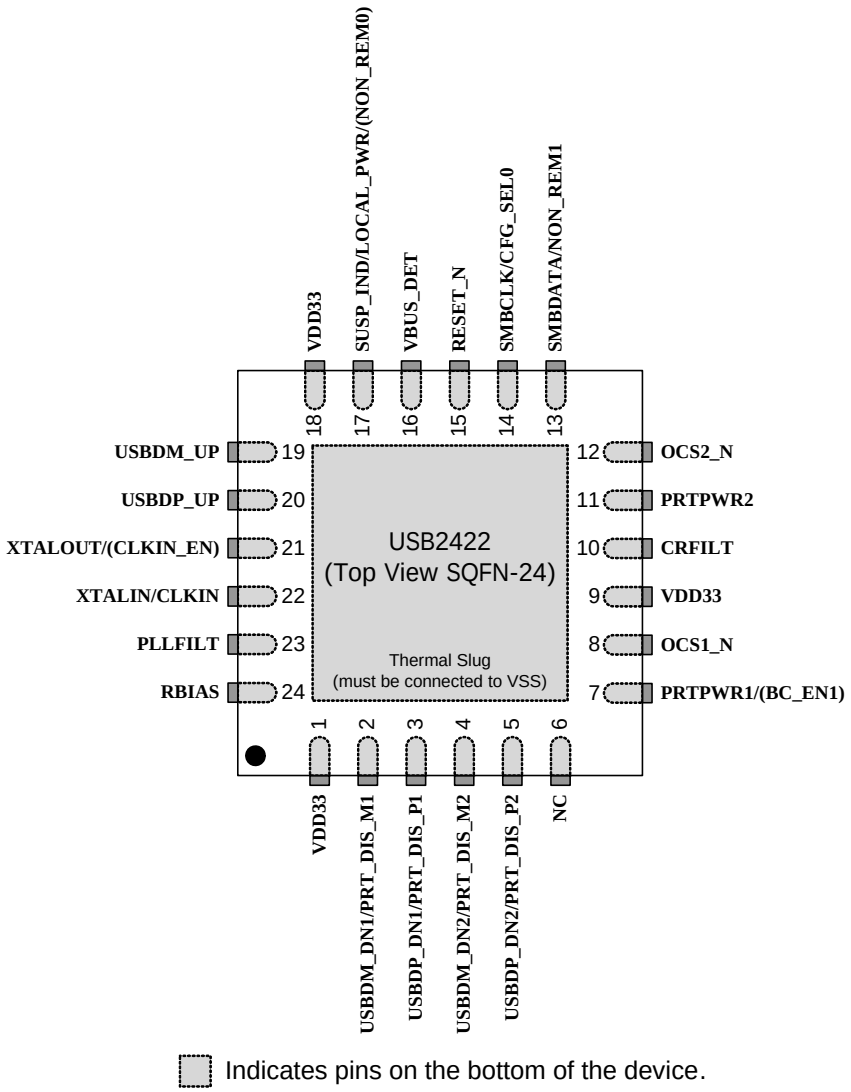

© 2013 - 2015 Microchip Technology Inc.

2.2 Pin Table

TABLE 2-1: USB2422 PIN TABLE

UPSTREAM USB 2.0 INTERFACES (3 PINS)			
USBDM_UP	usbDM_UP	VBUS_DET	
DOWNSTREAM 2-PORT USB 2.0 INTERFACES (9 PINS)			
USBDP_DN1/ PRT_DIS_P1	USBDM_DN1/ PRT_DIS_M1	USBDP_DN2/ PRT_DIS_P2	USBDM_DN2/ PRT_DIS_M2
PRTPWR1/ BC_EN1	PRTPWR2	OCS1_N	OCS2_N
RBIAS			
SERIAL PORT INTERFACE (2 PINS)			
SMBDATA/ NON_REM1	SMBCLK/ CFG_SEL		
MISC (5 PINS)			
XTALIN/ CLKIN	XTALOUT/ CLKIN_EN	RESET_N	SUSP_IND/ LOCAL_PWR/ NON_REM0
NC			
POWER, GROUND, AND NO CONNECTS (5 PINS)			
(3) VDD33	CRFILT	PLLFILT	VSS
TOTAL 24			

2.3 Pin Descriptions (Grouped by Function)

TABLE 2-2: USB2422 PIN DESCRIPTIONS

Pin #	Symbol	Buffer Type	Description
UPSTREAM USB 2.0 INTERFACES			
19 20	USBDM_UP USBDP_UP	IO-U	USB Bus Data: Connect to the upstream USB bus data signals (host, port, or upstream hub).
16	VBUS_DET	I	Detect Upstream VBUS Power: Detects the state of upstream VBUS power. The hub monitors **VBUS_DET** to determine when to assert the internal D+ pull-up resistor (signalling a connect event) When designing a detachable hub, this pin should be connected to VBUS on the upstream port via a 2:1 voltage divider. Two 100 kΩ resistors are suggested. For self-powered applications with a permanently attached host, this pin must be connected to a dedicated host control output, or connected to the 3.3 V domain that powers the host (typically **VDD33**).

TABLE 2-2: USB2422 PIN DESCRIPTIONS (CONTINUED)

Pin #	Symbol	Buffer Type	Description
DOWNSTREAM USB 2.0 INTERFACES			
5 3 and 4 2	USBDP_DN[2:1]/ PRT_DIS_P[2:1] and USBDN_DN[2:1]/ PRT_DIS_M[2:1]	IO-U	Hi-Speed USB Data: Connect to the downstream USB peripheral devices attached to the hub's ports.
			Port Disable Strap Option: If this strap is enabled by package and configuration settings (see Table 4-1, "Hub Configuration Options"), this pin will be sampled at **RESET_N** negation to determine if the port is disabled. Both USB data pins for the corresponding port must be tied to **VDD33** to disable the associated downstream port.
7	PRTPWR1/	O12	USB Power Enable: Enables power to USB peripheral devices that are downstream, where the hub supports active high power controllers only.
	BC_EN1	IPD	Battery Charging Strap Option: Port 1 pin will be sampled at **RESET_N** negation to determine if port 1 supports the battery charging protocol (and thus the supporting external port power controllers) that would enable a device to draw the currents per the *USB Battery Charging Specification*. This pin has an internal pull-down that will be removed after the strap option hold time is completed. BC_EN1= 1: Battery charging feature is supported for port 1 BC_EN1= 0: Battery charging feature is not supported for port 1
11	PRTPWR2	O12	USB Power Enable: Enables power to USB peripheral devices that are downstream, where the hub supports active high power controllers only.
8 12	OCS1_N OCS2_N	IPU	Over-Current Sense: Input from external current monitor indicating an over-current condition. This pin contains an internal pull-up to the 3.3 V supply.
24	RBIAS	I-R	USB Transceiver Bias: A12.0 kΩ (+/- 1%) resistor is attached from ground to this pin to set the transceiver's internal bias settings.
SERIAL PORT INTERFACE			
13	SMBDATA	I/OSD12	System Management Bus Data
	NON_REM1		Non-removable Port Strap Option: This pin is sampled (in conjunction with **SUSP_IND/NON_REM0**) at **RESET_N** negation to determine if ports [2:1] contain permanently attached (non-removable) devices: NON_REM[1:0] = `00`: all ports are removable NON_REM[1:0] = `01`: port 1 is non-removable NON_REM[1:0] = `10`: ports 1 and 2 are non-removable NON_REM[1:0] = `11`: reserved See Section 2.5, "Strap Pin Configuration" for details.
14	SMBCLK/	I/OSD12	System Management Bus Clock
	CFG_SEL		Configuration Select: The logic state of this multifunction pin is internally latched on the rising edge of **RESET_N** (**RESET_N** negation), and will determine the hub configuration method as described in Table 4-1.

© 2013 - 2015 Microchip Technology Inc.

TABLE 2-2: USB2422 PIN DESCRIPTIONS (CONTINUED)

Pin #	Symbol	Buffer Type	Description
			MISC
22	XTALIN/ CLKIN	ICLKx	24 MHz Crystal or External Clock Input: This pin connects to either one terminal of the crystal or to an external 24 MHz clock when a crystal is not used.
21	XTALOUT	OCLKx	Crystal Output: This is the other terminal of the crystal circuit with 1.2 V p-p output and a weak (< 1 mA) driving strength. When an external clock source is used to drive **XTALIN/CLKIN**, leave this pin unconnected, or use with appropriate caution.
15	RESET_N	IS	RESET Input: The system must reset the chip by driving this input low. The minimum active low pulse is 1 µs.
6	NC	IPD	Treat as a no connect pin or connect to ground. No trace or signal should be routed or attached to this pin.
17	SUSP_IND	I/O12	Suspend Indicator: Indicates the USB state of the hub. negated : unconfigured, or configured and in USB Suspend asserted : Hub is configured, and is active (i.e., not in suspend)
	LOCAL_PWR		Local Power: This input selects whether the hub reports itself as bus or self-powered when dynamic power switching is enabled via the Dynamic Power Enable (DYNAMIC) bit of the Configuration Data Byte 2 Register (CFG2). This pin is sampled at POR/Reset before the USB Hub Attach command is sent. Once the hub has entered the attach state (as indicated by the USB Attach and Write Protect (USB_ATTACH) bit of the Status/Command Register (STCD)), this pin cannot be changed. Low : self/local power source is not available (i.e., the Hub gets all power from the upstream USB VBus). High : self/local power source is available. **Note:** Never tie this pin directly to **VDD33**, as doing so may cause it to act as **SUSP_IND**. **Note:** This pin assumes the meaning of local power input only if properly configured via SMBus. If the hub is configured via straps, it is NON_REM0 at reset and SUSP_IND after reset.
	(NON_REM0)		Non-Removable Port Strap Option: This pin is sampled (in conjunction with **SUSP_IND/NON_REM0**) at **RESET_N** negation to determine if ports [2:1] contain permanently attached (non-removable) devices: NON_REM[1:0] = `00`: all ports are removable NON_REM[1:0] = `01`: port 1 is non-removable NON_REM[1:0] = `10`: ports 1 and 2 are non-removable NON_REM[1:0] = `11`: reserved See Section 2.5, "Strap Pin Configuration" for details.

TABLE 2-2: USB2422 PIN DESCRIPTIONS (CONTINUED)

Pin #	Symbol	Buffer Type	Description
POWER, GROUND, and NO CONNECTS			
1 9 18	VDD33		3.3 V power to the chip. A 1.0 µF low-ESR capacitor to VSS is required on pin 9 as close as possible to the pin. A 0.1 µF low-ESR capacitor to VSS is required on pin 1 as close as possible to the pin.
10	CRFILT		VDD Core Regulator Filter Capacitor: This pin requires a 1.0 µF low-ESR capacitor to VSS for proper operation.
23	PLLFILT		PLL Regulator Filter Capacitor: This pin can have up to a 0.1 µF low-ESR capacitor to VSS, or be left unconnected.
	VSS		Ground Pad/ePad: The package slug is the only VSS for the device and must be tied to ground with multiple vias.

2.4 Buffer Type Descriptions

TABLE 2-3: BUFFER TYPE DESCRIPTIONS

Buffer	Description
I/O	Input/Output
IPD	Input with internal weak pull-down resistor
IPU	Input with internal weak pull-up resistor
IS	Input with Schmitt trigger
I/O12	Input/Output buffer with 12 mA sink and 12 mA source
ICLKx	XTAL clock input
OCLKx	XTAL clock output
I-R	RBIAS
I/O-U	Analog Input/Output defined in USB specification

2.5 Strap Pin Configuration

If a pin's strap function is enabled through hub configuration selection (Table 4-1), the strap pins must be pulled either high or low using the values provided in Table 2-4. Each strap option is dependent on the pin's buffer type, as outlined in the sections that follow.

TABLE 2-4: STRAP OPTION SUMMARY

Strap Option	Resistor Value	Buffer Type	Notes
Non-Removable	47 - 100 kΩ	I/O	
Internal Pull-Down (IPD)	10 kΩ	IPD	• Only applicable to port power pins • Contains a built-in resistor
LED	47 - 100 kΩ	I/O	

© 2013 - 2015 Microchip Technology Inc.

2.5.1 NON-REMOVABLE

If a strap pin's buffer type is I/O, an external pull-up or pull-down must be implemented as shown in Figure 2-2. Use Strap High to set the strap option to 1 and Strap Low to set the strap option to 0. When implementing the Strap Low option, no additional components are needed (i.e., the internal pull-down provides the resistor).

FIGURE 2-2: NON-REMOVABLE PIN STRAP EXAMPLE

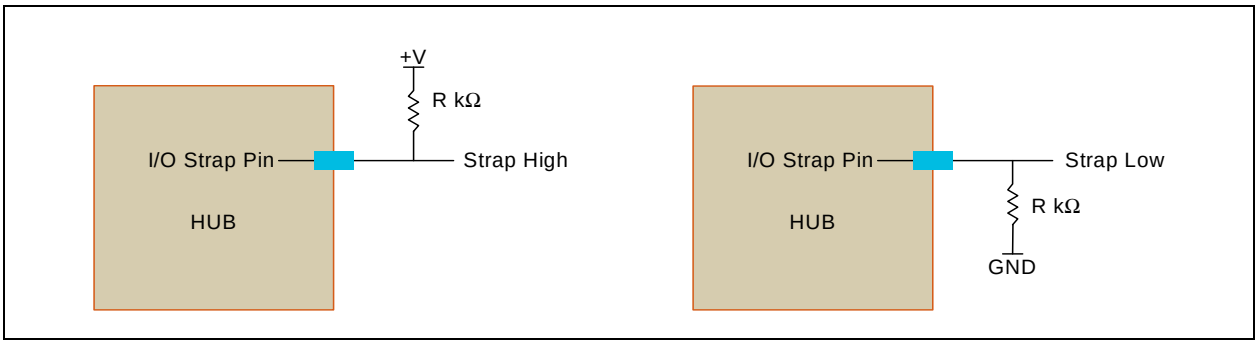

2.5.2 INTERNAL PULL-DOWN (IPD)

If a strap pin's buffer type is IPD, one of the two hardware configurations outlined in Figure 2-3 must be implemented. Use the Strap High configuration to set the strap option value to 1 and Strap Low to set the strap option value to 0.

FIGURE 2-3: IPD PIN STRAP EXAMPLE

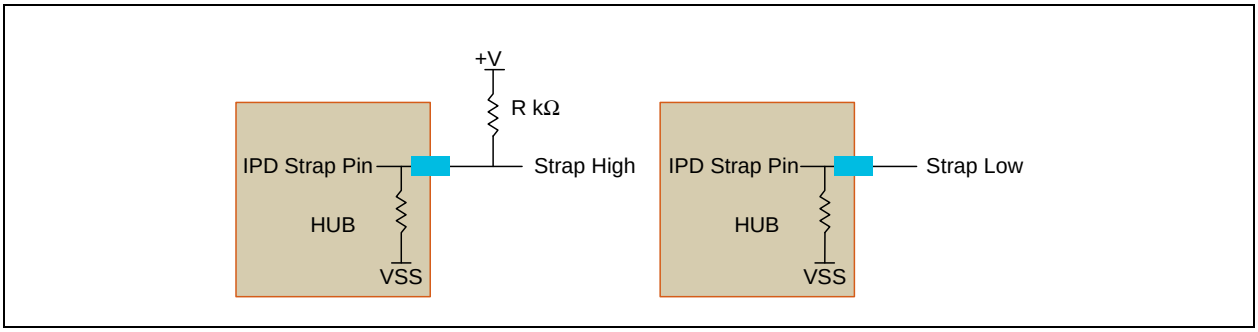

2.5.3 LED

If a strap pin's buffer type is I/O and shares functionality with an LED, the hardware configuration outlined below must be implemented. The internal logic will drive the LED appropriately (active high or low) depending on the sampled strap option. Use the Strap High configuration to set the strap option value to 1 and Strap Low to set the strap option to 0.

FIGURE 2-4: LED PIN STRAP EXAMPLE

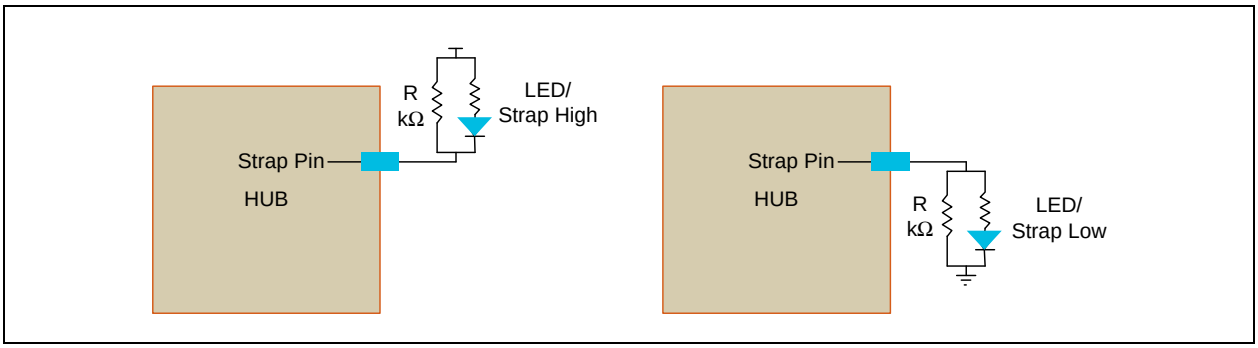

2.6 Example Applications

Figure 2-5 and Figure 2-6 depict example applications for an SoC based design and a non-SoC based design, respectively. The corresponding resistor and capacitor values for these examples are provided in Table 2-5.

FIGURE 2-5: EXAMPLE APPLICATION - SOC BASED DESIGN

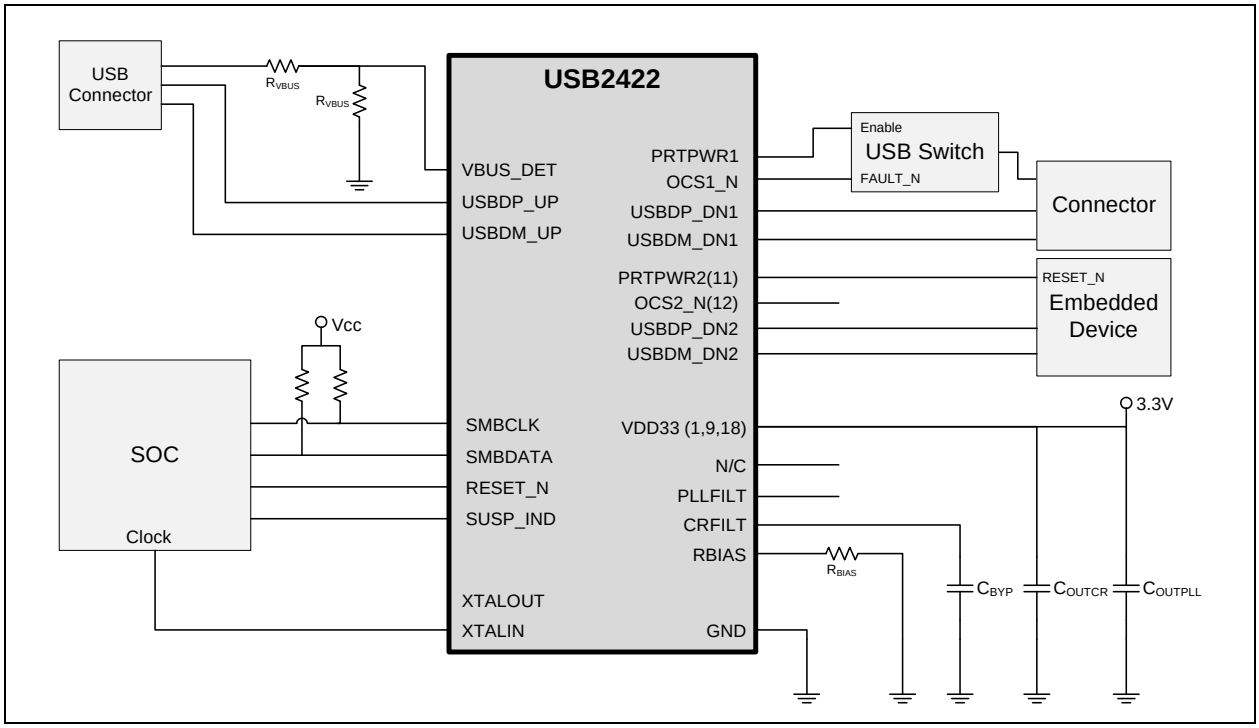

FIGURE 2-6: EXAMPLE APPLICATION - NON-SOC BASED DESIGN

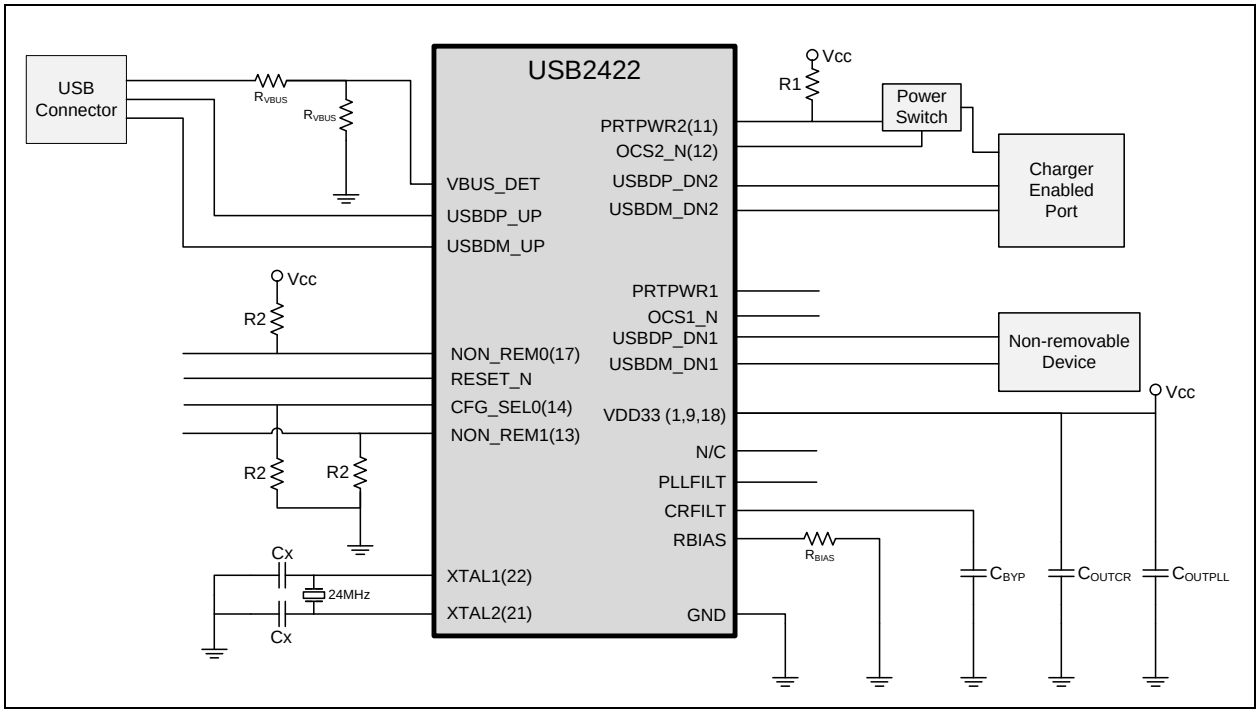

© 2013 - 2015 Microchip Technology Inc.

TABLE 2-5: EXAMPLE APPLICATIONS - RESISTOR/CAPACITOR VALUES

Designator	Value
R1	20 kΩ
R2	50 kΩ
Cx	18 pF
C_{BYP}	1.0 uF
C_{OUTCR}	1.0 uF (Note 2-1)
C_{OUTPLL}	0.1 uF (Note 2-2)
R_{BIAS}	12 kΩ
R_{VBUS}	100 kΩ

Note 2-1 C_{OUTCR} should be placed as close as possible to pin 9

Note 2-2 C_{OUTPLL} should be placed as close as possible to pin 1

3.0 BATTERY CHARGING SUPPORT

The USB2422 hub provides support for battery charging devices on a per port basis in compliance with the *USB Battery Charging Specification, Revision 1.1*. The hub can be configured to individually enable each downstream port for battery charging support either via pin strapping (Port 1 only) as illustrated in Figure 3-1 or by setting the corresponding configuration bits via SMBus (Section 4.1 on page 16).

FIGURE 3-1: BATTERY CHARGING VIA EXTERNAL POWER SUPPLY

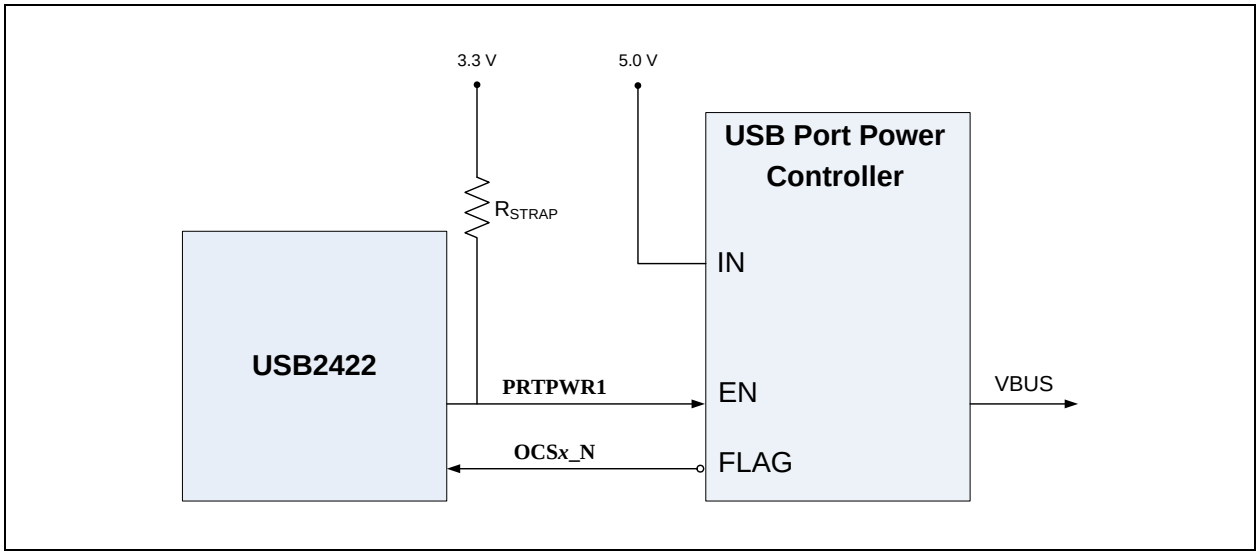

Note: R_{STRAP} enables battery charging.

3.1 USB Battery Charging

A downstream port enabled for battery charging turns on port power as soon as the power on reset and hardware configuration process has completed. The hub does not need to be enumerated nor does **VBUS_DET** need to be asserted for the port power to be enabled. These conditions allow battery charging in S3, S4, and S5 system power states as well as in the fully operational state. The *USB Battery Charging Specification* does not interfere with standard USB operation, which allows a device to perform battery charging at any time.

A port that supports battery charging must be able to support 1.5 amps of current on VBUS. Standard USB port power controllers typically only allow for 0.8 amps of current before detecting an over-current condition. Therefore, the 5 volt power supply, port power controller, or over-current protection devices must be chosen to handle the larger current demand compared to standard USB hub designs.

3.1.1 SPECIAL BEHAVIOR OF PRTPWR PINS

The USB2422 enables VBUS by asserting the port power (**PRTPWR[2:1]**) as soon as the hardware configuration process has completed. If the port detects an over-current condition, **PRTPWR[2:1]** will be turned off to protect the circuitry from overloading. If an over-current condition is detected when the hub is not enumerated, **PRTPWR[2:1]** can only be turned on from the host or if **RESET_N** is toggled. These behaviors provide battery charging even when the hub is not enumerated and protect the hub from sustained short circuit conditions. If the short circuit condition persists when the hub is plugged into a host system the user is notified that a port has an over-current condition. Otherwise **PRTPWR[2:1]** turned on by the host system and the ports operate normally.

© 2013 - 2015 Microchip Technology Inc.

3.2 Battery Charging Configuration

The battery charging option can be configured in one of two ways:

- When the hub is brought up in the default configuration with strapping options enabled, with the **PRTP-WR1/BC_EN1** pin configured (Port 1 only). See the following sections for details:
  - Section 2.3, "Pin Descriptions (Grouped by Function)," on page 7
  - Section 2.5, "Strap Pin Configuration," on page 10
- When the hub is initialized for configuration over SMBus.

3.2.1 BATTERY CHARGING ENABLED VIA SMBUS

Register memory map location 0xD0 is allocated for battery charging support. The Battery Charging register at location 0xD0 starting from bit 1 enables battery charging for each downstream port when asserted. Bit 1 represents port 1, and bit 2 represents port 2. Each port that has battery charging enabled asserts the corresponding **PRTPWR[2:1]** pin.

4.0 CONFIGURATION OPTIONS

Microchip's USB 2.0 hub is fully compliant with the *USB Specification* [1]. Refer to Chapter 10 (Hub Specification) for general details regarding hub operation and functionality.

The hub provides one Transaction Translator (TT) that is shared by both downstream ports (defined as Single-TT configuration). The TT contains 4 non-periodic buffers.

4.1 Hub Configuration

The USB2422 only supports internal defaults with the exception of the non-removable strap option (using **NON_REM[1:0]**). The hub internal default settings are as follows:

- Internal Default Configuration without over-rides
- Strap options enabled
- Self-powered operation enabled
- Individual power switching
- Individual over-current sensing

TABLE 4-1: HUB CONFIGURATION OPTIONS

CFG_SEL	Description
0	Default configuration: • Strap options enabled • Hub descriptors indicate the hub as "self-powered"
1	The hub is configured externally over SMBus (as an SMBus slave device with address 0101100b): • Strap options disabled • Self-powered or bus-powered depending on register settings • All registers configured over SMBus

4.2 Resets

There are two device resets: a hardware reset via **RESET_N**, and a USB Bus Reset.

4.2.1 EXTERNAL HARDWARE RESET_N

A valid hardware reset is defined as assertion of **RESET_N** for a minimum of 1 µs after all power supplies are within operating range. While reset is asserted, the hub (and its associated external circuitry) consumes less than 500 µA of current from the upstream USB power source.

Assertion of **RESET_N** causes the following:

1. All downstream ports are disabled.
2. The **PRTPWR** power to downstream devices is turned on when battery charging is enabled for a specific port, and removed when battery charging is disabled for a specific port.
3. The PHYs are disabled, and the differential pairs will be in a high-impedance state.
4. All transactions immediately terminate; no states are saved.
5. All internal registers return to the default state (in most cases, 00h).
6. The external crystal oscillator is halted.
7. The PLL is halted.

© 2013 - 2015 Microchip Technology Inc.

4.2.1.1 Hub Configuration Timing for Strapping Option

FIGURE 4-1: HUB CONFIGURATION TIMING

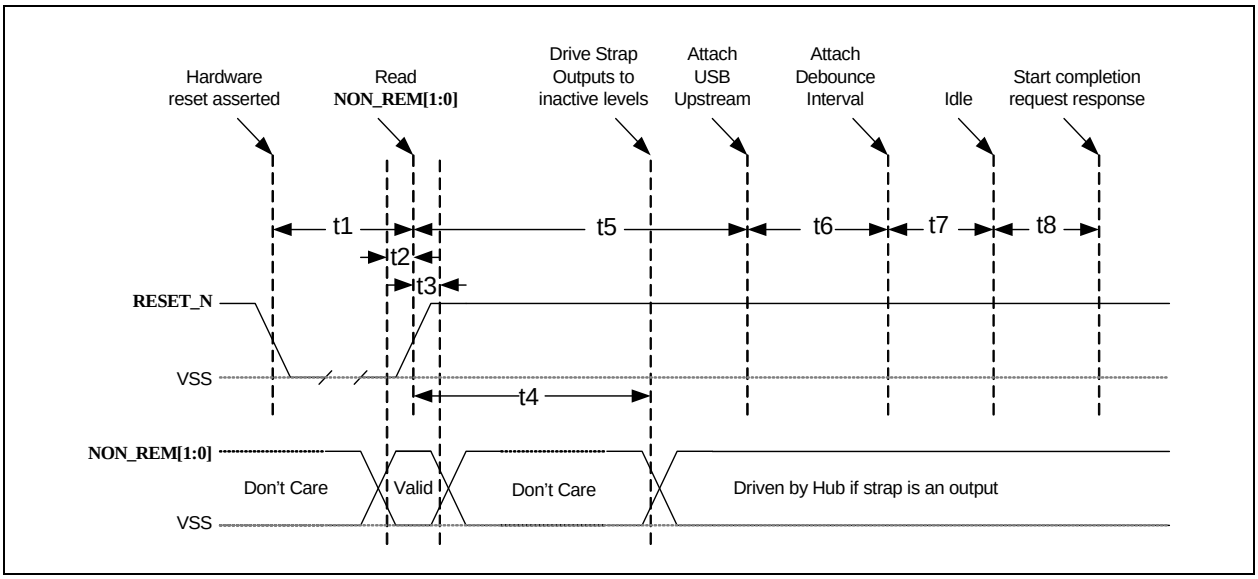

TABLE 4-2: HUB CONFIGURATION TIMING

Name	Description	MIN	TYP	MAX	Units
t1	**RESET_N** asserted	1			µsec
t2	Strap setup time	16.7			nsec
t3	Strap hold time	16.7		1400	nsec
t4	Hub outputs driven to inactive logic states		1.5	2	µsec
t5	USB attach (See Note)		3		µsec
t6	Host acknowledges attach and signals USB reset	100			msec
t7	USB idle		undefined		msec
t8	Completion time for requests (with or without data stage)			5	msec

Note: All power supplies must have reached the operating levels mandated in Section 5.0, "DC Parameters", prior to (or coincident with) the assertion of **RESET_N**.

4.2.2 USB BUS RESET

In response to the upstream port signaling a reset to the hub, the hub does the following:

1. Sets default address to 0.
2. Sets configuration to unconfigured.
3. The **PRTPWR** power to downstream devices is turned on when battery charging is enabled for a specific port, and removed when battery charging is disabled for a specific port.
4. Clears all TT buffers.
5. Moves device from suspended to active (if suspended).
6. Complies with Section 11.10 of the *USB 2.0 Specification* for behavior after completion of the reset sequence. The host then configures the hub and the hub's downstream port devices in accordance with the specification.

The hub does not propagate the upstream USB reset to downstream devices.

4.3 SMBus

The Microchip hub can be configured by an external processor via an SMBus interface (see Table 4-1 for details on enabling the SMBus interface). The Microchip hub waits indefinitely for the SMBus code load to complete and only appears as a newly connected device on USB after the code load is complete.

The hub's SMBus acts as a slave-only SMBus device. The implementation only supports block write (Section 4.3.2.1) and block read (Section 4.3.2.2) protocols. Reference the *System Management Bus Specification* [2] for additional information.

Refer to Section 4.4, "SMBus Registers," on page 20 for details on all SMBus accessible registers.

4.3.1 SMBUS SLAVE ADDRESS

The 7-bit slave address is 0101100b. The hub will not respond to the general call address of 0000000b.

4.3.2 PROTOCOL IMPLEMENTATION

Typical block write and block read protocols are shown in figures 4-2 and 4-3. Register accesses are performed using 7-bit slave addressing, an 8-bit register address field, and an 8-bit data field. The shading shown in the figures during a read or write indicates the hub is driving data on the **SMBDATA** line; otherwise, host data is on the **SMBDATA** line.

The SMBus slave address assigned to the hub (0101100b) allows it to be identified on the SMBus. The register address field is the internal address of the register to be accessed. The register data field is the data that the host is attempting to write to the register or the contents of the register that the host is attempting to read.

Note: Data bytes are transferred MSB first.

4.3.2.1 Block Write/Read

The block write begins with a slave address and a write condition. After the command code, the host issues a byte count which describes how many more bytes will follow in the message. If a slave had 20 bytes to send, the first byte would be the number 20 (14h), followed by the 20 bytes of data. The byte count may not be zero. A block write or read allows a transfer maximum of 32 data bytes.

Note: For the following SMBus tables:

Denotes Master-to-Slave Denotes Slave-to-Master

FIGURE 4-2: BLOCK WRITE

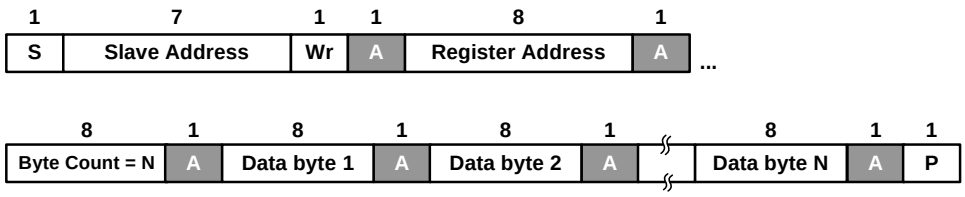

© 2013 - 2015 Microchip Technology Inc.

4.3.2.2 Block Read

A block read differs from a block write in that the repeated start condition exists to satisfy the SMBus specification's requirement for a change in the transfer direction.

FIGURE 4-3: BLOCK READ

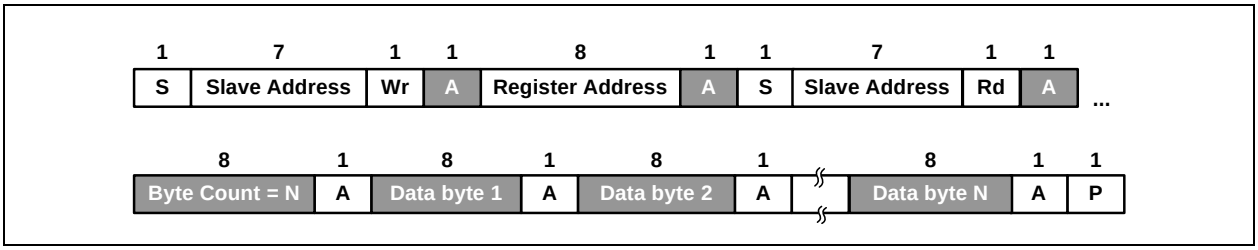

4.3.2.3 Invalid Protocol Response Behavior

Note that any attempt to update registers with an invalid protocol will not be updated. The only valid protocols are write block and read block (described above), where the hub only responds to the 7-bit hardware selected slave address (0101100b).

4.3.3 SLAVE DEVICE TIMEOUT

Devices in a transfer can abort the transfer in progress and release the bus when any single clock low interval exceeds 25 ms ($T_{TIMEOUT, MIN}$). The master must detect this condition and generate a stop condition within or after the transfer of the interrupted data byte. Slave devices must reset their communication and be able to receive a new START condition no later than 35 ms ($T_{TIMEOUT, MAX}$).

Note:	Some simple devices do not contain a clock low drive circuit; this simple kind of device typically resets its communications port after a start or stop condition. The slave device timeout must be implemented.

4.3.4 STRETCHING THE SCLK SIGNAL

The hub supports stretching of the **SCLK** by other devices on the SMBus. However, the hub does not stretch the **SCLK**.

4.3.5 SMBUS TIMING

The SMBus slave interface complies with the *SMBus Specification Revision 1.0* 2.. See Section 2.1, *AC Specifications* on page 3 for more information.

4.3.6 BUS RESET SEQUENCE

The SMBus slave interface resets and returns to the idle state upon a START condition followed immediately by a STOP condition.

4.3.7 SMBUS ALERT RESPONSE ADDRESS

The SMBALERT# signal is not supported by the hub.

4.4 SMBus Registers

This section details the device SMBus registers.

Note: Internal Default ROM values are not visible to THE SMBus interface and cannot be read. When the hub is configured for SMBus register load, the entire register set must be written.

TABLE 4-3: INTERNAL DEFAULT AND SMBUS REGISTER MEMORY MAP

Reg. Address	Type	Register Name	Internal Default ROM	SMBus & EEPROM Default
00h	R/W	Vendor ID Least Significant Bit Register (VIDL)	24h	00h
01h	R/W	Vendor ID Most Significant Bit Register (VIDM)	04h	00h
02h	R/W	Product ID Least Significant Bit Register (PIDL)	22h	00h
03h	R/W	Product ID Most Significant Bit Register (PIDM)	24h	00h
04h	R/W	Device ID Least Significant Bit Register (DIDL)	A0h	00h
05h	R/W	Device ID Most Significant Bit Register (DIDM)	00h	00h
06h	R/W	Configuration Data Byte 1 Register (CFG1)	8Bh	00h
07h	R/W	Configuration Data Byte 2 Register (CFG2)	20h	00h
08h	R/W	Configuration Data Byte 3 Register (CFG3)	02h	00h
09h	R/W	Non-Removable Device Register (NRD)	00h	00h
0Ah	R/W	Port Disable for Self-Powered Operation Register (PDS)	00h	00h
0Bh	R/W	Port Disable for Bus-Powered Operation Register (PDB)	00h	00h
0Ch	R/W	Max Power for Self-Powered Operation Register (MAXPS)	01h	00h
0Dh	R/W	Max Power for Bus-Powered Operation Register (MAXPB)	32h	00h
0Eh	R/W	Hub Controller Max Current for Self-Powered Operation Register (HCMCS)	01h	00h
0Fh	R/W	Hub Controller Max Power for Bus-Powered Operation Register (HCMCB)	32h	00h
10h	R/W	Power-On Time Register (PWRT)	32h	00h
11h	R/W	Language ID High Register (LANGIDH)	00h	00h
12h	R/W	Language ID Low Register (LANGIDL)	00h	00h
13h	R/W	Manufacturer String Length Register (MFRSL)	00h	00h
14h	R/W	Product String Length Register (PRDSL)	00h	00h
15h	R/W	Serial String Length Register (SERSL)	00h	00h
16h-53h	R/W	Manufacturer String Registers (MANSTR)	00h	00h
54h-91h	R/W	Product String Registers (PRDSTR)	00h	00h
92h-CFh	R/W	Serial String Registers (SERSTR)	00h	00h
D0h	R/W	Battery Charging Enable Register (BC_EN)	00h	00h
E0h-F5h	-	RESERVED	-	-
F6h	R/W	Boost Upstream Register (BOOSTUP)	00h	00h
F7h	-	RESERVED	-	-
F8h	R/W	Boost Downstream Register (BOOST40)	00h	00h
F9h	-	RESERVED	-	-
FAh	R/W	Port Swap Register (PRTSP)	00h	00h
FBh	R/W	Port 1/2 Remap Register (PRTR12)	00h	00h
FCh-FEh	-	RESERVED	-	-
FFh	R/W	Status/Command Register (STCD)	00h	00h

© 2013 - 2015 Microchip Technology Inc.

4.4.1 VENDOR ID LEAST SIGNIFICANT BIT REGISTER (VIDL)

Offset: 00h Size: 8 bits

Bits	Description	Type	Default
7:0	**Least Significant Byte of the Vendor ID (VID_LSB)** This is a 16-bit value that uniquely identifies the Vendor of the user device (assigned by USB-Interface Forum). This field is set by the OEM using the SMBus interface option.	R/W	00h

4.4.2 VENDOR ID MOST SIGNIFICANT BIT REGISTER (VIDM)

Address: 01h Size: 8 bits

Bits	Description	Type	Default
7:0	**Most Significant Byte of the Vendor ID (VID_LSB)** This is a 16-bit value that uniquely identifies the Vendor of the user device (assigned by USB-Interface Forum). This field is set by the OEM using the SMBus interface options.	R/W	00h

4.4.3 PRODUCT ID LEAST SIGNIFICANT BIT REGISTER (PIDL)

Address: 02h Size: 8 bits

Bits	Description	Type	Default
7:0	**Least Significant Byte of the Product ID (PID_LSB)** This is a 16-bit value that the Vendor can assign that uniquely identifies this particular product (assigned by OEM). This field is set by the OEM using the SMBus interface options.	R/W	00h

4.4.4 PRODUCT ID MOST SIGNIFICANT BIT REGISTER (PIDM)

Address: 03h Size: 8 bits

Bits	Description	Type	Default
7:0	**Most Significant Byte of the Product ID (PID_LSB)** This is a 16-bit value that the Vendor can assign that uniquely identifies this particular product (assigned by OEM). This field is set by the OEM using either SMBus interface options.	R/W	00h

© 2013 - 2015 Microchip Technology Inc.

4.4.5 DEVICE ID LEAST SIGNIFICANT BIT REGISTER (DIDL)

Address: 04h Size: 8 bits

Bits	Description	Type	Default
7:0	**Least Significant Byte of the Device ID (DID_LSB)** This is a 16-bit device release number in BCD format (assigned by OEM). This field is set by the OEM using either the SMBus interface options.	R/W	00h

4.4.6 DEVICE ID MOST SIGNIFICANT BIT REGISTER (DIDM)

Address: 05h Size: 8 bits

Bits	Description	Type	Default
7:0	**Most Significant Byte of the Device ID (DID_LSB)** This is a 16-bit device release number in BCD format (assigned by OEM). This field is set by the OEM using the SMBus interface options.	R/W	00h

© 2013 - 2015 Microchip Technology Inc.

4.4.7 CONFIGURATION DATA BYTE 1 REGISTER (CFG1)

Address: 06h Size: 8 bits

Bits	Description	Type	Default
7	**Self or Bus Power (SELF_BUS_PWR)** Selects between Self- and Bus-Powered operation. The Hub is either Self-Powered (draws less than 2mA of upstream bus power) or Bus-Powered (limited to a 100mA maximum of upstream power prior to being configured by the host controller). When configured as a Bus-Powered device, the Hub consumes less than 100mA of current prior to being configured. After configuration, the Bus-Powered Hub (along with all associated hub circuitry, any embedded devices if part of a compound device, and 100mA per externally available downstream port) must consume no more than 500mA of upstream VBUS current. The current consumption is system dependent, and the OEM must ensure that the USB2.0 specifications are not violated. When configured as a Self-Powered device, <1mA of upstream VBUS current is consumed and all ports are available, with each port being capable of sourcing 500mA of current. This field is set by the OEM using the SMBus interface option. Please see the description under Dynamic Power for the self/bus power functionality when dynamic power switching is enabled. 0 = Bus-Powered operation 1 = Self-Powered operation **Note:** If Dynamic Power Switching is enabled, this bit is ignored and the LOCAL_PWR pin is used to determine if the hub is operating from self or bus power.	R/W	0b
6	**RESERVED**	-	-
5	**High Speed Disable (HS_DISABLE)** Disables the capability to attach as either a High/Full- speed device, and forces attachment as Full-speed only i.e. (no High-Speed support). 0 = High-/Full-Speed 1 = Full-Speed-Only (High-Speed disabled)	R/W	0b
4	**Multi-TT Enable (MTT_ENABLE)** Enables one transaction translator per port operation. Selects between a mode where only one transaction translator is available for all ports (Single-TT), or each port gets a dedicated transaction translator (Multi-TT) **Note:** The host may force Single-TT mode only 0 = Single TT for all ports. Default to STT if MTT still exists 1 = One TT per port (multiple TT's supported)	R/W	0b

Bits	Description	Type	Default
3	**EOP Disable (EOP_DISABLE)** Disables EOP generation of EOF1 when in Full-Speed mode. During FS operation only, this permits the Hub to send EOP if no downstream traffic is detected at EOF1. See Section 11.3.1 of the USB 2.0 Specification for additional details. **Note:** generation of an EOP at the EOF1 point may prevent a Host controller (operating in FS mode) from placing the USB bus in suspend. 0 = An EOP is generated at the EOF1 point if no traffic is detected 1 = EOP generation at EOF1 is disabled (Note: This is normal USB operation) **Note:** This is a rarely used feature in the PC environment. It is included because it is a permitted feature in Chapter 11 of the USB specification.	R/W	0b
2:1	**Over Current Sense (CURRENT_SNS)** Selects current sensing on a port-by-port basis, all ports ganged, or none (only for bus-powered hubs) The ability to support current sensing on a port or ganged basis is hardware implementation dependent. 00 = Ganged sensing (all ports together) 01 = Individual port-by-port 1x = Over current sensing not supported (Must only be used with Bus-Powered configurations)	R/W	00b
0	**Port Power Switching (PORT_PWR)** Enables power switching on all ports simultaneously (ganged), or port power is individually switched on and off on a port- by-port basis (individual). The ability to support power enabling on a port or ganged basis is hardware implementation dependent. 0 = Ganged switching (all ports together) 1 = Individual port-by-port switching	R/W	0b

© 2013 - 2015 Microchip Technology Inc.

4.4.8 CONFIGURATION DATA BYTE 2 REGISTER (CFG2)

Address: 07h Size: 8 bits

Bits	Description	Type	Default
7	**Dynamic Power Enable (DYNAMIC)** Controls the ability of the Hub to automatically change from Self-Powered operation to Bus- Powered operation if the local power source is removed or is unavailable (and from Bus-Powered to Self-Powered if the local power source is restored). **Note:** If the local power source is available, the Hub will always switch to Self-Powered operation. When Dynamic Power switching is enabled, the Hub detects the availability of a local power source by monitoring the external LOCAL_PWR pin. If the Hub detects a change in power source availability, the Hub immediately disconnects and removes power from all downstream devices and disconnects the upstream port. The Hub will then re-attach to the upstream port as either a Bus-Powered Hub (if local-power is unavailable) or a Self-Powered Hub (if local power is available). 0 = No Dynamic auto-switching (pin becomes SUSP_IND) and the hub controller will utilize the inverse of the SELF_BUS_PWR bit for 'Hub_Status_Field' bit '0' (local power source) 1 = Dynamic Auto-switching capable (pin becomes LOCAL_PWR) and the hub controller will utilize the LOCAL_PWR pin for 'Hub_Status_Field' bit '0' (local power source)	R/W	0b
6	**RESERVED**	-	-
5:4	**Over Current Timer Delay (OC_TIMER)** 00 = 0.1ms 01 = 4ms 10 = 8ms 11 = 16ms	R/W	00b
3	**Compound Device (COMPOUND)** Allows the OEM to indicate that the Hub is part of a compound (see the USB Specification for definition) device. The applicable port(s) must also be defined as having a “Non-Removable Device”. **Note:** When configured via strapping options, declaring a port as non-removable automatically causes the hub controller to report that it is part of a compound device. 0 = No 1 = Yes, Hub is part of a compound device	R/W	0b
2:0	**RESERVED**	-	-

4.4.9 CONFIGURATION DATA BYTE 3 REGISTER (CFG3)

Address: 08h Size: 8 bits

Bits	Description	Type	Default
7:4	**RESERVED**	-	-
3	**Port Remapping Enable (PRTMAP_EN)** Selects the method used by the hub to assign port numbers and disable ports 0 = Standard Mode Strap options or the following registers are used to define which ports are enabled, and the ports are mapped as Port'n' on the hub is reported as Port'n' to the host, unless one of the ports is disabled, then the higher numbered ports are remapped in order to report contiguous port numbers to the host. Register 0Ah: Port Disable For Self Powered Operation (Reset = 0x00) Register 0Bh: Port Disable For Bus Powered Operation (Reset = 0x00). 1 = Port Re-Map mode The mode enables remapping via Register FBh: Port Remap 12	R/W	0b
2:1	**RESERVED**	-	-
0	**String Enable (STRING_EN)** Enables string descriptor support. 0 = String support disabled 1 = String support enabled	R/W	0b

4.4.10 NON-REMOVABLE DEVICE REGISTER (NRD)

Address: 09h Size: 8 bits

Bits	Description	Type	Default
7:0	**Non-Removable Device (NR_DEVICE)** Indicates which port(s) include non- removable devices. 0 = port is removable 1 = port is non- removable Informs the Host if one of the active physical ports has a permanent device that is undetachable from the Hub. **Note:** The device must provide its own descriptor data. When using the internal default option, the NON_REM[1:0] pins will designate the appropriate ports as being non- removable. Bit 7= Reserved Bit 6= Reserved Bit 5= Reserved Bit 4= Reserved Bit 3= Reserved Bit 2= Port 2 non-removable Bit 1= Port 1 non removable Bit 0= Reserved	R/W	00h

© 2013 - 2015 Microchip Technology Inc.

4.4.11 PORT DISABLE FOR SELF-POWERED OPERATION REGISTER (PDS)

Address: 0Ah Size: 8 bits

Bits	Description	Type	Default
7:0	**Port Disable Self-Powered (PORT_DIS_SP)** Disables 1 or more ports. 0 = port is available 1 = port is disabled During Self-Powered operation, when PRTMAP_EN = '0', this selects the ports which will be permanently disabled, and are not available to be enabled or enumerated by a Host Controller. The ports can be disabled in any order, the internal logic will automatically report the correct number of enabled ports to the USB Host, and will reorder the active ports in order to ensure proper function. When using the internal default option, the PRT_DIS[1:0] pins will disable the appropriate ports. Bit 7= Reserved Bit 6= Reserved Bit 5= Reserved Bit 4= Reserved Bit 3= Reserved Bit 2= Port 2 Disable Bit 1= Port 1 Disable Bit 0= Reserved	R/W	00h

4.4.12 PORT DISABLE FOR BUS-POWERED OPERATION REGISTER (PDB)

Address: 0Bh Size: 8 bits

Bits	Description	Type	Default
7:0	**Port Disable Bus-Powered (PORT_DIS_BP)** Disables 1 or more ports. 0 = port is available 1 = port is disabled During Bus-Powered operation, when PRTMAP_EN = '0', this selects the ports which will be permanently disabled, and are not available to be enabled or enumerated by a Host Controller. The ports can be disabled in any order, the internal logic will automatically report the correct number of enabled ports to the USB Host, and will reorder the active ports in order to ensure proper function. When using the internal default option, the PRT_DIS[1:0] pins will disable the appropriate ports. Bit 7= Reserved Bit 6= Reserved Bit 5= Reserved Bit 4= Reserved Bit 3= Reserved Bit 2= Port 2 Disable Bit 1= Port 1 Disable Bit 0= Reserved	R/W	00h

4.4.13 MAX POWER FOR SELF-POWERED OPERATION REGISTER (MAXPS)

Address: 0Ch Size: 8 bits

Bits	Description	Type	Default
7:0	**Max Power Self-Powered (MAX_PWR_SP)** Value in 2mA increments that the Hub consumes from an upstream port (VBUS) when operating as a self-powered hub. This value includes the hub silicon along with the combined power consumption (from VBUS) of all associated circuitry on the board. This value also includes the power consumption of a permanently attached peripheral if the hub is configured as a compound device, and the embedded peripheral reports 0mA in its descriptors. **Note:** The USB2.0 Specification does not permit this value to exceed 100mA.	R/W	00h

4.4.14 MAX POWER FOR BUS-POWERED OPERATION REGISTER (MAXPB)

Address: 0Dh Size: 8 bits

Bits	Description	Type	Default
7:0	**Max Power Bus-Powered (MAX_PWR_BP)** Value in 2mA increments that the Hub consumes from an upstream port (VBUS) when operating as a self-powered hub. This value includes the hub silicon along with the combined power consumption (from VBUS) of all associated circuitry on the board. This value also includes the power consumption of a permanently attached peripheral if the hub is configured as a compound device, and the embedded peripheral reports 0mA in its descriptors.	R/W	00h

4.4.15 HUB CONTROLLER MAX CURRENT FOR SELF-POWERED OPERATION REGISTER (HCMCS)

Address: 0Eh Size: 8 bits

Bits	Description	Type	Default
7:0	**Hub Controller Max Current Self-Powered (HC_MAX_C_SP)** Value in 2mA increments that the Hub consumes from an upstream port (VBUS) when operating as a self- powered hub. This value includes the hub silicon along with the combined power consumption (from VBUS) of all associated circuitry on the board. This value does NOT include the power consumption of a permanently attached peripheral if the hub is configured as a compound device. **Note:** The USB2.0 Specification does not permit this value to exceed 100mA.	R/W	00h

© 2013 - 2015 Microchip Technology Inc.

4.4.16 HUB CONTROLLER MAX POWER FOR BUS-POWERED OPERATION REGISTER (HCMCB)

Address: 0Fh Size: 8 bits

Bits	Description	Type	Default
7:0	**Hub Controller Max Power Bus-Powered (MAX_PWR_BP)** Value in 2mA increments that the Hub consumes from an upstream port (VBUS) when operating as a bus- powered hub. This value will include the hub silicon along with the combined power consumption (from VBUS) of all associated circuitry on the board. This value will NOT include the power consumption of a permanently attached peripheral if the hub is configured as a compound device.	R/W	00h

4.4.17 POWER-ON TIME REGISTER (PWRT)

Address: 10h Size: 8 bits

Bits	Description	Type	Default
7:0	**Power-On Time (POWER_ON_TIME)** The length of time that is takes (in 2 ms intervals) from the time the host initiated power-on sequence begins on a port until power is good on that port. System software uses this value to determine how long to wait before accessing a powered-on port.	R/W	00h

4.4.18 LANGUAGE ID HIGH REGISTER (LANGIDH)

Address: 11h Size: 8 bits

Bits	Description	Type	Default
7:0	**USB Language ID High (LANG_ID_H)** Upper 8 bits of the 16-bit language ID field.	R/W	00h

4.4.19 LANGUAGE ID LOW REGISTER (LANGIDL)

Address: 12h Size: 8 bits

Bits	Description	Type	Default
7:0	**USB Language ID Low (LANG_ID_L)** Lower 8 bits of the 16-bit language ID field.	R/W	00h

4.4.20 MANUFACTURER STRING LENGTH REGISTER (MFRSL)

Address: 13h Size: 8 bits

Bits	Description	Type	Default
7:0	**Manufacturer String Length (MFR_STR_LEN)** Maximum string length is 31 characters.	R/W	00h

4.4.21 PRODUCT STRING LENGTH REGISTER (PRDSL)

Address: 14h Size: 8 bits

Bits	Description	Type	Default
7:0	**Product String Length (PRD_STR_LEN)** Maximum string length is 31 characters.	R/W	00h

4.4.22 SERIAL STRING LENGTH REGISTER (SERSL)

Address: 15h Size: 8 bits

Bits	Description	Type	Default
7:0	**Serial String Length (SER_STR_LEN)** Maximum string length is 31 characters.	R/W	00h

4.4.23 MANUFACTURER STRING REGISTERS (MANSTR)

Address: 16h-53h Size: 8 bits

Bits	Description	Type	Default
7:0	**Manufacturer String (MFR_STR)** UNICODE UTF-16LE per USB 2.0 Specification. Maximum string length is 31 characters (62 Bytes). **Note:** The String consists of individual 16 Bit UNICODE UTF-16LE characters. The Characters will be stored starting with the LSB at the least significant address and the MSB at the next 8-bit location (subsequent characters must be stored in sequential contiguous address in the same LSB, MSB manner).	R/W	00h

4.4.24 PRODUCT STRING REGISTERS (PRDSTR)

Address: 54h-91h Size: 8 bits

Bits	Description	Type	Default
7:0	**Product String (PRD_STR)** UNICODE UTF-16LE per USB 2.0 Specification. Maximum string length is 31 characters (62 Bytes). **Note:** The String consists of individual 16 Bit UNICODE UTF-16LE characters. The Characters will be stored starting with the LSB at the least significant address and the MSB at the next 8-bit location (subsequent characters must be stored in sequential contiguous address in the same LSB, MSB manner).	R/W	00h

© 2013 - 2015 Microchip Technology Inc.

4.4.25 SERIAL STRING REGISTERS (SERSTR)

Address: 92h-CFh Size: 8 bits

Bits	Description	Type	Default
7:0	**Serial String (SER_STR)** UNICODE UTF-16LE per USB 2.0 Specification. Maximum string length is 31 characters (62 Bytes). **Note:** The String consists of individual 16 Bit UNICODE UTF-16LE characters. The Characters will be stored starting with the LSB at the least significant address and the MSB at the next 8-bit location (subsequent characters must be stored in sequential contiguous address in the same LSB, MSB manner).	R/W	00h

4.4.26 BATTERY CHARGING ENABLE REGISTER (BC_EN)

Address: D0h Size: 8 bits

Bits	Description	Type	Default
7:0	**Battery Charging Enable (BC_EN)** Enables the battery charging feature for the corresponding port. 0 = Battery Charging support is not enabled 1 = Battery charging support is enabled Bit 7= Reserved Bit 6= Reserved Bit 5= Reserved Bit 4= Reserved Bit 3= Reserved Bit 2= Port 2 Battery Charging Enable Bit 1= Port 1 Battery Charging Enable Bit 0= Reserved	R/W	00h

4.4.27 BOOST UPSTREAM REGISTER (BOOSTUP)

Address: F6h Size: 8 bits

Bits	Description	Type	Default
7:2	**RESERVED**	-	-
1:0	**Boost Upstream (BOOST_IOUT_A)** USB electrical signaling drive strength Boost Bit for Upstream Port 'A'. 00 = Normal electrical drive strength 01 = Elevated electrical drive strength (+4% boost) 10 = Elevated electrical drive strength (+8% boost) 11 = Elevated electrical drive strength (+12% boost)	R/W	00b

4.4.28 BOOST DOWNSTREAM REGISTER (BOOST40)

Address: F8h Size: 8 bits

Bits	Description	Type	Default
7:4	**RESERVED**	-	-
3:2	**Boost Downstream Port 2 (BOOST_IOUT_2)** USB electrical signaling drive strength Boost Bit for Upstream Port '2'. 00 = Normal electrical drive strength 01 = Elevated electrical drive strength (+4% boost) 10 = Elevated electrical drive strength (+8% boost) 11 = Elevated electrical drive strength (+12% boost)	R/W	00b
1:0	**Boost Downstream Port 1 (BOOST_IOUT_1)** USB electrical signaling drive strength Boost Bit for Upstream Port '1'. 00 = Normal electrical drive strength 01 = Elevated electrical drive strength (+4% boost) 10 = Elevated electrical drive strength (+8% boost) 11 = Elevated electrical drive strength (+12% boost)	R/W	00b

4.4.29 PORT SWAP REGISTER (PRTSP)

Address: FAh Size: 8 bits

Bits	Description	Type	Default
7:0	**Port Swap (PRTSP)** Swaps the Upstream and Downstream USB DP and DM Pins for ease of board routing to devices and connectors. 0 = USB D+ functionality is associated with the DP pin and D- functionality is associated with the DM pin. 1 = USB D+ functionality is associated with the DM pin and D- functionality is associated with the DP pin Bit 7= Reserved Bit 6= Reserved Bit 5= Reserved Bit 4= Reserved Bit 3= Reserved Bit 2= Port 2 DP/DM Swap Bit 1= Port 1 DP/DM Swap Bit 0= Upstream Port DP/DM Swap	R/W	00h

© 2013 - 2015 Microchip Technology Inc.

4.4.30 PORT 1/2 REMAP REGISTER (PRTR12)

Address: FBh Size: 8 bits

<table>
<tr><th>Bits</th><th>Description</th><th>Type</th><th>Default</th></tr>
<tr><td>7:0</td><td>
Port 1/2 Remap (PRTR12)
When a hub is enumerated by a USB Host Controller, the hub is only permitted to report how many ports it has, the hub is not permitted to select a numerical range or assignment. The Host Controller will number the downstream ports of the hub starting with the number '1', up to the number of ports that the hub reported as having.

The host's port number is referred to as “Logical Port Number” and the physical port on the hub is the “Physical Port Number”. When remapping mode is enabled (PRTMAP_EN in the Configuration Data Byte 3 Register (CFG3)), the hub's downstream port numbers can be remapped to different logical port numbers assigned by the host.

Note: The OEM must ensure that Contiguous Logical Port Numbers are used, starting from one up to the maximum number of enabled ports. This ensures that the hub's ports are numbered in accordance with the way a Host will communicate with the ports.
<table>
<tr><td rowspan="4">Bits[7:4] =</td><td>0000</td><td>Physical Port 2 is disabled</td></tr>
<tr><td>0001</td><td>Physical Port 2 is mapped to Logical Port 1</td></tr>
<tr><td>0010</td><td>Physical Port 2 is mapped to Logical Port 2</td></tr>
<tr><td>0011 to 1111</td><td>RESERVED
Will default to 0000 value.</td></tr>
<tr><td rowspan="4">Bits[3:0] =</td><td>0000</td><td>Physical Port 1 is disabled</td></tr>
<tr><td>0001</td><td>Physical Port 1 is mapped to Logical Port 1</td></tr>
<tr><td>0010</td><td>Physical Port 1 is mapped to Logical Port 2</td></tr>
<tr><td>0011 to 1111</td><td>RESERVED
Will default to 0000 value.</td></tr>
</table>
</td><td>R/W</td><td>00h</td></tr>
</table>

4.4.31 STATUS/COMMAND REGISTER (STCD)

Address: FFh Size: 8 bits

Bits	Description	Type	Default
7:3	**RESERVED**	-	-
2	**SMBus Interface Power Down (INTF_PW_DN)** 0 = Interface is active 1 = Interface power down after ACK has completed **Note:** This bit is write once and is only cleared by assertion of the external RESET_N pin.	R/W	0b
1	**Reset (RESET)** Resets the SMBus Interface and internal memory back to RESET_N assertion default settings. 0 = Normal Run/Idle State 1 = Force a reset of the registers to their default state **Note:** During this reset, this bit is automatically cleared to its default value of 0.	R/W	0b
0	**USB Attach and Write Protect (USB_ATTACH)** 0 = SMBus slave interface is active 1 = Hub will signal a USB attach event to an upstream device, and the internal memory that is not Modify capable in the address range 00h-FEh, is “write-protected” to prevent unintentional data corruption. **Note:** This bit is write once and is only cleared by assertion of the external RESET_N pin.	R/W	0b

© 2013 - 2015 Microchip Technology Inc.

5.0 DC PARAMETERS

5.1 Maximum Ratings

Parameter	Symbol	MIN	MAX	Units	Comments
Storage Temperature	T_{STOR}	-55	150	°C	
Lead Temperature					Refer to *JEDEC Specification J-STD-020D* 3.
3.3 V supply voltage	VDD33		4.6	V	
Voltage on any I/O pin		-0.5	5.5	V	
Voltage on **XTALIN**		-0.5	4.0	V	
Voltage on **XTALOUT**		-0.5	2.5	V	

Note 5-1 Refer to JEDEC Specification J-STD-020D [3].

Note 5-2 Stresses above the specified parameters could cause permanent damage to the device. This is a stress rating only and functional operation of the device at any condition above those indicated in the operation sections of this specification is not implied.

Note 5-3 When powering this device from laboratory or system power supplies, it is important that the absolute maximum ratings not be exceeded or device failure can result. Some power supplies exhibit voltage spikes on their outputs when the AC power is switched on or off. In addition, voltage transients on the AC power line may appear on the DC output. When this possibility exists, it is suggested that a clamp circuit be used.

5.2 Operating Conditions

Parameter	Symbol	MIN	MAX	Units	Comments
USB2422 Operating Temperature	T_A	0	70	°C	Ambient temperature in still air
USB2422-i Operating Temperature	T_A	-40	85	°C	Ambient temperature in still air
3.3 V supply voltage	VDD33	3.0	3.6	V	
3.3 V supply rise time	t_{RT33}	0	400	µs	See Figure 5-1
Voltage on any I/O pin		-0.3	5.5	V	If any 3.3 V supply voltage drops below 3.0 V, then the MAX becomes: (3.3 V supply voltage) + 0.5
Voltage on **XTALIN**		-0.3	VDD12 + 0.3	V	

FIGURE 5-1: SUPPLY RISE TIME MODEL

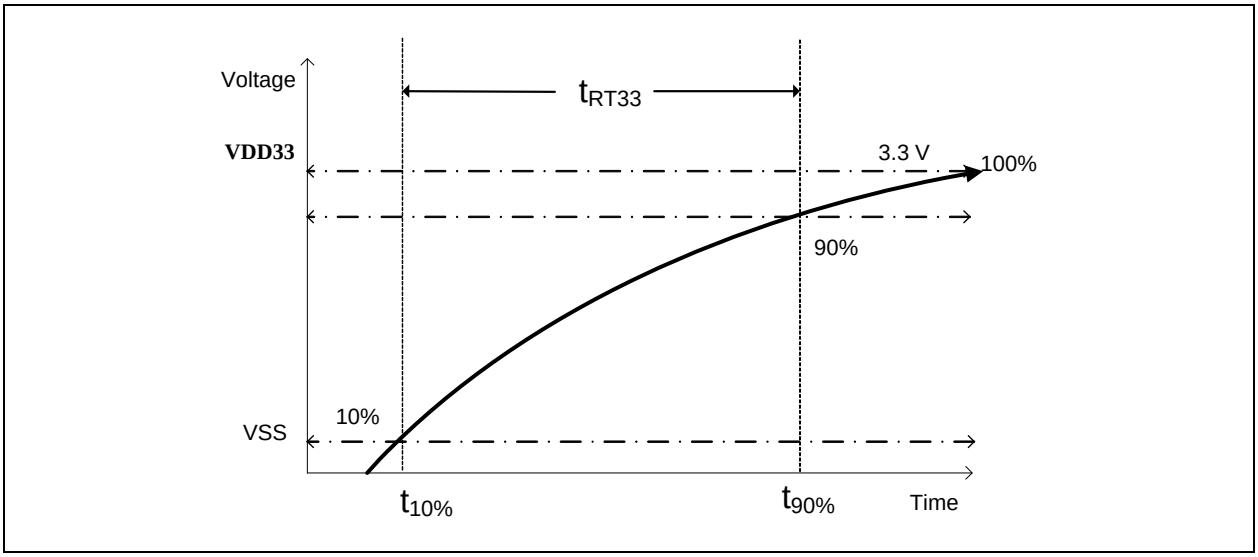

TABLE 5-1: DC ELECTRICAL CHARACTERISTICS

Parameter	Symbol	MIN	TYP	MAX	Units	Comments
I, IS Type Input Buffer						
Low Input Level	V_{ILI}			0.8	V	TTL Levels
High Input Level	V_{IHI}	2.0			V	
Input Leakage	I_{IL}	-10		+10	µA	V_{IN} = 0 to **VDD33**
Hysteresis (IS only)	V_{HYSI}	250		350	mV	
Input Buffer with Pull-Up (IPU)						
Low Input Level	V_{ILI}			0.8	V	TTL Levels
High Input Level	V_{IHI}	2.0			V	
Low Input Leakage	I_{ILL}	+35		+90	µA	V_{IN} = 0
High Input Leakage	I_{IHL}	-10		+10	µA	V_{IN} = **VDD33**
Input Buffer with Pull-Down (IPD)						
Low Input Level	V_{ILI}			0.8	V	TTL Levels
High Input Level	V_{IHI}	2.0			V	
Low Input Leakage	I_{ILL}	+10		-10	µA	V_{IN} = 0
High Input Leakage	I_{IHL}	-35		-90	µA	V_{IN} = **VDD33**
ICLK Input Buffer						
Low Input Level	V_{ILCK}			0.3	V	
High Input Level	V_{IHCK}	0.9			V	
Input Leakage	I_{IL}	-10		+10	µA	V_{IN} = 0 to **VDD33**

© 2013 - 2015 Microchip Technology Inc.

TABLE 5-1: DC ELECTRICAL CHARACTERISTICS (CONTINUED)

Parameter	Symbol	MIN	TYP	MAX	Units	Comments
O12, I/O12 & I/OSD12 Type Buffer						
Low Output Level	V_{OL}			0.4	V	I_{OL} = 12 mA @ **VDD33** = 3.3 V
High Output Level	V_{OH}	2.4			V	I_{OH} = -12 mA @ **VDD33** = 3.3 V
Output Leakage	I_{OL}	-10		+10	µA	
Hysteresis (SD pad only)	V_{HYSC}	250		350	mV	V_{IN} = **VDD33** (Note 5-1)
Supply Current Unconfigured ***Hi-Speed Host***	$I_{CCINTHS}$		40	45	mA	
Supply Current ***Hi-Speed Host*****, each additional downstream port**	$I_{CCINTFS}$		35	40	mA	Note 5-8
Supply Current ***Hi-Speed Host*****, 1 downstream port**	I_{HCH1}		47	58	mA	Note 5-8
Supply Current ***Hi-Speed Host*****, 2 downstream ports**	I_{HCH2}		70	89	mA	Note 5-8
Supply Current **Full-Speed Host, 1 downstream port**	I_{FCC1}		29	40	mA	Note 5-8
Supply Current **Full-Speed Host, 2 downstream ports**	I_{FCC2}		35	45	mA	Note 5-8
Supply Current Suspend	I_{CSBY}		425	Note 5-6	µA	
Supply Current Reset	I_{CRST}		300	Note 5-7	µA	

Note 5-4 Output leakage is measured with the current pins in high impedance.

Note 5-5 See *USB 2.0 Specification* 1. for USB DC electrical characteristics.

Note 5-6 1000 µA for commercial temperature part, and 1200 µA for industrial temperature part.

Note 5-7 800 µA for commercial temperature part, and 1000 µA for industrial temperature part.

Note 5-8 Current measured during peak USB traffic and does not reflect the average current draw.

5.2.1 PIN CAPACITANCE

TABLE 5-2: PIN CAPACITANCE

Parameter	Symbol	Limits			Unit	Test Condition
		MIN	TYP	MAX		
Clock Input Capacitance	C_{XTAL}			6	pF	All pins except USB pins and the pins under the test tied to AC ground.
Input Capacitance	C_{IN}			6	pF	Capacitance T_A = 25°C fc = 1 MHz VDD33 = 3.3 V
Output Capacitance	C_{OUT}			6	pF	The maximum capacitance values include the full length of the pin pad.

6.0 AC SPECIFICATIONS

6.1 Oscillator/Crystal

Parallel Resonant, Fundamental Mode, 24 MHz ±350 ppm.

FIGURE 6-1: TYPICAL CRYSTAL CIRCUIT

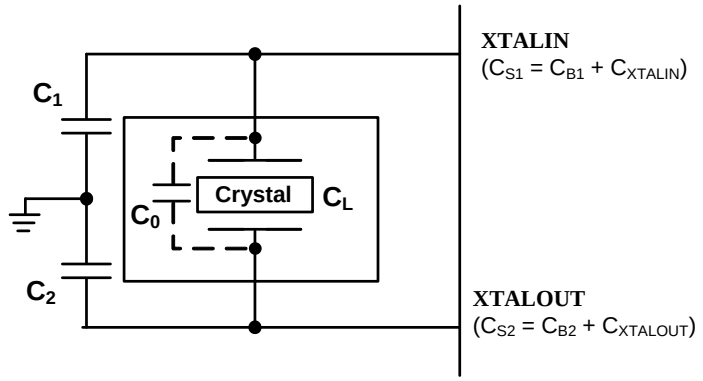

TABLE 6-1: CRYSTAL CIRCUIT LEGEND

Symbol	Description	In Accordance with
C_0	Crystal shunt capacitance	Crystal manufacturer's specification (See Note 6-1)
C_L	Crystal load capacitance	
C_B	Total board or trace capacitance	OEM board design
C_S	Stray capacitance	Microchip IC and OEM board design
C_{XTAL}	XTAL pin input capacitance	Microchip IC
C_1	Load capacitors installed on OEM board	Calculated values based on Figure 6-2, "Formula to Find the Value of C1 and C2" (See Note 6-2)
C_2		

FIGURE 6-2: FORMULA TO FIND THE VALUE OF C_1 AND C_2

$$C_1 = 2 \times (C_L - C_0) - C_{S1}$$

$$C_2 = 2 \times (C_L - C_0) - C_{S2}$$

Note 6-1 C_0 is usually included (subtracted by the crystal manufacturer) in the specification for C_L and should be set to 0 for use in the calculation of the capacitance formulas in Figure 6-2, "Formula to Find the Value of C1 and C2". However, the PCB itself may present a parasitic capacitance between **XTALIN** and **XTALOUT**. For an accurate calculation of C_1 and C_2, take the parasitic capacitance between traces **XTALIN** and **XTALOUT** into account.

Note 6-2 Each of these capacitance values is typically approximately 18 pF.

© 2013 - 2015 Microchip Technology Inc.

6.2 External Clock

50% Duty cycle ± 10%, 24 MHz ± 350 ppm.

The external clock is recommended to conform to the signaling level designated in the JESD76-2 specification on 1.2 V CMOS Logic. **XTALOUT** should be treated as a weak (< 1 mA) buffer output.

6.2.1 USB 2.0

The Microchip hub conforms to all voltage, power, and timing characteristics and specifications as set forth in the *USB 2.0 Specification* 1.. See the *USB Specification* for more information.

6.3 SMBus Interface

The Microchip hub conforms to all voltage, power, and timing characteristics and specifications as set forth in the *SMBus 1.0 Specification* 2. for slave-only devices (except as noted in Section 4.3, "SMBus," on page 18).

7.0 PACKAGE OUTLINE

FIGURE 7-1: 24-SQFN PACKAGE

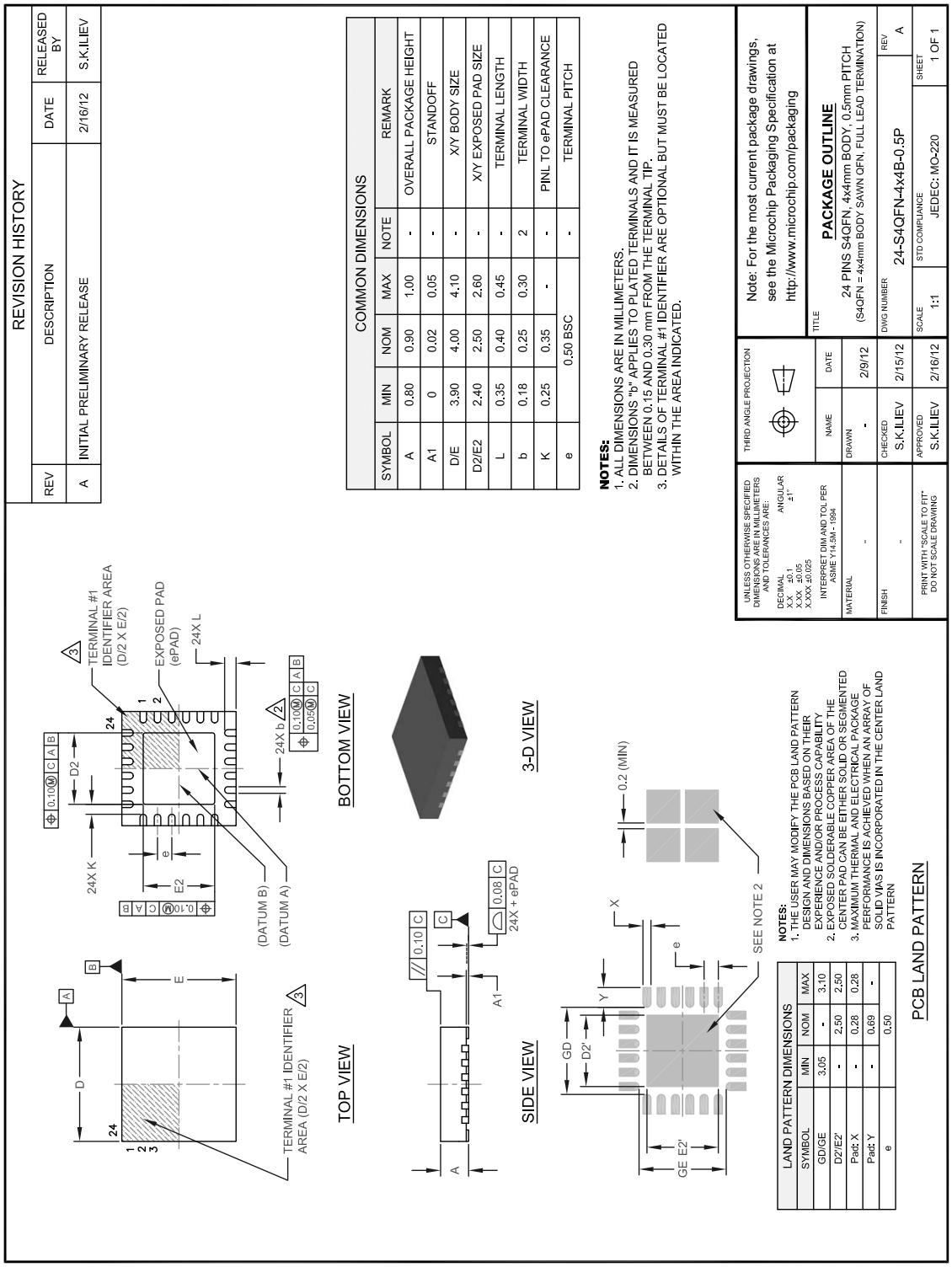

© 2013 - 2015 Microchip Technology Inc.

APPENDIX A: ACRONYMS

OCS: Over-Current Sense

PCB: Printed Circuit Board

PHY: Physical Layer

PLL: Phase-Locked Loop

SQFN: Sawn Quad Flat No Leads

RoHS: Restriction of Hazardous Substances Directive

SCL: Serial Clock

SIE: Serial Interface Engine

SMBus: System Management Bus

TT: Transaction Translator

APPENDIX B: REFERENCES

1. Universal Serial Bus Specification, Version 2.0, April 27, 2000 (12/7/2000 and 5/28/2002 Errata)
   USB Implementers Forum, Inc. http://www.usb.org
2. System Management Bus Specification, version 1.0
   SMBus. http://smbus.org/specs/
3. JEDEC Specifications: JESD76-2 (June 2001) and J-STD-020D.1 (March 2008)
   JEDEC Global Standards for the Microelectronics Industry.http://www.jedec.org/standards-documents
4. USB Battery Charging Specification, Revision 1.1, April 15, 2009
   USB Implementers Forum, Inc. http://www.usb.org

© 2013 - 2015 Microchip Technology Inc.

APPENDIX C: DATA SHEET REVISION HISTORY

TABLE C-1: REVISION HISTORY

REVISION LEVEL & DATE	SECTION/FIGURE/ENTRY	CORRECTION
DS00001726B (08-21-15)	FIGURE 2-6: Example Application - Non-SoC Based Design on page 12	Updated figure to correct removable and non-removable port assignments.
	Ordering Codes	Updated reel size to 5000.
	Section 7.0, "Package Outline"	Removed tape and reel drawings.
DS00001726A replaces the previous SMSC version rev. 1.0		
Rev. 1.0 (06-04-13)	Initial Revision	

THE MICROCHIP WEB SITE

Microchip provides online support via our WWW site at www.microchip.com. This web site is used as a means to make files and information easily available to customers. Accessible by using your favorite Internet browser, the web site contains the following information:

- **Product Support** – Data sheets and errata, application notes and sample programs, design resources, user's guides and hardware support documents, latest software releases and archived software
- **General Technical Support** – Frequently Asked Questions (FAQ), technical support requests, online discussion groups, Microchip consultant program member listing
- **Business of Microchip** – Product selector and ordering guides, latest Microchip press releases, listing of seminars and events, listings of Microchip sales offices, distributors and factory representatives

CUSTOMER CHANGE NOTIFICATION SERVICE

Microchip's customer notification service helps keep customers current on Microchip products. Subscribers will receive e-mail notification whenever there are changes, updates, revisions or errata related to a specified product family or development tool of interest.

To register, access the Microchip web site at www.microchip.com. Under "Support", click on "Customer Change Notification" and follow the registration instructions.

CUSTOMER SUPPORT

Users of Microchip products can receive assistance through several channels:

- Distributor or Representative
- Local Sales Office
- Field Application Engineer (FAE)
- Technical Support

Customers should contact their distributor, representative or field application engineer (FAE) for support. Local sales offices are also available to help customers. A listing of sales offices and locations is included in the back of this document.

Technical support is available through the web site at: http://www.microchip.com/support

© 2013 - 2015 Microchip Technology Inc.

PRODUCT IDENTIFICATION SYSTEM

To order or obtain information, e.g., on pricing or delivery, refer to the factory or the listed sales office.

PART NO.	[X]	-	XXX	-	[X](1)
Device	Temperature Range		Package		Tape and Reel Option

Device:	USB2422			
Temperature Range:	Blank	=	0°C to +70°C	(Commercial)
	I	=	-40°C to +85°C	(Industrial)
Package:	MJ	=	24-pin SQFN (4 x 4 mm)	
Tape and Reel Option:	Blank	=	Standard packaging (tray)	
	TR	=	Tape and Reel (1)	

Examples:

a) USB2422/MJ
Commercial temperature,
24-pin SQFN (4 x 4 mm) Tray

b) USB2422T/MJ
Commercial temperature,
24-pin SQFN (4 x 4 mm) Tape & Reel

c) USB2422-I/MJ
Industrial temperature,
24-pin SQFN (4 x 4 mm) Tray

d) USB2422T-I/MJ
Industrial temperature,
24-pin SQFN (4 x 4 mm) Tape & Reel

Note 1: Tape and Reel identifier only appears in the catalog part number description. This identifier is used for ordering purposes and is not printed on the device package. Check with your Microchip Sales Office for package availability with the Tape and Reel option. Reel size is 5,000.

Note the following details of the code protection feature on Microchip devices:

- Microchip products meet the specification contained in their particular Microchip Data Sheet.
- Microchip believes that its family of products is one of the most secure families of its kind on the market today, when used in the intended manner and under normal conditions.
- There are dishonest and possibly illegal methods used to breach the code protection feature. All of these methods, to our knowledge, require using the Microchip products in a manner outside the operating specifications contained in Microchip's Data Sheets. Most likely, the person doing so is engaged in theft of intellectual property.
- Microchip is willing to work with the customer who is concerned about the integrity of their code.
- Neither Microchip nor any other semiconductor manufacturer can guarantee the security of their code. Code protection does not mean that we are guaranteeing the product as "unbreakable."

Code protection is constantly evolving. We at Microchip are committed to continuously improving the code protection features of our products. Attempts to break Microchip's code protection feature may be a violation of the Digital Millennium Copyright Act. If such acts allow unauthorized access to your software or other copyrighted work, you may have a right to sue for relief under that Act.

Information contained in this publication regarding device applications and the like is provided only for your convenience and may be superseded by updates. It is your responsibility to ensure that your application meets with your specifications. MICROCHIP MAKES NO REPRESENTATIONS OR WARRANTIES OF ANY KIND WHETHER EXPRESS OR IMPLIED, WRITTEN OR ORAL, STATUTORY OR OTHERWISE, RELATED TO THE INFORMATION, INCLUDING BUT NOT LIMITED TO ITS CONDITION, QUALITY, PERFORMANCE, MERCHANTABILITY OR FITNESS FOR PURPOSE**.** Microchip disclaims all liability arising from this information and its use. Use of Microchip devices in life support and/or safety applications is entirely at the buyer's risk, and the buyer agrees to defend, indemnify and hold harmless Microchip from any and all damages, claims, suits, or expenses resulting from such use. No licenses are conveyed, implicitly or otherwise, under any Microchip intellectual property rights unless otherwise stated.

Trademarks

The Microchip name and logo, the Microchip logo, dsPIC, FlashFlex, flexPWR, JukeBlox, KEELOQ, KEELOQ logo, Kleer, LANCheck, MediaLB, MOST, MOST logo, MPLAB, OptoLyzer, PIC, PICSTART, PIC^{32} logo, RightTouch, SpyNIC, SST, SST Logo, SuperFlash and UNI/O are registered trademarks of Microchip Technology Incorporated in the U.S.A. and other countries.

The Embedded Control Solutions Company and mTouch are registered trademarks of Microchip Technology Incorporated in the U.S.A.

Analog-for-the-Digital Age, BodyCom, chipKIT, chipKIT logo, CodeGuard, dsPICDEM, dsPICDEM.net, ECAN, In-Circuit Serial Programming, ICSP, Inter-Chip Connectivity, KleerNet, KleerNet logo, MiWi, MPASM, MPF, MPLAB Certified logo, MPLIB, MPLINK, MultiTRAK, NetDetach, Omniscient Code Generation, PICDEM, PICDEM.net, PICkit, PICtail, RightTouch logo, REAL ICE, SQI, Serial Quad I/O, Total Endurance, TSHARC, USBCheck, VariSense, ViewSpan, WiperLock, Wireless DNA, and ZENA are trademarks of Microchip Technology Incorporated in the U.S.A. and other countries.

SQTP is a service mark of Microchip Technology Incorporated in the U.S.A.

Silicon Storage Technology is a registered trademark of Microchip Technology Inc. in other countries.

GestIC is a registered trademarks of Microchip Technology Germany II GmbH & Co. KG, a subsidiary of Microchip Technology Inc., in other countries.

All other trademarks mentioned herein are property of their respective companies.

© 2013 - 2015, Microchip Technology Incorporated, Printed in the U.S.A., All Rights Reserved.

ISBN: 9781632776990

QUALITY MANAGEMENT SYSTEM
CERTIFIED BY DNV
= ISO/TS 16949 =

Microchip received ISO/TS-16949:2009 certification for its worldwide headquarters, design and wafer fabrication facilities in Chandler and Tempe, Arizona; Gresham, Oregon and design centers in California and India. The Company's quality system processes and procedures are for its PIC® MCUs and dsPIC® DSCs, KEELOQ® code hopping devices, Serial EEPROMs, microperipherals, nonvolatile memory and analog products. In addition, Microchip's quality system for the design and manufacture of development systems is ISO 9001:2000 certified.

© 2013 - 2015 Microchip Technology Inc.

Worldwide Sales and Service

AMERICAS

Corporate Office
2355 West Chandler Blvd.
Chandler, AZ 85224-6199
Tel: 480-792-7200
Fax: 480-792-7277
Technical Support:
http://www.microchip.com/support
Web Address:
www.microchip.com

Atlanta
Duluth, GA
Tel: 678-957-9614
Fax: 678-957-1455

Austin, TX
Tel: 512-257-3370

Boston
Westborough, MA
Tel: 774-760-0087
Fax: 774-760-0088

Chicago
Itasca, IL
Tel: 630-285-0071
Fax: 630-285-0075

Cleveland
Independence, OH
Tel: 216-447-0464
Fax: 216-447-0643

Dallas
Addison, TX
Tel: 972-818-7423
Fax: 972-818-2924

Detroit
Novi, MI
Tel: 248-848-4000

Houston, TX
Tel: 281-894-5983

Indianapolis
Noblesville, IN
Tel: 317-773-8323
Fax: 317-773-5453

Los Angeles
Mission Viejo, CA
Tel: 949-462-9523
Fax: 949-462-9608

New York, NY
Tel: 631-435-6000

San Jose, CA
Tel: 408-735-9110

Canada - Toronto
Tel: 905-673-0699
Fax: 905-673-6509

ASIA/PACIFIC

Asia Pacific Office
Suites 3707-14, 37th Floor
Tower 6, The Gateway
Harbour City, Kowloon

Hong Kong
Tel: 852-2943-5100
Fax: 852-2401-3431

Australia - Sydney
Tel: 61-2-9868-6733
Fax: 61-2-9868-6755

China - Beijing
Tel: 86-10-8569-7000
Fax: 86-10-8528-2104

China - Chengdu
Tel: 86-28-8665-5511
Fax: 86-28-8665-7889

China - Chongqing
Tel: 86-23-8980-9588
Fax: 86-23-8980-9500

China - Dongguan
Tel: 86-769-8702-9880

China - Hangzhou
Tel: 86-571-8792-8115
Fax: 86-571-8792-8116

China - Hong Kong SAR
Tel: 852-2943-5100
Fax: 852-2401-3431

China - Nanjing
Tel: 86-25-8473-2460
Fax: 86-25-8473-2470

China - Qingdao
Tel: 86-532-8502-7355
Fax: 86-532-8502-7205

China - Shanghai
Tel: 86-21-5407-5533
Fax: 86-21-5407-5066

China - Shenyang
Tel: 86-24-2334-2829
Fax: 86-24-2334-2393

China - Shenzhen
Tel: 86-755-8864-2200
Fax: 86-755-8203-1760

China - Wuhan
Tel: 86-27-5980-5300
Fax: 86-27-5980-5118

China - Xian
Tel: 86-29-8833-7252
Fax: 86-29-8833-7256

ASIA/PACIFIC

China - Xiamen
Tel: 86-592-2388138
Fax: 86-592-2388130

China - Zhuhai
Tel: 86-756-3210040
Fax: 86-756-3210049

India - Bangalore
Tel: 91-80-3090-4444
Fax: 91-80-3090-4123

India - New Delhi
Tel: 91-11-4160-8631
Fax: 91-11-4160-8632

India - Pune
Tel: 91-20-3019-1500

Japan - Osaka
Tel: 81-6-6152-7160
Fax: 81-6-6152-9310

Japan - Tokyo
Tel: 81-3-6880- 3770
Fax: 81-3-6880-3771

Korea - Daegu
Tel: 82-53-744-4301
Fax: 82-53-744-4302

Korea - Seoul
Tel: 82-2-554-7200
Fax: 82-2-558-5932 or
82-2-558-5934

Malaysia - Kuala Lumpur
Tel: 60-3-6201-9857
Fax: 60-3-6201-9859

Malaysia - Penang
Tel: 60-4-227-8870
Fax: 60-4-227-4068

Philippines - Manila
Tel: 63-2-634-9065
Fax: 63-2-634-9069

Singapore
Tel: 65-6334-8870
Fax: 65-6334-8850

Taiwan - Hsin Chu
Tel: 886-3-5778-366
Fax: 886-3-5770-955

Taiwan - Kaohsiung
Tel: 886-7-213-7828

Taiwan - Taipei
Tel: 886-2-2508-8600
Fax: 886-2-2508-0102

Thailand - Bangkok
Tel: 66-2-694-1351
Fax: 66-2-694-1350

EUROPE

Austria - Wels
Tel: 43-7242-2244-39
Fax: 43-7242-2244-393

Denmark - Copenhagen
Tel: 45-4450-2828
Fax: 45-4485-2829

France - Paris
Tel: 33-1-69-53-63-20
Fax: 33-1-69-30-90-79

Germany - Dusseldorf
Tel: 49-2129-3766400

Germany - Karlsruhe
Tel: 49-721-625370

Germany - Munich
Tel: 49-89-627-144-0
Fax: 49-89-627-144-44

Italy - Milan
Tel: 39-0331-742611
Fax: 39-0331-466781

Italy - Venice
Tel: 39-049-7625286

Netherlands - Drunen
Tel: 31-416-690399
Fax: 31-416-690340

Poland - Warsaw
Tel: 48-22-3325737

Spain - Madrid
Tel: 34-91-708-08-90
Fax: 34-91-708-08-91

Sweden - Stockholm
Tel: 46-8-5090-4654

UK - Wokingham
Tel: 44-118-921-5800
Fax: 44-118-921-5820

07/14/15

Mouser Electronics

Authorized Distributor

Click to View Pricing, Inventory, Delivery & Lifecycle Information:

Microchip:
USB2422-I/MJ USB2422/MJ USB2422T/MJ USB2422T-I/MJ USB2422I-CP USB2422-CP USB2422I-CP-TR USB2422-CP-TR