Mallory Sonalert Products,Inc.	Part #: FL1M-8SJ-3 8mm Panel Light
Sales Outline Drawing	Revision: **B**

Specifications:

Panel Hole	8 mm
Voltage Type	DC
LED Color Available	Red, Green, Blue, Yellow, or White
Lens Color	Same as LED
Rated Voltage Available	See table below
Max Current Draw	20 mA
Storage & Operating Temperature	-20 °C to +85 °C
Ingress Protection Rating	IP65
LED Life	70,000 hours
Weight (Typical)	4.3 g
Housing Material	Nickel-plated Brass and Polycarbonate
Termination Type	Pin Terminals
Pin Length	15±10mm
Max Nut Torque	13 ft-lbs (18 Nm)
Soldering Conditions	Max 260°C (500°F) for 3 seconds.
Panel Thickness	0.04-0.39" (1-10 mm)
Hardware Kit	LM8-FSQ8-MHDP8

RoHS Compliant

Dimensions (mm):

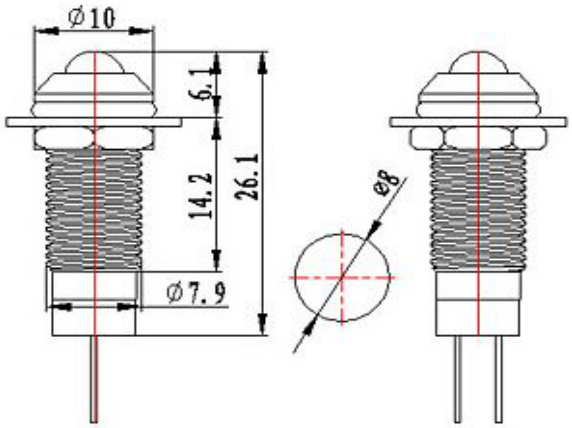

Part Number:

FL1M-8SJ-3-X#V

B=Blue
G=Green
R=Red
Y=Yellow
W=White

Rated Voltage

	Light Intensity	Dominant Wavelength	Viewing Angle
Red	1000 -1500 mcd	622 nm	180°
Green	8000 -10000 mcd	522 nm	180°
Yellow	1000 -1500 mcd	590 nm	180°
Blue	2000 - 3000 mcd	464 nm	180°

Rated Voltage	2 VDC	3 VDC	6 VDC	12 VDC	24 VDC	48 VDC	110 VDC	220 VDC	380 VDC
Red	1.8-2.2V	2.7-3.3V	5.4-6.6V	10.8-13.2V	21.6-26.4V	43.2-52.8V	99-121V	198-242V	342-418V
Green	N/A	3-3.2V	5.4-6.6V	10.8-13.2V	21.6-26.4V	43.2-52.8V	99-121V	198-242V	342-418V
Blue	N/A	3.12-3.2V	5.4-6.6V	10.8-13.2V	21.6-26.4V	43.2-52.8V	99-121V	198-242V	342-418V
Yellow	2-2.2V	2.7-3.3V	5.4-6.6V	10.8-13.2V	21.6-26.4V	43.2-52.8V	99-121V	198-242V	342-418V
White	N/A	3-3.2V	5.4-6.6V	10.8-13.2V	21.6-26.4V	43.2-52.8V	99-121V	198-242V	342-418V

4411 South High School Road, Indianapolis, Indiana 46241 U.S.A · Phone: (317) 612-1000 Fax: (317) 612-1010 www.mspindy.com

Mouser Electronics

Authorized Distributor

Click to View Pricing, Inventory, Delivery & Lifecycle Information:

Mallory Sonalert:
FL1M-8SJ-3-Y110V FL1M-8SJ-3-R2V FL1M-8SJ-3-R110V FL1M-8SJ-3-R24V FL1M-8SJ-3-G24V FL1M-8SJ-3-Y2V FL1M-8SJ-3-G3V FL1M-8SJ-3-R12V FL1M-8SJ-3-G110V FL1M-8SJ-3-G12V FL1M-8SJ-3-Y12V FL1M-8SJ-3-Y24V