QJxx10xHx and QJxx10xx Series

10 A High Temperature Alternistor and Standard (High Communication) Triacs

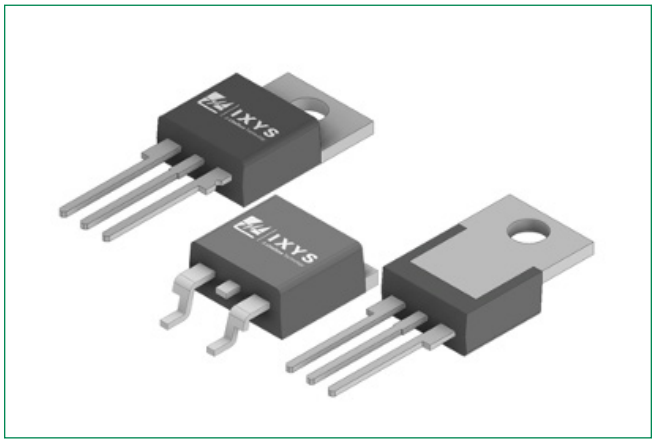

Agency Approvals and Environmental

Environmental Approvals
RoHS

Note: UL recognition agency file number E71639 (L package only)

Main Features

Characteristic	Value	Unit
$I_{T(RMS)}$	10	A
V_{DRM}/V_{RRM}	800	V
$I_{GT\ (Q1)}$	10 to 50	mA

Schematic Symbol

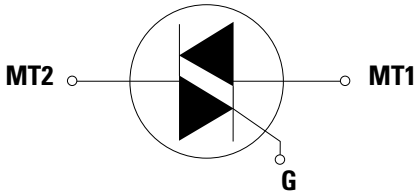

Description

This 10 A high temperature Alternistor and Standard TRIAC series, offered in TO-220AB, TO-220 isolated, and TO-263 packages, has 150 °C maximum junction temperature and 120 A ITSM (60 Hz).

This series enables easier thermal management and higher surge handling capability in AC power control applications such as heater control, motor speed control, lighting controls, and static switching relays. Alternistor TRIAC operates in quadrant I, II, and III, and offers high performance in applications requiring high commutation capability.

Features & Benefits

- Recognized to UL 1557 as an Electrically Isolated Semiconductor Device
- Glass-passivated junctions
- Surge capability up to 120 A and 60 Hz
- The L-package has an isolation rating of 2500 VRMS
- Solid-state switching eliminates arcing or contact bounce that creates voltage transients
- No contacts to wear out from reaction of switching events
- Restricted (or limited) RFI generation, depending on activation point sine wave
- Requires only a small gate activation pulse in each half-cycle
- RoHS compliant

Applications

- Excellent for AC switching and phase control applications such as heating, lighting, and motor speed controls. Typical applications are AC solid-state switches, light dimmers, power tools, lawn care equipment, home/brown goods, and white goods appliances.
- Alternistor Triacs (no snubber required) are used in applications with extremely inductive loads requiring highest commutation performance.
- Internally constructed isolated packages are offered for ease of heat sinking with highest isolation voltage.
- Standard type devices normally operate in Quadrants I & III triggered from AC line

© 2021 Littelfuse, Inc.
Specifications are subject to change without notice.
Revised: GD. 05/06/21

QJxx10xHx and QJxx10xx Series

10 A High Temperature Alternistor and Standard (High Communication) Triacs

Maximum Ratings — Alternistor Triac (3 Quadrants)

Symbol	Parameter			Value	Unit
$I_{T(RMS)}$	RMS on-state current (full sine wave)	QJ8010LHy	T_C = 120°C	10	A
		QJ8010RHy QJ8010NHy	T_C = 130°C		
I_{TSM}	Non repetitive surge peak on-state current (full cycle, T_J initial = 25°C)	f = 50 Hz, t = 20 ms		100	A
		f = 60 Hz, t = 16.7 ms		120	
I^2t	I^2t Value for fusing	t_p = 8.3 ms		60	A^2s
di/dt	Critical rate of rise of on-state current	f = 60 Hz, T_J = 150°C		70	A/µs
I_{GTM}	Peak gate trigger current	t_p = 20 µs, T_J = 150°C		4	A
$P_{G(AV)}$	Average gate power dissipation	T_J = 150°C		0.5	W
T_{stg}	Storage temperature range	-		-40 to 150	°C
T_J	Operating junction temperature range	-		-40 to 150	°C
V_{DSM}/V_{RSM}	Peak Non-repetitive Blocking Voltage	Pulse Width = 100 µs		V_{DRM}/V_{RRM} + 200	V

Maximum Ratings — Standard Triac

Symbol	Parameter			Value	Unit
$V_{DSM}//V_{RSM}$	Peak non-repetitive blocking voltage	Pulse Width =100 µs	800 V	V_{DRM}/V_{RRM} + 200 V	V
$I_{T(RMS)}$	RMS on-state current (full sine wave)	QJxx10Ly	T_C = 120°C	10	A
		QJxx10Ry/QJxx10Ny	T_C = 130°C		
I_{TSM}	Non repetitive surge peak on-state current (full cycle, T_J initial = 25°C)	f = 50 Hz, t = 20 ms	QJxx10xy	100	A
		f = 60 Hz, t = 16.7 ms	QJxx10xy	120	
I^2t	I^2t Value for fusing	t_p = 8.3 ms	QJxx10xy	60	A^2s
di/dt	Critical rate of rise of on-state current I_G = 200mA with ≤ 0.1µs rise time	f = 60 Hz, T_J =150 °C		70	A/µs
I_{GTM}	Peak gate trigger current	t_p = 20 µs, T_J =150 °C		4	A/µs
$P_{G(AV)}$	Average gate power dissipation	T_J =150 °C		0.5	W
T_{stg}	Storage temperature range	-		-40 to 150	°C
T_J	Operating junction temperature range	-		-40 to 150	°C

Note: xx=voltage/10, x=package, y=sensitivity

Thermal Characteristics

Symbol	Parameter		Value	Unit
$R_{\Theta(J-C)}$	Thermal Resistance, junction-to-case (AC)	QJ8010RHy/QJ8010NHy QJ8010Ry/QJ8010Ny	1.2	°C/W
		QJ8010LHy/QJ8010Ly	2.3	
$R_{\Theta(J-A)}$	Thermal Resistance, junction-to-ambient (AC)	QJ8010RHy/QJ8010Ry	45	°C/W
		QJ8010LHy/QJ8010Ly	90	

© 2021 Littelfuse, Inc.
Specifications are subject to change without notice.
Revised: GD. 05/06/21

QJxx10xHx and QJxx10xx Series

10 A High Temperature Alternistor and Standard (High Communication) Triacs

Electrical Characteristics (TJ = 25°C, unless otherwise specified) — Alternistor Triac (3 Quadrants)

Symbol	Description	Conditions		QJ8010xH3			QJ8010xH4			QJ8010xH5			Unit
				MIN	TYP	MAX	MIN	TYP	MAX	MIN	TYP	MAX	
I_{GT}	DC Gate Trigger Current	V_D = 12 V, R_L = 60 Ω	I-II-III	-	-	10	-	-	35	-	-	50	mA
V_{GT}	DC Gate Trigger Voltage	V_D = 12 V, R_L = 60 Ω	I-II-III	-	-	1.3	-	-	1.3	-	-	1.3	V
V_{GD}	Gate Non-trigger Voltage	$V_D = V_{DRM}$, R_L = 3.3 kΩ, T_J = 150 °C	I-II-III	0.2	-	-	0.2	-	-	0.2	-	-	V
I_H	Holding Current	I_T = 100 mA		-	-	15	-	-	40	-	-	50	mA
dv/dt	Critical Rate-of-rise of Off-stage Voltage	$V_D = V_{DRM}$, Gate Open, T_J = 150 °C		150	-	-	450	-	-	700	-	-	V/µs
		V_D = 2/3 V_{DRM}, Gate Open, T_J = 150 °C		200	-	-	600	-	-	1000	-	-	
(dv/dt)c		(di/dt)/c = 6.5 A/ms, TJ = 150 °C		10	-	-	20	-	-	30	-	-	V/µs
t_{gt}	Turn-on Time	I_G = 2 x I_{GT}, P_W = 15µs, IT = 14.1 A(pk)		-	4	-	-	-	7	-	-	9	-

Electrical Characteristics (TJ = 25°C, unless otherwise specified) — Standard Triac

Symbol	Description	Conditions	Quadrant		Value		Unit
					Qxx10x4	Qxx10x5	
I_{GT}	DC Gate Trigger Current	V_D = 12V R_L = 60 Ω	I – II – III	MAX.	25	50	mA
			IV		50	50	
V_{GT}	DC Gate Trigger Voltage	V_D = 12V R_L = 60 Ω	ALL	MAX.	1.3		V
V_{GD}	Gate Non-trigger Voltage	$V_D = V_{DRM}$ R_L = 3.3 kΩ T_J = 150°C	ALL	MIN.	0.2		V
I_H	Holding Current	I_T = 100mA		MAX.	35	50	mA
dv/dt	Critical Rate-of-rise of Off-stage Voltage	$V_D = V_{DRM}$ Gate Open T_J = 150°C	800V	MIN.	600	1000	V/µs
		V_D = 2/3 V_{DRM} Gate Open T_J = 150°C			800	1200	
(dv/dt)c		(di/dt)c = 6.5 A/ms T_J = 150°C		TYP.	3	4	V/µs
t_{gt}	Turn-on Time	I_G = 2 x I_{GT} P_W = 15µs I_T = 14.1 A(pk)	I – II – III	TYP.	1-2-6	1-2-6	µs
			IV		10	11	

Static Characteristics

Symbol	Description	Conditions	Maximum Value	Unit
V_{TM}	Peak On-state Voltage	I_{TM} = 14.1A t_p = 380 µs	1.60	V
I_{DRM}/I_{RRM}	Off-state Current, Peak Repetitive	$V_D = V_{DRM} = V_{RRM}$, T_J = 25°C	10	µA
		$V_D = V_{DRM} = V_{RRM}$, T_J = 150°C	4	mA

© 2021 Littelfuse, Inc.
Specifications are subject to change without notice.
Revised: GD. 05/06/21

QJxx10xHx and QJxx10xx Series

10 A High Temperature Alternistor and Standard (High Communication) Triacs

Figure 1:
Definition of Quadrants

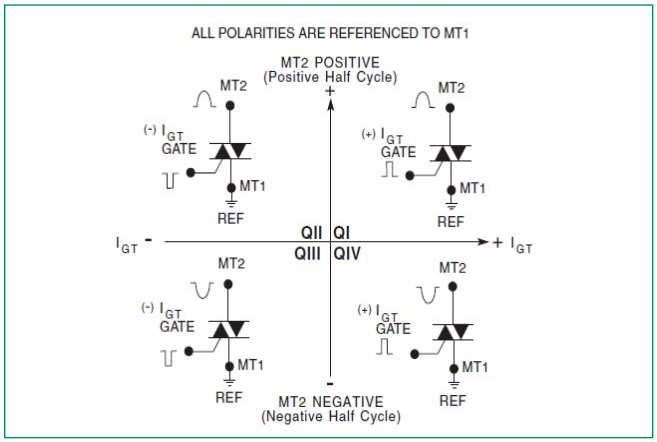

Note: Alternistors will not operate in QIV

Figure 2:
Normalized DC Gate Trigger Current for All Quadrants vs. Junction Temperature

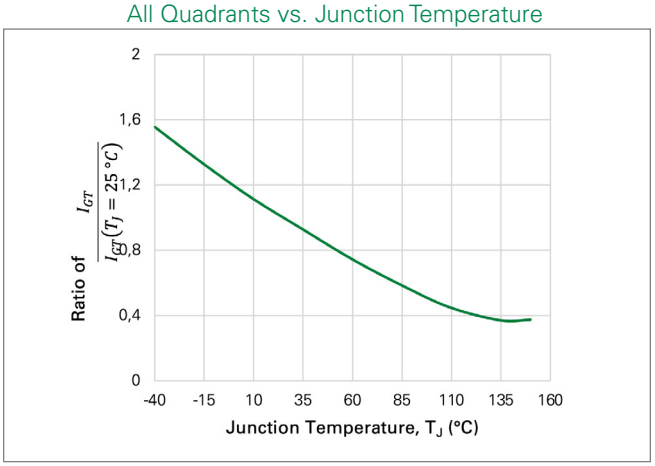

Figure 3:
Normalized DC Holding Current vs. Junction Temperature

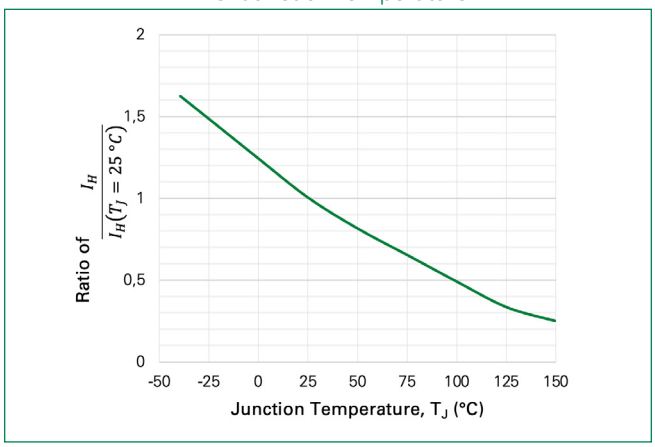

Figure 4:
Normalized DC Gate Trigger Voltage for All Quadrants vs. Junction Temperature

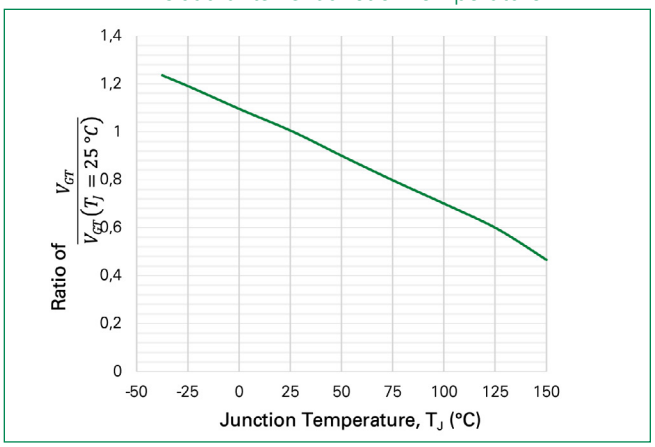

Figure 5:
Power Dissipation (Typical) vs. RMS On-State Current

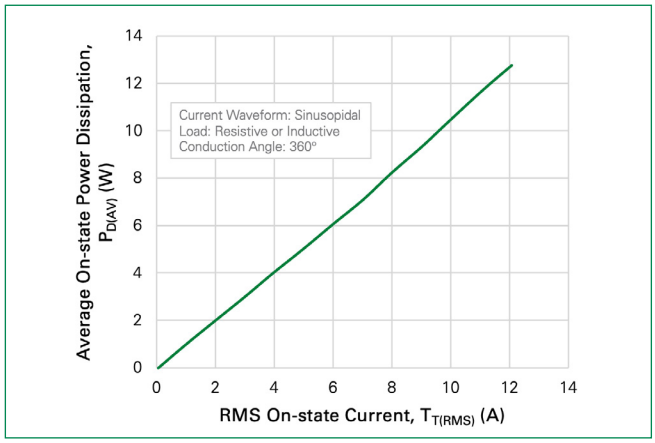

Figure 6:
Maximum Allowable Case Temperature vs. On-State Current

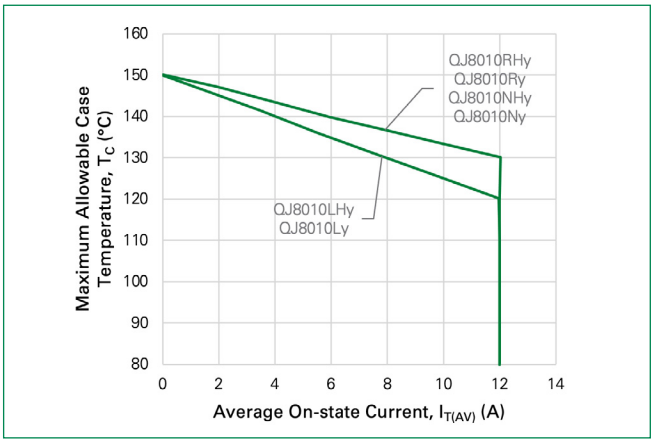

© 2021 Littelfuse, Inc.
Specifications are subject to change without notice.
Revised: GD. 05/06/21

QJxx10xHx and QJxx10xx Series

10 A High Temperature Alternistor and Standard (High Communication) Triacs

Figure 7:
Typical On-state Current vs. On-state Voltage

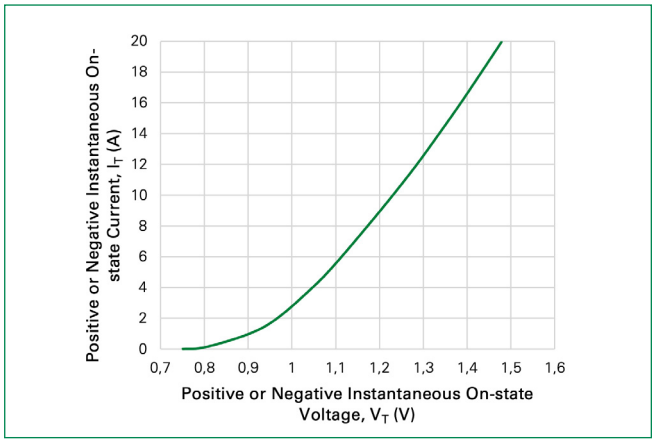

Figure 8:
Surge Peak On-state Current vs. Number of Cycles

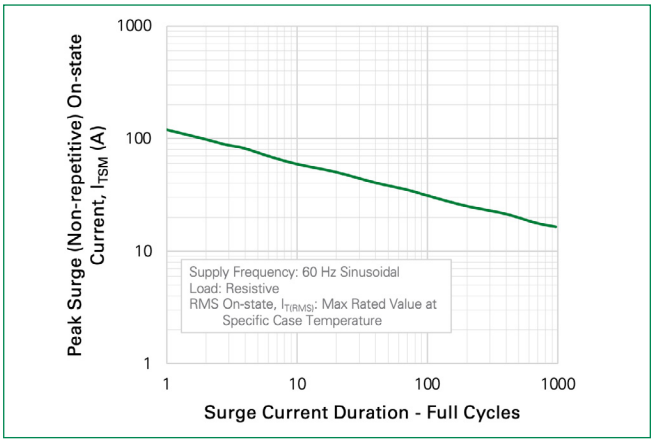

Notes:
1. Gate control may be lost during and immediately following surge current interval.
2. Overload may not be repeated until junction temperature has returned to steady-state rated value

© 2021 Littelfuse, Inc.
Specifications are subject to change without notice.
Revised: GD. 05/06/21

QJxx10xHx and QJxx10xx Series

10 A High Temperature Alternistor and Standard (High Communication) Triacs

Soldering Parameters

Reflow Condition		Pb – Free assembly
Pre Heat	**- Temperature Min ($T_{s(min)}$)**	150°C
	- Temperature Max ($T_{s(max)}$)	200°C
	- Time (min to max) (t_s)	60 to 180 s
Average ramp up rate (Liquidus Temp) (T_L) to peak		5°C/second max
$T_{S(max)}$ to T_L - Ramp-up Rate		5°C/second max
Reflow	**- Temperature (T_L) (Liquidus)**	217°C
	- Time (min to max) (t_s)	60 to 150 seconds
Peak Temperature (T_p)		260 °C $_{(\pm 5\ °C)}$
Time within 5°C of actual peak Temperature (t_p)		20 to 40 seconds
Ramp-down Rate		5°C/second max
Time 25°C to peak Temperature (T_p)		8 minutes Max.
Do not exceed		280°C

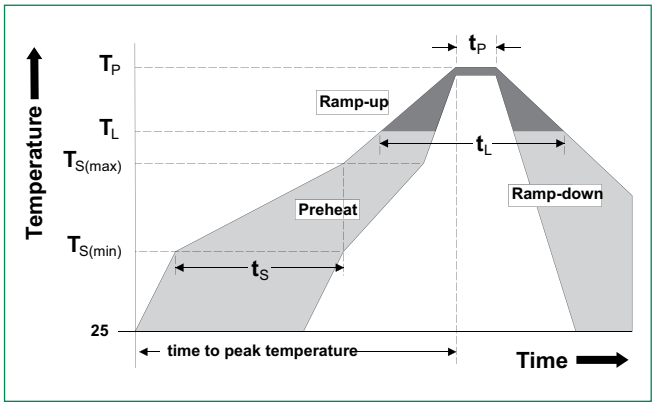

Physical Specifications

Terminal Finish	100% Matte Tin-plated
Body Material	UL recognized epoxy meeting flammabilty classification 94V-0.
Terminal Material	Copper Alloy

Design Considerations

Careful selection of the correct component for the application's operating parameters and environment will go a long way toward extending the operating life of the Thyristor. Good design practice should limit the maximum continuous current through the main terminals to 75% of the component rating. Other ways to ensure long life for a power discrete semiconductor are proper heat sinking and selection of voltage ratings for worst case conditions. Overheating, overvoltage (including dv/dt), and surge currents are the main killers of semiconductors. Correct mounting, soldering, and forming of the leads also help protect against component damage.

Environmental Specifications

Test	Specifications and Conditions
AC Blocking	MIL-STD-750, M-1040, Cond A Applied Peak AC voltage @ 125°C for 1008 hours
Temperature Cycling	MIL-STD-750, M-1051, 100 cycles; -40°C to +150°C, 15-min dwell-time
Temperature/Humidity	EIA/JEDEC, JESD22-A101 1008 hours; 320V - DC: 85°C; 85% rel humidity
High Temp Storage	MIL-STD-750, M-1031, 1008 hours; 150°C
Low-Temp Storage	1008 hours; -40°C
Resistance to Solder Heat	MIL-STD-750 Method 2031
Solderability	ANSI/J-STD-002, category 3 Test A
Lead Bend	MIL-STD-750, M-2036 Cond E

© 2021 Littelfuse, Inc.
Specifications are subject to change without notice.
Revised: GD. 05/06/21

QJxx10xHx and QJxx10xx Series

10 A High Temperature Alternistor and Standard (High Communication) Triacs

Dimensions - TO-220AB (R-Package) - Non-Isolated Mounting Tab Common with Center Lead

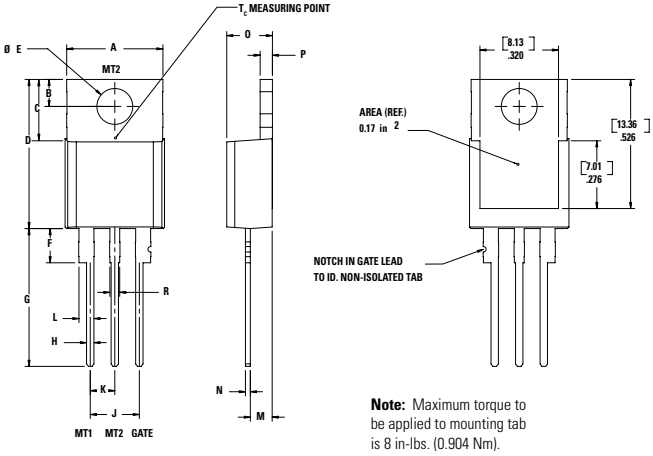

Note: Maximum torque to be applied to mounting tab is 8 in-lbs. (0.904 Nm).

Dimension	Milimeters		Inches	
	Min	Max	Min	Max
A	0.380	0.420	9.65	10.67
B	0.105	0.115	2.67	2.92
C	0.230	0.250	5.84	6.35
D	0.590	0.620	14.99	15.75
E	0.142	0.147	3.61	3.73
F	0.110	0.130	2.79	3.30
G	0.540	0.575	13.72	14.61
H	0.025	0.035	0.64	0.89
J	0.195	0.205	4.95	5.21
K	0.095	0.105	2.41	2.67
L	0.060	0.075	1.52	1.91
M	0.085	0.095	2.16	2.41
N	0.018	0.024	0.46	0.61
O	0.178	0.188	4.52	4.78
P	0.045	0.060	1.14	1.52
R	0.038	0.048	0.97	1.22

Dimensions - TO-220AB (L-Package) - Isolated Mounting Tab

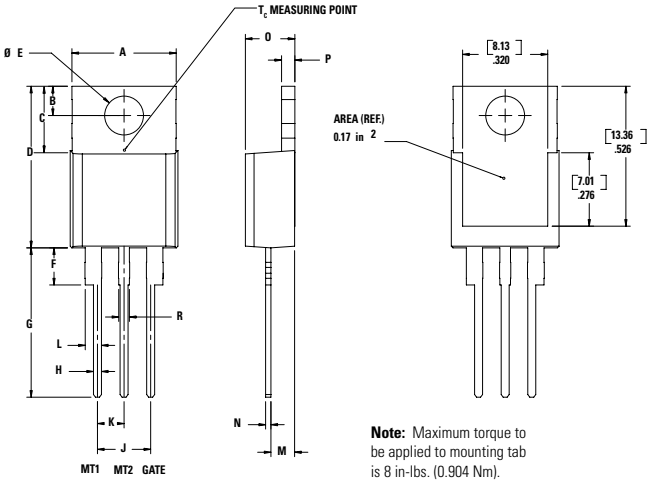

Note: Maximum torque to be applied to mounting tab is 8 in-lbs. (0.904 Nm).

Dimension	Milimeteres		Inches	
	Min	Max	Min	Max
A	0.380	0.420	9.65	10.67
B	0.105	0.115	2.67	2.92
C	0.230	0.250	5.84	6.35
D	0.590	0.620	14.99	15.75
E	0.142	0.147	3.61	3.73
F	0.110	0.130	2.79	3.30
G	0.540	0.575	13.72	14.61
H	0.025	0.035	0.64	0.89
J	0.195	0.205	4.95	5.21
K	0.095	0.105	2.41	2.67
L	0.060	0.075	1.52	1.91
M	0.085	0.095	2.16	2.41
N	0.018	0.024	0.46	0.61
O	0.178	0.188	4.52	4.78
P	0.045	0.060	1.14	1.52
R	0.038	0.048	0.97	1.22

© 2021 Littelfuse, Inc.
Specifications are subject to change without notice.
Revised: GD. 05/06/21

QJxx10xHx and QJxx10xx Series

10 A High Temperature Alternistor and Standard (High Communication) Triacs

Dimensions - TO-263AB (N-Package) - D2-PAK Surface Mount

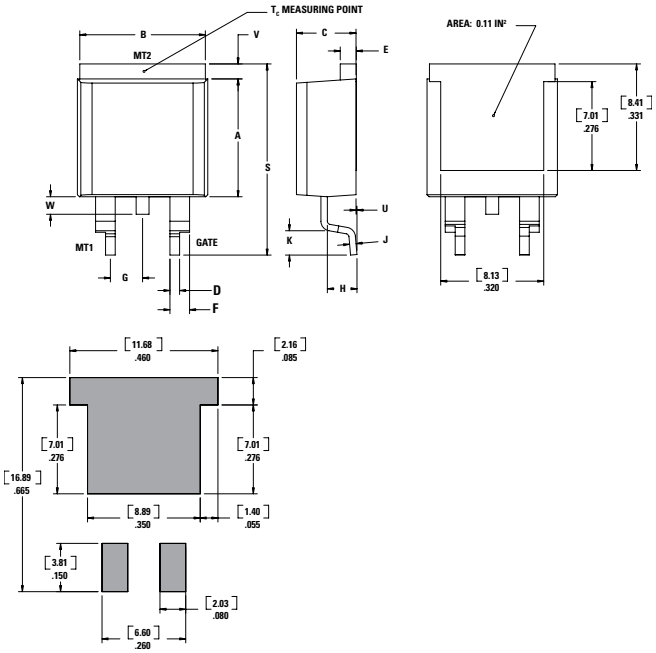

Dimension	Inches		Millimeters	
	Min	Max	Min	Max
A	0.360	0.370	9.14	9.40
B	0.380	0.420	9.65	10.67
C	0.178	0.188	4.52	4.78
D	0.025	0.035	0.64	0.89
E	0.045	0.060	1.14	1.52
F	0.060	0.075	1.52	1.91
G	0.095	0.105	2.41	2.67
H	0.092	0.102	2.34	2.59
J	0.018	0.024	0.46	0.61
K	0.090	0.110	2.29	2.79
S	0.590	0.625	14.99	15.88
V	0.035	0.045	0.89	1.14
U	0.002	0.010	0.05	0.25
W	0.040	0.070	1.02	1.78

Part Numbering System

QJ 80 10 L H4 56

DEVICE TYPE
QJ: High T_J TRIAC or Alternistor

VOLTAGE RATING
80: 800 V

CURRENT RATING
10: 10 A

PACKAGE TYPE
L: TO-220 Isolated
R: TO-220 Non-isolated
N: TO-263 (D^2Pak)

SENSITIVITY & TYPE
H3: 10 mA (QI, II, III)
H4: 35 mA (QI, II, III)
H5: 50 mA (QI, II, III)
4: 25 mA (QI, II, III)
50 mA (QIV)
5: 50 mA (QI, II, III)

LEAD FORM DIMENSIONS
xx: Lead Form Option

Part Marking System

TO-220 AB (L and R package)

TO-263 AB (N package)

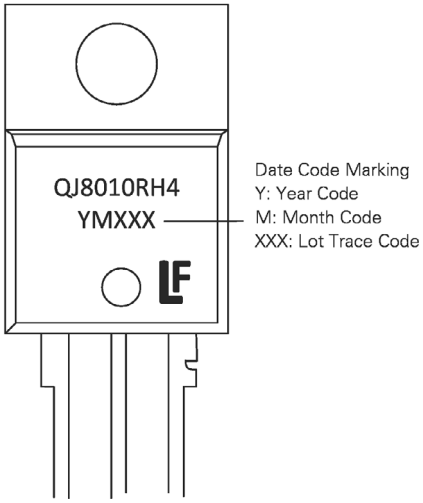

© 2021 Littelfuse, Inc.
Specifications are subject to change without notice.
Revised: GD. 05/06/21

QJxx10xHx and QJxx10xx Series

10 A High Temperature Alternistor and Standard (High Communication) Triacs

Product Selector

Part Number	Gate Sensitivity Quadrants		Type	Package
	I – II – III	IV		
QJ8010LH3	10 mA	-	Alternistor Triac	TO-220L
QJ8010RH3	10 mA	-	Alternistor Triac	TO-220R
QJ8010NH3	10 mA	-	Alternistor Triac	TO-263 D²PAK
QJ8010LH4	35 mA	-	Alternistor Triac	TO-220L
QJ8010RH4	35 mA	-	Alternistor Triac	TO-220R
QJ8010NH4	35 mA	-	Alternistor Triac	TO-263 D²PAK
QJ8010LH5	50 mA	-	Alternistor Triac	TO-220L
QJ8010RH5	50 mA	-	Alternistor Triac	TO-220R
QJ8010NH5	50 mA	-	Alternistor Triac	TO-263 D²PAK
QJ8010L4	25 mA	50 mA	Standard Triac	TO-220L
QJ8010R4	25 mA	50 mA	Standard Triac	TO-220R
QJ8010N4	25 mA	50 mA	Standard Triac	TO-263 D²PAK
QJ8010L5	50 mA	TYP 75 mA	Standard Triac	TO-220L
QJ8010R5	50 mA	TYP 75 mA	Standard Triac	TO-220R
QJ8010N5	50 mA	TYP 75 mA	Standard Triac	TO-263 D²PAK

Packing Options

Part Number	Marking	Weight	Packing Mode	M.O.Q
QJ8010RHyTP	QJ8010RHy	2.2 g	Tube Pack	1000 (50 per tube)
QJ8010LHyTP	QJ8010LHy	2.2 g	Tube Pack	1000 (50 per tube)
QJ8010NHyTP	QJ8010NHy	1.6 g	Tube Pack	1000 (50 per tube)
QJ8010NHyRP	QJ8010NHy	1.6 g	Embossed Carrier	500
QJ8010LyTP	QJ8010Ly	2.2 g	Tube Pack	1000 (50 per tube)
QJ8010RyTP	QJ8010Ry	2.2 g	Tube Pack	1000 (50 per tube)
QJ8010NyTP	QJ8010Ny	1.6 g	Tube Pack	1000 (50 per tube)
QJ8010NyRP	QJ8010Ny	1.6 g	Embossed Carrier	500

TO-263 Embossed Carrier Reel Pack (RP) Specifications

Meets all EIA-481-2 Standards

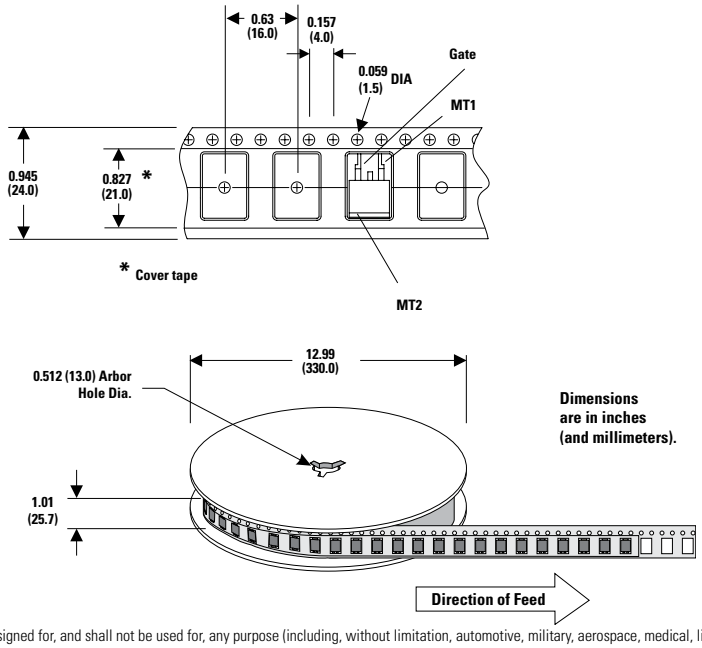

Disclaimer Notice - Littelfuse products are not designed for, and shall not be used for, any purpose (including, without limitation, automotive, military, aerospace, medical, life-saving, life-sustaining or nuclear facility applications, devices intended for surgical implant into the body, or any other application in which the failure or lack of desired operation of the product may result in personal injury, death, or property damage) other than those expressly forth in applicable Littelfuse product documentation. Littelfuse shall not be liable for any claims or damages arising out of products used in applications not expressly intended by Littelfuse as set forth in applicable Littelfuse documentation Read complete Disclaimer Notice at www.littelfuse.com/disclaimer-electronics

© 2021 Littelfuse, Inc.
Specifications are subject to change without notice.
Revised: GD. 05/06/21

Mouser Electronics

Authorized Distributor

Click to View Pricing, Inventory, Delivery & Lifecycle Information:

Littelfuse:

QJ8010LH5TP QJ8010NH4TP QJ8010NH5TP QJ8010RH5TP