Contents

	Page
General	
Contents	I
Certified Management Systems	II
Alphanumeric Index	III
Symbols and Terms	XVIII
Nomenclature	XX
IXYS	
New Packages	***0***
ISOPLUS™ family	***1***
ISOPLUS-SMPD™	2
ISOPLUS-DIL™	7
ISOPLUS i4-PAC™	8
IGBT Discretes	***11***
600V / 650V & 1200V XPT and NPT IGBTs	13
PT IGBTs, G-series, 3rd and 4th Generation	16
Fast PT IGBTs with SiC diode	19
High Voltage Types up to 4000 V	19
BiMOSFETs up to 3000 V	21
IGBT Modules	***22***
CBI Modules	22
Six-Packs	25
Multi Level, CBI and 6-Pack Solutions in *MiniPack2B* Housing	28
Multi Level, Half Bridge and Boost Modules in *SimBUS F* Housing	29
6-Pack and Half Bridge High Power Modules	30
Full Bridge & Solar Inverter Modules	31
Half Bridge and Buck / Boost Modules	32
Power MOSFETs	***33***
Trench MOSFETs / HiPerFETs (Fast Body Diode)	35
TrenchT2™ MOSFETs / HiPerFETs (FBD)	38
Polar™ MOSFETs / HiPerFETs (FBD)	41
PolarP2™ MOSFETs / HiPerFETs (FBD)	51
PolarP3™ HiPerFETs (FBD)	51
Legacy (Standard) MOSFETs	53
Extended FBSOA Linear Power MOSFETs	54
Depletion-Mode MOSFETs	55
PolarP™ & TrenchP™ P-channel MOSFETs	56
Q3-Class HiPerFET (FBD)	58
Very High Voltage MOSFETs (up to 4500 V)	59
CoolMOS™	60
Trench and MOSFET Modules	61
Power **F**actor **C**orrection Modules	64
Diodes	***65***
Schottky Gen² Diodes	66
Schottky Diodes	68
Silicon Carbide Schottky Diodes	69
HiPerDyn™ FREDs & Dual Ultrafast Diodes	69
HiPerFRED²™ & HiPerFRED™ Diodes	70
Sonic-FRDs™ Diodes	72
FRED Diodes	73
FRED & HiPerFRED™ Modules & Semifast Diodes	74
Rectifier & Avalanche Types	75
Studs: Rectifier & Avalanche Diodes & Thyristors	76
Rectifier Diode Modules	79, 139
Thyristors	
Discretes Phase Control Thyristors	77
Thyristor / Diode Modules	81, 138
Thyristor Modules	84, 137
Accessories & Design Information	88
Rectifier Bridges	
Rectifier Bridges with Fast Diodes	89
1~ Rectifier Bridges	90
1~ Rectifier Bridges, half controlled	91
3~ Rectifier Bridges	92
3~ Rectifier Bridges with Brake Unit	94
3~ Rectifier Bridges, half controlled	94
AC Controller / Triac	96
1~ / 3~ High Voltage Rectifiers	97
Braking Rectifier Assemblies	97
Protection Devices	
Break-over Diodes (BOD)	98
Fast Break-over Diodes (BOD)	99
IXYS ICD	
Gate Drivers & Power Relays	***101***
IXYS UK	
Application Notes & Technical Information	107
Rectifier Diodes	108
Fast Recovery Diodes	112
Soft Recovery Diodes	113
Extra Fast Recovery Diodes	116
High Power Sonic FRD's	117
Phase Control Thyristors	118
Medium Voltage Thyristors	124
Fast Turn-Off Thyristors	126
Distributed Gate Thyristors	128
Asymmetric and Pulse Thyristors	133
GTOs	134
Insulated Gate Bi-polar Transistors - *Press-Pack IGBTs*	135
Press-Pack IGBT Gate Drive Units	136
Dual Thyristor /Single Thyristor Modules	137
Thyristor / Diode Modules	138
Dual & Single Diode Modules	139
Water Cooled Diode & Thyristor Modules	140
Power Semiconductor Assemblies	141
Westack - Modular Solutions	143
WestackLITE - Modular Solutions	145
Power Semiconductor Accessories	147
Bar Clamps / Box Clamps	148
Coolers / Heatsinks	152
Snubber Capacitors	154
Power Semiconductor Chips @ DCB Ceramic Substrates	***156***
Outline Drawings	
IXYS UK	O-01
IXYS	O-30
Application Notes Highlights	O-56

Sales Representatives and Distributors: *See „Sales Offices“ at* **www.ixys.com**

Certified Management Systems

		Certificates
IXYS Corporation	ISO 9001:2008	
IXYS Integrated Circuits Division	ISO 9001:2008	
IXYS Semiconductor GmbH	ISO/TS 16949:2009 (includes ISO 9001:2008) ISO 14001:2009 OHSAS 18001:2007	
IXYS UK WESTCODE	ISO 9001:2008	

Alphanumeric Index

➢ New
○ Not for new design
✧ Under development

IXYS

C

CLA 5E1200UC 77
CLA 30E1200HB 77
CLA 30E1200PB 77
CLA 30E1200PC 77
➢ CLA 40P1200FC 10, 77
CLA 50E1200HB 77
CLA 50E1200TC 77
➢ CLA 60MT1200NHB 96
➢ CLA 60MT1200NHR 0, 96
➢ CLA 60MT1200NTZ 0, 96
✧ CLA 60MU1200LB 6
CLA 60PD1200NA 81
✧ CMA 50P1600LB 6
CLA 80E1200HF 77
CLA 100PD1200NA 82
CLA 110MB1200NA 96
➢ CLB 30I1200HB 77
CMA 30E1600PB 77
CMA 30E1600PN 77
➢ CMA 30E1600PZ 0, 77
CMA 30P1600FC 10, 77
➢ CMA 50E1600TZ 0, 77
CMA 50P1600FC 10, 77
➢ CMA 80E1600HB 77
CMA 80PD1600NA 81
➢ CNA 10E2500FB 10, 77
CS 19-08ho1 77
CS 19-08ho1S 77
CS 19-12ho1 77
CS 19-12ho1S 77
CS 20-12io1 77
CS 20-14io1 77
CS 20-16io1 77
CS 20-22moF1 10, 77
CS 20-25mo1F 10, 77
CS 20-25moT1 77
CS 22-08io1M 77
CS 22-12io1M 77
CS 23-08io2 76
CS 23-12io2 76
CS 23-16io2 76
CS 30-12io1 77
CS 30-14io1 77
CS 30-16io1 77
CS 35-08io4 76
CS 35-12io4 76
CS 35-14io4 76
CS 45-08io1 77
CS 45-12io1 77
CS 45-16io1 77
CS 45-16io1R 77
CS 60-12io1 77
CS 60-14io1 77
CS 60-16io1 77

D

✧ DCG 20B650LB 6
✧ DCG 20B1200LB 6
DFE 10I600PM 73
DH 20-18A 72
DH 40-18A 72
DH 60-14A 72
DH 60-16A 72
DH 60-18A 72
DH 2x60-18A 72
➢ DH 2x61-16A 72
DH 2x61-18A 72
DHG 5I600PA 72
DHG 5I600PM 72
DHG 10C600PB 72
DHG 10I600PA 72
DHG 10I600PM 72
DHG 10I1200PA 72
DHG 10I1200PM 72
DHG 10I1800PA 72
DHG 20C600PB 72
DHG 20C600QB 72
DHG 20C1200PB 72
DHG 20I600HA 72
DHG 20I600PA 72
DHG 20I1200HA 72
DHG 20I1200PA 72
DHG 30I600HA 72
DHG 30I600PA 72
DHG 30I1200HA 72
DHG 30IM600PC 72
DHG 40C600HB 72
DHG 40C600PB 72
DHG 40C1200HB 72
✧ DHG 50B1200LB 6
DHG 50X600NA 72
DHG 50X1200NA 72
DHG 60C600HB 72
DHG 60I600HA 72
DHG 60I1200HA 72
➢ DHG 60U1200LB 6, 89
DHG 100X600NA 72
DHG 100X1200NA 72
DHH 55-36N1F 10, 69, 72
DLA 5P800UC 75
DLA 10IM800UC 75
DLA 20IM800PC 75
DLA 40IM800PC 75
DLA 60I1200HA 75
DLA 100B1200LB 6, 64, 91
DMA 10I1600PA 75
➢ DMA 10P1600PZ 0, 75
DMA 30E1800HA 75
➢ DMA 90U1800LB 6, 93
DMA 150E1600NA 75
DMA 150YA1600NA 94
DMA 150YC1600NA 94
DNA 30E2200FE 75
DNA 30E2200PA 75
➢ DNA 30E2200PZ 0, 75
➢ DNA 30EM2200PZ 0, 75
➢ DNA 30ER2200IY 75
➢ DNA 90YA2200NA 94
➢ DNA 90YC2200NA 94
DPF 30I300PA 70
DPF 60C200HB 70
DPF 60C200HJ 70
DPF 60C300HB 70
➢ DPF 60I200HA 70
DPF 60IM400HB 70
➢ DPF 60XA400NA 70
DPF 80C200HB 70
➢ DPF 120X200NA 70
➢ DPF 120X400NA 70
DPF 240X200NA 70
DPF 240X400NA 70
➢ DPF 400C400NB 70
DPG 10I200PA 70
DPG 10I200PM 70
DPG 10I300PA 70
DPG 10I400PA 70
DPG 10I400PM 70
DPG 10IM300UC 70
DPG 10P400PJ 69, 70
DPG 15I200PA 70
DPG 15I300PA 70
DPG 15I400PM 70
DPG 20C200PB 70
DPG 20C200PN 70
DPG 20C300PB 70
DPG 20C300PN 70
DPG 20C400PB 70
DPG 20C400PC 70
DPG 20C400PN 70
DPG 30C200HB 70
DPG 30C200PB 70
DPG 30C200PC 70
DPG 30C300HB 70
DPG 30C300PB 70
DPG 30C300PC 70
DPG 30C400HB 70
DPG 30C400PB 70
DPG 30I300HA 70
DPG 30I300PA 70
DPG 30I400HA 70
DPG 30IM300PC 70
DPG 30P300PJ 69, 70
➢ DPG 60B600LB 6, 71, 89
DPG 60C200HB 70
DPG 60C200QB 70
DPG 60C300HB 70
DPG 60C300HJ 70
DPG 60C300PC 70
DPG 60C300QB 70
DPG 60C400HB 70
DPG 60C400QB 70
DPG 60I300HA 70
DPG 60I400HA 70
DPG 60IM300PC 70
DPG 60IM400QB 70
DPG 80C300HB 70
DPG 80C400HB 70
DPG 120C300QB 70
DPH 30IS600HI 69, 70
DS 2-08A 76
DS 2-12A 76
DS 17-08A 76
DS 17-12A 76
DS 35-08A 76
DS 35-12A 76
DS 75-08B 76
DS 75-12B 76
DSA 1-12D 75
DSA 1-16D 75
DSA 1-18D 75
DSA 2-12A 76
DSA 2-16A 76
DSA 2-18A 76
DSA 9-12F 76
DSA 9-16F 76
DSA 9-18F 76
DSA 10C150PB 67
DSA 10I100PM 66
DSA 15I45PA 66
DSA 15IM45IB 66
DSA 15IM200UC 67
DSA 17-12A 76
DSA 17-16A 76
DSA 17-18A 76
DSA 20C45PB 66
DSA 20C60PN 66
DSA 20C100PB 66
DSA 20C100PN 66
DSA 20C150PB 67
DSA 20C150PN 67
DSA 30C45HB 66
DSA 30C45PB 66
➢ DSA 30C45PC 66
DSA 30C60PB 66
DSA 30C100HB 66
DSA 30C100PB 66
DSA 30C100PN 66
DSA 30C100QB 66
DSA 30C150HB 67
DSA 30C150PB 67
DSA 30C200IB 67
DSA 30C200PB 67
DSA 30I100PA 66
DSA 30I150PA 67
DSA 35-12A 76
DSA 35-16A 76
DSA 35-18A 76
DSA 50C100HB 66
DSA 50C100QB 66
DSA 50C150HB 67
DSA 60C45HB 66
DSA 60C45PB 66
DSA 60C60HB 66
DSA 60C60PB 66
DSA 60C100PB 66
DSA 60C150PB 67
DSA 70C100HB 66
DSA 70C150HB 67
DSA 70C200HB 67
DSA 75-12B 76
DSA 75-16B 76
DSA 75-18B 76
DSA 80C45HB 66
DSA 80C100PB 66
DSA 90C200HB 67
➢ DSA 90C200HR 0, 67
DSA 120C150QB 67
DSA 120X150LB 6, 67
➢ DSA 120X200LB 6, 67
DSA 240X150NA 67
➢ DSA 240X200LB 6, 67
DSA 240X200NA 67
DSA 300I45NA 66
DSA 300I100NA 66
DSA 300I200NA 67
➢ DSA 320A100NB 66
➢ DSA 600A150NB 67
DSAI 17-12A 76
DSAI 17-16A 76
DSAI 17-18A 76
DSAI 35-12A 76
DSAI 35-16A 76
DSAI 35-18A 76
DSAI 75-12B 76
DSAI 75-16B 76
DSAI 75-18B 76
DSB 10I45PM 66
➢ DSB 10P60PN 66
DSB 15IM45IB 66
DSB 20C60PN 66
DSB 20I15PA 66
DSB 30C30PB 66
DSB 30C45HB 66
DSB 30C45PB 66
DSB 30C60PB 66
DSB 40C15PB 66
DSB 60C30HB 66
DSB 60C30PB 66
DSB 60C45HB 66
DSB 60C45PB 66
DSB 60C60HB 66
DSB 60C60PB 66
DSB 80C45HB 66
DSDI 60-14A 74
DSDI 60-16A 74
DSDI 60-18A 74
DSEC 16-06A 71
DSEC 16-06AC 71
DSEC 16-12A 71
DSEC 16-12AS 71
DSEC 29-06AC 71
DSEC 30-06A 71
DSEC 30-06B 71
DSEC 30-12A 71
DSEC 59-06BC 71
DSEC 60-06A 71
DSEC 60-06B 71
DSEC 60-12A 71
DSEC 120-12AK 71
DSEC 240-04A 71
DSEC 240-06A 71
DSEE 15-12CC 69
DSEE 29-12CC 69
DSEE 30-12A 69
DSEE 55-24N1F 10, 69
DSEI 8-06A 73
DSEI 8-06AS 73
DSEI 12-06A 73
➢ DSEI 12-06AS 73
DSEI 12-10A 73
DSEI 12-12A 73
➢ DSEI 12-12AZ 73
DSEI 19-06AS 73
DSEI 20-12A 73
DSEI 2x30-04C 73
DSEI 30-06A 73
DSEI 2x30-06C 73
DSEI 30-10A 73
DSEI 30-10AR 73
DSEI 2x30-10B 73
DSEI 30-12A 73
DSEI 2x30-12B 73
DSEI 2x31-04C 73
DSEI 2x31-06C 73
DSEI 2x31-06P 73
DSEI 2x31-10B 73
DSEI 2x31-12B 73
DSEI 2x31-12P 73
DSEI 36-06AS 73
DSEI 60-02A 73
➢ DSEI 2x60-04C 73
DSEI 60-06A 73
DSEI 60-10A 73
DSEI 60-12A 73

Alphanumeric Index

➢ New
○ Not for new design
✧ Under development

DSEI 2x61-02A 73
DSEI 2x61-04C 73
DSEI 2x61-06C 73
DSEI 2x61-06P 73
DSEI 2x61-10B 73
DSEI 2x61-12B 73
DSEI 2x61-12P 73
DSEI 2x101-06A 73
DSEI 2x101-06P 73
DSEI 2x101-12A 73
DSEI 2x101-12P 73
DSEI 120-06A 73
DSEI 120-12A 73
DSEI 2x121-02A 73
DSEI 2x161-02P 73
DSEI 2x161-06P 73
DSEI 2x161-12P 73
DSEK 60-02A 73
DSEK 60-02AR 73
DSEK 60-06A 73
DSEK 60-12A 73
DSEP 6-06AS 71
DSEP 6-06BS 71
DSEP 8-06A 71
DSEP 8-06B 71
DSEP 8-12A 71
DSEP 12-12A 71
➢ DSEP 12-12AZ 71
DSEP 12-12B 71
➢ DSEP 12-12BZ 71
DSEP 15-06A 71
➢ DSEP 15-06AS 71
DSEP 15-06B 71
➢ DSEP 15-06BS 71
DSEP 15-12CR 69
DSEP 2x25-12C 69
DSEP 29-06A 71
DSEP 29-06AS 71
DSEP 29-06B 71
DSEP 29-12A 71
DSEP 30-06A 71
DSEP 30-06B 71
DSEP 30-06BR 71
DSEP 30-12A 71
DSEP 30-12AR 71
DSEP 30-12CR 69
DSEP 2x31-03A 71
DSEP 2x31-06A 71
DSEP 2x31-06B 71
DSEP 2x31-12A 71
DSEP 40-03AS 71
DSEP 60-06A 71
DSEP 60-06AT 71
DSEP 60-12A 71
DSEP 2x60-12A 71
DSEP 60-12AR 71
DSEP 2x61-03A 71
DSEP 2x61-06A 71
DSEP 2x61-12A 71
DSEP 2x91-03A 71
DSEP 2x91-06A 71
DSEP 2x101-04A 71
DSI 17-08A 76
DSI 17-12A 76
DSI 30-08A 75
DSI 30-08AC 75
DSI 30-08AS 75
DSI 30-12A 75
DSI 30-12AS 75
DSI 30-16A 75
DSI 30-16AS 75
DSI 35-08A 76
DSI 35-12A 76
DSI 45-08A 75
DSI 45-12A 75
DSI 45-16A 75
DSI 45-16AR 75
DSI 2x55-12A 75
DSI 2x55-16A 75
DSI 75-08B 76
DSI 75-12B 76
DSIK 45-16AR 75
DSP 8-08A 75
DSP 8-08AS 75
DSP 8-08S 75
DSP 8-12A 75
DSP 8-12AC 75
DSP 8-12AS 75
DSP 8-12S 75
DSP 25-12A 75
DSP 25-12AT 75
DSP 25-16A 75
DSP 25-16AR 75
DSP 25-16AT 75
DSP 45-12A 75
➢ DSP 45-12AZ 75
DSP 45-16A 75
DSP 45-16AR 75
➢ DSP 45-16AZ 75
DSS 6-0025BS 68
DSS 6-0045AS 68
DSS 6-015AS 69
DSS 10-0045B 68
DSS 10-006A 68
DSS 10-01A 68
DSS 10-01AS 68
DSS 16-0045A 68
DSS 16-0045AS 68
DSS 16-01A 68
DSS 16-01AS 68
DSS 17-06CR 69
DSS 20-0015B 68
DSS 20-01AC 68
DSS 25-0025B 68
DSS 25-0045A 68
DSS 40-0008D 68
DSS 2x41-01A 68
DSS 60-0045B 68
DSS 2x61-0045A 68
DSS 2x61-01A 68
DSS 2x81-0045B 68
DSS 2x101-015A 69
DSS 2x101-02A 69
DSS 2x111-008A 68
DSS 2x121-0045B 68
DSS 2x160-0045A 68
DSS 2x160-01A 68
DSS 2x200-0008D 68
DSSK 10-018A 69
DSSK 16-01A 68
DSSK 16-01AS 68
DSSK 18-0025BS 68
DSSK 20-0045B 68
DSSK 20-015A 69
DSSK 28-0045BS 68
DSSK 28-006BS 68
DSSK 28-01AS 68
DSSK 30-01A 68
DSSK 30-018A 69
DSSK 38-0025B 68
DSSK 38-0025BS 68
DSSK 40-0015B 68
DSSK 40-006B 68
DSSK 40-008B 68
DSSK 48-0025B 68
DSSK 48-003B 68
DSSK 48-003BS 68
DSSK 50-0025B 68
DSSK 50-01A 68
DSSK 50-015A 69
DSSK 60-0045A 68
DSSK 60-0045B 68
DSSK 60-015A 69
DSSK 60-015AR 69
DSSK 60-02A 69
DSSK 60-02AR 69
DSSK 70-0015B 68
DSSK 70-003B 68
DSSK 70-008A 68
DSSK 70-008AR 68
DSSK 80-0008D 68
DSSK 80-0025B 68
DSSK 80-003B 68
DSSK 80-0045B 68
DSSK 80-006B 68
DSSK 80-006BR 68
DSSS 30-01AR 68
DSSS 35-008AR 68

F
FBE 22-06N1 10, 89
FBO 16-12N 10, 64, 90
FBO 40-12N 10, 64, 90
FBS 10-06SC 10, 69, 89
FBS 10-12SC 10, 69, 89
FBS 16-06SC 10, 69, 89
FDM 15-06KC5 9, 60, 63
FDM 47-06KC5 9, 60, 63
FID 60-06D 9, 64
FII 30-06D 9
FII 40-06D 9
FMD 15-06KC5 9, 60, 63, 64
○ FMD 21-05QC 9, 63, 64
FMD 40-06KC 9, 60, 63, 64
FMD 47-06KC5 9, 60, 63, 64
➢ FMM 22-05PF 9, 62
➢ FMM 22-06PF 9, 62
➢ FMM 50-025TF 9, 61
➢ FMM 60-02TF 9, 61
FMM 75-01F 9, 62
FMM 150-0075X2F 9, 61
➢ FMP 26-02P 9, 62
➢ FMP 36-015P 9, 62
➢ FMP 76-010T 9, 61
FUE 30-12N1 10, 89
FUO 22-12N 10, 92
FUO 22-16N 10, 92
FUO 50-16N 10, 92
FUS 45-0045B 10, 68, 89

G
GBO 25-12NO1 90
GBO 25-16NO1 90
GMM 3x60-015X2 7, 61
GUO 40-08NO1 92
GUO 40-12NO1 92
GUO 40-16NO1 92

I
IX2127 104
➢ IX3120 104
IX4423 103
IX4424 103
IX4425 103
IX4426 103
IX4427 103
IX4428 103
➢ IXA 4IF1200TZ 0, 15
IXA 4IF1200UC 15
IXA 12IF1200HB 15
IXA 12IF1200PB 15
➢ IXA 12IF1200PZ 0, 15
IXA 12IF1200TC 15
IXA 17IF1200HJ 15
IXA 20I1200PB 15
➢ IXA 20I1200PZ 0, 15
IXA 20IF1200HB 15
IXA 20PG1200DHGLB 5
➢ IXA 20PT1200LB 5
IXA 20RG1200DHGLB 5
IXA 27IF1200HJ 15
➢ IXA 30PG1200DHGLB 5
➢ IXA 30RG1200DHGLB 5
IXA 33IF1200HB 15
➢ IXA 35PF650LB 5
IXA 37IF1200HJ 15
➢ IXA 40I4000KN 20
IXA 40PG1200DHGLB 5
IXA 40RG1200DHGLB 5
IXA 45IF1200HB 15
IXA 55I1200HJ 15
➢ IXA 55PF650LB 5
✧ IXA 60IF1200DHGLB 5
IXA 60IF1200NA 15
IXA 70I1200NA 15
➢ IXA 70R1200NA 15
➢ IXA 80PF650LB 5
✧ IXA 85IF1200DHGLB 5
✧ IXA 90IF650NA 15
✧ IXA 110XF650ALB 5
✧ IXA 220I650NA 15
✧ IXB 80IF600NA 15
✧ IXB 200I600NA 15
➢ IXBA 12N300HV 0, 21
IXBF 9N160G 9, 21
IXBF 12N300 9, 21
IXBF 20N300 9, 21
IXBF 32N300 9, 21
IXBF 40N160 9, 21
IXBF 42N300 9, 21
IXBF 55N300 9, 21
IXBH 2N250 21
IXBH 5N160G 21
IXBH 6N170 21
IXBH 9N160G 21
IXBH 10N170 21
IXBH 12N300 21
IXBH 16N170 21
IXBH 16N170A 21
IXBH 20N300 21
IXBH 24N170 21
IXBH 32N300 21
IXBH 40N160 21
IXBH 42N170 21
IXBH 42N170A 21
IXBK 55N300 21
IXBK 64N250 21
IXBK 75N170 21
IXBK 75N170A 21
IXBL 64N250 21
IXBN 42N170A 21
IXBN 75N170 21
IXBN 75N170A 21
IXBOD 1-06 98
IXBOD 1-07 98
IXBOD 1-08 98
IXBOD 1-09 98
IXBOD 1-10 98
IXBOD 1-12R 98
IXBOD 1-12RD 98
IXBOD 1-13R 98
IXBOD 1-13RD 98
IXBOD 1-14R 98
IXBOD 1-14RD 98
IXBOD 1-15R 98
IXBOD 1-15RD 98
IXBOD 1-16R 98
IXBOD 1-16RD 98
IXBOD 1-17R 98
IXBOD 1-17RD 98
IXBOD 1-18R 98
IXBOD 1-18RD 98
IXBOD 1-19R 98
IXBOD 1-19RD 98
IXBOD 1-20R 98
IXBOD 1-20RD 98
IXBOD 1-21R 98
IXBOD 1-21RD 98
IXBOD 1-22R 98
IXBOD 1-22RD 98
IXBOD 1-23R 98
IXBOD 1-23RD 98
IXBOD 1-24R 98
IXBOD 1-24RD 98
IXBOD 1-25R 98
IXBOD 1-25RD 98
IXBOD 1-26R 98
IXBOD 1-26RD 98
IXBOD 1-28R 98
IXBOD 1-28RD 98
IXBOD 1-30R 98
IXBOD 1-30RD 98
IXBOD 1-32R 98
IXBOD 1-32RD 98
IXBOD 1-34R 98
IXBOD 1-36R 98
IXBOD 1-38R 98
IXBOD 1-40R 98
IXBOD 1-42R 98
IXBOD 2-01 99
IXBOD 2-02 99
IXBOD 2-03 99
IXBOD 2-04 99
IXBOD 2-05 99
IXBOD 2-06 99
IXBOD 2-07 99
IXBOD 2-08 99
IXBOD 2-09 99
IXBOD 2-10 99

Alphanumeric Index

➢ New
○ Not for new design
✧ Under development

IXBOD 2-11 99
IXBOD 2-12 99
IXBOD 2-13 99
IXBOD 2-14 99
IXBOD 2-15R 99
IXBOD 2-15RD 99
IXBOD 2-16R 99
IXBOD 2-16RD 99
IXBOD 2-17R 99
IXBOD 2-17RD 99
IXBOD 2-18R 99
IXBOD 2-18RD 99
IXBOD 2-19R 99
IXBOD 2-19RD 99
IXBOD 2-20R 99
IXBOD 2-20RD 99
IXBOD 2-21R 99
IXBOD 2-21RD 99
IXBOD 2-22R 99
IXBOD 2-22RD 99
IXBOD 2-23R 99
IXBOD 2-23RD 99
IXBOD 2-24R 99
IXBOD 2-24RD 99
IXBOD 2-25R 99
IXBOD 2-25RD 99
IXBOD 2-26R 99
IXBOD 2-26RD 99
IXBOD 2-27R 99
IXBOD 2-27RD 99
IXBOD 2-28R 99
IXBOD 2-28RD 99
IXBOD 2-29R 100
IXBOD 2-29RD 100
IXBOD 2-30R 100
IXBOD 2-30RD 100
IXBOD 2-31R 100
IXBOD 2-31RD 100
IXBOD 2-32R 100
IXBOD 2-32RD 100
IXBOD 2-33R 100
IXBOD 2-33RD 100
IXBOD 2-34R 100
IXBOD 2-34RD 100
IXBOD 2-35R 100
IXBOD 2-35RD 100
IXBOD 2-36R 100
IXBOD 2-36RD 100
IXBOD 2-37R 100
IXBOD 2-37RD 100
IXBOD 2-38R 100
IXBOD 2-38RD 100
IXBOD 2-39R 100
IXBOD 2-39RD 100
IXBOD 2-40R 100
IXBOD 2-40RD 100
IXBOD 2-41R 100
IXBOD 2-41RD 100
IXBOD 2-42R 100
IXBOD 2-42RD 100
IXBOD 2-43R 100
IXBOD 2-44R 100
IXBOD 2-45R 100
IXBOD 2-46R 100
IXBOD 2-47R 100
IXBOD 2-48R 100
IXBOD 2-49R 100
IXBOD 2-50R 100
IXBOD 2-51R 100
IXBOD 2-52R 100
IXBOD 2-53R 100
IXBOD 2-54R 100
IXBOD 2-55R 100
IXBOD 2-56R 100
IXBP 5N160G 21
IXBR 42N170 21
IXBT 2N250 21
IXBT 6N170 21
IXBT 10N170 21
IXBT 12N300 21
➢ IXBT 12N300HV 0, 21
IXBT 16N170 21
IXBT 16N170A 21
IXBT 20N300 21
➢ IXBT 20N300HV 0, 21
IXBT 24N170 21
IXBT 32N300 21
IXBT 42N170 21
IXBT 42N170A 21
➢ IXBT 42N300HV 0, 21
IXBX 25N250 21
IXBX 55N300 21
IXBX 64N250 21
IXBX 75N170 21
IXBX 75N170A 21
IXCH 36N250 21
IXCK 36N250 21
IXD_602 103
IXD_604 103
IXD_609 103
IXD_614 103
IXD_630 103
IXD_630M 103
✧ IXD 75IF650NA 15
✧ IXD 80IF650LB 5
✧ IXD 110IF650LB 5
IXDA 20N120AS 15
IXDH 20N120 15
IXDH 20N120D1 15
○ IXDH 30N120 15
○ IXDH 30N120D1 15
○ IXDH 35N60B 15
IXDH 35N60BD1 15
IXDN 55N120D1 15
IXDN 75N120 15
IXDP 20N60B 15
IXDP 20N60BD1 15
○ IXDP 35N60B 15
○ IXDR 30N120 15
○ IXDR 30N120D1 15
○ IXDR 35N60BD1 15
✧ IXE 50PF600LB 5
IXEL 40N400 20
IXFA 4N60P3 52
IXFA 4N100P 49
IXFA 5N50P3 51
IXFA 5N100P 49
IXFA 6N120P 49
IXFA 7N60P3 52
IXFA 7N80P 47
IXFA 7N100P 49
IXFA 8N50P3 51
IXFA 10N60P 47
IXFA 10N80P 48
IXFA 12N50P 46
IXFA 14N60P 47
IXFA 14N60P3 52
IXFA 16N50P 46
IXFA 16N50P3 51
IXFA 16N60P3 52
IXFA 20N50P3 52
IXFA 22N60P3 52
IXFA 26N50P3 52
IXFA 76N15T2 40
IXFA 102N15T 37
IXFA 110N15T2 40
IXFA 130N10T 37
IXFA 130N10T2 40
IXFA 180N10T2 40
IXFA 230N075T2 40
IXFA 230N075T2-7 40
IXFB 30N120P 50
IXFB 40N110P 49
IXFB 44N100P 49
IXFB 44N100Q3 58
IXFB 52N90P 49
IXFB 60N80P 48
IXFB 62N80Q3 58
IXFB 82N60P 47
IXFB 82N60Q3 58
IXFB 100N50P 47
IXFB 100N50Q3 58
IXFB 110N60P3 52
IXFB 120N50P2 51
IXFB 132N50P3 52
IXFB 170N30P 46
IXFB 210N20P 45
IXFB 210N30P3 51
IXFB 300N10P 45
IXFC 10N80P 47
IXFC 12N80P 47
IXFC 14N60P 47
IXFC 14N80P 48
IXFC 16N50P 46
IXFC 16N80P 48
IXFC 20N80P 48
IXFC 22N60P 47
IXFC 26N50P 46
IXFC 30N60P 47
IXFC 36N50P 46
IXFC 52N30P 45
IXFC 74N20P 45
IXFC 96N15P 45
IXFC 110N10P 45
IXFH 5N100P 49
IXFH 6N120P 49
IXFH 7N100P 49
IXFH 10N80P 48
IXFH 10N100P 49
IXFH 12N80P 48
IXFH 12N90P 48
IXFH 12N100P 49
IXFH 12N120P 49
IXFH 14N60P 47
IXFH 14N60P3 52
IXFH 14N80P 48
IXFH 15N100P 49
IXFH 15N100Q3 58
IXFH 16N50P 46
IXFH 16N50P3 51
IXFH 16N60P3 52
IXFH 16N80P 48
IXFH 16N120P 49
IXFH 18N60P 47
IXFH 18N90P 48
IXFH 18N100Q3 58
IXFH 20N50P3 52
IXFH 20N80P 48
IXFH 20N100P 49
IXFH 22N50P 46
IXFH 22N60P 47
IXFH 22N60P3 52
IXFH 24N80P 48
IXFH 24N90P 48
IXFH 26N50P 46
IXFH 26N50P3 52
IXFH 26N60P 47
IXFH 28N60P3 52
IXFH 30N50P 46
IXFH 30N50Q3 58
IXFH 30N60P 47
IXFH 34N50P3 52
IXFH 36N50P 46
IXFH 36N60P 47
IXFH 42N50P2 51
IXFH 42N60P3 52
IXFH 44N50P 46
IXFH 44N50Q3 58
IXFH 50N30Q3 58
IXFH 50N50P3 52
IXFH 50N60P3 52
IXFH 52N30P 45
IXFH 52N50P2 51
IXFH 60N50P3 52
IXFH 69N30P 45
IXFH 70N20Q3 58
IXFH 70N30Q3 58
IXFH 74N20P 45
IXFH 86N30T 37
IXFH 88N30P 46
IXFH 94N30P3 51
IXFH 94N30T 37
IXFH 96N15P 45
IXFH 96N20P 45
IXFH 100N25P 45
IXFH 102N15T 37
IXFH 110N10P 45
IXFH 110N15T2 40
IXFH 110N25T 37
IXFH 120N15P 45
IXFH 120N20P 45
IXFH 120N25T 37
IXFH 140N10P 45
IXFH 150N15P 45
IXFH 150N17T2 40
IXFH 150N20T 37
IXFH 160N15T 37
IXFH 160N15T2 40
IXFH 170N10P 45
IXFH 230N075T2 40
IXFH 230N10T 37
IXFH 320N10T2 40
IXFH 340N075T2 40
IXFH 400N075T2 40
IXFK 20N120P 50
IXFK 24N80P 48
IXFK 24N100Q3 58
IXFK 26N100P 49
IXFK 26N120P 50
IXFK 32N80P 48
IXFK 32N80Q3 58
IXFK 32N90P 48
IXFK 32N100P 49
IXFK 32N100Q3 58
IXFK 36N60P 47
IXFK 40N90P 49
IXFK 44N50P 46
IXFK 44N80P 48
IXFK 44N80Q3 58
IXFK 48N60P 47
IXFK 48N60Q3 58
IXFK 64N50P 46
IXFK 64N50Q3 58
IXFK 64N60P 47
IXFK 64N60P3 52
IXFK 64N60Q3 58
IXFK 74N50P2 51
IXFK 78N50P3 52
IXFK 80N50P 47
IXFK 80N50Q3 58
IXFK 80N60P3 52
IXFK 88N30P 46
IXFK 94N50P2 51
IXFK 98N50P3 52
IXFK 102N30P 46
IXFK 120N20P 45
IXFK 120N25P 45
IXFK 120N30P3 51
IXFK 120N30T 37
IXFK 140N20P 45
IXFK 140N25T 37
IXFK 140N30P 46
IXFK 150N15P 45
IXFK 150N30P3 51
IXFK 160N30T 37
IXFK 170N10P 45
IXFK 170N20P 45
IXFK 170N20T 37
IXFK 180N15P 45
IXFK 180N25T 37
IXFK 200N10P 45
IXFK 220N15P 45
IXFK 220N17T2 40
IXFK 230N20T 37
IXFK 240N15T2 40
IXFK 250N10P 45
IXFK 320N17T2 40
IXFK 360N10T 37
IXFK 360N15T2 40
IXFK 420N10T 37
IXFK 520N075T2 40
IXFL 30N120P 50
IXFL 32N120P 50
IXFL 36N110P 49
IXFL 38N100P 49
IXFL 40N110P 49
IXFL 44N100P 49
IXFL 60N80P 48
IXFL 82N60P 47
IXFL 100N50P 47
IXFL 132N50P3 52
IXFL 210N30P3 51
IXFN 20N120P 50
IXFN 26N100P 49
IXFN 26N120P 50
IXFN 30N120P 50

Alphanumeric Index

➢ New
○ Not for new design
✧ Under development

IXFN 32N80P 48
IXFN 32N100P 49
IXFN 32N100Q3 58
IXFN 32N120P 50
IXFN 38N100P 49
IXFN 40N90P 49
IXFN 40N110P 49
IXFN 44N80P 48
IXFN 44N80Q3 58
IXFN 44N100P 49
IXFN 44N100Q3 58
IXFN 48N60P 47
IXFN 52N90P 49
IXFN 56N90P 49
IXFN 60N80P 48
IXFN 62N80Q3 58
IXFN 64N50P 46
IXFN 64N60P 47
IXFN 80N50P 46
IXFN 80N50Q3 58
IXFN 82N60P 47
IXFN 82N60Q3 58
IXFN 100N50P 47
IXFN 100N50Q3 58
IXFN 102N30P 46
IXFN 110N60P3 52
IXFN 132N50P3 52
IXFN 140N20P 45
IXFN 140N25T 37
IXFN 140N30P 46
IXFN 160N30T 37
IXFN 170N30P 46
IXFN 180N15P 45
IXFN 180N25T 37
IXFN 200N10P 45
IXFN 210N20P 45
IXFN 210N30P3 51
IXFN 230N20T 37
IXFN 240N15T2 40
IXFN 300N10P 45
IXFN 320N17T2 40
IXFN 360N10T 37
IXFN 360N15T2 40
IXFN 420N10T 37
IXFN 520N075T2 40
IXFP 3N50PM 46
IXFP 4N60P3 52
IXFP 4N100P 49
IXFP 4N100PM 49
IXFP 5N50P3 51
IXFP 5N50PM 46
IXFP 05N100M 49
IXFP 5N100P 49
IXFP 6N120P 49
IXFP 7N60P3 52
IXFP 7N80P 47
IXFP 7N80PM 47
IXFP 7N100P 49
IXFP 8N50P3 51
IXFP 8N50PM 46
IXFP 10N60P 47
IXFP 10N80P 48
IXFP 12N50P 46
IXFP 12N50PM 46
IXFP 14N60P 47
IXFP 14N60P3 52
IXFP 16N50P 46
IXFP 16N50P3 52
IXFP 16N60P3 52
IXFP 20N50P3 52
IXFP 20N50P3M 51
IXFP 22N60P3 52
IXFP 26N50P3 52
IXFP 76N15T2 40
IXFP 102N15T 37
IXFP 110N15T2 40
IXFP 130N10T 37
IXFP 130N10T2 40
IXFP 180N10T2 40
IXFP 230N075T2 40
IXFQ 10N80P 48
IXFQ 12N80P 48
IXFQ 14N80P 48
IXFQ 20N50P3 52
IXFQ 22N60P3 52
IXFQ 24N50P2 51
IXFQ 26N50P3 52
IXFQ 28N60P3 52
IXFQ 34N50P3 52
IXFQ 50N50P3 52
IXFQ 50N60P3 52
IXFQ 60N50P3 52
IXFQ 94N30P3 51
IXFR 15N100Q3 58
IXFR 16N120P 49
IXFR 18N90P 48
IXFR 20N80P 48
IXFR 20N100P 49
IXFR 20N120P 49
IXFR 24N80P 48
IXFR 24N90P 48
IXFR 24N100Q3 58
IXFR 26N100P 49
IXFR 26N120P 49
IXFR 30N60P 47
IXFR 32N80P 48
IXFR 32N80Q3 58
IXFR 32N100P 49
IXFR 32N100Q3 58
IXFR 36N50P 46
IXFR 36N60P 47
IXFR 40N90P 48
IXFR 44N50P 46
IXFR 44N50Q3 58
IXFR 44N80P 48
IXFR 48N60P 47
IXFR 48N60Q3 58
IXFR 64N50P 46
IXFR 64N50Q3 58
IXFR 64N60P 47
IXFR 64N60Q3 58
IXFR 80N50P 46
IXFR 80N50Q3 58
IXFR 80N60P3 52
IXFR 102N30P 45
IXFR 140N20P 45
IXFR 140N30P 46
IXFR 180N15P 45
IXFR 200N10P 45
IXFR 230N20T 37
IXFT 14N80P 48
IXFT 15N100Q3 58
IXFT 16N80P 48
IXFT 16N120P 50
IXFT 18N90P 48
IXFT 18N100Q3 58
IXFT 20N80P 48
IXFT 20N100P 49
IXFT 24N80P 48
IXFT 24N90P 48
IXFT 26N60P 47
IXFT 30N50P 46
IXFT 30N50Q3 58
IXFT 30N60P 47
IXFT 36N50P 46
IXFT 36N60P 47
IXFT 42N50P2 51
IXFT 44N50P 46
IXFT 44N50Q3 58
IXFT 50N30Q3 58
IXFT 50N50P3 52
IXFT 50N60P3 52
IXFT 52N50P2 51
IXFT 60N50P3 52
IXFT 69N30P 45
IXFT 70N20Q3 58
IXFT 70N30Q3 58
IXFT 86N30T 37
IXFT 88N30P 46
IXFT 94N30P3 51
IXFT 94N30T 37
IXFT 96N20P 45
IXFT 120N15P 45
IXFT 120N25T 37
IXFT 140N10P 45
IXFT 150N17T2 40
IXFT 150N20T 37
IXFT 320N10T2 40
IXFT 340N075T2 40
IXFT 400N075T2 40
IXFV 10N100P 49
IXFV 12N80P 48
IXFV 12N90P 48
IXFV 12N100P 49
IXFV 12N120P 49
IXFV 14N80P 48
IXFV 15N100P 49
IXFV 16N80P 48
IXFV 18N60P 47
IXFV 18N90P 48
IXFV 20N80P 48
IXFV 22N50P 46
IXFV 22N60P 47
IXFV 26N50P 46
IXFV 26N60P 47
IXFV 30N50P 46
IXFV 30N60P 47
IXFV 36N50P 46
IXFV 52N30P 45
IXFV 74N20P 45
IXFV 96N15P 45
IXFV 96N20P 45
IXFV 110N10P 45
IXFV 110N25T 37
IXFX 20N120P 50
IXFX 24N100Q3 58
IXFX 26N100P 49
IXFX 26N120P 50
IXFX 32N80P 48
IXFX 32N80Q3 58
IXFX 32N90P 49
IXFX 32N100P 49
IXFX 32N100Q3 58
IXFX 40N90P 49
IXFX 44N80P 48
IXFX 44N80Q3 58
IXFX 48N60P 47
IXFX 48N60Q3 58
IXFX 64N50P 46
IXFX 64N50Q3 58
IXFX 64N60P 47
IXFX 64N60P3 52
IXFX 64N60Q3 58
IXFX 74N50P2 51
IXFX 78N50P3 52
IXFX 80N50P 47
IXFX 80N50Q3 58
IXFX 80N60P3 52
IXFX 94N50P2 51
IXFX 98N50P3 52
IXFX 120N25P 45
IXFX 120N30P3 51
IXFX 120N30T 37
IXFX 140N25T 37
IXFX 140N30P 46
IXFX 150N30P3 51
IXFX 160N30T 37
IXFX 170N20P 45
IXFX 170N20T 37
IXFX 180N15P 45
IXFX 180N25T 37
IXFX 200N10P 45
IXFX 220N15P 45
IXFX 220N17T2 40
IXFX 230N20T 37
IXFX 240N15T2 40
IXFX 250N10P 45
IXFX 320N17T2 40
IXFX 360N10T 37
IXFX 360N15T2 40
IXFX 420N10T 37
IXFX 520N075T2 40
IXFY 4N60P3 52
IXFY 5N50P3 51
IXFZ 140N25T 37
IXFZ 520N075T2 40
IXGA 12N120A3 18
IXGA 20N120A3 18
IXGA 20N120B3 18
➢ IXGA 20N250HV 0, 20
IXGA 30N60C3 16
➢ IXGA 30N60C3C1 19
IXGA 30N60C3D4 16
IXGA 30N120B3 18
IXGA 36N60A3 17
IXGA 42N30C3 16
IXGA 48N60A3 17
IXGA 48N60B3 17
IXGA 48N60C3 16
IXGA 50N60B4 18
IXGA 50N60C4 18
IXGB 200N60B3 16
IXGF 20N250 9, 20
IXGF 20N300 9, 20
IXGF 25N250 9, 20
IXGF 25N300 9, 20
IXGF 30N400 9, 20
IXGF 32N170 9, 19
IXGF 36N300 9, 20
IXGH 2N250 20
IXGH 4N250C 20
IXGH 6N170 19
IXGH 6N170A 20
IXGH 10N170 19
IXGH 10N170A 20
IXGH 10N300 20
IXGH 12N120A3 18
IXGH 16N170 19
IXGH 16N170A 20
IXGH 16N170AH1 20
IXGH 20N120A3 18
IXGH 24N60C4 18
IXGH 24N60C4D1 18
IXGH 24N170 19
IXGH 24N170A 20
IXGH 24N170AH1 20
IXGH 25N160 19
IXGH 25N250 20
IXGH 28N60B3D1 16
IXGH 30N60B4 18
IXGH 30N60C3 16
➢ IXGH 30N60C3C1 19
IXGH 30N60C3D1 16
IXGH 30N120B3 18
IXGH 30N120B3D1 18
IXGH 32N100A3 18
IXGH 32N120A3 18
IXGH 32N170 19
IXGH 32N170A 20
IXGH 36N60A3 17
IXGH 36N60A3D4 16
IXGH 36N60B3 17
➢ IXGH 36N60B3C1 19
IXGH 36N60B3D1 17
IXGH 36N60B3D4 17
IXGH 42N30C3 16
IXGH 48N60A3 17
IXGH 48N60A3D1 16
IXGH 48N60B3 17
➢ IXGH 48N60B3C1 19
IXGH 48N60B3D1 17
IXGH 48N60C3 16
➢ IXGH 48N60C3C1 19
IXGH 48N60C3D1 16
IXGH 50N60B4 18
IXGH 50N60B4D1 18
IXGH 50N60C4 18
IXGH 50N60C4D1 18
IXGH 56N60A3 17
IXGH 56N60B3 17
IXGH 56N60B3D1 17
IXGH 60N30C3 16
IXGH 60N60C3 16
IXGH 60N60C3D1 16
IXGH 64N60A3 17
IXGH 64N60B3 17
IXGH 72N60A3 16
IXGH 72N60B3 16
IXGH 72N60C3 16
IXGH 85N30C3 16
IXGH 90N60B3 16
IXGH 100N30B3 16
IXGH 100N30C3 16
IXGH 120N30B3 16
IXGH 120N30C3 16
➢ IXGJ 50N60C4D1 0, 18

Alphanumeric Index

➢ New
○ Not for new design
✧ Under development

IXGK 55N120A3H1 18
IXGK 64N60B3D1 17
IXGK 72N60A3H1 16
IXGK 72N60B3H1 16
IXGK 75N250 20
IXGK 82N120A3 18
IXGK 82N120B3 18
IXGK 100N170 19
IXGK 120N60A3 17
IXGK 120N60B3 17
IXGK 120N120A3 18
IXGK 120N120B3 18
IXGK 320N60A3 17
IXGK 320N60B3 17
IXGK 400N30A3 16
IXGL 75N250 20
IXGL 200N60B3 17
IXGN 72N60A3 17
IXGN 72N60C3H1 17
IXGN 82N120B3H1 18
IXGN 100N170 19
IXGN 120N60A3 17
IXGN 120N60A3D1 17
IXGN 200N60B3 17
IXGN 320N60A3 17
IXGN 400N30A3 16
IXGN 400N60A3 17
IXGN 400N60B3 17
IXGP 12N120A3 18
IXGP 20N120A3 18
IXGP 20N120B3 18
IXGP 24N60C4 18
IXGP 24N60C4D1 18
IXGP 30N60B4D1 18
IXGP 30N60C3 16
IXGP 30N60C3C1 16, 19
IXGP 30N60C3D4 16
IXGP 30N120B3 18
IXGP 36N60A3 17
IXGP 42N30C3 16
IXGP 48N60A3 17
IXGP 48N60B3 17
IXGP 48N60C3 16
IXGP 50N60B4 18
IXGP 50N60C4 18
IXGQ 50N60B4D1 18
IXGQ 50N60C4D1 18
IXGR 6N170A 20
IXGR 16N170AH1 20
IXGR 32N170AH1 20
IXGR 32N170H1 19
IXGR 48N60B3 16
IXGR 48N60B3D1 16
IXGR 48N60C3D1 16
IXGR 50N160H1 19
IXGR 55N120A3H1 18
➢ IXGR 60N60C2C1 19
➢ IXGR 60N60C3C1 19
IXGR 60N60C3D1 16
IXGR 64N60A3 17
IXGR 72N60A3 17
IXGR 72N60A3H1 16
IXGR 72N60B3D1 16
IXGR 72N60B3H1 16
IXGR 72N60C3D1 16
IXGT 2N250 20
IXGT 4N250C 20
IXGT 6N170 19
IXGT 6N170A 20
IXGT 10N170 19
IXGT 10N170A 20
IXGT 16N170 19
IXGT 16N170A 20
IXGT 16N170AH1 20
IXGT 24N170 19
IXGT 24N170A 20
IXGT 24N170AH1 20
IXGT 25N160 19
IXGT 25N250 20
➢ IXGT 25N250HV 0, 20
IXGT 30N60C3D1 16
IXGT 30N120B3D1 18
IXGT 32N100A3 18
IXGT 32N120A3 18
IXGT 32N170 19
IXGT 32N170A 20
IXGT 60N60C3D1 16
IXGT 64N60A3 17
IXGT 64N60B3 17
IXGT 72N60A3 16
IXGT 72N60B3 17
IXGX 32N170AH1 20
IXGX 32N170H1 19
IXGX 55N120A3H1 18
IXGX 64N60B3D1 17
IXGX 72N60A3H1 17
IXGX 72N60B3H1 17
IXGX 72N60C3H1 17
IXGX 75N250 20
IXGX 82N120A3 18
IXGX 82N120B3 18
IXGX 100N170 19
IXGX 120N60A3 17
IXGX 120N60B3 17
IXGX 120N120A3 18
IXGX 120N120B3 18
IXGX 320N60A3 17
IXGX 320N60B3 17
IXGX 400N30A3 16
IXKC 13N80C 60
○ IXKC 15N60C5 60
IXKC 20N60C 60
○ IXKC 25N80C 60
○ IXKC 40N60C 60
✧ IXKF 40N60SCC1 60
IXKF 40N60SCD1 9, 60
➢ IXKF 40N60SCH1 9, 60
○ IXKH 20N60C5 60
○ IXKH 24N60C5 60
○ IXKH 30N60C5 60
IXKH 35N60C5 60
IXKH 47N60C 60
IXKH 70N60C5 60
IXKK 85N60C 60
IXKN 40N60C 60
IXKN 45N80C 60
IXKN 75N60C 60
IXKP 10N60C5 60
○ IXKP 13N60C5M 60
○ IXKP 20N60C5 60
○ IXKP 24N60C5 60
○ IXKP 24N60C5M 60
IXKR 25N80C 60
IXKR 40N60C 60
IXKR 47N60C5 60
IXKT 70N60C5 60
IXKU 5-505 22, 25
IXLF 19N250A 9, 20
IXRB 5-506 22, 25
IXTA 1N80P 44
IXTA 1N100 53
IXTA 1N100P 44
IXTA 1N120P 44
IXTA 1R4N100P 44
IXTA 1R4N120P 44
IXTA 1R6N100D2 55
IXTA 1R6N50D2 55
IXTA 2N80P 44
IXTA 2N100 53
IXTA 2N100P 44
IXTA 02N250 59
➢ IXTA 02N450HV 0, 59
IXTA 2R4N120P 44
IXTA 3N50D2 55
IXTA 3N50P 42
IXTA 3N60P 43
IXTA 3N100D2 55
➢ IXTA 3N100D2HV 0, 55
IXTA 3N100P 44
IXTA 3N120 53
IXTA 4N60P 43
IXTA 4N80P 44
IXTA 5N50P 42
IXTA 5N60P 43
IXTA 05N100 53
IXTA 05N100P 44
IXTA 6N50D2 55
IXTA 6N50P 42
IXTA 6N100D2 55
IXTA 06N120P 44
IXTA 7N60P 43
IXTA 08N50D2 55
IXTA 8N50P 42
IXTA 08N100D2 55
IXTA 08N100P 44
IXTA 08N120P 44
IXTA 10N60P 43
IXTA 10P15T 57
IXTA 10P50P 56
IXTA 12N50P 42
IXTA 14N60P 43
➢ IXTA 15N50L2 54
IXTA 15P15T 57
IXTA 16N50P 42
IXTA 18P10T 57
IXTA 24P085T 57
IXTA 26P10T 57
IXTA 26P20P 56
IXTA 28P065T 57
IXTA 32N20T 36
IXTA 32P05T 57
IXTA 32P20T 57
IXTA 36N30P 42
IXTA 36P15P 56
IXTA 42N15T 35
IXTA 42N25P 41
IXTA 44P15T 57
IXTA 48N20T 36
IXTA 48P05T 57
IXTA 50N20P 41
IXTA 50N25T 36
IXTA 52P10P 56
IXTA 56N15T 0
IXTA 60N10T 35
IXTA 60N20T 36
IXTA 62N15P 41
IXTA 70N075T2 38
IXTA 75N10P 41
IXTA 76N25T 36
IXTA 76P10T 57
IXTA 80N10T 35
IXTA 80N10T7 35
IXTA 80N12T2 38
IXTA 86N20T 36
IXTA 88N085T 35
IXTA 90N055T2 38
IXTA 90N075T2 38
IXTA 96P085T 57
IXTA 100N04T2 38
IXTA 102N15T 36
IXTA 110N055T2 38
IXTA 110N055T7 35
IXTA 120N04T2 38
IXTA 120N075T2 38
IXTA 120P065T 57
IXTA 130N065T2 38
IXTA 130N10T 35
IXTA 130N10T7 35
IXTA 140N055T2 38
IXTA 140P05T 57
IXTA 160N04T2 38
IXTA 160N10T 35
IXTA 160N10T7 35
IXTA 170N075T2 38
IXTA 180N10T 35
IXTA 180N10T7 35
IXTA 200N055T2 38
IXTA 200N055T2-7 38
IXTA 220N04T2 38
IXTA 220N04T2-7 38
IXTA 230N075T2 38
IXTA 230N075T2-7 38
IXTA 260N055T2 38
IXTA 260N055T2-7 38
IXTA 300N04T2 38
IXTA 300N04T2-7 38
IXTA 460P2 51
IXTC 26N50P 42
IXTC 36P15P 56
IXTC 96N25T 36
IXTC 110N055T 35
IXTC 110N25T 36
IXTC 160N10T 35
IXTC 180N10T 35
IXTC 200N10T 35
IXTC 230N085T 35
IXTF 1N250 9, 59
IXTF 1N450 9, 59
IXTF 02N450 9, 59
IXTF 200N10T 9, 35
IXTF 280N055T 9, 35
IXTH 1N250 59
➢ IXTH 2N170D2 55
IXTH 02N250 59
IXTH 2R4N120P 44
IXTH 3N100P 44
IXTH 3N120 53
IXTH 3N150 53
IXTH 4N150 53
IXTH 6N50D2 55
IXTH 6N100D2 55
IXTH 6N120 53
IXTH 6N150 53
➢ IXTH 10N100D2 55
IXTH 10P50P 56
IXTH 15N50L2 54
➢ IXTH 16N10D2 55
IXTH 16N20D2 55
IXTH 16N50D2 55
IXTH 16P60P 56
IXTH 20P50P 56
IXTH 22N50P 42
IXTH 26N60P 43
IXTH 26P20P 56
IXTH 30N50L2 54
IXTH 30N50P 43
IXTH 30N60L2 54
IXTH 30N60P 43
IXTH 32P20T 57
IXTH 36N50P 43
IXTH 36P15P 56
IXTH 40N50L2 54
IXTH 44P15T 57
IXTH 48P20P 56
IXTH 50N25T 36
IXTH 52P10P 56
IXTH 60N20L2 54
IXTH 68P20T 57
IXTH 75N10L2 54
IXTH 76N25T 36
IXTH 76P10T 57
IXTH 86N25T 36
IXTH 88N30P 42
IXTH 90P10P 56
IXTH 96N20P 41
IXTH 96N25T 36
IXTH 96P085T 57
IXTH 102N15T 36
IXTH 102N20T 36
IXTH 110N10L2 54
IXTH 110N25T 36
IXTH 120P065T 57
IXTH 130N10T 35
IXTH 130N15T 36
IXTH 130N20T 36
IXTH 140P05T 57
IXTH 140P10T 57
IXTH 160N10T 35
IXTH 160N15T 36
IXTH 180N10T 35
IXTH 200N10T 35
IXTH 260N055T2 38
IXTH 300N04T2 38
IXTH 360N055T2 38
IXTH 420N04T2 38
IXTH 440N055T2 38
IXTH 450P2 51
IXTH 460P2 51
IXTH 500N04T2 38
IXTK 5N250 59
IXTK 32P60P 56
IXTK 40P50P 56
IXTK 60N50L2 54
IXTK 82N25P 41
IXTK 88N30P 42
IXTK 90N25L2 54

Alphanumeric Index

➢ New
○ Not for new design
✧ Under development

IXTK 90P20P 56
IXTK 100N25P 41
IXTK 102N30P 42
IXTK 110N20L2 54
IXTK 120N20P 41
IXTK 120N25P 41
IXTK 120P20T 57
IXTK 140N20P 41
IXTK 140N30P 42
IXTK 150N15P 41
IXTK 170N10P 41
IXTK 170P10P 56
IXTK 180N15P 41
IXTK 200N10L2 54
IXTK 200N10P 41
IXTK 210P10T 57
IXTK 550N055T2 38
IXTK 600N04T2 38
IXTL 2N450 59
IXTL 2x180N10T 35
IXTN 5N250 59
IXTN 32P60P 56
IXTN 40P50P 56
IXTN 60N50L2 54
IXTN 90N25L2 54
IXTN 90P20P 56
IXTN 110N20L2 54
IXTN 120P20T 57
IXTN 170P10P 56
IXTN 200N10L2 54
IXTN 200N10T 35
IXTN 210P10T 57
IXTN 320N10T 35
IXTN 550N055T2 38
IXTN 600N04T2 38
IXTP 1N80P 44
IXTP 1N100 53
IXTP 1N100P 44
IXTP 1N120P 44
IXTP 1R4N100P 44
IXTP 1R4N120P 44
IXTP 1R4N60P 43
IXTP 1R6N100D2 55
IXTP 1R6N50D2 55
IXTP 1R6N50P 42
IXTP 2N60P 43
IXTP 2N80P 44
IXTP 2N100 53
IXTP 2N100P 44
IXTP 02N120P 44
IXTP 2R4N120P 44
IXTP 2R4N50P 42
IXTP 3N50D2 55
IXTP 3N50P 42
IXTP 3N60P 43
IXTP 3N100D2 55
IXTP 3N100P 44
IXTP 3N120 53
IXTP 4N60P 43
IXTP 4N80P 44
IXTP 5N50P 42
IXTP 5N60P 43
IXTP 05N100 53
IXTP 05N100M 53
IXTP 05N100P 44
IXTP 6N50D2 55
IXTP 6N50P 42
IXTP 6N100D2 55
IXTP 06N120P 44
IXTP 7N60P 43
IXTP 7N60PM 43
IXTP 08N50D2 55
IXTP 8N50P 42
IXTP 8N50PM 42
IXTP 08N100D2 55
IXTP 08N100P 44
IXTP 08N120P 44
IXTP 10N60P 43
IXTP 10N60PM 43
IXTP 10P15T 57
IXTP 10P50P 56
IXTP 12N50P 42
IXTP 12N50PM 42
IXTP 14N60P 43
IXTP 14N60PM 43
IXTP 15N50L2 54
IXTP 15P15T 57
IXTP 16N50P 42
IXTP 16N50PM 42
IXTP 18N60PM 43
IXTP 18P10T 57
IXTP 22N50PM 42
IXTP 24P085T 57
IXTP 26P10T 57
IXTP 26P20P 56
IXTP 28P065T 57
IXTP 32N20T 36
IXTP 32P05T 57
IXTP 32P20T 57
IXTP 36N30P 42
IXTP 36P15P 56
IXTP 42N15T 35
IXTP 42N25P 41
IXTP 44N10T 35
IXTP 44P15T 57
IXTP 48N20T 36
IXTP 48P05T 57
IXTP 50N20P 41
IXTP 50N20PM 41
IXTP 50N25T 36
IXTP 52P10P 56
IXTP 56N15T 35
IXTP 60N10T 35
IXTP 60N10TM 35
IXTP 60N20T 36
IXTP 62N15P 41
IXTP 70N075T2 38
IXTP 75N10P 41
IXTP 76N25T 36
IXTP 76P10T 57
IXTP 80N10T 35
IXTP 80N12T2 38
IXTP 86N20T 36
IXTP 90N055T2 38
IXTP 90N075T2 38
IXTP 96P085T 57
IXTP 98N075T 35
IXTP 100N04T2 38
IXTP 102N15T 0
IXTP 110N055T2 38
IXTP 120N04T2 38
IXTP 120N075T2 38
IXTP 120P065T 57
IXTP 130N065T2 38
IXTP 130N10T 35
IXTP 140N055T2 38
IXTP 140P05T 57
IXTP 160N04T2 38
IXTP 160N10T 35
IXTP 170N075T2 38
IXTP 180N10T 35
IXTP 200N055T2 38
IXTP 220N04T2 38
IXTP 230N075T2 38
IXTP 260N055T2 38
IXTP 300N04T2 38
IXTP 450P2 51
IXTP 460P2 51
IXTQ 10P50P 56
IXTQ 14N60P 43
IXTQ 16N50P 42
IXTQ 18N60P 43
IXTQ 22N50P 42
IXTQ 22N60P 43
IXTQ 26N50P 42
IXTQ 26N60P 43
IXTQ 26P20P 56
IXTQ 30N50L2 54
IXTQ 30N50P 43
IXTQ 30N60L2 54
IXTQ 30N60P 43
IXTQ 32P20T 57
IXTQ 36N30P 42
IXTQ 36N50P 43
IXTQ 36P15P 56
IXTQ 40N50L2 54
IXTQ 42N25P 41
IXTQ 44N50P 43
IXTQ 44P15T 57
IXTQ 48N20T 36
IXTQ 50N20P 41
IXTQ 50N25T 36
IXTQ 52N30P 42
IXTQ 52P10P 56
IXTQ 60N10T 35
IXTQ 60N20L2 54
IXTQ 60N20T 36
IXTQ 62N15P 41
IXTQ 64N25P 41
IXTQ 69N30P 42
IXTQ 69N30PM 42
IXTQ 74N20P 41
IXTQ 75N10P 41
IXTQ 76N25T 36
IXTQ 82N25P 41
IXTQ 86N20T 36
IXTQ 86N25T 36
IXTQ 88N30P 42
IXTQ 96N15P 41
IXTQ 96N20P 41
IXTQ 96N25T 36
IXTQ 100N25P 41
IXTQ 102N15T 36
IXTQ 102N20T 36
IXTQ 110N10P 41
IXTQ 120N15P 41
IXTQ 120N20P 41
IXTQ 130N10T 35
IXTQ 130N15T 36
IXTQ 140N10P 41
IXTQ 150N15P 41
IXTQ 160N10T 35
IXTQ 170N10P 41
IXTQ 180N10T 35
IXTQ 200N10T 35
IXTQ 450P2 51
IXTQ 460P2 51
IXTQ 470P2 51
IXTQ 480P2 51
IXTR 16P60P 56
IXTR 20P50P 56
IXTR 32P60P 56
IXTR 36P15P 56
IXTR 40P50P 56
IXTR 48P20P 56
IXTR 68P20T 57
IXTR 90P10P 56
IXTR 90P20P 56
IXTR 120P20T 57
IXTR 140P10T 57
IXTR 170P10P 56
IXTR 200N10P 41
IXTR 210P10T 57
➢ IXTT 1N250HV 0, 59
➢ IXTT 1N450HV 0, 59
➢ IXTT 2N170D2 55
➢ IXTT 02N450HV 0, 59
IXTT 6N120 53
➢ IXTT 10N100D2 55
IXTT 16N10D2 55
IXTT 16N20D2 55
IXTT 16N50D2 55
IXTT 16P60P 56
IXTT 20P50P 56
IXTT 26N50P 42
IXTT 26N60P 43
IXTT 30N50L2 54
IXTT 30N50P 43
IXTT 30N60L2 54
IXTT 30N60P 43
IXTT 36N50P 43
IXTT 40N50L2 54
IXTT 48P20P 56
IXTT 52N30P 42
IXTT 60N20L2 54
IXTT 64N25P 41
IXTT 68P20T 57
IXTT 69N30P 42
IXTT 74N20P 41
IXTT 75N10L2 54
IXTT 82N25P 41
IXTT 88N30P 42
IXTT 90P10P 56
IXTT 96N15P 41
IXTT 96N20P 41
IXTT 100N25P 41
IXTT 110N10L2 54
IXTT 110N10P 41
IXTT 120N15P 41
IXTT 140N10P 41
IXTT 140P10T 57
IXTT 170N10P 41
IXTT 360N055T2 38
IXTT 440N055T2 38
IXTT 500N04T2 38
IXTU 1N80P 44
IXTU 01N100 53
IXTU 1R4N60P 43
IXTU 2N80P 44
IXTU 4N60P 43
IXTU 5N50P 42
IXTU 05N100 53
IXTU 12N06T 35
IXTV 18N60P 43
IXTV 22N50P 42
IXTV 22N60P 43
IXTV 26N50P 42
IXTV 26N60P 43
IXTV 30N50P 42
IXTV 30N60P 43
IXTV 36N50P 43
IXTV 86N25T 36
IXTV 96N25T 36
IXTV 102N20T 36
IXTV 200N10T 35
IXTV 270N055T2 38
IXTX 5N250 59
IXTX 24N100 53
IXTX 32P60P 56
IXTX 40P50P 56
IXTX 60N50L2 54
IXTX 90N25L2 54
IXTX 90P20P 56
IXTX 110N20L2 54
IXTX 120P20T 57
IXTX 170P10P 56
IXTX 200N10L2 54
IXTX 210P10T 57
IXTX 550N055T2 38
IXTX 600N04T2 38
IXTY 1N80P 44
IXTY 01N100 53
IXTY 1N100P 44
IXTY 1R4N100P 44
IXTY 1R4N60P 43
IXTY 1R6N100D2 55
IXTY 1R6N50D2 55
IXTY 1R6N50P 42
IXTY 2N60P 43
IXTY 2N80P 44
IXTY 2N100P 44
IXTY 02N120P 44
IXTY 2R4N50P 42
IXTY 3N50P 42
IXTY 3N60P 43
IXTY 4N60P 43
IXTY 5N50P 42
IXTY 05N100 53
IXTY 08N50D2 55
IXTY 08N100D2 55
IXTY 08N100P 44
IXTY 10P15T 57
IXTY 12N06T 35
IXTY 15P15T 57
IXTY 18P10T 57
IXTY 26P10T 57
IXTY 32P05T 57
IXTY 44N10T 35
IXTY 48P05T 57
IXTY 90N055T2 38
IXTZ 550N055T2 38
➢ IXXA 30N65C3HV 0, 13
IXXA 50N60B3 13
IXXH 30N60B3 13
IXXH 30N60B3D1 13
IXXH 30N60C3D1 13

Alphanumeric Index

➢ New
○ Not for new design
✧ Under development

➢ IXXH 30N65B4 13
➢ IXXH 40N65B4 13
IXXH 50N60B3 13
IXXH 50N60B3D1 13
IXXH 50N60C3 13
IXXH 50N60C3D1 13
➢ IXXH 60N65B4 13
➢ IXXH 60N65B4H1 13
➢ IXXH 60N65C4 13
IXXH 75N60B3 13
IXXH 75N60B3D1 13
IXXH 75N60C3 13
IXXH 75N60C3D1 13
➢ IXXH 80N65B4 13
➢ IXXH 80N65B4H1 13
IXXH 100N60B3 13
IXXH 100N60C3 13
➢ IXXH 110N65C4 13
IXXK 100N60B3H1 13
IXXK 100N60C3H1 13
➢ IXXK 110N65B4H1 13
➢ IXXK 160N65B4 13
➢ IXXK 160N65C4 13
IXXK 200N60B3 13
IXXK 200N60C3 13
➢ IXXK 200N65B4 13
IXXK 300N60B3 13
IXXK 300N60C3 13
IXXN 100N60B3H1 13
➢ IXXN 110N65B4H1 13
➢ IXXN 110N65C4H1 13
IXXN 200N60B3 13
IXXN 200N60B3H1 13
IXXN 200N60C3H1 13
IXXP 50N60B3 13
IXXR 100N60B3H1 13
➢ IXXR 110N65B4H1 13
IXXX 100N60B3H1 13
IXXX 100N60C3H1 13
➢ IXXX 110N65B4H1 13
➢ IXXX 160N65B4 13
➢ IXXX 160N65C4 13
IXXX 200N60B3 13
IXXX 200N60C3 13
➢ IXXX 200N65B4 13
IXXX 300N60B3 13
IXXX 300N60C3 13
➢ IXYB 82N120C3H1 14
➢ IXYH 20N120C3 14
➢ IXYH 20N120C3D1 14
➢ IXYH 30N120C3 14
➢ IXYH 30N120C3D1 14
➢ IXYH 40N120B3 14
➢ IXYH 40N120B3D1 14
➢ IXYH 40N120C3 14
➢ IXYH 40N120C3D1 14
➢ IXYH 40N650C3H1 13
➢ IXYH 50N120C3 14
➢ IXYH 50N120C3D1 14
➢ IXYH 82N120C3 14
➢ IXYJ 20N120C3D1 0, 14
➢ IXYK 100N120B3 14
➢ IXYK 100N120C3 14
➢ IXYK 120N120C3 14
➢ IXYN 82N120C3 14
➢ IXYN 82N120C3H1 14
➢ IXYN 100N120B3H1 14
➢ IXYN 100N120C3 14
➢ IXYN 100N120C3H1 14
➢ IXYP 20N120C3 14
➢ IXYP 30N120C3 14
➢ IXYR 50N120C3D1 14
➢ IXYR 100N120C3 14
➢ IXYT 20N120C3D1HV 0, 14
➢ IXYX 100N120B3 14
➢ IXYX 100N120C3 14
➢ IXYX 120N120C3 14
L
LKK 47-06C5 60
M
MCA 600-22io1W 140
MCA 700-14io1W 140
MCA 700-18io1W 140
✧ MCB 21P1200LC 4
✧ MCB 21RK1200DCGLC 4, 63, 64
MCC 19-08io1B 84
MCC 19-08io8B 84
MCC 19-12io1B 84
MCC 19-12io8B 84
MCC 19-14io1B 84
MCC 19-14io8B 84
MCC 19-16io1B 84
MCC 19-16io8B 84
MCC 21-08io8B 84
MCC 21-12io8B 84
MCC 21-14io8B 84
MCC 21-16io8B 84
MCC 26-08io1B 84
MCC 26-08io8B 84
MCC 26-12io1B 84
MCC 26-12io8B 84
MCC 26-14io1B 84
MCC 26-14io8B 84
MCC 26-16io1B 84
MCC 26-16io8B 84
MCC 44-08io1B 84
MCC 44-08io8B 84
MCC 44-12io1B 84
MCC 44-12io8B 84
MCC 44-14io1B 84
MCC 44-14io8B 84
MCC 44-16io1B 84
MCC 44-16io8B 84
MCC 44-18io1B 84
MCC 44-18io8B 84
MCC 56-08io1B 84
MCC 56-08io8B 84
MCC 56-12io1B 84
MCC 56-12io8B 84
MCC 56-14io1B 84
MCC 56-14io8B 84
MCC 56-16io1B 84
MCC 56-16io8B 84
MCC 56-18io1B 84
MCC 56-18io8B 84
MCC 72-08io1B 85
MCC 72-08io8B 85
MCC 72-12io1B 85
MCC 72-12io8B 85
MCC 72-14io1B 85
MCC 72-14io8B 85
MCC 72-16io1B 85
MCC 72-16io8B 85
MCC 72-18io1B 85
MCC 72-18io8B 85
MCC 94-20io1B 85
MCC 94-22io1B 85
MCC 94-24io1B 85
MCC 95-08io1B 85
MCC 95-08io8B 85
MCC 95-12io1B 85
MCC 95-12io8B 85
MCC 95-14io1B 85
MCC 95-14io8B 85
MCC 95-16io1B 85
MCC 95-16io8B 85
MCC 95-18io1B 85
MCC 95-18io8B 85
MCC 132-08io1 85
MCC 132-12io1 85
MCC 132-14io1 85
MCC 132-16io1 85
MCC 132-18io1 85
MCC 161-20io1 85
MCC 161-22io1 85
MCC 162-08io1 85
MCC 162-12io1 85
MCC 162-14io1 85
MCC 162-16io1 85
MCC 162-18io1 85
MCC 200-14io1 86
MCC 200-16io1 86
MCC 200-18io1 86
MCC 220-08io1 86
MCC 220-12io1 86
MCC 220-14io1 86
MCC 220-16io1 86
MCC 220-18io1 86
MCC 224-20io1 86
MCC 224-22io1 86
MCC 224-24io1 86
MCC 225-12io1 86
MCC 225-14io1 86
MCC 225-16io1 86
MCC 225-18io1 86
MCC 250-08io1 86
MCC 250-12io1 86
MCC 250-14io1 86
MCC 250-16io1 86
MCC 250-18io1 86
MCC 255-12io1 86
MCC 255-14io1 86
MCC 255-16io1 86
MCC 255-18io1 86
MCC 310-08io1 86
MCC 310-12io1 86
MCC 310-14io1 86
MCC 310-16io1 86
MCC 310-18io1 86
MCC 312-12io1 86
MCC 312-14io1 86
MCC 312-16io1 86
MCC 312-18io1 86
MCC 320-30io2 137
MCC 320-36io2 137
MCC 431-20io2 137
MCC 431-22io2 137
MCC 431-24io2 137
○ MCC 500-14io1 137
○ MCC 500-18io1 137
○ MCC 500-22io1 137
➢ MCC 500-30io7 137
➢ MCC 500-36io7 137
MCC 501-12io2 137
MCC 501-14io2 137
MCC 501-16io2 137
MCC 501-18io2 137
➢ MCC 552-12io2 137
➢ MCC 552-14io2 137
➢ MCC 552-16io2 137
➢ MCC 580-28io7 137
MCC 600-22io1W 140
➢ MCC 650-24io7 137
MCC 700-14io1W 140
MCC 700-18io1W 140
➢ MCC 720-14io7 137
➢ MCC 720-18io7 137
MCD 26-08io1B 81
MCD 26-08io8B 81
MCD 26-12io1B 81
MCD 26-12io8B 81
MCD 26-14io1B 81
MCD 26-14io8B 81
MCD 26-16io1B 81
MCD 26-16io8B 81
MCD 40-12io6 81
MCD 40-16io6 81
MCD 44-08io1B 81
MCD 44-08io8B 81
MCD 44-12io1B 81
MCD 44-12io8B 81
MCD 44-14io1B 81
MCD 44-14io8B 81
MCD 44-16io1B 81
MCD 44-16io8B 81
MCD 44-18io1B 81
MCD 44-18io8B 81
MCD 56-08io1B 81
MCD 56-08io8B 81
MCD 56-12io1B 81
MCD 56-12io8B 81
MCD 56-14io1B 81
MCD 56-14io8B 81
MCD 56-16io1B 81
MCD 56-16io8B 81
MCD 56-18io1B 81
MCD 56-18io8B 81
MCD 72-08io1B 81
MCD 72-08io8B 82
MCD 72-12io1B 81
MCD 72-12io8B 82
MCD 72-14io1B 81
MCD 72-14io8B 82
MCD 72-16io1B 81
MCD 72-16io8B 82
MCD 72-18io1B 81
MCD 72-18io8B 82
MCD 94-20io1B 82
MCD 94-22io1B 82
MCD 95-08io1B 82
MCD 95-08io8B 82
MCD 95-12io1B 82
MCD 95-12io8B 82
MCD 95-14io1B 82
MCD 95-14io8B 82
MCD 95-16io1B 82
MCD 95-16io8B 82
MCD 95-18io1B 82
MCD 95-18io8B 82
MCD 132-08io1 82
MCD 132-12io1 82
MCD 132-14io1 82
MCD 132-16io1 82
MCD 132-18io1 82
MCD 161-20io1 82
MCD 161-22io1 82
MCD 162-08io1 82
MCD 162-12io1 82
MCD 162-14io1 82
MCD 162-16io1 82
MCD 162-18io1 82
MCD 200-14io1 82
MCD 200-16io1 82
MCD 200-18io1 82
MCD 220-08io1 83
MCD 220-12io1 83
MCD 220-14io1 83
MCD 220-16io1 83
MCD 224-20io1 83
MCD 224-22io1 83
MCD 225-12io1 83
MCD 225-14io1 83
MCD 225-16io1 83
MCD 225-18io1 83
MCD 250-08io1 83
MCD 250-12io1 83
MCD 250-14io1 83
MCD 250-16io1 83
MCD 250-18io1 83
MCD 255-12io1 83
MCD 255-14io1 83
MCD 255-16io1 83
MCD 255-18io1 83
MCD 310-08io1 83
MCD 310-12io1 83
MCD 310-14io1 83
MCD 310-16io1 83
MCD 310-18io1 83
MCD 310-20io1 83
MCD 310-22io1 83
MCD 312-12io1 83
MCD 312-14io1 83
MCD 312-16io1 83
MCD 312-18io1 83
MCD 320-30io2 138
MCD 320-36io2 138
MCD 431-20io2 138
MCD 431-22io2 138
MCD 431-24io2 138
○ MCD 500-14io1 138
○ MCD 500-18io1 138
○ MCD 500-22io1 138
➢ MCD 500-30io7 138
➢ MCD 500-36io7 138
MCD 501-12io2 138
MCD 501-14io2 138
MCD 501-16io2 138
MCD 501-18io2 138
➢ MCD 552-12io2 138
➢ MCD 552-14io2 138
➢ MCD 552-16io2 138
➢ MCD 580-28io7 138
MCD 600-22io1W 140
➢ MCD 650-24io7 138
MCD 700-14io1W 140
MCD 700-18io1W 140

Alphanumeric Index

➢ New
○ Not for new design
✧ Under development

➢ MCD 720-14io7 138
➢ MCD 720-18io7 138
MCK 200-18io1 86
○ MCK 500-14io1 137
○ MCK 500-18io1 137
○ MCK 500-22io1 137
MCK 600-22io1W 140
MCK 700-14io1W 140
MCK 700-18io1W 140
➢ MCMA 25P1200TA 84
➢ MCMA 25P1600TA 84
➢ MCMA 25PD1200TB 81
➢ MCMA 25PD1600TB 81
➢ MCMA 35P1200TA 84
➢ MCMA 35P1600TA 84
➢ MCMA 35PD1200TB 81
➢ MCMA 35PD1600TB 81
➢ MCMA 50P1200TA 84
➢ MCMA 50P1600TA 84
➢ MCMA 50PD1200TB 81
➢ MCMA 50PD1600TB 81
➢ MCMA 65P1200TA 85
➢ MCMA 65P1600TA 85
➢ MCMA 65PD1200TB 81
➢ MCMA 65PD1600TB 81
➢ MCMA 85P1200TA 85
➢ MCMA 85P1600TA 85
➢ MCMA 85PD1200TB 82
➢ MCMA 85PD1600TB 82
➢ MCMA 110P1200TA 85
➢ MCMA 110P1600TA 85
➢ MCMA 110PD1200TB 82
➢ MCMA 110PD1600TB 82
MCMA 120UJ1800ED 95
➢ MCMA 140P1200TA 85
➢ MCMA 140P1400TA 85
MCMA 140P1600TA 85
➢ MCMA 140P1800TA 85
➢ MCMA 140PD1200TB 82
➢ MCMA 140PD1600TB 82
MCMA 200P1600SA 86
MCMA 200PD1600SA 82
➢ MCMA 240UI1600ED 94
MCMA 260P1600YA 86
MCMA 260PD1600YB 83
MCMA 265P1600KA 86
MCMA 265PD1600KB 83
➢ MCMA 700P1600CA 86
➢ MCMA 700PD1600CB 83
➢ MCNA 40P2200TA 84
➢ MCNA 120P2200TA 85
➢ MCNA 120PD2200TB 82
➢ MCNA 120UI2200TED 94
MCO 25-12io1 87
MCO 25-16io1 87
MCO 50-12io1 87
MCO 50-16io1 87
MCO 75-12io1 87
MCO 75-16io1 87
MCO 100-12io1 87
MCO 100-16io1 87
MCO 150-12io1 87
MCO 150-16io1 87
MCO 450-20io1 87
MCO 450-22io1 87
MCO 500-12io1 87
MCO 500-14io1 87
MCO 500-16io1 87
MCO 500-18io1 87
MCO 600-16io1 87
MCO 600-18io1 87
MCO 600-20io1 87
MCO 600-22io1 87
MCO 741-22io1 137
MCO 801-14io1 137
MCO 801-18io1 137
➢ MCR 500-30io7 137
➢ MCR 500-36io7 137
➢ MCR 580-28io7 137
➢ MCR 650-24io7 137
➢ MCR 720-14io7 137
➢ MCR 720-18io7 137
MDA 95-22N1B 79
○ MDA 600-14N1 139
○ MDA 600-18N1 139
○ MDA 600-22N1 139
➢ MDA 630-30N2 139
➢ MDA 630-36N2 139
➢ MDA 710-22N2 139
➢ MDA 710-26N2 139
➢ MDA 810-12N2 139
➢ MDA 810-16N2 139
➢ MDA 810-18N2 139
MDA 950-14N1W 140
MDA 950-18N1W 140
MDA 950-22N1W 140
➢ MDA 1080-18N7 139
➢ MDA 1080-24N7 139
➢ MDA 1080-28N7 139
MDC 320-30io2 138
MDC 320-36io2 138
MDC 431-20io2 138
MDC 431-22io2 138
MDC 431-24io2 138
○ MDC 500-14io1 138
○ MDC 500-18io1 138
○ MDC 500-22io1 138
➢ MDC 500-30io7 138
➢ MDC 500-36io7 138
MDC 501-12io2 138
MDC 501-14io2 138
MDC 501-16io2 138
MDC 501-18io2 138
➢ MDC 552-12io2 138
➢ MDC 552-14io2 138
➢ MDC 552-16io2 138
➢ MDC 580-28io7 138
MDC 600-22io1W 140
➢ MDC 650-24io7 138
MDC 700-14io1W 140
MDC 700-18io1W 140
➢ MDC 720-14io7 138
➢ MDC 720-18io7 138
MDD 26-08N1B 79
MDD 26-12N1B 79
MDD 26-14N1B 79
MDD 26-16N1B 79
MDD 26-18N1B 79
MDD 44-08N1B 79
MDD 44-12N1B 79
MDD 44-14N1B 79
MDD 44-16N1B 79
MDD 44-18N1B 79
MDD 56-08N1B 79
MDD 56-12N1B 79
MDD 56-14N1B 79
MDD 56-16N1B 79
MDD 56-18N1B 79
MDD 72-08N1B 79
MDD 72-12N1B 79
MDD 72-14N1B 79
MDD 72-16N1B 79
MDD 72-18N1B 79
MDD 95-08N1B 79
MDD 95-12N1B 79
MDD 95-14N1B 79
MDD 95-16N1B 79
MDD 95-18N1B 79
MDD 95-20N1B 79
MDD 95-22N1B 79
MDD 142-08N1 79
MDD 142-12N1 79
MDD 142-14N1 79
MDD 142-16N1 79
MDD 142-18N1 79
MDD 172-08N1 79
MDD 172-12N1 79
MDD 172-14N1 79
MDD 172-16N1 79
MDD 172-18N1 79
MDD 175-28N1 80
MDD 175-34N1 80
MDD 200-14N1 79
MDD 200-16N1 79
MDD 200-18N1 79
MDD 200-22N1 79
MDD 220-08N1 80
MDD 220-12N1 80
MDD 220-14N1 80
MDD 220-16N1 80
MDD 220-18N1 80
MDD 250-08N1 80
MDD 250-12N1 80
MDD 250-14N1 80
MDD 250-16N1 80
MDD 255-12N1 80
MDD 255-14N1 80
MDD 255-16N1 80
MDD 255-18N1 80
MDD 255-20N1 80
MDD 255-22N1 80
MDD 310-08N1 80
MDD 310-12N1 80
MDD 310-14N1 80
MDD 310-16N1 80
MDD 310-18N1 80
MDD 310-20N1 80
MDD 310-22N1 80
MDD 312-12N1 80
MDD 312-14N1 80
MDD 312-16N1 80
MDD 312-18N1 80
MDD 312-20N1 80
MDD 312-22N1 80
○ MDD 600-14N1 139
○ MDD 600-18N1 139
○ MDD 600-22N1 139
MDD 630-30N2 139
MDD 630-36N2 139
MDD 710-22N2 139
MDD 710-26N2 139
MDD 810-12N2 139
MDD 810-16N2 139
MDD 810-18N2 139
MDD 950-14N1W 140
MDD 950-18N1W 140
MDD 950-22N1W 140
➢ MDD 1080-18N7 139
➢ MDD 1080-24N7 139
➢ MDD 1080-28N7 139
MDI 75-12A3 32
MDI 100-12A3 32
MDI 145-12A3 32
MDI 150-12A4 32
MDI 200-12A4 32
MDI 300-12A4 32
MDI 550-12A4 32
○ MDK 600-14N1 139
○ MDK 600-18N1 139
○ MDK 600-22N1 139
➢ MDK 630-30N2 139
➢ MDK 630-36N2 139
➢ MDK 710-22N2 139
➢ MDK 710-26N2 139
➢ MDK 810-12N2 139
➢ MDK 810-16N2 139
➢ MDK 810-18N2 139
MDK 950-14N1W 140
MDK 950-18N1W 140
MDK 950-22N1W 140
➢ MDK 1080-18N7 139
➢ MDK 1080-24N7 139
➢ MDK 1080-28N7 139
➢ MDMA 25P1200TG 79
➢ MDMA 25P1600TG 79
➢ MDMA 35P1200TG 79
➢ MDMA 35P1600TG 79
➢ MDMA 50P1200TG 79
➢ MDMA 50P1600TG 79
➢ MDMA 65P1200TG 79
➢ MDMA 65P1600TG 79
➢ MDMA 85P1200TG 79
➢ MDMA 85P1600TG 79
➢ MDMA 110P1200TG 79
➢ MDMA 110P1600TG 79
➢ MDMA 140P1200TG 79
➢ MDMA 140P1600TG 79
➢ MDMA 140P1800TG 79
➢ MDMA 200P1600SA 80
MDMA 240UB1600ED 94
➢ MDMA 380P1600KC 80
MDMA 700P1600CC 80
➢ MDNA 140P2200TG 79
MDO 500-12N1 80
MDO 500-14N1 80
MDO 500-16N1 80
MDO 500-18N1 80
MDO 500-20N1 80
MDO 500-22N1 80
MDO 600-16N1 80
➢ MDO 1201-14N1 139
➢ MDO 1201-18N1 139
➢ MDO 1201-22N1 139
MEA 75-12DA 74
MEA 95-06DA 74
MEA 250-12DA 74
MEA 300-06DA 74
MEE 75-12DA 74
MEE 95-06DA 74
MEE 250-12DA 74
MEE 300-06DA 74
MEK 75-12DA 74
MEK 95-06DA 74
MEK 150-04DA 74
MEK 250-12DA 74
MEK 300-06DA 74
MEK 350-02DA 74
MEK 600-04DA 74
MEO 450-12DA 74
MEO 500-06DA 74
MEO 550-02DA 74
MIAA 10WB600TMH 22
MIAA 10WD600TMH 22
MIAA 10WE600TMH 22
MIAA 10WF600TMH 22
MIAA 15WB600TMH 22
MIAA 15WD600TMH 22
MIAA 15WE600TMH 22
MIAA 20WB600TMH 22
MIAA 20WD600TMH 22
MIAA 20WE600TMH 22
MID 75-12A3 32
MID 100-12A3 32
MID 145-12A3 32
MID 150-12A4 32
MID 200-12A4 32
MID 300-12A4 32
MID 550-12A4 32
➢ MIEB 76H1200EH 31
➢ MIEB 100W1200DPFTEH 27
MIEB 100W1200TEH 27
➢ MIEB 101H1200EH 31
➢ MIEB 101W1200DPFEH 27
MIEB 101W1200EH 27
➢ MIEB 300W1200TFH 30
➢ MIEB 450W1200TFH 30
MII 75-12A3 32
MII 100-12A3 32
MII 145-12A3 32
MII 150-12A4 32
MII 200-12A4 32
MII 300-12A4 32
MITA 10WB1200TMH 22
MITA 15WB1200TMH 22
➢ MITA 30WB600TMH 22
MITB 10WB1200TMH 22
MITB 15WB1200TMH 22
MIXA 10W1200TMH 25
MIXA 10W1200TML 25
➢ MIXA 10WB1200TED 23
MIXA 10WB1200TMH 22
➢ MIXA 10WB1200TML 23
MIXA 20W1200MC 25
MIXA 20W1200TMH 25
MIXA 20W1200TML 25
MIXA 20WB1200TED 23
MIXA 20WB1200TMH 22
➢ MIXA 20WB1200TMI 28
➢ MIXA 20WB1200TML 23
MIXA 30W1200TED 26
MIXA 30W1200TMH 25
MIXA 30W1200TML 25
➢ MIXA 30WB1200TED 23
➢ MIXA 30WB1200TMI 28
MIXA 40W1200TED 26
MIXA 40W1200TMH 25

Alphanumeric Index

➢ New
○ Not for new design
✧ Under development

MIXA 40W1200TML 25
MIXA 40WB1200TED 23
➢ MIXA 50PM650TMI 28
➢ MIXA 50W650TED 26
➢ MIXA 50W1200TMI 28
➢ MIXA 50WB600TED 23
➢ MIXA 60HU1200VA 32
MIXA 60W1200TED 26
MIXA 60WB1200TEH 24
➢ MIXA 60WH1200TEH 24
➢ MIXA 61H1200ED 31
➢ MIXA 75W650TED 26
➢ MIXA 75W1200TMI 28
➢ MIXA 80R1200VA 32
➢ MIXA 80W1200TED 26
➢ MIXA 80W1200TEH 27
MIXA 80WB1200TEH 24
➢ MIXA 81H1200EH 31
➢ MIXA 81WB1200TEH 24
➢ MIXA 100PM650TMI 28
➢ MIXA 100W1200TEH 27
➢ MIXA 150Q1200VA 32
➢ MIXA 150R1200VA 32
➢ MIXA 150W1200TEH 27
➢ MIXA 225PF1200TSF 29
✧ MIXA 225PF1700TSF 29
➢ MIXA 225RF1200TSF 29
MIXA 225W1200TFH 30
✧ MIXA 225W1700TFH 30
➢ MIXA 300PF1200TSF 29
✧ MIXA 300PF1700TSF 29
MIXA 300W1200TFH 30
✧ MIXA 300W1700TFH 30
➢ MIXA 430LD1200TSF 29
➢ MIXA 450PF1200TSF 29
✧ MIXA 450PF1700TSF 29
MIXA 450W1200TFH 30
✧ MIXA 450W1700TFH 30
➢ MIXA 600AF650TSF 29
➢ MIXA 600CF650TSF 29
➢ MIXA 600PF650TSF 29
✧ MIXA 600PF1200TSF 29
✧ MIXA 600W1200TFH 30
✧ MIXA 1400PF1200TSP 30
✧ MIXA 1400PF1700TSP 30
➢ MIXB 52HR600DCGED 31
➢ MIXB 52HR600ED 31
➢ MIXD 80PM650TMI 28
➢ MIXD 200W650TEH 27
➢ MKE 11R600DCGFC 9, 60, 63, 64
MKE 38P600LB 4
MKE 38RK600DFELB 4, 63, 64
✧ MKG 40RK600DCGLB 4, 63, 64
✧ MKG 40RK600LB 4, 63, 64
MKI 50-06A7 31
MKI 50-06A7T 31
MKI 50-12F7 31
MKI 65-06A7T 31
MKI 75-06A7 31
MKI 75-06A7T 31
MKI 80-06T6K 31
MKI 100-12F8 31
➢ MMIX 1F40N110P 4
➢ MMIX 1F44N100Q3 4
➢ MMIX 1F132N50P3 4
➢ MMIX 1F160N30T 4
➢ MMIX 1F180N25T 4
➢ MMIX 1F210N30P3 4
➢ MMIX 1F230N20T 4
MMIX 1F360N15T2 4
➢ MMIX 1F420N10T 4
MMIX 1F520N075T2 4, 39, 61
➢ MMIX 1G75N250 5
➢ MMIX 1G120N120A3H1 5
➢ MMIX 1G320N60B3 5, 17
MMIX 1T550N055T2 4, 39, 61
MMIX 1T600N04T2 4, 39, 61
➢ MMIX 1Y82N120C3H1 5
➢ MMIX 1Y100N120C3H1 5
➢ MMIX 2S50N60B4D1 5
➢ MMIX 4B12N300 5
➢ MMIX 4B20N300 5
➢ MMIX 4G20N250 5
➢ MMIX 1X100N60B3H1 5
➢ MMIX 1X200N60B3 5
➢ MMIX 1X200N60B3H1 5
MMO 62-12io6 96
MMO 62-16io6 96
MMO 74-12io6 96
MMO 74-16io6 96
MMO 90-12io6 96
MMO 90-14io6 96
MMO 90-16io6 96
MMO 110-08io7 96
MMO 110-12io7 96
MMO 110-14io7 96
MMO 140-08io7 96
MMO 140-12io7 96
MMO 140-16io7 96
MMO 175-08io7 96
MMO 175-12io7 96
MMO 175-16io7 96
MMO 230-08io7 96
MMO 230-12io7 96
MMO 230-14io7 96
MMO 230-16io7 96
MMO 230-18io7 96
➢ MPA 22R600DHGFC 9, 63, 64
MPK 95-06DA 74
✧ MTC 840X75TGD 7, 61
✧ MTC 960X55TGD 7, 61
➢ MTI 85W100GC 7, 61
➢ MTI 145WX100GD 7, 61
➢ MTI 200WX75GD 7, 61
MUBW 10-06A6K 23
MUBW 10-06A7 23
MUBW 10-12A7 23
MUBW 15-06A6K 23
MUBW 15-06A7 23
MUBW 15-12A6K 23
MUBW 15-12A7 23
MUBW 15-12T7 23
MUBW 20-06A6K 23
MUBW 20-06A7 23
MUBW 25-06A6K 23
MUBW 25-12A7 23
MUBW 25-12T7 23
MUBW 30-06A7 23
MUBW 30-12A6K 23
MUBW 35-06A6K 23
MUBW 35-12A7 23
MUBW 35-12A8 24
MUBW 40-12T7 23
MUBW 45-12T6K 23
MUBW 50-06A7 23
MUBW 50-06A8 24
MUBW 50-12A8 24
MUBW 50-12T8 24
MUBW 50-17T8 24
MUBW 75-06A8 24
MUBW 75-12T8 24
MUBW 75-17T8 24
MUBW 100-06A8 24
MWI 15-12A6K 25
MWI 15-12A7 26
MWI 25-12A7 26
MWI 25-12A7T 26
MWI 30-06A7 26
➢ MWI 30-06A7-S 31
MWI 30-06A7T 26
MWI 35-12A7 26
MWI 35-12A7T 26
MWI 35-12T7T 26
MWI 45-12T6K 25
MWI 50-06A7 26
➢ MWI 50-06A7-S 31
MWI 50-06A7T 26
MWI 50-12A7 26
MWI 50-12A7T 26
MWI 50-12T7T 26
MWI 60-12T6K 25
MWI 75-06A7 26
MWI 75-06A7T 26
MWI 75-12A8 27
MWI 75-12A8T 27
MWI 75-12T7T 26
MWI 75-12T8T 27
MWI 80-12T6K 25
MWI 100-06A8 27
MWI 100-06A8T 27
MWI 100-12A8 27
MWI 100-12A8T 27
MWI 100-12T8T 27
MWI 100-17E8T 27
MWI 150-06A8 27
MWI 150-06A8T 27
MWI 150-12T8T 27
MWI 150-17E8T 27
MWI 200-06A8 27
MWI 200-06A8T 27
MWI 450-17T9 30
U
UGB 3132AD 97
UGB 6124AG 97
UGD 6123AG 97
UGD 8124AG 97
UGE 0221AY4 97
UGE 0421AY4 97
UGE 1112AY4 97
UGE 3126AY4 97
V
VBE 17-06NO7 89
VBE 17-12NO7 89
VBE 20-20NO1 89
VBE 26-06NO7 89
VBE 26-12NO7 89
VBE 55-06NO7 89
VBE 55-12NO7 89
VBE 60-06A 89
VBE 100-06NO7 89
VBE 100-12NO7 89
VBH 40-05B 63
VBO 13-08NO2 90
VBO 13-12AO2 90
VBO 13-12NO2 90
VBO 13-16AO2 90
VBO 13-16NO2 90
VBO 20-08NO2 90
VBO 20-12AO2 90
VBO 20-12NO2 90
VBO 20-16AO2 90
VBO 20-16NO2 90
VBO 21-08NO7 90
VBO 21-12NO7 90
VBO 22-08NO8 90
VBO 22-12NO8 90
VBO 22-16NO8 90
VBO 22-18NO8 90
VBO 25-08NO2 90
VBO 25-12AO2 90
VBO 25-12NO2 90
VBO 25-16AO2 90
VBO 25-16NO2 90
VBO 30-08NO7 90
VBO 30-12NO7 90
VBO 30-16NO7 90
VBO 30-18NO7 90
VBO 36-08NO8 90
VBO 36-12NO8 90
VBO 36-16NO8 90
VBO 36-18NO8 90
VBO 40-08NO6 90
VBO 40-12NO6 90
VBO 40-16NO6 90
VBO 50-08NO7 90
VBO 50-12NO7 90
VBO 50-16NO7 90
VBO 50-18NO7 90
VBO 52-08NO7 90
VBO 52-12NO7 90
VBO 52-16NO7 90
VBO 52-18NO7 90
VBO 54-08NO7 90
VBO 54-12NO7 90
VBO 54-16NO7 90
VBO 68-08NO7 90
VBO 68-12NO7 90
VBO 68-16NO7 90
VBO 72-08NO7 90
VBO 72-12NO7 90
VBO 72-16NO7 90
VBO 78-08NO7 91
VBO 78-12NO7 91
VBO 78-16NO7 91
VBO 88-08NO7 91
VBO 88-12NO7 91
VBO 88-16NO7 91
VBO 105-08NO7 91
VBO 105-12NO7 91
VBO 105-16NO7 91
VBO 125-08NO7 91
VBO 125-12NO7 91
VBO 125-16NO7 91
VBO 130-08NO7 91
VBO 130-12NO7 91
VBO 130-16NO7 91
VBO 130-18NO7 91
VBO 160-08NO7 91
VBO 160-12NO7 91
VBO 160-16NO7 91
VBO 160-18NO7 91
VCO 132-08io7 87
VCO 132-12io7 87
VCO 132-14io7 87
VCO 132-16io7 87
VCO 132-18io7 87
VCO 180-08io7 87
VCO 180-12io7 87
VCO 180-14io7 87
VCO 180-16io7 87
VCO 180-18io7 87
VGB 0124AY7a 97
VGF 0136AB 97
VGF 0136AH 97
VGO 36-16io7 91
VHF 15-08io5 91
VHF 15-12io5 91
VHF 15-14io5 91
VHF 15-16io5 91
VHF 25-08io7 91
VHF 25-12io7 91
VHF 28-08io5 91
VHF 28-12io5 91
VHF 28-14io5 91
VHF 28-16io5 91
VHF 36-08io5 91
VHF 36-12io5 91
VHF 36-14io5 91
VHF 36-16io5 91
VHFD 16-08io1 91
VHFD 16-12io1 91
VHFD 16-16io1 91
VHFD 29-08io1 91
VHFD 29-12io1 91
VHFD 29-16io1 91
VHFD 37-08io1 91
VHFD 37-12io1 91
VHFD 37-16io1 91
VKM 40-06P1 63
○ VMK 90-02T2 62
○ VMM 45-02F 62
○ VMM 90-09F 62
➢ VMM 90-09P 62
○ VMM 300-03F 62
○ VMM 650-01F 62
○ VMO 60-05F 62
○ VMO 550-01F 62
○ VMO 580-02F 62
○ VMO 650-01F 62
VMO 1200-01F 62
VTO 39-08ho7 95
VTO 39-12ho7 95
VUB 72-12NOXT 94
VUB 72-16NOXT 94
VUB 116-16NOXT 94
VUB 120-16NOX 94
VUB 120-16NOXT 94
VUB 135-22NO1 94
VUB 145-16NOXT 94
VUB 160-16NOX 94
VUB 160-16NOXT 94
VUC 36-12go2 95
VUC 36-16go2 95
VUE 22-06NO7 89
VUE 22-12NO7 89
VUE 30-20NO1 89

Alphanumeric Index

➢ New
○ Not for new design
✧ Under development

VUE 35-06NO7 89
VUE 35-12NO7 89
VUE 50-12NO1 89
VUE 75-06NO7 89
VUE 75-12NO7 89
VUE 130-06NO7 89
VUE 130-12NO7 89
VUI 30-12N1 64
VUI 72-16NOXT 94
○ VUM 24-05N 64
VUM 25-05E 64
○ VUM 33-05N 64
➢ VUM 33-06PH 64
VUM 85-05A 64
VUO 22-08NO1 92
VUO 22-12NO1 92
VUO 22-14NO1 92
VUO 22-16NO1 92
VUO 22-18NO1 92
VUO 25-08NO8 92
VUO 25-12NO8 92
VUO 25-14NO8 92
VUO 25-16NO8 92
VUO 25-18NO8 92
VUO 28-08NO7 92
VUO 28-12NO7 92
VUO 30-08NO3 92
VUO 30-12NO3 92
VUO 30-14NO3 92
VUO 30-16NO3 92
VUO 30-18NO3 92
VUO 34-08NO1 92
VUO 34-12NO1 92
VUO 34-14NO1 92
VUO 34-16NO1 92
VUO 34-18NO1 92
VUO 35-08NO7 92
VUO 35-12NO7 92
VUO 35-14NO7 92
VUO 35-16NO7 92
VUO 35-18NO7 92
VUO 36-08NO8 92
VUO 36-12NO8 92
VUO 36-14NO8 92
VUO 36-16NO8 92
VUO 36-18NO8 92
VUO 50-08NO3 92
VUO 50-12NO3 92
VUO 50-14NO3 92
VUO 50-16NO3 92
VUO 50-18NO3 92
VUO 52-08NO1 92
VUO 52-12NO1 92
VUO 52-14NO1 92
VUO 52-16NO1 92
VUO 52-18NO1 92
VUO 52-20NO1 92
VUO 52-22NO1 92
VUO 55-12NO7 92
VUO 55-14NO7 92
VUO 55-16NO7 92
VUO 55-18NO7 92
VUO 60-12NO3 92
VUO 60-14NO3 92
VUO 60-16NO3 92
VUO 60-18NO3 92
VUO 62-08NO7 93
VUO 62-12NO7 93
VUO 62-14NO7 93
VUO 62-16NO7 93
VUO 62-18NO7 93
➢ VUO 64-16NO7 93
VUO 68-08NO7 93
VUO 68-12NO7 93
VUO 68-14NO7 93
VUO 68-16NO7 93
○ VUO 70-16NO7 93
VUO 80-08NO1 93
VUO 80-12NO1 93
VUO 80-14NO1 93
VUO 80-16NO1 93
VUO 80-18NO1 93
VUO 82-08NO7 93
VUO 82-12NO7 93
VUO 82-14NO7 93
VUO 82-16NO7 93
VUO 82-18NO7 93
➢ VUO 84-16NO7 93
VUO 86-08NO7 93
VUO 86-12NO7 93
VUO 86-14NO7 93
VUO 86-16NO7 93
VUO 98-08NO7 93
VUO 98-12NO7 93
VUO 98-14NO7 93
VUO 98-16NO7 93
VUO 105-12NO7 93
VUO 105-14NO7 93
VUO 105-16NO7 93
VUO 105-18NO7 93
VUO 110-08NO7 93
VUO 110-12NO7 93
VUO 110-14NO7 93
VUO 110-16NO7 93
VUO 110-18NO7 93
○ VUO 120-12NO1 93
➢ VUO 120-12NO2T 93
○ VUO 120-16NO1 93
➢ VUO 120-16NO2T 93
VUO 121-16NO1 93
VUO 122-08NO7 93
VUO 122-12NO7 93
VUO 122-14NO7 93
VUO 122-16NO7 93
VUO 125-12NO7 93
VUO 125-14NO7 93
VUO 125-16NO7 93
VUO 125-18NO7 93
VUO 160-08NO7 94
VUO 160-12NO7 94
VUO 160-14NO7 94
VUO 160-16NO7 94
VUO 160-18NO7 94
VUO 162-16NO7 94
VUO 190-08NO7 94
VUO 190-12NO7 94
VUO 190-14NO7 94
VUO 190-16NO7 94
VUO 190-18NO7 94
VUO 192-16NO7 94
VVZ 12-12io1 95
VVZ 12-16io1 95
VVZ 24-12io1 95
VVZ 24-16io1 95
VVZ 39-08ho7 95
VVZ 39-12ho7 95
VVZ 40-12io1 95
VVZ 40-16io1 95
VVZ 110-12io7 95
VVZ 175-12io7 95
VVZ 175-16io7 95
VVZB 120-16ioX 94
VVZB 135-16ioXT 94
VVZB 170-16ioXT 94
○ VVZF 70-16io7 95
VW 2x30-12io1 96
VW 2x30-14io1 96
VW 2x30-16io1 96
VW 2x45-12io1 96
VW 2x45-14io1 96
VW 2x45-16io1 96
VW 2x60-12io1 96
VW 2x60-14io1 96
VW 2x60-16io1 96
VWO 35-08ho7 96
VWO 35-12ho7 96
VWO 85-12io1 96
VWO 85-14io1 96
VWO 85-16io1 96
VWO 140-12io1 96
VWO 140-14io1 96
VWO 140-16io1 96

IXYS ICD

CPC1580 105
CPC1590 105
CPC1706Y 101
CPC1708J 101
CPC1709J 101
CPC1718J 101
CPC1726Y 101
CPC1727J 101
CPC1777J 101
CPC1779J 101
CPC1786J 101
CPC1788J 101
CPC1906Y 101
CPC1907B 101
CPC1908J 101
CPC1909J 101
CPC1916Y 101
CPC1918J 101
CPC1926Y 101
CPC1927J 101
CPC1943 102
CPC1945G 102
CPC1945Y 102
CPC1961 102
CPC1963 102
CPC1964B 102
CPC1965G 102
CPC1965Y 102
CPC1966 102
➢ CPC1966B 102
CPC1967J 101
CPC1968J 101
CPC1972 102
CPC1973Y 101
CPC1976 102
CPC1977J 101
CPC1978J 101
CPC1979J 101
CPC1981Y 101
CPC1983Y 101
CPC1983YE 101
CPC1986J 101
CPC1988J 101
CPC1998 102
➢ CPC40055 102
➢ CPC44055 102
CPC9909 106
IX2127 104
➢ IX3120 104
IX4423 103
IX4424 103
IX4425 103
IX4426 103
IX4427 103
IX4428 103
IXD_602 103
IXD_604 103
IXD_609 103
IXD_614 103
IXD_630 103
IXD_630M 103
MXHV9910 106
PD1201 102
PD2401 102
PD2601 102
PM1204 102
PM1205 102
PM1206 102
PS1201 102
PS2401 102
PS2601 102

IXYS UK

A0516YC240 133
A0516YC280 133
A1237NC240 133
A1237NC280 133
C0044BG400SBA 136
C0044BG400SBB 136
C0044BG400SBC 136
C0044BG400SBD 136
C0044BG400SBE 136
C0044BG400SBF 136
C0044BG400SBG 136
C0044BG400SBH 136
C0044BG400SBJ 136
C0044BG400SBK 136
C0044BG400SBL 136
C0044BG400SBM 136
C0044BG400SBN 136
C0044BG400SBP 136
C0044BG400SBQ 136
C0044BG400SBR 136
C0044BG400SBS 136
C0044BG400SBT 136
C0044BG400SBV 136
E0170YH40C 117
E0170YH45C 117
E0280YH20C 117
E0280YH25C 117
E0460QC40C 117
E0460QC45C 117
E0660NC40C 117
E0660NC45C 117
E0660NH40C 117
E0660NH45C 117
E0800QC20C 117
E0800QC25C 117
E1200NC20C 117
E1200NC25C 117
E1200NH20C 117
E1200NH25C 117
E1300VF40C 117
E1300VF45C 117
E1500NC36P 117
E1500NC42P 117
E1500NC48P 117
E1500NH36P 117
E1500NH42P 117
E1500NH48P 117
E2000NC140 117
E2000NC170 117
E2000NH140 117
E2000NH170 117
E2250VF20C 117
E2250VF25C 117
E2400TC40C 117
E2400TC45C 117
E4000TC20C 117
E4000TC25C 117
E53.H59-102T1W 154
E53.H59-123T1W 154
E53.H59-152T1W 154
E53.H59-153T1W 154
E53.H59-252T1W 154
E53.H59-303T1W 154
E53.H59-332T1W 154
E53.H59-333T1W 154
E53.H59-471T1W 154
E53.H59-472T1W 154
E53.H59-503T1W 154
E53.H59-802T1W 154
E53.M59-103T2W 154
E53.M59-163T2W 154
E53.M59-252T2W 154
E53.M59-253T2W 154
E53.M59-332T2W 154
E53.M59-602T2W 154
E53.M59-802T2W 154
E53.N51-303H1W 154
E53.N51-383H1W 154
E53.N51-503H1W 154
E53.N68-403H1W 154
E53.N68-503H1W 154
E53.P59-103T2W 154

Alphanumeric Index

➢ New
○ Not for new design
✧ Under development

E53.P59-143T2W 154
E53.P59-163T2W 154
E53.P59-303T2W 154
E53.P59-402T2W 154
E53.P59-503T2W 154
E53.P59-682T2W 154
E53.P59-752T2W 154
E53.Q59-103T2W 154
E53.Q59-143T2W 154
E53.Q59-153T2W 154
E53.Q59-183T2W 154
E53.Q59-223T2W 154
E53.Q59-403T2W 154
E53.Q59-502T2W 154
E53.Q59-602T2W 154
E53.Q59-802T2W 154
E53.R11-302T2W 154
E53.R11-402T2W 154
E53.R60-123T2W 154
E53.R60-183T2W 154
E53.R60-243T2W 154
E53.R60-333T2W 154
E53.R60-503T2W 154
E53.R60-702T2W 154
F0240YC250 116
F0240YC300 116
F0240YH250 116
F0240YH300 116
F0300WC140 116
F0300WC180 116
F0800LC140 116
F0800LC180 116
F0900VC450 116
F0900VC520 116
F0900VF450 116
F0900VF520 116
F1000LC080 116
F1000LC120 116
F1300NC45P 116
F1300NC50P 116
F1300NC55P 116
F1300NH45P 116
F1300NH50P 116
F1300NH55P 116
F1400NC140 116
F1400NC180 116
F1400ND140 116
F1400ND180 116
F1500NC200 116
F1500NC250 116
F1600NC080 116
F1600NC120 116
G1000NC450 134
G1000QC250 134
G1000QC450 134
G2000HF250 134
G2000HF450 134
G2500HF250 134
G3000TF250 134
G3000TF450 134
G4000EC450 134
H0500KC200 134
H0500KC20Y 134
H0500KC25D 134
H0500KC25Y 134
H0700KC140 134
H0700KC14Y 134
H0700KC17D 134
H0700KC17Y 134
H1200NC200 134
H1200NC20Y 134
H1200NC25D 134
H1200NC25Y 134
K0349LC600 124
K0349LC650 124
K0349LG600 124
K0349LG650 124
K0443LC600 124
K0443LC650 124
K0443LG600 124
K0443LG650 124
K0566LC440 124
K0566LC480 124
K0566LC520 124
K0566LG440 124
K0566LG480 124
K0566LG520 124
➢ K0620QA600 124
➢ K0620QA650 124
➢ K0620QE600 124
➢ K0620QE650 124
K0682LC360 124
K0682LC420 124
K0682LG360 124
K0682LG420 124
K0769NC600 124
K0769NC650 124
K0769NG600 124
K0769NG650 124
K0885NC450 124
K0885NC480 124
K0885NC520 124
K0885NG450 124
K0885NG480 124
K0885NG520 124
K0890NC360 124
K0890NC420 124
➢ K1000MA600 124
➢ K1000MA650 124
➢ K1000ME600 124
➢ K1000ME650 124
K1120NC360 124
K1120NC420 124
K1120NG360 124
K1120NG420 124
K1121NC320 124
K1121NC360 124
K1197NC300 124
K1197NC320 124
K1351VC600 124
K1351VC650 124
K1351VF600 124
K1351VF650 124
K1947ZC400 124
K1947ZC450 124
K1947ZD400 124
K1947ZD450 124
K2065VC360 125
K2065VC420 125
K2065VF360 125
K2065VF420 125
K2095ZC360 125
K2095ZC420 125
K2095ZD360 125
K2095ZD420 125
K2359TC600 125
K2359TC650 125
K2359TD600 125
K2359TD650 125
K2623TC450 125
K2623TC480 125
K2623TC520 125
K2623TD450 125
K2623TD480 125
K2623TD520 125
K2960TC450 125
K2960TC480 125
K2960TC520 125
K2960TD450 125
K2960TD480 125
K2960TD520 125
K2973FC600 125
K2973FC650 125
K2973FD600 125
K2973FD650 125
K3207EC450 125
K3207EC480 125
K3207EC520 125
K3362TC360 125
K3362TC420 125
K3362TD360 125
K3362TD420 125
K3503FC450 125
K3503FC480 125
K3503FC520 125
K3503FD450 125
K3503FD480 125
K3503FD520 125
L0001HC600XXX 147
L0001NC600XXX 147
L0001QC600XXX 147
L0001TC600XXX 147
L0001YC600XXX 147
L0001ZF600XXX 147
M0130RL200 113
M0130RL250 113
M0130SL200 113
M0130SL250 113
M0139RL120 113
M0139RL180 113
M0139SL120 113
M0139SL180 113
M0225YH360 114
M0225YH450 114
M0268RC200 113
M0268RC250 113
M0268RJ200 113
M0268RJ250 113
M0268SC200 113
M0268SC250 113
M0268SJ200 113
M0268SJ250 113
M0280RC200 113
M0280RC250 113
M0280RJ200 113
M0280RJ250 113
M0280SC200 113
M0280SC250 113
M0280SJ200 113
M0280SJ250 113
M0310YH300 114
M0310YH350 114
M0334RC160 113
M0334RC200 113
M0334RJ160 113
M0334RJ200 113
M0334SC160 113
M0334SC200 113
M0334SJ160 113
M0334SJ200 113
M0336RA120 113
M0336RA140 113
M0336SA120 113
M0336SA140 113
M0347WC200 114
M0347WC250 114
M0358WC120 114
M0358WC180 114
M0367WC220 114
M0367WC280 114
M0371YH350 114
M0371YH450 114
M0433WC120 114
M0433WC160 114
M0433WC200 114
M0437WC080 114
M0437WC140 114
M0451YC160 114
M0451YC200 114
M0588LC400 112
M0588LC450 112
M0659LC400 114
M0659LC450 114
M0710LC560 114
M0710LC600 114
M0736LC400 114
M0736LC450 114
M0759YC120 114
M0759YC160 114
M0759YH120 114
M0759YH160 114
M0790YC200 112
M0790YC250 112
M0790YH200 112
M0790YH250 112
M0859LC140 114
M0859LC160 114
M0863LC260 114
M0863LC300 114
M0863LC360 114
M0872LC140 114
M0872LC180 114
M0872LC210 114
M0914LC200 112
M0914LC250 112
M0955LC200 114
M0955LC250 114
M1010NC400 112
M1010NC450 112
M1010ND400 112
M1010ND450 112
M1022LC120 114
M1022LC160 114
M1022LC200 114
M1080LC100 115
M1080LC120 115
M1102NC500 115
M1102NC600 115
M1102ND500 115
M1102ND600 115
M1104NC400 115
M1104NC450 115
M1104ND400 115
M1104ND450 115
M1163NC400 112
M1163NC450 112
M1163ND400 112
M1163ND450 112
M1242NC260 115
M1242NC360 115
M1242ND260 115
M1242ND360 115
M1494NC180 115
M1494NC250 115
M1494ND180 115
M1494ND250 115
M1502NC200 112
M1502NC250 112
M1502ND200 112
M1502ND250 112
M1565VC360 115
M1565VC400 115
M1565VC450 115
M1565VF360 115
M1565VF400 115
M1565VF450 115
M1583VC400 112
M1583VC450 112
M1583VF400 112
M1583VF450 112
M1609NC200 112
M1609NC260 112
M1609ND200 112
M1609ND260 112
M1858NC120 115
M1858NC160 115
M1858ND120 115
M1858ND160 115
M2273VC300 112
M2273VC360 112
M2273VF300 112
M2273VF360 112
M2322ZC300 115
M2322ZC400 115
M2322ZD300 115
M2322ZD400 115
M2408NC020 112
M2408NC060 112
M2408ND020 112
M2408ND060 112
M2413VC200 115
M2413VC250 115
M2413VF200 115
M2413VF250 115
M2639ZC420 112
M2639ZC450 112
M2639ZD420 112
M2639ZD450 112
M2698ZC250 112
M2698ZC280 112
M2698ZC350 112
M2698ZD250 112
M2698ZD280 112
M2698ZD350 112
M2837VC180 112
M2837VC250 112

Alphanumeric Index

➢ New
○ Not for new design
✧ Under development

M2837VF180 112
M2837VF250 112
M3770ZC200 112
M3770ZC240 112
M3770ZC300 112
M3770ZD200 112
M3770ZD240 112
M3770ZD300 112
MCA600-22io1W 140
MCA700-14io1W 140
MCA700-18io1W 140
MCC320-30io2 137
MCC320-36io2 137
MCC431-20io2 137
MCC431-22io2 137
MCC431-24io2 137
○ MCC500-14io1 137
○ MCC500-18io1 137
○ MCC500-22io1 137
➢ MCC500-30io7 137
➢ MCC500-36io7 137
MCC501-12io2 137
MCC501-14io2 137
MCC501-16io2 137
MCC501-18io2 137
➢ MCC552-12io2 137
➢ MCC552-14io2 137
➢ MCC552-16io2 137
➢ MCC580-28io7 137
MCC600-22io1W 140
➢ MCC650-24io7 137
MCC700-14io1W 140
MCC700-18io1W 140
➢ MCC720-14io7 137
➢ MCC720-18io7 137
MCD320-30io2 138
MCD320-36io2 138
MCD431-20io2 138
MCD431-22io2 138
MCD431-24io2 138
○ MCD500-14io1 138
○ MCD500-18io1 138
○ MCD500-22io1 138
➢ MCD500-30io7 138
➢ MCD500-36io7 138
MCD501-12io2 138
MCD501-14io2 138
MCD501-16io2 138
MCD501-18io2 138
➢ MCD552-12io2 138
➢ MCD552-14io2 138
➢ MCD552-16io2 138
➢ MCD580-28io7 138
MCD600-22io1W 140
➢ MCD650-24io7 138
MCD700-14io1W 140
MCD700-18io1W 140
➢ MCD720-14io7 138
➢ MCD720-18io7 138
○ MCK500-14io1 137
○ MCK500-18io1 137
○ MCK500-22io1 137
MCK600-22io1W 140
MCK700-14io1W 140
MCK700-18io1W 140
MCO741-22io1 137
MCO801-14io1 137
MCO801-18io1 137
➢ MCR500-30io7 137
➢ MCR500-36io7 137
➢ MCR580-28io7 137
➢ MCR650-24io7 137
➢ MCR720-14io7 137
➢ MCR720-18io7 137
➢ MDA1080-18N7 139
➢ MDA1080-24N7 139
➢ MDA1080-28N7 139
○ MDA600-14N1 139
○ MDA600-18N1 139
○ MDA600-22N1 139
➢ MDA630-30N2 139
➢ MDA630-36N2 139
➢ MDA710-22N2 139
➢ MDA710-26N2 139
➢ MDA810-12N2 139
➢ MDA810-16N2 139
➢ MDA810-18N2 139
MDA950-14N1W 140
MDA950-18N1W 140
MDA950-22N1W 140
MDC320-30io2 138
MDC320-36io2 138
MDC431-20io2 138
MDC431-22io2 138
MDC431-24io2 138
○ MDC500-14io1 138
○ MDC500-18io1 138
○ MDC500-22io1 138
➢ MDC500-30io7 138
➢ MDC500-36io7 138
MDC501-12io2 138
MDC501-14io2 138
MDC501-16io2 138
MDC501-18io2 138
➢ MDC552-12io2 138
➢ MDC552-14io2 138
➢ MDC552-16io2 138
➢ MDC580-28io7 138
MDC600-22io1W 140
➢ MDC650-24io7 138
MDC700-14io1W 140
MDC700-18io1W 140
➢ MDC720-14io7 138
➢ MDC720-18io7 138
➢ MDD1080-18N7 139
➢ MDD1080-24N7 139
➢ MDD1080-28N7 139
○ MDD600-14N1 139
○ MDD600-18N1 139
○ MDD600-22N1 139
MDD630-30N2 139
MDD630-36N2 139
MDD710-22N2 139
MDD710-26N2 139
MDD810-12N2 139
MDD810-16N2 139
MDD810-18N2 139
MDD950-14N1W 140
MDD950-18N1W 140
MDD950-22N1W 140
➢ MDK1080-18N7 139
➢ MDK1080-24N7 139
➢ MDK1080-28N7 139
○ MDK600-14N1 139
○ MDK600-18N1 139
○ MDK600-22N1 139
➢ MDK630-30N2 139
➢ MDK630-36N2 139
➢ MDK710-22N2 139
➢ MDK710-26N2 139
➢ MDK810-12N2 139
➢ MDK810-16N2 139
➢ MDK810-18N2 139
MDK950-14N1W 140
MDK950-18N1W 140
MDK950-22N1W 140
➢ MDO1201-14N1 139
➢ MDO1201-18N1 139
➢ MDO1201-22N1 139
N0131SH120 118
N0131SH160 118
N0180SH120 118
N0180SH160 118
○ N0255WC120 119
○ N0255WC160 119
N0290SC120 118
N0290SC160 118
N0335SC120 118
N0335SC160 118
○ N0392WC120 119
○ N0392WC160 119
N0416SC040 118
N0416SC080 118
➢ N0465WN140 119
➢ N0465WN160 119
➢ N0530YN220 119
➢ N0530YN250 119
○ N0606YS200 119
○ N0606YS240 119
○ N0606YS250 119
N0616LC400 119
N0616LC450 119
N0634LC380 119
N0634LC420 119
N0646LC300 119
N0646LC360 119
○ N0676YS120 119
○ N0676YS180 119
○ N0734YS120 119
○ N0734YS160 119
○ N0782YS120 119
○ N0782YS160 119
➢ N0795YN140 119
➢ N0795YN180 119
N0845NC600 119
N0845NC650 119
N0845NG600 119
N0845NG650 119
N0882NC400 119
N0882NC450 119
N0910LC200 119
N0910LC260 119
N1010NC300 119
N1010NC380 119
➢ N1075LN180 119
○ N1114LC120 119
○ N1114LC180 119
N1132NC300 119
N1132NC320 119
➢ N1140LN140 119
N1159NC380 119
N1159NC420 119
N1174JK200 119
N1174JK220 119
N1263JK160 119
N1263JK180 119
N1265LC120 119
○ N1265LC160 119
N1314NC300 120
N1314NC360 120
N1351VC400 120
N1351VC450 120
N1351VF400 120
N1351VF450 120
N1366JK080 120
N1366JK120 120
N1366JK140 120
N1449QL200 120
N1449QL220 120
N1467NC200 120
N1467NC260 120
N1479NC240 120
➢ N1479NC24R 120
N1479NC300 120
➢ N1479NC30R 120
N1547NC160 120
N1547NC200 120
N1581QL160 120
N1581QL180 120
N1588NC200 120
N1588NC260 120
N1651QK200 120
N1651QK220 120
N1661VC300 120
N1661VC360 120
N1661VF300 120
N1661VF360 120
N1712VC240 120
N1712VC300 120
N1712VF240 120
N1712VF300 120
N1718NC120 120
N1718NC180 120
N1718NC200 120
N1802NC120 120
N1802NC160 120
N1806QK160 120
N1806QK180 120
N1817QL080 120
N1817QL160 120
N1817QL180 120
N2015ML200 120
N2015ML220 120
N2046NC120 120
N2046NC160 120
N2083QK080 121
N2083QK120 121
N2083QK140 121
N2086NC060 121
N2086NC100 121
N2154JK020 121
N2154JK040 121
N2154JK060 121
N2172ZC400 121
N2172ZC450 121
N2172ZD400 121
N2172ZD450 121
N2191ML160 121
N2191ML180 121
N2293VC180 121
N2293VC220 121
N2293VF180 121
N2293VF220 121
N2367MK200 121
N2367MK220 121
N2418ZC300 121
N2418ZC360 121
N2418ZD300 121
N2418ZD360 121
N2500VC120 121
N2500VC160 121
N2500VF120 121
N2500VF160 121
N2520ML080 121
N2520ML120 121
N2520ML140 121
N2543ZC240 121
N2543ZC300 121
N2543ZD240 121
N2543ZD300 121
N2593MK160 121
N2593MK180 121
➢ N2825TE400 121
➢ N2825TE450 121
➢ N2825TJ400 121
➢ N2825TJ450 121
➢ N2900QL020 121
➢ N2900QL040 121
➢ N2900QL060 121
N3012ZC200 121
N3012ZC260 121
N3012ZD200 121
N3012ZD260 121
N3022MK080 122
N3022MK120 122
N3022MK140 122
N3029ZC240 122
N3029ZC280 122
N3029ZD240 122
N3029ZD280 122
N3229QK020 122
N3229QK040 122
N3229QK060 122
○ N3493TC360 122
○ N3493TC420 122
○ N3493TD360 122
○ N3493TD420 122
N3533ZC180 122
N3533ZC220 122
N3533ZD180 122
N3533ZD220 122
N3597ML020 122
N3597ML040 122
N3597ML060 122
➢ N3790TE240 122
➢ N3790TE280 122
➢ N3790TJ240 122
➢ N3790TJ280 122
N3839TC300 122
N3839TC350 122
N3839TD300 122
N3839TD350 122
N3880ZD160 122
N3880ZD180 122
N3904HK200 122
N3904HK220 122

Alphanumeric Index

➢ New
○ Not for new design
✧ Under development

N3930ZC120 122
N3930ZC160 122
N3930ZD120 122
N3930ZD160 122
N4085ZC080 122
N4085ZC120 122
N4085ZD080 122
N4085ZD120 122
N4151FC360 122
N4151FC420 122
N4151FD360 122
N4151FD420 122
N4316MK020 122
N4316MK040 122
N4316MK060 122
➢ N4340TE180 123
➢ N4340TE220 123
➢ N4340TJ180 123
➢ N4340TJ220 123
N4472HK160 123
N4472HK180 123
N4803FC300 123
N4803FC350 123
N4803FD300 123
N4803FD350 123
N5177FC200 123
N5177FC280 123
N5177FD200 123
N5177FD280 123
N5946FC180 123
N5946FC220 123
N5946FD180 123
N5946FD220 123
N6012ZD020 123
N6012ZD040 123
N6012ZD060 123
N6974HK020 123
N6974HK040 123
N6974HK060 123
P0128SH10C 126
P0128SH10D 126
P0128SH10E 126
P0128SH12C 126
P0128SH12D 126
P0128SH12E 126
P0128SJ10C 126
P0128SJ10D 126
P0128SJ10E 126
P0128SJ12C 126
P0128SJ12D 126
P0128SJ12E 126
P0248SC12D 126
P0248SC12E 126
P0273SC12D 126
P0273SC12E 126
P0273SC12F 126
P0295WC12D 127
P0295WC12E 127
P0306SC08A 126
P0306SC08B 126
P0306SC08C 126
P0311SC12E 126
P0311SC12F 126
P0327WC08C 127
P0327WC08D 127
P0327WC08E 127
P0327WC08F 127
P0327WC12C 127
P0327WC12D 127
P0327WC12E 127
P0327WC12F 127
P0330SC04A 126
P0330SC04C 126
P0330SC06A 126
P0330SC06C 126
P0330SC08A 126
P0330SC08C 126
P0366WC04A 127
P0366WC04B 127
P0366WC04C 127
P0366WC06A 127
P0366WC06B 127
P0366WC06C 127
P0366WC08A 127
P0366WC08B 127
P0366WC08C 127
P0367WC12E 127
P0367WC12F 127
P0389WC04B 127
P0389WC04C 127
P0389WC08B 127
P0389WC08C 127
P0431SC04B 126
P0431SC04C 126
P0431SC06B 126
P0431SC06C 126
P0515WC04B 127
P0515WC04C 127
P0515WC04D 127
P0515WC06B 127
P0515WC06C 127
P0515WC06D 127
P0838LC06B 127
P0838LC06C 127
P0848YS04B 127
P0848YS04C 127
P0848YS06B 127
P0848YS06C 127
P1007LC08D 127
P1007LC08E 127
P1007LC08F 127
P1007LC12D 127
P1007LC12E 127
P1007LC12F 127
R0472YS12E 128
R0472YS12F 128
R0472YS16E 128
R0472YS16F 128
R0487YS12D 128
R0487YS12E 128
R0487YS14D 128
R0487YS14E 128
R0577YS12C 128
R0577YS12D 128
R0577YS12E 128
R0633YS12D 128
R0633YS12E 128
R0633YS12F 128
R0717LC14G 128
➢ R0717LC18G 128
R0736LC20J 128
R0736LC20K 128
R0736LC22J 128
R0736LC22K 128
R0736LC25J 128
R0736LC25K 128
R0736LC25L 128
R0736LC25M 128
R0809LC10A 128
R0809LC10B 128
R0830LC12C 128
R0830LC12D 128
R0830LC12E 128
R0830LC12F 128
R0830LC14C 128
R0830LC14D 128
R0830LC14E 128
R0830LC14F 128
R0878LC18K 128
R0878LC18L 128
R0878LC18M 128
R0878LC20K 128
R0878LC20L 128
R0878LC20M 128
R0878LC21K 128
R0878LC21L 128
R0878LC21M 128
R0929LC10A 128
R0929LC10B 128
R0929LC10C 128
R0929LC12A 128
R0929LC12B 128
R0929LC12C 128
R0929LC12D 128
R0929LC12E 128
R0964LC10C 128
R0964LC10D 128
R0964LC10E 128
R0964LC12C 128
R0964LC12D 129
R0964LC12E 129
R0990LC08A 129
R0990LC08B 129
R0990LC08C 129
R1124NC18J 129
R1124NC18K 129
R1124NC18L 129
R1124NC18M 129
R1124NC20J 129
R1124NC20K 129
R1124NC20L 129
R1124NC20M 129
R1124NC21J 129
R1124NC21K 129
R1124NC21L 129
R1124NC21M 129
R1127NC32P 129
R1127NC32R 129
R1127NC32S 129
R1127NC32T 129
R1127NC34R 129
R1127NC34S 129
R1127NC34T 129
R1127NC36R 129
R1127NC36S 129
R1127NC36T 129
R1158NC26N 129
R1158NC26P 129
R1158NC26T 129
R1178NC14E 129
R1178NC14F 129
R1178NC14G 129
R1211NC12C 129
R1211NC12D 129
R1211NC12E 129
R1271NC12B 129
R1271NC12C 129
R1271NC12D 129
R1271NC12E 129
R1275NC18J 129
R1275NC18K 129
R1275NC18L 129
R1275NC18M 129
R1275NC20J 129
R1275NC20K 129
R1275NC20L 129
R1275NC20M 129
R1275NC21J 129
R1275NC21K 129
R1275NC21L 129
R1275NC21M 129
R1279NC22J 129
R1279NC22K 129
R1279NC22L 129
R1279NC22M 129
R1279NC25J 129
R1279NC25K 129
R1279NC25L 130
R1279NC25M 130
R1280NC21J 130
R1280NC21K 130
R1280NC21L 130
R1280NC21M 130
R1280NC22J 130
R1280NC22K 130
R1280NC22L 130
R1280NC22M 130
R1280NC25J 130
R1280NC25K 130
R1280NC25L 130
R1280NC25M 130
R1331NC10B 130
R1331NC10C 130
R1331NC10D 130
R1331NC12B 130
R1331NC12C 130
R1331NC12D 130
R1446NC12C 130
R1446NC12E 130
R1446NC12F 130
R1446NC12G 130
R1448NC14H 130
R1448NC14J 130
R1448NC18H 130
R1448NC18J 130
R1448NC20H 130
R1448NC20J 130
R1448NC20K 130
R1448NC20L 130
R1448NC20M 130
R1700MC18E 130
R1700MC18F 130
R1700MC18G 130
R1700MC18H 130
R1700MC18J 130
R1700MC21E 130
R1700MC21F 130
R1700MC21G 130
R1700MC21H 130
R1700MC21J 130
R2475ZC28M 130
R2475ZC28N 130
R2475ZC28R 130
R2475ZD28M 130
R2475ZD28N 130
R2475ZD28R 130
R2619ZC18J 130
R2619ZC18K 130
R2619ZC18L 130
R2619ZC20J 130
R2619ZC20K 131
R2619ZC20L 131
R2619ZC21J 131
R2619ZC21K 131
R2619ZC21L 131
R2619ZC25J 131
R2619ZC25K 131
R2619ZC25L 131
R2619ZD18J 131
R2619ZD18K 131
R2619ZD18L 131
R2619ZD20J 131
R2619ZD20K 131
R2619ZD20L 131
R2619ZD21J 131
R2619ZD21K 131
R2619ZD21L 131
R2619ZD25J 131
R2619ZD25K 131
R2619ZD25L 131
R2620ZC22J 131
R2620ZC22K 131
R2620ZC22L 131
R2620ZC25J 131
R2620ZC25K 131
R2620ZC25L 131
R2620ZD22J 131
R2620ZD22K 131
R2620ZD22L 131
R2620ZD25J 131
R2620ZD25K 131
R2620ZD25L 131
R2714ZC14H 131
R2714ZC14J 131
R2714ZC14K 131
R2714ZC18H 131
R2714ZC18J 131
R2714ZC18K 131
R2714ZD14H 131
R2714ZD14J 131
R2714ZD14K 131
R2714ZD18H 131
R2714ZD18J 131
R2714ZD18K 131
R3047TC24K 131
R3047TC24L 131
R3047TC24M 131
R3047TC24N 131
R3047TC28K 131
R3047TC28L 131
R3047TC28M 131
R3047TC28N 131
R3047TD24K 132
R3047TD24L 132
R3047TD24M 132

Alphanumeric Index

➢ New
○ Not for new design
✧ Under development

R3047TD24N 132
R3047TD28K 132
R3047TD28L 132
R3047TD28M 132
R3047TD28N 132
R3370ZC12C 132
R3370ZC12D 132
R3370ZC12E 132
R3370ZD12C 132
R3370ZD12D 132
R3370ZD12E 132
R3559TC16K 132
R3559TC16M 132
R3559TC16N 132
R3559TC20K 132
R3559TC20M 132
R3559TC20N 132
R3559TD16K 132
R3559TD16M 132
R3559TD16N 132
R3559TD20K 132
R3559TD20M 132
R3559TD20N 132
R3636EC16K 132
R3636EC16M 132
R3636EC16N 132
R3636EC20K 132
R3636EC20M 132
R3636EC20N 132
R3708FC45V 132
R3708FC45W 132
R3708FD45V 132
R3708FD45W 132
R3968FC24K 132
R3968FC24M 132
R3968FC24N 132
R3968FC28K 132
R3968FC28M 132
R3968FC28N 132
R3968FD24K 132
R3968FD24M 132
R3968FD24N 132
R3968FD28K 132
R3968FD28M 132
R3968FD28N 132
S0300SR12D 134
S0300SR12Y 134
S0500KC200 134
S0500KC20Y 134
S0500KC25D 134
S0500KC25Y 134
➢ S0500YC20Y 134
➢ S0500YC25Y 134
S0700KC140 134
S0700KC14Y 134
S0700KC17D 134
S0700KC17Y 134
S1000NC300 134
S1000NC30Y 134
S1000NC36D 134
S1000NC36Y 134
S1200NC200 134
S1200NC20Y 134
S1200NC25D 134
S1200NC25Y 134
SXB11987HEX 143
SXB1214FG 143
SXB1265FB 143
SXB1375B 143
SXB1645FB 143
SXB1764FG 143
SXB1920G 143
SXB2096B 143
SXB2167FB 143
SXB2324FG 143
SXB2428HEXT 143
SXB2939G 143
SXB3120FG 143
SXB3442B 143
SXB3529HEXT 143
SXB3840HEX 143
SXB4264B 143
SXB4649HEXT 143
SXB4869G 143
SXB5877HEX 143
SXB5993G 143
SXB6240HEXT 143
SXB868FB 143
SXB9737HEX 143
SXC1076FB 146
SXC1195FR 146
SXC1318FB 146
SXC1464FR 146
SXC1517FG 146
SXC1609FB 146
SXC1788FR 146
SXC1871FG 146
SXC2319FG 146
SXF30xxxxAN 152
SXF46xxxxAN 152
SXFLPxxxxAN 152
T0160NB45A 135
T0240NB45E 135
T0340VB45G 135
T0360NB25A 135
T0500NB25E 135
T0510VB45E 135
T0570VB25G 135
T0600TB45A 135
T0800EB45G 135
T0800TB45E 135
T0850VB25E 135
T0900EB45A 135
T1200EB45E 135
T1200TB25A 135
T1500TB25E 135
T1600GB45G 135
T1800GB45A 135
T2250AB25E 135
T2400GB45E 135
W0428RE250 108
W0428RE280 108
W0428RE320 108
W0428RF250 108
W0428RF280 108
W0428RF320 108
W0428SE250 108
W0428SE280 108
W0428SE320 108
W0428SF250 108
W0428SF280 108
W0428SF320 108
W0503RC160 108
W0503RC200 108
W0503RC240 108
W0503SC160 108
W0503SC200 108
W0503SC240 108
W0507YH360 109
W0507YH450 109
W0642WC160 109
W0642WC200 109
W0642WC240 109
W0735RA120 108
W0735RA150 108
W0735SA120 108
W0735SA150 108
W0944WC120 109
W0944WC150 109
W1032LC500 109
W1032LC560 109
W1032LC600 109
W1074YC200 109
W1074YC260 109
W1074YC320 109
W1074YH200 109
W1074YH260 109
W1074YH320 109
W1185LC300 109
W1185LC380 109
W1185LC450 109
W1185LC450KBN 155
W1185LC450KBR 155
W1185LC450KCN 155
W1185LC450KCR 155
W1263YC160 109
W1263YC200 109
W1263YC250 109
W1263YH160 109
W1263YH200 109
W1263YH250 109
W1411LC300 109
W1411LC360 109
W1411LC360KBN 155
W1411LC360KBR 155
W1411LC360KCN 155
W1411LC360KCR 155
W1520NC500 109
W1520NC600 109
W1524LC240 109
W1524LC300 109
W1524LC300KBN 155
W1524LC300KBR 155
W1524LC300KCN 155
W1524LC300KCR 155
W1748LC180 109
W1748LC220 109
W1748LC220KBN 155
W1748LC220KBR 155
W1748LC220KCN 155
W1748LC220KCR 155
W1748LC250 109
○ W1856NC400 109
○ W1856NC500 109
W2054NC360 109
W2054NC450 109
W2058LC100 109
W2058LC120 109
W2058LC120KBN 155
W2058LC120KBR 155
W2058LC120KCN 155
W2058LC120KCR 155
W2058LC140 109
W2115MC520 109
W2115MC560 109
W2115MC600 109
W2134NC300 109
W2134NC400 109
○ W2624NC200 109
○ W2624NC250 109
W2820VC360 109
W2820VC450 109
W2820VF360 109
W2820VF450 109
W2899MC420 109
W2899MC460 109
W2899MC480 109
W3082MC420 109
W3082MC440 109
W3082MC450 109
W3082MC45KDN 155
W3082MC45KDR 155
W3128VC300 110
W3128VC400 110
W3128VF300 110
W3128VF400 110
W3270NC200 110
W3270NC20A 110
W3270NC220 110
W3270NC22A 110
➢ W3305QK240 110
➢ W3305QK280 110
W3455QK200 110
W3455QK220 110
W3477MC360 110
W3477MC380 110
W3477MC400 110
W3697VC220 110
W3697VC280 110
W3697VF220 110
W3697VF280 110
W3708MC300 110
W3708MC320 110
W3708MC350 110
W3708MC35KDN 155
W3708MC35KDR 155
W3743ZC400 110
W3743ZC450 110
W3743ZC500 110
W3743ZD400 110
W3743ZD450 110
W3743ZD500 110
W3841VC300 110
W3841VC340 110
W3841VF300 110
W3841VF340 110
W3842MC240 110
W3842MC280 110
W3842MC28KDN 155
W3842MC28KDR 155
W3864QK120 110
W3864QK150 110
W3864QK180 110
W4096ZC340 110
W4096ZC450 110
W4096ZD340 110
W4096ZD450 110
W4534NC020 110
W4534NC060 110
W4693QK050 110
W4693QK080 110
W4693QR050 110
W4693QR080 110
W4713HL300 110
W4713HL350 110
W4713HM300 110
W4713HM350 110
W4767MC180 110
W4767MC220 110
W5092ZC320 110
W5092ZC350 110
W5092ZD320 110
W5092ZD350 110
➢ W5130MK240 110
➢ W5130MK280 110
➢ W5139TE400 111
➢ W5139TE480 111
➢ W5139TJ400 111
➢ W5139TJ480 111
W5282ZC240 111
W5282ZC300 111
W5282ZD240 111
W5282ZD300 111
○ W5292TC500 111
○ W5292TC560 111
○ W5292TD500 111
○ W5292TD560 111
W5334MK200 111
W5334MK220 111
W5636MC120 111
W5636MC140 111
W5636MC150 111
W5636MC15KDN 155
W5636MC15KDR 155
W5696VC100 111
W5696VC140 111
W5696VF100 111
W5696VF140 111
W5838ZC180 111
W5838ZC220 111
W5838ZD180 111
W5838ZD220 111
➢ W5984TE360 111
➢ W5984TE400 111
➢ W5984TJ360 111
➢ W5984TJ400 111
W6262ZC200 111
W6262ZC240 111
W6262ZD200 111
W6262ZD240 111
W6908FC450 111
W6908FC500 111
W6908FD450 111
W6908FD500 111
W7045MC030 111
W7045MC060 111
W8405ZC100 111
W8405ZC140 111
W8405ZD100 111
W8405ZD140 111
➢ W8570TE180 111
➢ W8570TE220 111
➢ W8570TJ180 111
➢ W8570TJ220 111
➢ W9830TE120 111
➢ W9830TE150 111

Alphanumeric Index

➢ New
○ Not for new design
✧ Under development

➢ W9830TJ120 111
➢ W9830TJ150 111
XK0450BA019M 152
XK0450BA025M 152
XK0450BB019M 152
XK0450BB025M 152
XK0450DA056M 148
XK0450DT056M 148
XK0450SA056M 148
XK0550DA056M 148
XK0550SA056M 148
XK0600DA074M 148
XK0600SA074M 148
○ XK0900DA056M 148
○ XK0900DT056M 148
XK0900SA056M 148
XK1000DA074M 148
XK1000SA074M 148
XK1100DA076M 148
XK1130DA076M 148
XK1130DT076M 148
XK1130SA076M 148
XK1130SB076M 155
XK1500BA034M 152
XK1500CB034M 155
XK1800DA076M 148
XK1800DT076M 148
XK1800SA076M 148
XK2000DA114M 148
XK2000SA114M 148
XK2100DA076M 148
XK2100DA076ML 148
XK2100SA076M 148
XK2100SA076ML 148
○ XK2140DA076M 148
○ XK2140DA076ML 148
○ XK2140DT076M 148
○ XK2140DT076ML 148
XK2140SA076M 148
XK2140SA076ML 148
XK2140SB076M 155
XK2500DA114M 148
XK2500DA116M 148
XK2500DA116ML 148
XK2500SA114M 148
XK2500SA116M 148
XK2500SA116ML 148
XK2700DA076M 148
XK2700DT076M 148
XK2700SA076M 148
○ XK3000DA116M 148
○ XK3000DA116Mx 148
XK3000SA116M 148
XK3000SA116ML 148
XK3060DA140ML 149
XK3060SA140ML 149
XK3500DA116M 148
XK3500DA116ML 148
XK3500SA116M 148
XK3500SA116ML 148
○ XK4000DA116M 148
○ XK4000DA116ML 148
XK4000SA116M 148
XK4000SA116ML 148
XK5000DA128M 149
XK5000DA128ML 149
XK6120DA180ML 149
XK6120SA180ML 149
XK7000DA128M 149
XK7000DA128ML 149
XK9000DA160M 149
XK9000DA160ML 149
XK9000SA160M 149
XK9000SA160ML 149
XSFGAxxxxAN 152
XSFGxxxxAN 152
XSFHxxxxAN 152
XSFTBxxxxAN 152
XSFTCxxxxAN 152
XSFTxxxxAN 152
XSGSCX13 147
XSK####DA042Mxxx 150
XSK####DA054Mxxx 150
XSK####DA056Mxxx 150
XSK####DA065Mxxx 150
XSK####DA075Mxxx 150
XSK####DA087Mxxx 150
XSK####DA103Mxxx 150
XSK####DA112Mxxx 150
XSK####DA120Mxxx 150
XSK####DA126Mxxx 150
XSK####DF042Mxxx 150
XSK####DF054Mxxx 150
XSK####DF056Mxxx 150
XSK####DF065Mxxx 150
XSK####DF075Mxxx 150
XSK####DF087Mxxx 150
XSK####DF103Mxxx 150
XSK####DF112Mxxx 150
XSK####DF120Mxxx 150
XSK####DF126Mxxx 150
XSK####DT042Mxxx 150
XSK####DT054Mxxx 150
XSK####DT056Mxxx 150
XSK####DT065Mxxx 150
XSK####DT075Mxxx 150
XSK####DT087Mxxx 150
XSK1500DA076038 151
XSK1500DA076076 151
XSK1500DA076101 151
XSK2000DA076038 151
XSK2000DA076076 151
XSK2000DA076101 151
XSK3000DA076038 151
XSK3000DA076076 151
XSK3000DA076101 151
XSK3400DA076038 151
XSK3400DA076076 151
XSK3400DA076101 151
XSK3800DA116M076 151
XSK3800DA116M101 151
XSK4400DA116M076 151
XSK4400DA116M101 151
XSK6000DA116M076 151
XSK6000DA116M101 151
XSL1000C2WRP 147
XSL1000C2WRT 147
XSL1100C2WRT 147
XSL200D8WRC 147
XSL200D8WRCP 147
XSL220C2WRT 147
XSL300C2WRP 147
XSL300C2WS 147
XSL350C2WRP 147
XSL400C2WRP 147
XSL500C2WRP 147
XSL600C2WRP 147
XSNM10H15P 153
XSNM12H10S 153
XSNM12H12S 153
XST1000M08P 147
XST1000M10P 147
XST1000M12P 147
XST1000M16P 147
XW076NC16A 153
XW076NC16B 153
XW076NC16BS 153
XW076NC16BT 153
XW076NC16C 153
XW076NC16CT 153
XW076NC16R 153
XW076NC16W 153
XW116ZC20A 153
XW116ZC20B 153
XW116ZC20C 153
XW116ZC20R 153
XW116ZC20W 153
XW127EA25A 153
XW127EA25B 153
XW127EC25A 153
XW127EC25B 153
XW127EN15A 153
XW127EN15B 153
XW160FC25A 153
XW160FC25B 153
XW180GA34A 153
XW180GA34B 153
XW180GC34A 153
XW180GC34B 153
XW180GN25A 153
XW270QA25A 153
Y200CKC250 133
Y500CNC250 133
XK1130DA076M 142
XK1130DT076M 142
XK1130SA076M 142
➢ XK1500BA034M 143
XK1800DA076M 142
XK1800DT076M 142
XK1800SA076M 142
XK2000DA114M 142
XK2000SA114M 142
XK2100DA076M 142
XK2100DA076ML 142
XK2100SA076M 142
XK2100SA076ML 142
XK2140DA076M 142
XK2140DA076ML 142
XK2140DT076M 142
XK2140DT076ML 142
XK2140SA076M 142
XK2140SA076ML 142
XK2500DA114M 142
XK2500DA116M 142
XK2500DA116ML 142
XK2500SA114M 142
XK2500SA116M 142
XK2500SA116ML 142
XK2700DA076M 142
XK2700DT076M 142
XK2700SA076M 142
XK3000DA116M 142
XK3000DA116ML 142
XK3000SA116M 142
XK3000SA116ML 142
XK3060DA140ML 143
XK3060SA140ML 143
XK3500DA116M 142
XK3500DA116ML 142
XK3500SA116M 142
XK3500SA116ML 142
XK4000DA116M 142
XK4000DA116ML 142
XK4000SA116M 142
XK4000SA116ML 142
XK5000DA128M 143
XK5000DA128ML 143
XK6120DA180ML 143
XK6120SA180ML 143
XK7000DA128M 143
XK7000DA128ML 143
XK9000DA160M 143
XK9000DA160ML 143
XK9000SA160M 143
XK9000SA160ML 143
XSFGAxxxxAN 146
XSFGxxxxAN 146
XSFHxxxxAN 146
XSFTBxxxxAN 146
XSFTCxxxxAN 146
XSFTxxxxAN 146
➢ XSGSCX13 141
XSK1500DA076xxx 144
XSK1500DA076xxx 144
XSK1500DA076xxx 144
XSK2000DA076xxx 144
XSK2000DA076xxx 144
XSK2000DA076xxx 144
XSK3000DA076xxx 144
XSK3000DA076xxx 144
XSK3000DA076xxx 144
XSK3400DA076xxx 144
XSK3400DA076xxx 144
XSK3400DA076xxx 144
XSK3800DA116Mxxx 144
XSK3800DA116Mxxx 144
XSK4400DA116Mxxx 144
XSK4400DA116Mxxx 144
XSK6000DA116Mxxx 144
XSK6000DA116Mxxx 144
➢ XSL1000C2WRP 141
➢ XSL300C2WRP 141
XSNM10H15P 145
XSNM12H10S 145
XSNM12H12S 145
➢ XST1000M08P 141
➢ XST1000M10P 141
➢ XST1000M12P 141
➢ XST1000M16P 141
XW076NC16A 145
XW076NC16B 145
XW076NC16BS 145
XW076NC16BT 145
XW076NC16C 145
XW076NC16CT 145
XW076NC16R 145
XW076NC16W 145
XW116ZC20A 145
XW116ZC20B 145
XW116ZC20C 145
XW116ZC20R 145
XW116ZC20W 145
➢ XW127EA25A 145
➢ XW127EA25B 145
➢ XW127EC25A 145
➢ XW127EC25B 145
XW127EN15A 145
XW127EN15B 145
XW160FC25A 145
XW160FC25B 145
➢ XW180GA34A 145
➢ XW180GA34B 145
XW180GC34A 145
➢ XW180GC34B 145
➢ XW180GN25A 145
XW270QA25A 145

Symbols and Terms

a	Acceleration
BV_{CES}	Collector emitter breakdown voltage
BV_{DSS}	Drain source breakdown voltage
C_{ies}, C_{iss}	Input capacitance
C_{oes}, C_{oss}	Output capacitance
C_{res}, C_{rss}	Reverse transfer (Miller) capacitance
d	Duty cycle
d_A	Strike distance through air
di/dt, - di/dt	Rate of change of current
$(di/dt)_{cr}$	Critical rate of rise of current
di_F/dt, $-di_F/dt$	Rate of change of forward current
d_S	Creep distance on surface
dv/dt	Rate of rise of voltage
$(dv/dt)_{cr}$	Critical rate of rise of voltage
E_{AR}	Repetitive avalanche energy
E_{AS}	Non-repetitive avalanche energy
E_{off}	Turn-off energy per pulse
E_{on}	Turn-on energy per pulse
$E_{rec(off)}$	Reverse recovery losses at turn-off
$F_{(mounting)}$	Required force to mount hole-less discretes on heat sink
g_{fs}	Forward transconductance
I_{AR}	Repetitive avalanche current
I_{AVM}	Maximum average forward current
I_{BO}	Breakover current
$I_{C(on)}$	Short circuit current
I_C	Collector current
I_{C25}	Continuous DC collector current at T_C = 25°C
I_{C90}	Continuous DC collector current at T_C = 90°C
I_{CES}	Collector emitter leakage current
I_{CM}	Maximum pulsed collector current
I_D	Drain current
I_{DD}	Module supply current, operating mode
I_{DD0}	Module supply current, standby mode
$I_{D(cont)}$	Continuous drain current
I_{D25}	Continuous drain current at T_C = 25°C
I_{DAV}	Average DC output current
$I_{D(AV)M}$	Maximum average DC output current
I_{DM}	Maximum pulsed drain current
I_{DRM}	Maximum repetitive off-state current
$I_{D(RMS)}$	RMS output current
I_{DSS}	Drain source leakage current
I_F, I_T	Forward current
I_{FM}	Maximum forward current
I_{FAV}	Average forward current
$I_{F(AV)M}$, $I_{T(AV)M}$	Maximum average forward current
I_{FLT}	Sink current of fault terminal
I_{FRM}	Maximum repetitive forward current
$I_{F(RMS)}$, $I_{T(RMS)}$	RMS forward current
I_{FSM}, I_{TSM}	Maximum surge forward current
I_G, I_{GT}	Trigger gate current
I_{GD}	Non-trigger gate current
I_{GES}	Gate emitter leakage current
I_H	Holding current
$I_{IN(H)}$	Signal input current (high level)
$I_{IN(L)}$	Signal input current (low level)
I_{ISOL}	RMS current for isolation test
I_L	Latching current
I_R	Reverse current
I_{RM}	Maximum reverse recovery current
I_{RMS}	RMS current
I_{RRM}	Maximum repetitive reverse current
I_S	Continuous source current
I_{SM}	Maximum pulsed source current
I^2t	I^2t value for fusing
I_{TSM}	Maximum surge on-state current
K_f	Characteristic factor
K_p	Coeff. for energy per pulse Ep (material constant)
K_T	Temperature coefficient of VBO
L	Series stray inductance
M_d	Mounting torque
P_C	Collector power dissipation
P_D	Power dissipation
P_{GAV}	Average gate power dissipation
$P_{G(AV)M}$	Maximum average gate power dissipation
P_{GM}	Maximum gate power dissipation
P_{RSM}	Maximum surge reverse power dissipation
P_T, P_{tot}	Total power dissipation
Q_g	Total gate charge
Q_{gc}	Gate collector (Miller) charge
Q_{gd}	Gate drain (Miller) charge
Q_{ge}	Gate emitter charge
Q_{gs}	Gate source charge
Q_r	Reverse recovery charge
Q_{RM}	Reverse recovery charge (intrinsic diode)
Q_S	Recovered charge to IRM

RBSOA	Reverse Bias Safe Operating Area
$R_{DS(on)}$	Static drain source on resistance
R_{FI}	Radio frequency interference (= EMI)
R_G	Gate resistance
R_{GE}	Gate emitter resistance
rT	Slope resistance (for power loss calculation only)
R_{thCK}; R_{thCH}	Thermal resistance case to heatsink
R_{thJA}	Thermal resistance junction to ambient
R_{thJC}	Thermal resistance junction to case
R_{thJK}; R_{thJH}	Thermal resistance junction to heatsink
R_{thJS}	Thermal resistance junction to heatsink
R_{thJW}	Thermal resistance junction to water
R_{thKA}	Thermal resistance heatsink to ambient
SCSOA	Short Circuit Safe Operating Area
T_{amb}, T_A	Ambient (cooling medium) temperature
T_C, T_{case}	Case temperature
$t_{d(off)}$	Turn-off delay time
$t_{d(on)}$	Turn-on delay time
t_{fi}	Current fall time (inductive load)
t_{fr}	Forward recovery time
t_{FLT}	Overcurrent or short circuit trip delay time
t_{gd}	Gate controlled delay time
T_J, T_{VJ}	Virtual junction temperature
T_{JM}, T_{VJM}	Maximum virtual junction temperature
T_K, T_H, T_S	Heatsink temperature
T_L	Lead temperature
$T_{S(max)}$	Maximum allowable heatsink temperature
T_{stg}	Storage temperature
t_P	Pulse time
t_q	Turn-off time
t_r	Current rise time
t_{rr}	Reverse recovery time
t_{rv}	Rise time of collector emitter voltage
t_{SC}	Short circuit duration
V_{BO}	Breakover voltage
V_{CE}	Collector emitter voltage
$V_{CE(sat)}$	Collector emitter saturation voltage
$V_{CE(sat)FLT}$	Collector emitter saturation voltage to indicate fault
V_{CEK}	Collector emitter clamp voltage on chip level
V_{CES}	Collector emitter voltage
V_{CGR}	Collector gate voltage
V_{DD}	Module supply voltage
$V_{DD\ FLT}$	Module supply voltage without fault
V_{DGR}	Drain gate voltage
V_{DRM}	Maximum repetitive forward blocking voltage
V_{DS}	Drain source voltage

V_{DSM}	Max. non-repetitive forward blocking voltage
V_{DSS}	Drain source breakdown voltage
Version	Various construction designs of products
V_F	Forward voltage
V_{FLT}	Voltage at fault terminal
V_{FR}	Forward recovery voltage
V_{GD}	Gate non-trigger voltage
V_{GE}	Gate emitter voltage
$V_{GE(th)}$	Gate emitter threshold voltage
V_{GEM}	Maximum transient collector gate voltage
V_{GES}	Maximum DC gate voltage
V_{GS}	Gate source voltage
$V_{GS(th)}$	Gate threshold voltage
V_{GSM}	Maximum transient gate source voltage
V_{GT}	Gate trigger voltage
V_H	Holding voltage
V_{IN}	Input control voltage
$V_{IN(H)}$	Input voltage threshold for IGBT turn-on
$V_{IN(L)}$	Input voltage threshold for IGBT turn-off
V_{ISOL}	Isolation voltage
V_R	Reverse voltage
V_{RES}	Input voltage threshold for Reset = active
V_{RGM}	Maximum reverse gate voltage
V_{RRM}	Maximum repetitive reverse voltage
V_{RSM}	Maximum non-repetitive reverse voltage
VSD	Forward voltage drop
V_T	Forward voltage
V_{T0}	Threshold voltage (for power loss calculation)
Z_{thJC}	Transient thermal impedance junction to case
Z_{thJK}, Z_{thJH}	Transient thermal impedance junction to heatsink

Semiconductor Catalog, Edition 2013

© IXYS Corporation 2013
All Rights reserved

Note
As far as patents or other rights of third parties are concerned, liability is only assumed for components per se, not for applications, processes and circuits implemented with components or assemblies. The information describes the type of component and shall not be considered as assured characteristics.
Stress above one or more of the limiting values may cause permanent damage to the device. These are stress ratings only and operation of the device at these or at any other conditions above those given in the characteristics sections of the specification is not implied. Exposure to limiting values for extended periods may affect device reliability. Terms of delivery and rights to change design or specifications are reserved. Changes have been made to earlier published specifications. The data herein supersedes all previously published informations.

Life support applications
IXYS products used in life support appliances, devices, or systems where malfunction of these products can reasonably be expected to result in personal injury must be expressly authorized for such purposes.

Nomenclature

IXYS UK WESTCODE

CAPSULE DEVICES

W 0646 W C 15 0 **(Sample)**

Device Type

W	Rectifier diode
M	Fast/soft recovery diode
F	Extra fast diode
E	HP Sonic-FRD™
N	Phase control thyristor
R	Distributed gate thyristor
P	Fast turn-off thyristor
K	Medium voltage thyristor
A	Asymmetric thyristor
S	Symmetrical Gate Turn-off thyristor
H	Fast Symmetrical Gate Turn-off thyristors
G	Asymmetric Gate Turn-off thyristors
Y	Pulse Thyristors

0646

Device nominal current rating

* For devices exceeding 9999 amperes, digit 5 of the part number changes to C (x10)

Electrode diameter

W	19 mm
Y	25 mm
K	29 mm
J	32 mm
L	34 mm
Q	38 mm
N	47 mm
M	50 mm
P	57 mm
V	63 mm
H	66 mm / 68 mm
Z	73 mm
T	75 mm
E	85 mm
F	99 mm
G	125 mm

tq Code			
0	No code		
A	10	M	70
B	12	N	100
C	15	P	120
D	20	R	140
E	25	S	160
F	30	T	200
G	35	V	250
H	40	W	300
J	50	X	400
K	60	Y	500
L	65	Z	1000

Housing Type (electrode diameter in brackets)

A	26 mm reverse build
C	Standard outline 14 mm (W, Y) 16 mm (K) 26 mm (L, Q, M, T, E) 26.5 mm (N) 33 mm (V) 36 mm (F, G) 37 mm (Z)
D	21 mm (N), 24 mm (V, Z), Thick pack 26 mm (Z, F, G)
E	35 mm inverse build (T, M, Q)
F	19.5 mm (L), 26 mm (K, N, V), 35 mmm (Z)
G	35 mm (L, N)
H	14 mm (N), 26 mm(Y), slotted 32 mm (V)
J	19.5 mm (N), 25.8 mm (V)
K	Wespack 14.5 mm (J, Q, M, H)
L	Wespack 26 mm (Q, M)
M	Wespack 33 mm (H)
R	Wespack 14 mm (Q), 26 mm (N)

V_{RRM} % of V_{DRM} for GTO's (S and H types only)	
0	100
D	80
Y	100 V

15 ***Voltage grade*** = V_{RRM} / V_{DRM} ÷ 100

0 ***t_q code for fast thyristors or V_{RRM} % of V_{DRM} for GTO thyristors***

P	PIN diode (Device Types: W, M, F and E)
R	Rotating Package (N, K, W)
A	Avalanche rated diode (W)

Nomenclature

IXYS UK WESTCODE

STUD DEVICES

W 0508 S A 04 0 (Sample)

Device type

W	Rectifier diode
M	Fast/soft recovery diode
N	Phase control thyristor
P	Fast turn-off thyristor
S	Symmetrical Gate turn-off thyristor

Device nominal current rating

0508

Polarity

S	Normal
R	Reverse (diode only)

Package

A	¾“ stud glass/metal
C	¾“ stud ceramic
E	¾“ HV ceramic stud with lug
F	¾“ HV ceramic stud
H	½“ stud ceramic
J	½“ stud ceramic with flag
L	M12 stud ceramic with lug
M	$^3/_8$“ stud ceramic
R	M20 stud ceramic with leg & lgate leads

04 ***Voltage grade*** = $V_{RRM} / V_{DRM} \div 100$

tq code

0	No code
A	10
B	12
C	15
D	20
E	25
F	30
G	35
H	40
J	50
K	60
L	65
M	70
N	100
P	120
R	140
S	160
T	200
V	250
W	300
X	400
Y	500
Z	1000

PRESS-PACK IGBT CAPSULE DEVICES

T 0240 N B 45 E

Device type

T	Press-pack IGBT thyristor

0240 ***Device pulse current rating***

Pole electrode diameter

N	47 mm
V	63 mm
T	75 mm
E	85 mm
A	96 mm
G	125 mm

B ***Die series***

45 ***Voltage grade - V_{RRM}/100***

Build description for multiple square die

A	Reverse conducting
E	Asymmetric
G	Reversing (IGBT to diode ratio of 2:1)

NEW PACKAGES

NEW High Voltage TO-263 *(D²-Pak)* and TO-268 *(D³-Pak)* packages

- ✓ improved pin spacing (no middle pin)
- ✓ creepage distance pins to copper of backside:
  4.7 mm for new TO-263 HV package
  5.8 mm for new TO-268 HV package

Products in TO-263 HV package (w/o middle pin)

BIPOLAR ➢ New	Technology	Config.	V_{RRM} V	I_{DAV} / I_{TAV} A	@ T_C °C
➢ **CMA 30E1600PZ**	Thyristor	single	1600	30	115
➢ **DMA 10P1600PZ**	Rectifier Diode	Phase Leg	1600	10	150
➢ **DNA 30E2200PZ**	Rectifier Diode	Single	2200	30	140
➢ **DNA 30EM2200PZ**				30	140

X011c **TO-263AB**

IGBT & MOSFET ➢ New	Technology	Config.	V_{CES} / V_{DSS} V	I_{C25} / I_{D25} A	V_{CEsat} / R_{DSon} V / Ω
➢ **IXXA 30N65C3HV**	GenX3™ XPT IGBT	Single	650	52	2.2 V
➢ **IXA 12IF1200PZ**	XPT IGBT	Copack	1200	20	1.8 V
➢ **IXA 20I1200PZ**		Single	1200	38	1.8 V
➢ **IXTA 3N100D2HV**	Depletion Mode MOSFET		1000	3.0	6 Ω
➢ **IXGA 20N250HV**	High Voltage NPT IGBT		2500	30	3.1 V
➢ **IXBA 12N300HV**	High Voltage BIMOS		3000	30	2.8 V
➢ **IXTA 02N450HV**	High Voltage MOSFET		4500	0.2	750 Ω

Creepage (min):

pin to pin: 4.0 mm

pin to Cu back-side: 4.7 mm

for more details see outline drawings

Products in TO-268 HV package (w/o middle pin)

BIPOLAR ➢ New	Technology	Config.	V_{RRM} V	I_{DAV} / I_{TAV} A	@ T_C °C
➢ **CLA 60MT1200NTZ**	Triac	Single	1200	30	120
➢ **CMA 50E1600TZ**	Thyristor		1600	50	110

IGBT & MOSFET ➢ New	Technology	Config.	V_{CES} / V_{DSS} V	I_{C25} / I_{D25} A	V_{CEsat} / R_{DSon} V / Ω
➢ **IXA 4IF1200TZ**	XPT IGBT	Copack	1200	9	1.8 V
➢ **IXYT 20N120C3D1HV**	GenX3™ XPT IGBT		1200	36	4.0 V
➢ **IXTT 1N250HV**	High Voltage MOSFET	Single	2500	1.5	40 Ω
➢ **IXGT 25N250HV**	High Voltage NPT IGBT		2500	60	2.9 V
➢ **IXBT 12N300HV**	High Voltage BIMOS		3000	30	2.8 V
➢ **IXBT 20N300HV**	High Voltage BIMOS		3000	50	2.7 V
➢ **IXBT 42N300HV**	High Voltage BIMOS		3000	104	2.5 V
➢ **IXTT 02N450HV**	High Voltage MOSFET		4500	0.2	750 Ω
➢ **IXTT 1N450HV**	High Voltage MOSFET		4500	1.0	85 Ω

X019a **TO-268AA**

Creepage (min):

pin to pin: 9.4 mm

pin to Cu back-side: 5.8 mm

for more details see outline drawings

ISO247 ISOPLUS Technology with Screw Hole

- ✓ **3000V isolation**
- ✓ **Excellent thermal performance**
- ✓ **100% mechanical fit to TO-247**

BIPOLAR ➢ New	Technology	Configuration	V_{RRM} V	I_{DAV} / I_{TAV} A	@ T_C °C
➢ **DSA 90C200HR**	Schottky Gen²	Common Cathode	200	2 x 45	140
➢ **CLA 60MT1200NHR**	Triac	Single	1200	30	120

IGBT ➢ New	Technology	Config.	V_{CES} / V_{DSS} V	I_{C25} / I_{D25} A	V_{CEsat} V
➢ **IXGJ 50N60C4D1**	High Gain IGBT	Copack	600	52	2.5
➢ **IXYJ 20N120C3D1**	Gen X3 XPT IGBT		1200	21	2.5

X016c **ISO247**

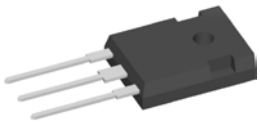

ISOPLUS-SMPD™ ISOPLUS-DIL™ ISOPLUS i4-PAC™ ISOPLUS264™ ISO247™ ISOPLUS247™ ISOPLUS220™

Isolated Discrete Packages

ISOPLUS247™ is the DCB isolated version of the PLUS247™ package (TO-247 without a mounting hole). The design of this patented package is revolutiory: the silicon chip is soft soldered onto a Direct Copper Bond (DCB) substrate instead of the usual copper lead frame. The DCB ceramic, the same substrate material as used in the high power modules, not only provides high isolation capability (2500 V_{RMS}) but also unbeatable low thermal resistance compared to conventiol, exterlly mounted isolation materials.

Advantages:

- Isolation capability from leads to backside 2500 V_{RMS} – no exterl isolation foil needed
- Thermal resistance from Junction to Case only slightly higher as for non-isolated version
- Increased power- and temperature cycling capability
- DCB can be patterned like printed circuit boards – allowing special functions to be realized

Package cross section

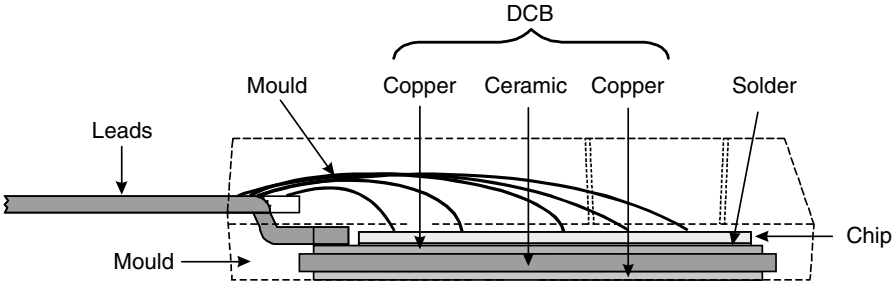

While the junction-to-case thermal resistance is higher than an equivalent, non-isolated device, what really matters is the total thermal resistance from junction-to-heatsink (R_{thJH}). Comparing a device in ISOPLUS247™ to its companion in the non-isolated package with an exterl isolation foil, one can see that the overall R_{th} is now lower for the part in the already isolated package (see example).

Due to the matched thermal expansion coefficients of silicon and DCB ceramic, mechanical stress to the die and solder caused by power and temperature cycling is reduced so that reliability is improved. Mounting is done with clips, which not only saves time but also guarantees constant pressure force over the whole lifetime of the assembly.

Parts in the **ISOPLUS247™** housing can be identified by the letter "**R**" in the IXYS part number. Potentially all devices now encapsulated in TO-247, TO-264 and PLUS247™ housings can be molded in the ISOPLUS247™. There are already more than 100 different ISOPLUS247™ types available.

Another interesting feature is the capability to pattern the DCB substrate like a printed circuit board. Now additiol special functions can be realized, e.g. the **series connection of single** diode chips within one package.

ISOPLUS220™, **ISOPLUS247™** and **ISOPLUS264™** are the DCB substitutes for the corresponding standard packages.

A larger version of this packaging technology is med **ISOPLUS i4-PAC™**. It has up to five termil pins, making it possible to build up full diode bridges, phase-leg transistor configurations, buck and boost converters and much more within one isolated discrete package.

ISOPLUS-DIL™ 37,5 mm long and 25 mm wide provides the largest mounting area within the ISOLPLUS™ family. It is available in 2 pin out version: „GWM" configuration with plar power pins for 300 A RMS on one side and 12 control pins on the oposite side and the „GMM" configuration with 12 pins on either side. The package is intented for high current low voltage (< 200 V) applications either as single switch or 6-pack. With highest power density and high reliability ISOPLUS-DIL™ is recommended for the use in automotive designs.

ISOPLUS-SMPD™ is the latest member of IXYS ISOPLUS™ family and provides an increased creepage distance between pins to DCB (>4 mm) and pin to pin (up to 7 mm).

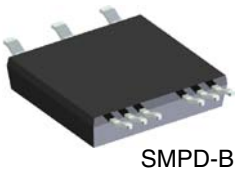

SMPD-B

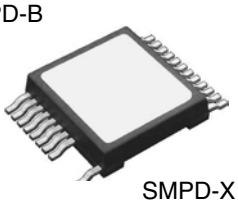

SMPD-X

Example: ISOPLUS247™ compared to conventiol isolated device

Type	Package	Isolation	R_{thJC} K/W	R_{thCK} K/W	Total K/W	Factor
IXF**R** 180N10	ISOPLUS247™	interl DCB	0.3	0.15	0.45	1
IXF**X** 180N10	PLUS247™	**exterl foil**	0.22	**1.02**	1.24	**2.8**

DCB isolated SMPD package for simplified mounting and high circuit flexibility

Reducing assembly costs is a continual demand of the semiconductor user. One of the various approaches is the usage of SMD packages which is successfully introduced by utilization of Power Semiconductors packaged in TO-263 (D^2Pak) or TO-268 (D^3Pak). If heat sinking is required designers have to look for solutions providing isolation and creepage distance.

ISOPLUS-SMPD™ package is the IXYS answer to the challenge to make designer's life easier as it provides an SMD device featuring:

- 2.5 kV isolation to heatsink (UL rating)
- low thermal impedance for good cooling by only 0.38 mm thick ceramic
- more than 4 mm creepage distance from pin to mounting surface
- up to 7 mm creepage from pin to pin (depending on package type)
- high integration such as phase leg or 3~ input rectifier in one package
- automatic mounting by pick & place possible (packaged in Tape & Reel)

This ebles the engineer to make flat designs with a concept of distributed power dissipation. The latter allows utilization of heatsinks with a thinner base reducing weight and cost.

The new ISOPLUS-SMPD™ package is small and light weight with two rows of pins, resembling an IC. It allows the assembly to the board in standard SMD pick & place equipment, together with other standard SMD components. ISOPLUS-SMPD™ devices are available in Tape & Reel or in a Blister Tray option.
The complete board including the power components can run through a standard SMD soldering process.

Two types are available. ISOPLUS-SMPD™-B (Fig. 1) is optimized for implementing more complex configurations like phase-legs, buck and boost chopper as well as single – or 3-phase input rectifier bridges, which can ideally be used as building blocks for inverters. ISOPLUS- SMPD™-X (Fig. 2) with a larger number of pins on either side allows the integration of large dies for very high current capability up to 600 A per unit.

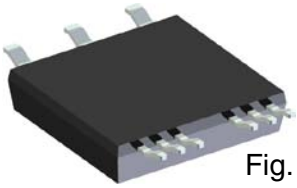

Fig. 1 SMPD-B

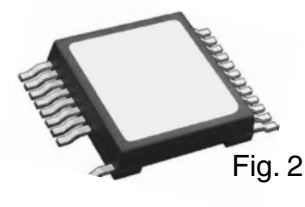

Fig. 2 SMPD-X

Both designs benefit from the ISOPLUS™ construction with low mechanical stress for the die because of a good match in the thermal expansion coefficient of die and DCB resulting in long term reliability.

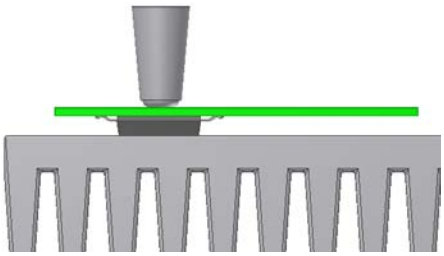

Fig. 3 Mounting example

As normal these devices require a layer of thermal interface material (heat transfer paste) to be applied to the backside of the power devices (or to the heat sink surface altertively). Then the devices can be mounted together with the PCB to a heat sink.
These power devices need to be pressed down to the heat sink to ensure low thermal resistances. Pressure can be applied in different ways, for example using a mounting clip or a post, applying pressure via the PCB directly to the power device (see Fig. 3 and Fig. 4).

The high package flexibility allows to offer

- high current single Trench MOSFET
- high current single IGBT
- buck and boost converters
- phase-legs with desaturation diodes for switch control
- 1~ or 3~ input rectifiers
- multiple boost stages
- cascade configurations

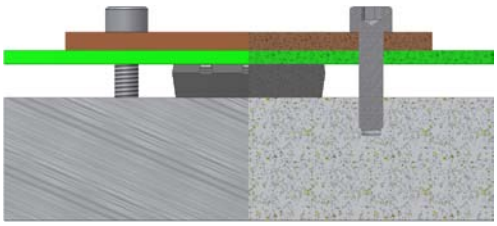

Fig. 4 Mounting example

Customer specific designs are feasable.

IGBT Modules – SMPD Converter Building Blocks

ISOPLUS™ Technology

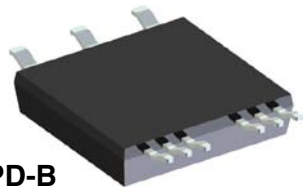

SMPD-B

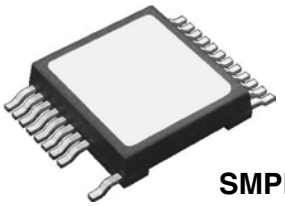

SMPD-X

- 2500 V UL rated electrical isolation
- low thermal resistance
- increased power & temperature cycling
- saves space
- replaces multiple discretes
- reduces parasitic inductance & capacitance
- reduces EMI
- heat spreading

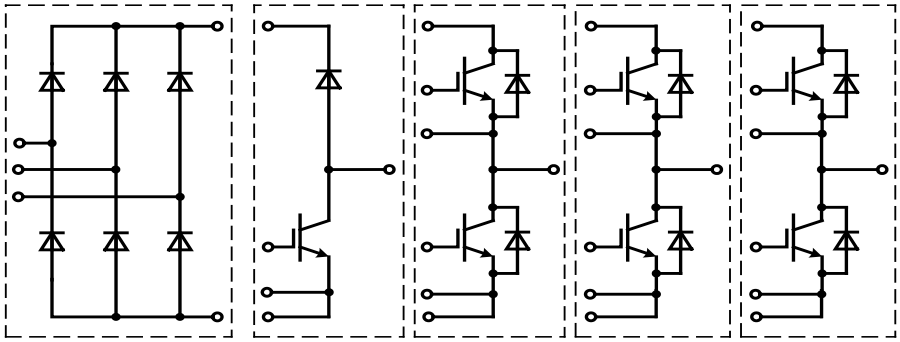

Rectifier | **Brake & Boost** | **Converter**

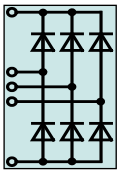

Line Rectifier
DMA90U1800LB

SONIC-FRD
DHG60U1200LB

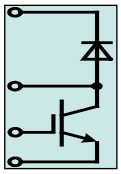

XPT-IGBT
IXA20RG1200DHGLB
IXA30RG1200DHGLB
IXA40RG1200DHGLB

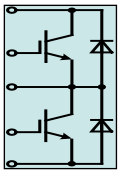

XPT-IGBT
IXA20PG1200DHGLB
IXA30PG1200DHGLB
IXA40PG1200DHGLB

IXA35PF650LB
IXA55PF650LB
IXA80PF650LB

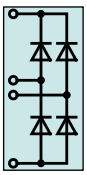

Line Rectifier
DLA100U1200LB

Fast Rectifier

DPG60B600LB	HiPerFRED
DCG20B650LB	SiC
DHG50B1200LB	SONIC
DCG20B1200LB	SiC

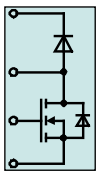

CoolMOS™

MKE38RK600DFELB	& FRED
MKG40RK600LB	& SONIC
MKG40RK600DCGLB	& SiC

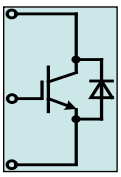

XPT-IGBT
MMIX1X100N60B3H1
MMIX1X200N60B3H1
IXD68IF650LB
IXD90IF650LB

MMIX1Y82N120C3H1
MMIX1Y100N120C3H1
IXA60IF1200DHGLB
IXA80IF1200DHGLB

MOSFETs

Type ➢ New ✧ under development	Circuit diagram / Technology	V_{DSS} V	I_{D25} T_C = 25°C A	$R_{DS(on)}$ typ. T_C = 25°C mΩ	Q_G nC	Fig. No.	Circuit Diagram
SINGLE							
MMIX 1T600N04T2	A Trench2	40	600	1.3	590	X031a	A 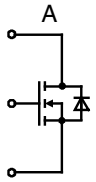
MMIX 1T550N055T2	A Trench2	55	550	1.3	595		
MMIX 1F520N075T2	A Trench2 HiPerFET	75	500	1.6	545		
➢ **MMIX 1F420N10T**	A Trench HiPerFET	100	334	2,6	670		
MMIX 1F360N15T2	A Trench2 HiPerFET	150	235	4,4	715		
➢ **MMIX 1F230N20T**	A Trench HiPerFET	200	168	8,3	378		
➢ **MMIX 1F180N25T**	A Trench HiPerFET	250	130	13	345		
➢ **MMIX 1F160N30T**	A Trench HiPerFET	300	102	20	335		B 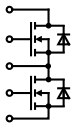
➢ **MMIX 1F210N30P3**	A Polar3 HiPerFET	300	108	16	286		
➢ **MMIX 1F132N50P3**	A Polar3 HiPerFET	500	63	43	250		
➢ **MMIX 1F44N100Q3**	A Q3 HiPerFET	1000	30	245	264		
➢ **MMIX 1F40N110P**	A Polar HiPerFET	1100	24	290	310		
BUCK / BOOST							
MKE 38RK600DFELB	C CoolMOS™ CP & FRED	600	50	40	150	X030a	
✧ **MKG 40RK600LB**	C CoolMOS™ C6 & SONIC		52	37	290		C 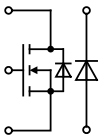
✧ **MKG 40RK600DCGLB**	C CoolMOS™ C6 & SiC		52	37	290		
✧ **MCB 21RK1200DCGLC**	C SiC Mosfet & SiC Diode	1200	30	80	50	X030b	
PHASE-LEG							
MKE 38P600LB	B CoolMOS™ CP	600	50	40	150	X030a	
✧ **MCB 21P1200LC**	B SiC Mosfet	1200	30	80	50	X030b	

CoolMOS™ is a trademark of Infineon Technologies

Outline drawings on
pages O-30...O-55

SMPD-B X030a

SMPD-B X030b

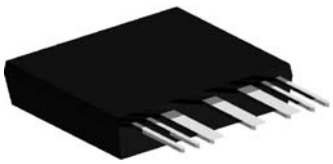

SMPD-X X031a

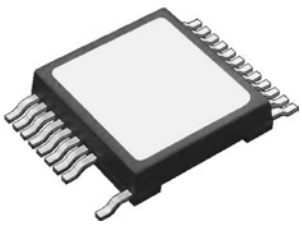

IGBTs

Type ➢ New ✧ under development	Circuit Diagram No. / Technology	V_{CES} V	I_{C25} T_C = 25°C A	$V_{CE(sat)}$ typ. T_C = 25°C V	Fig. No.
SINGLE and COPACK					
➢ **MMIX 1X200N60B3**	D XPT	600	223	1.4	X031a
➢ **MMIX 1G320N60B3**	D GenX3 IGBT		400	1.2	
➢ **MMIX 1X100N60B3H1**	E XPT & SONIC		145	1.5	
➢ **MMIX 1X200N60B3H1**	E XPT & SONIC		175	1.4	
✧ **IXA 110XF650ALB**	2xE 2 x XPT	650	2x 72	1.8	X030a
✧ **IXD 80IF650LB**	E Trench XPT & SONIC		108	1.65	
✧ **IXD 110IF650LB**	E Trench XPT & SONIC		145	1.75	
➢ **MMIX 1Y82N120C3H1**	E XPT fast & SONIC	1200	78	2.9	X031a
➢ **MMIX 1Y100N120C3H1**	E XPT fast & SONIC		92	2.9	
✧ **IXA 60IF1200DHGLB**	E XPT & SONIC		85	1.8	X030a
✧ **IXA 85IF1200DHGLB**	E XPT & SONIC		120	1.8	
➢ **MMIX 1G120N120A3H1**	D GenX3 IGBT @ SONIC		110	1.85	X031a
➢ **MMIX 1G75N250**	D IGBT for cap discharge	2500	110	2.5	X031a
BOOST					
IXA 20RG1200DHGLB	I XPT & SONIC	1200	32	1.8	X030a
➢ **IXA 30RG1200DHGLB**	I XPT & SONIC		43	1.9	
IXA 40RG1200DHGLB	I XPT & SONIC		63	1.85	
PHASE-LEG					
➢ **MMIX 2S50N60B4D1**	F low gain IGBT @ FWD	600	50	1.7	X031c
✧ **IXE 50PF600LB**	F fast Trench XPT & SONIC		67	1.6	X030a
➢ **IXA 35PF650LB**	F XPT & SONIC	650	44	1.75	
➢ **IXA 55PF650LB**	F XPT & SONIC		72	1.8	
➢ **IXA 80PF650LB**	F XPT & SONIC		106	1.8	
IXA 20PG1200DHGLB	G XPT & SONIC	1200	32	1.8	
➢ **IXA 30PG1200DHGLB**	I XPT & SONIC		43	1.9	
IXA 40PG1200DHGLB	G XPT & SONIC		63	1.85	
➢ **IXA 20PT1200LB**	K XPT & Tyhristor		28	1.8	
FULL-BRIDGE					
➢ **MMIX 4G20N250**	L IGBT for cap discharge	2500	23	3.1 max	X031b
➢ **MMIX 4B12N300**	L BiMOS	3000	26	2.8	
➢ **MMIX 4B20N300**	L BiMOS		34	2.7	

Circuit Diagram

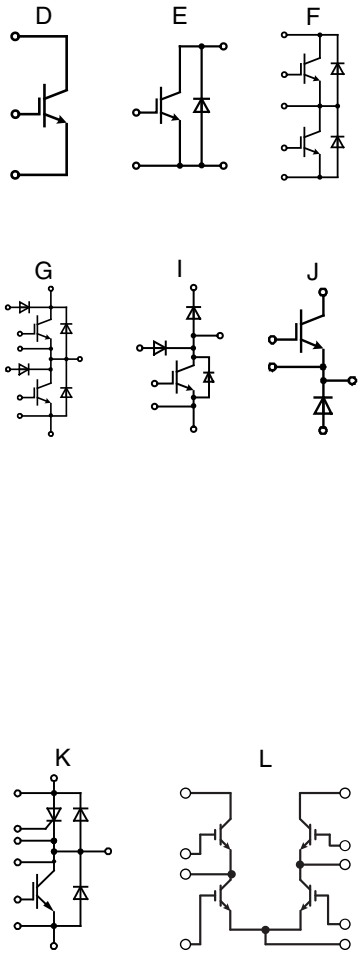

SMPD-Y

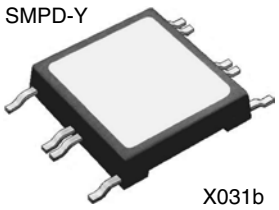

X031b

Outline drawings on pages O-30...O-55

SMPD-B

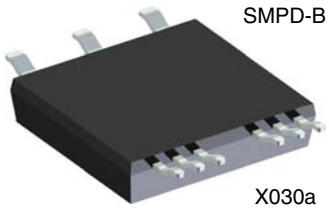

X030a

SMPD-X

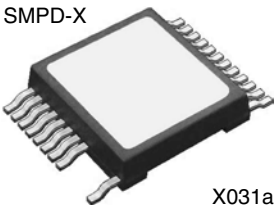

X031a

SMPD-Y

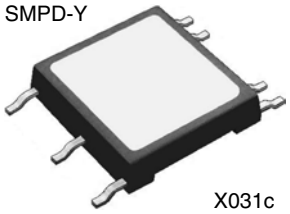

X031c

ISOPLUS-SMPD™

Diodes

Type ➢ New ✧ under development	Circuit diagram / Diode type	V_{RRM} V	$I_{D(AV)M}$ A	@ T_C °C	Fig. No.
DUAL					
DSA 120X150LB	M Schottky	150	2 x 60	150	X030a
➢ **DSA 120X200LB**	M Schottky	200	2 x 60	150	
➢ **DSA 240X200LB**	M Schottky		2 x 120	150	
1~ BRIDGE					
➢ **DPG 60B600LB**	N HiPerFRED	600	60	110	
✧ **DCG 20B650LB**	N SiC	650	20	*	
DLA 100B1200LB	N Rectifier	1200	124	80	
✧ **DHG 50B1200LB**	N SONIC		50	*	
✧ **DCG 20B1200LB**	N SiC		20	*	
3~ BRIDGE					
➢ **DHG 60U1200LB**	O SONIC	1200	62	80	
➢ **DMA 90U1800LB**	O Rectifier	1800	99	80	

* in progress

Circuit Diagram

M

N

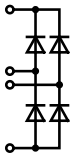

O

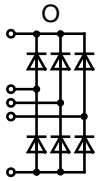

P

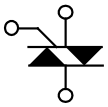

Q

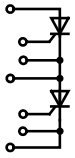

Thyristors, Triacs

Type ➢ New ✧ under development	Circuit diagram / Bipolar type		V_{RRM} V	I_{TAV} A	@ T_C °C	Fig. No.
DUAL						
✧ **CLA 60MU1200LB**	2 x P	Triac	1200	2 x 30	100	X030a
PHASE-LEG						
✧ **CMA 50P1600LB**	Q	Thyristor	2x 1600	50	90	

Outline drawings on pages O-30...O-55

SMPD-B X030a

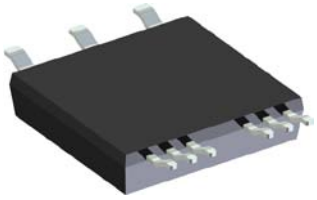

ISOPLUS-DIL™

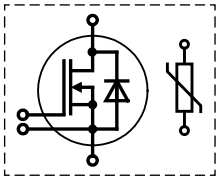

MTC...X...TGD

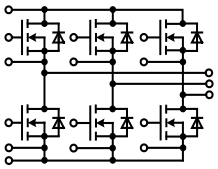

MTI..W...GC

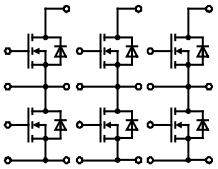

MTI...WX...GD / GMM

Single high current Switch with NTC

Type ✧ under development ➢ new	V_{DSS} V	I_{D25} T_C = 25°C A	I_{D90} T_C = 90°C A	R_{DSon} typ. T_J = 25°C mΩ	C_{iss} typ nF	Q_g typ nC	R_{thJC} K/W	Fig. No.
✧ **MTC 960X55TGD**	55	2x 640	2x 480	1.1	2x 40	2x 595	0.16	X026d
✧ **MTC 840X75TGD**	75	2x 550	2x 420	1.3	2x 40	2x 545	0.16	

Six-Pack Trench MOSFET

Type ✧ under development ➢ New	V_{DS} max. V	I_{D25} T_C = 25°C A	I_{D90} T_C = 90°C A	$R_{DS(on)}$ typ. T_C = 25°C mΩ	C_{iss} typ nF	Q_g typ nC	R_{thJC} K/W	Fig. No.
➢ **MTI 200WX75GD**	75	265	200	1.1	10.8	155	0.85	X026d
➢ **MTI 85W100GC**	100	110	83	3.2	6.3	90	1.45	X026c
➢ **MTI 145WX100GD**	100	190	145	1.7	11	155	0.85	X026d
GMM 3x60-015X2	150	50	38	19	5.8	97	1.00	

Customized configurations possible

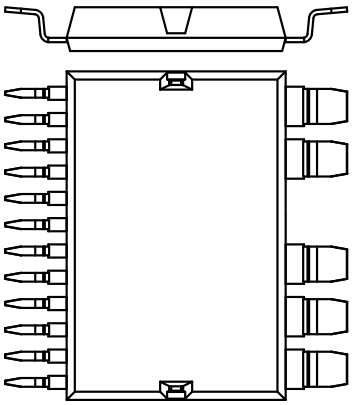

MTI...W..GC
SURFACE MOUNT DEVICE

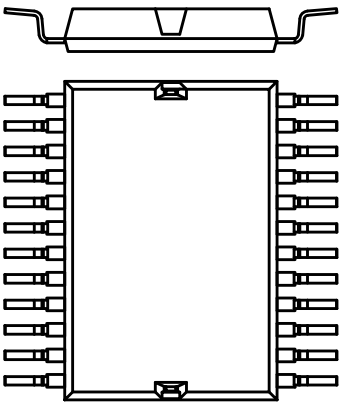

MTI..W...GD
MTC...X..TGD
GMM...
SURFACE MOUNT DEVICE

Outline drawings on
pages O-30...O-55

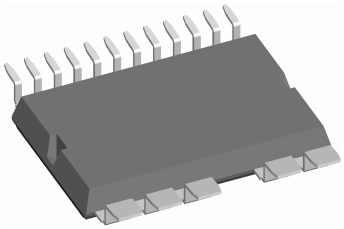

X026c **ISOPLUS-DIL™**

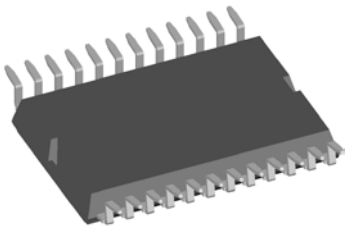

X026d **ISOPLUS-DIL™**

ISOPLUS™ i4-PAC™

3, 4 and 5 leaded packages for various circuit topologies

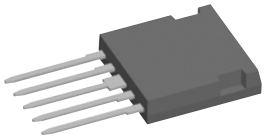

DCB base plate
- 2500 V electrical isolation
- low thermal resistance
- increased power & temperature cycling
- saves space
- replaces multiple discretes
- reduces parasitic inductance and capacitance
- reduces EMI
- less weight

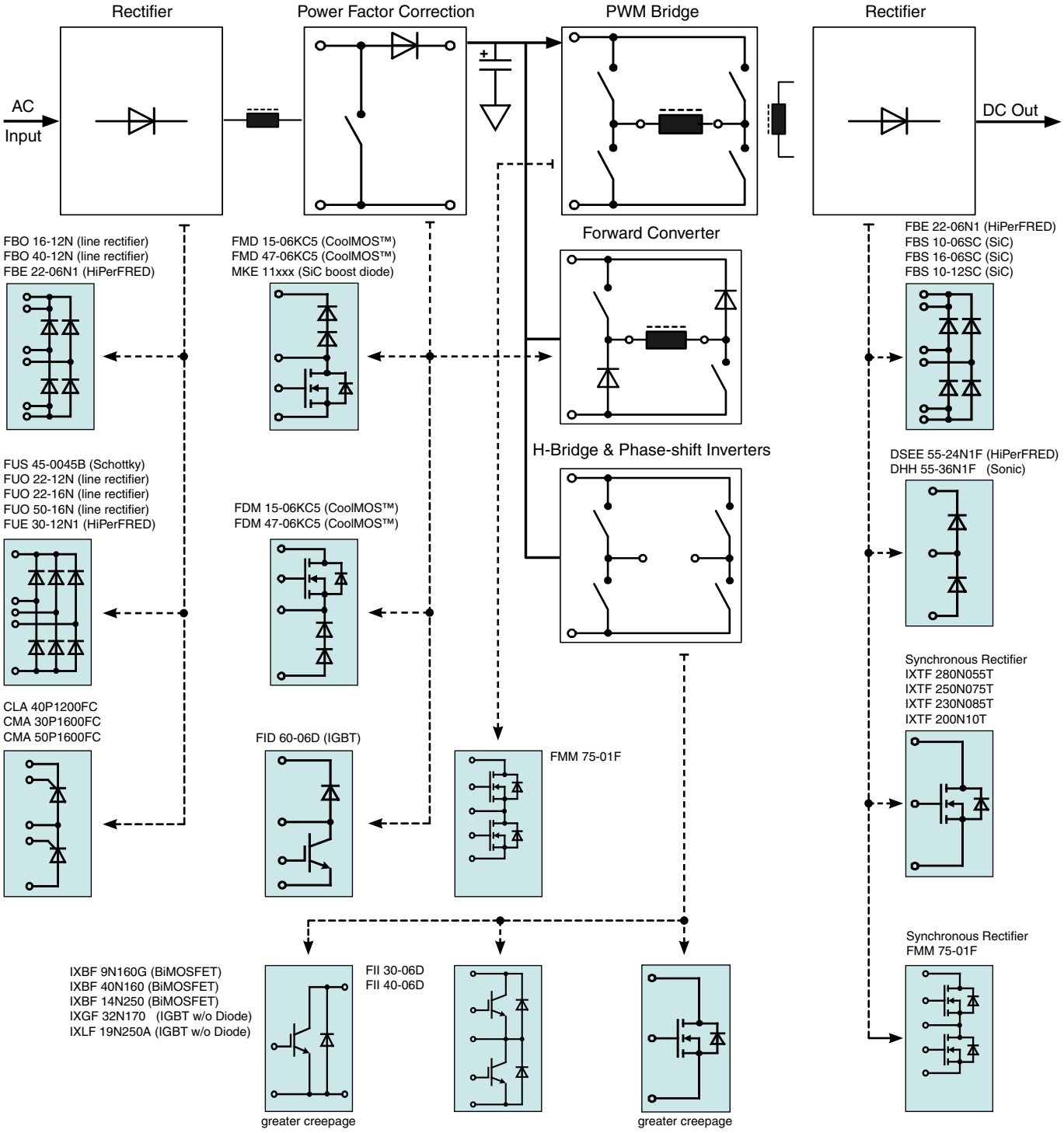

See application note „Combining the features of modules and discretes in a new Power Semiconductor packages“ for general description of the packaging technologies.

See alphanumeric index for the page number of the particular product.

ISOPLUS™ i4-PAC™

IGBTs / MOSFETs

Type ○ Not for new design ➢ New	Configu-ration	Circuit diagram / Technology	V_{DSS} V	I_{D25} T_C = 25°C A	I_{D90} T_C = 90°C A	$R_{DS(on)}$ typ. T_C = 25°C mΩ	Fig. No.
IXTF 280N055T	single	A Trench MOSFET	55	160	*	40	X024d
IXTF 200N10T		A Trench MOSFET	100	90	*	70	
IXKF 40N60SCD1		G CoolMOS™ & serial Schottky & HiPerFRED free wheeling Diode	600	41	29	60	X024a
➢ **IXKF 40N60SCH1**		G CoolMOS™ & serial Schottky & SONIC free wheeling Diode	600	41	29	60	
IXTF 1N250		A High Voltage MOSFET	2500	1	*	40Ω	X024c
IXTF 02N450		A High Voltage MOSFET	4500	0.2	*	750Ω	
IXTF 1N450		A High Voltage MOSFET	4500	0.9	*	85Ω	
FDM 15-06KC5	buck	E CoolMOS™ & HiPerDynFRED	600	15	11	150	X024a
FDM 47-06KC5		E CoolMOS™ & HiPerDynFRED	600	47	32	40	
○ **FMD 21-05QC**	boost	E HiPerFET & HiPerDynFRED	500	21	15	180	
➢ **MPA 22R600DHGFC**		C POLAR™ & SONIC Diode	600	15	11	220	
➢ **MKE 11R600DCGFC**		C CoolMOS™ & SiC Diode	600	15	11	150	
FMD 15-06KC5		D CoolMOS™ & HiPerDynFRED	600	15	11	150	
FMD 40-06KC		D CoolMOS™ & HiPerDynFRED	600	38	25	60	
FMD 47-06KC5		D CoolMOS™ & HiPerDynFRED	600	47	32	40	
FMM 150-0075X2F	phase leg	B Trench MOSFET	75	120	90	5.8	
FMM 75-01F		B HiPerFET	100	75	55	25	
➢ **FMP 76-010T** ①		L Trench™ P & N-Channel	±100	-54 / 62	*	24 / 11	
➢ **FMP 36-015P** ①		L Polar™ P & N-Channel	±150	-22 / 36	*	110 / 40	
➢ **FMP 26-02P** ①		L Polar™ P & N-Channel	±200	-17 / 26	*	170 / 60	
➢ **FMM 60-02TF**		B Trench HiPerFET	200	33	-	40	
➢ **FMM 50-025TF**		B Trench HiPerFET	250	30	-	50	
➢ **FMM 22-05PF**		B PolarHV™ HiPerFET	500	13	-	270	
➢ **FMM 22-06PF**		B PolarHV™ HiPerFET	600	12	-	350	

Type	Configu-ration	Circuit diagram / Technology	V_{CES} V	I_{C25} T_C = 25°C A	I_{C90} T_C = 90°C (110°C) A	$V_{CE(sat)}$ typ. T_C = 25°C mΩ	Fig. No.
IXBF 9N160G	single	I BiMOSFET	1600	7	4	4.9	X024c
IXBF 40N160		I BiMOSFET	1600	28	16	6.2	
IXGF 32N170		H High voltage IGBT	1700	44	(19)	max 3.5	
IXGF 20N250		H High voltage IGBT	2500	23	14	max 3.1	
IXGF 25N250		H High voltage IGBT	2500	30	15	max 2.9	
IXLF 19N250A		H High voltage IGBT	2500	32	19	max 3.9	
IXBF 12N300		I BiMOSFET	3000	26	(11)	2.8	
IXBF 20N300		I BiMOSFET	3000	34	(14)	2.7	
IXGF 20N300		H High voltage IGBT	3000	22	(14)	max 3.2	
IXGF 25N300		H High voltage IGBT	3000	27	(16)	max 3.0	
IXBF 32N300		I BiMOSFET	3000	40	22	2.8	
IXGF 36N300		H High voltage IGBT	3000	36	18	max 2.7	
IXBF 42N300		I BiMOSFET	3000	60	(24)	2.5	
IXBF 55N300		I BiMOSFET	3000	86	(34)	2.7	
IXGF 30N400		H High voltage IGBT	4000	30	15	max 3.1	
FID 60-06D	boost	K NPT IGBT & HiPerFRED	600	65	40	1.6	X024a
FII 30-06D	phase leg	J NPT IGBT	600	30	18	1.9	
FII 40-06D		J NPT IGBT	600	40	25	1.8	

Circuit Diagram

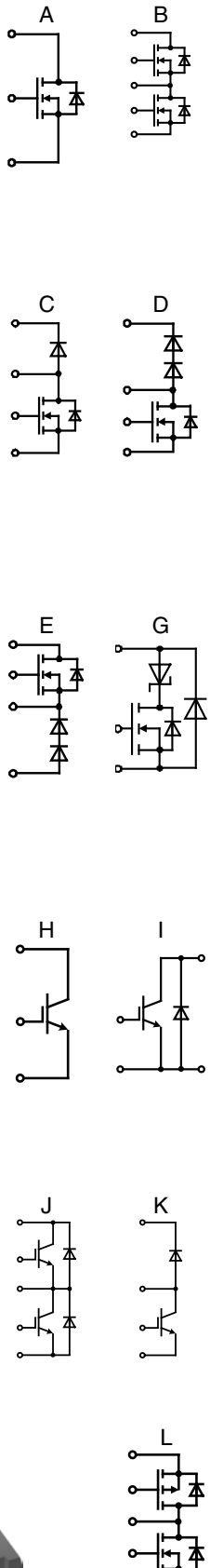

* in progress

CoolMOS™ is a trademark of Infineon Technologies

① high side switch: p-channel; low side switch: n-channel

Outline drawings on pages O-30...O-55

X024a

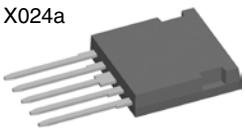

X024b

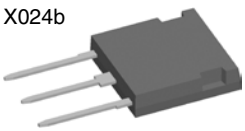

X024c

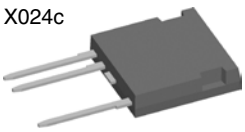

X024d

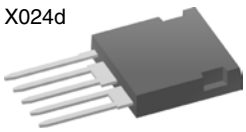

ISOPLUS™ i4-PAC™

Bipolar

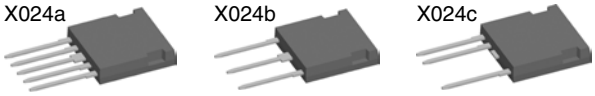

Type ➢ New	Configuration	Circuit diagram / Diode type	Voltage V	$I_{D(AV)M}$ T_C = 90°C A	Fig. No.
➢ **CNA 10E2500FB**	single part, high voltage	R Thyristor	2500	10	X024c
CS 20-22moF1		R Thyristor	2200	18	
CS 20-25mo1F		R Thyristor	2500	18	
DSEE 55-24N1F	phase leg	L HiperFRED	2x 1200	55	X024b
➢ **CLA 40P1200FC**		Q Thyristor	2x 1200	40	X024a
CMA 30P1600FC		Q Thyristor	2x 1600	30	
CMA 50P1600FC		Q Thyristor	2x 1600	50	
DHH 55-36N1F		L Sonic-FRD	2x 1800	50	X024b
FBS 10-06SC	1-phase bridge	M Si-Carbide	600	6.6	X024a
FBS 16-06SC		M Si-Carbide	600	11	
FBE 22-06N1		N HiperFRED	600	20	
FBO 16-12N		N Rectifier	1200	22	
FBS 10-12SC		M Si-Carbide	1200	10	
FBO 40-12N		N Rectifier	1200	40	
FUS 45-0045B	3-phase bridge	P Schottky	45	45	
FUE 30-12N1		O HiperFRED	1200	30	
FUO 22-12N		O Rectifier	1200	27	
FUO 22-16N		O Rectifier	1600	27	
FUO 50-16N		O Rectifier	1600	50	

Circuit Diagram

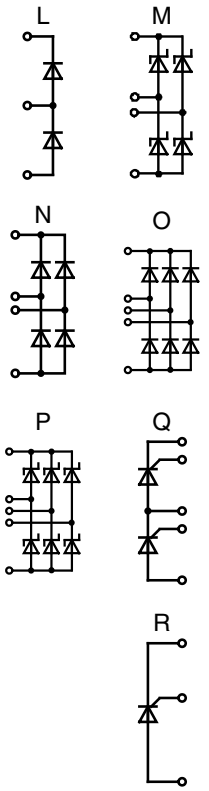

Insulated Gate Bipolar Transistors (IGBT)

The Insulated Gate Bipolar Transistor (IGBT) is a three termil device combining high efficiency with fast switching capabilities. IXYS offers various IGBT technologies optimized for the many topologies, circuits and requirements in today's varied power semiconductor applications. As a guide to the multiple technologies of IGBT on offer from IXYS please refer to the following characteristics.

$V_{CE(sat)}$ – a measure of on-state losses i.e. power dissipation when the device is passing forward current. The higher the $V_{CE(sat)}$ the higher the losses in the forward direction.

Switching Speed – an IGBT with fast switching speed will have higher efficiency during the transition from on to the off state and vice versa. Low switching speed versions are often combined with low $V_{CE(sat)}$ for low frequency applications. Higher speed IGBT tend to have higher $V_{CE(sat)}$.

Temperature Coefficient – this determines the device $V_{CE(sat)}$ trend against temperature. A device is said to have a positive temperature coefficient if the $V_{CE(sat)}$ rises when the junction temperature increases. Likewise a negative temperature coefficient is when the devices $V_{CE(sat)}$ reduces when the junction temperature increases. A positive temperature coefficient is required when operating IGBT in parallel. A negative temperature coefficient device cannot be operated in parallel but may have lower losses at higher temperatures.

Safe Operating Area (SOA) – the ability for an IGBT to sustain voltage and current in shorter time scales without failure. Forward bias (FBSOA) is SOA when turning the IGBT into the on-state. Reverse Bias (RBSOA) is SOA when turning to the off-state. Short circuit SOA (SCSOA) is an indication of ability to withstand surge currents in operation.

Avalanche Rated – the ruggedness of the IGBT in the avalanche region. An avalanche rated devices is far more rugged than altertive devices during operation and is an indication of reliability.

IGBT technology

IGBT Characteristic	Punch Through (PT)			Non-Punch Through (NPT)	XPT Planar	XPT GenX3		XPT Trench		BiMOSFET (RC IGBT)			High voltage IGBT		
Discrete Part No. Prefix	IXG..			IXD..	IXA..	IXY..		IXX..		IXB..			IXG..		
Discrete Part No. Suffix	A	B	C	NONE	NONE	B3	C3	B4	C4	NONE	A (1700V)	C	NONE	A	C
$V_{CE(SAT)}$	LOW	MED.	HIGH	MEDIUM	MED.	MED.	HIGH	LOW	MED.	LOW	MED.	HIGH	LOW	MED.	HIGH
Switching speed	LOW	MED.	HIGH	MEDIUM	MED.	MED.	HIGH	MED.	HIGH	LOW	MED.	MED.	LOW	MED.	MED.
Temperature coefficient	POS	NEG	NEG	POSITIVE	POSITIVE	POSITIVE		POSITIVE		POSITIVE			POSITIVE		
Safe Operating Area	RBSOA			SCSOA RBSOA FBSOA	SCSOA RBSOA FBSOA	SCSOA RBSOA FBSOA		SCSOA RBSOA		SCSOA RBSOA			SCSOA RBSOA FBSOA		
Avalanche rated	NO	NO/ YES	YES	YES	YES	YES		NO		NO			YES		
Voltage range	300-1200V			600-1700V	600-1200V	650 / 650 / 900 /1200V		650V		1600-3000V			1600-4500V		

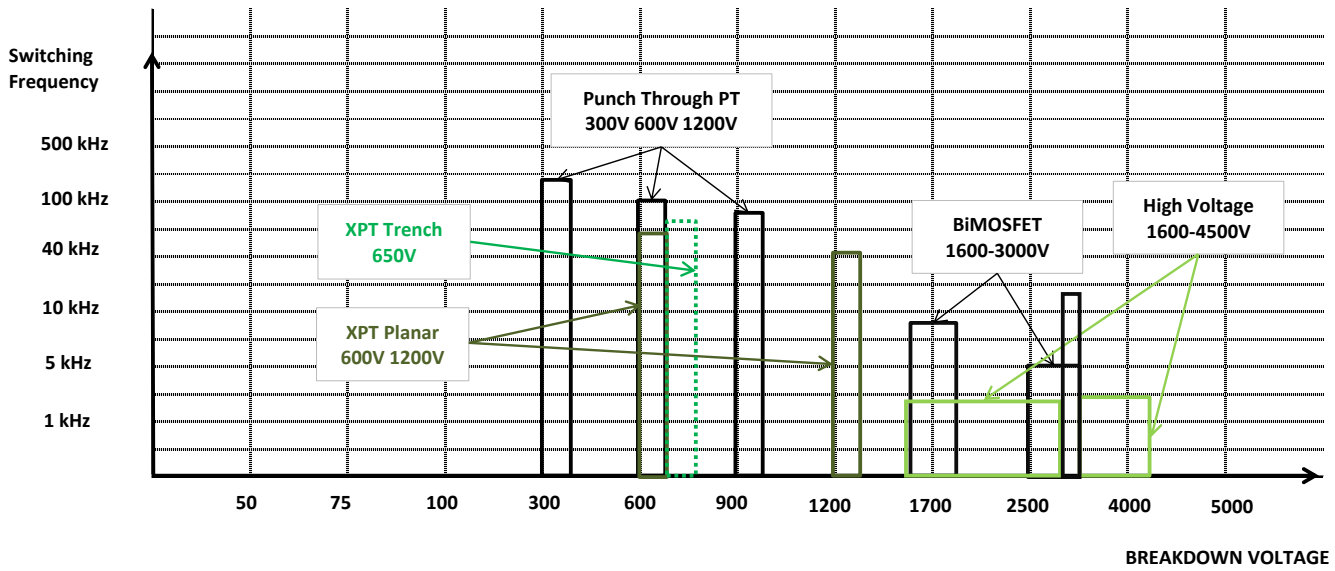

IGBT product families

Xtreme Light Punch Through (XPT) Plar IGBTs
are an extremely rugged technology platform of IGBTs, which are ideal for critical applications that require low conduction and low switching losses with a 10 µs short circuit withstand capability. Either discrete or co-packaged with ultrafast soft recovery Sonic diodes, IXYS XPT IGBTs have lower saturation voltage VCE(sat) and low total switching energy (E_{on} + E_{off}). A large portfolio of module packed XPT Plar are available for applications such as UPS, Motor Drive and solar inverters.

Xtreme Light Punch Through (XPT) Trench IGBTs
are the latest development from IXYS starting at 650V. This range features not only a low $V_{CE(sat)}$ but extremely low switching losses making the platform attractive for fast switching applications whilest retaining good SOA rating and a positive temperature coefficient. Either discrete or co-packaged with ultrafast soft recovery Sonic diodes, IXYS XPT IGBTs have industry leading efficiency at medium to high switching frequency.

G-Series, A, B & C Class (GenX™) (PT) IGBTs
These IGBTs are manufactured using IXYS' advanced GenX™ Punch-Through IGBT process providing lower saturation voltages, and lower switching losses. A, B, C speed classes provide optimum trade off between static (conduction) and dymic (switching) losses. Co-packed variants of these devices are available with IXYS' HiPerFRED™ (suffix "D1") and SONIC-FRD™ (suffix "H1") ultrafast recovery diodes

G-series, B3 & C3 Class (GenX3™) (PT) IGBTs with SiC Anti-Parallel Diode
IXYS has combined the latest Silicon Carbide diode technology with its advanced GenX3™ IGBT platform. The prime benefit presented by these SiC ultra-fast co-packed diodes lies their ability to switch rapidly (<50 ns), with nearly zero reverse recovery charge (Qrr), resulting in negligible commutation losses, reduced turn-on energy (Eon) of the IGBT, and reduced EMI emissions.

1600 V & 1700 V Low Sat IGBTs
These rugged High Voltage NPT devices are designed for capacitor discharge applications, featuring a low saturation voltage, high power density, & high peak current capability. These High Voltage NPT IGBTs eble the elimition of more costly, lower performance solutions such as thyristors or series connected MOSFETs or IGBTs typically used at voltages above 1200 V. Offered as co-packs, they provide a more complete
solution for power conversion applications.

1600 V & 1700 V High Speed IGBTs
This family of 1600/1700 V IGBTs are rugged NPT devices targeted for high voltage applications, requiring 10 µs short circuit withstand capability. They are particularly suitable for high voltage switching applications. IXYS offers its fast switching "A" version 1700 V NPT IGBTs in co-pack and phase-leg configurations for PWM applications with switching frequencies upwards of 50 kHz.

Very High Voltage (2500 V - 4000 V) IGBTs
IXYS' offers a unique portfolio of discrete 2500V, 3000V, and 4000V VHV IGBTs with collector current ratings spanning from 2 A to 75 A (TC = 110˚C). The voltage and current ratings of these devices, coupled with simplified MOS gate-control, allow the system designer to greatly reduce the complexity of many high voltage switching designs. These IGBTs eble the use of a single device in systems whose circuits previously used multiple, cascaded, lower-voltage switches.

B-series (BiMOSFET) IGBTs
IXYS BiMOSFETs are devices which have combined strengths of MOSFETs and IGBTs. BIMOSFETs feature a monolithic intrinsic diode which can reduce die count in many applications.

Discrete XPT

XPT IGBT

XPT = Xtreme light Punch Through, short-circuit rated IGBTs

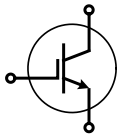

IXX...
IXY...

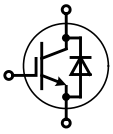

IXX...D1/H1
IXY...D1/H1

Part Number ➢ New	V_{CES} V	I_{C25} T_C = 25°C A	I_{C110} T_C = 110°C A	$V_{CE(sat)}$ T_C = 25°C V	t_{fi} typ. T_J = 150°C ns	E_{off} typ. T_J = 150°C mJ	R_{thJC} K/W	Diode	I_{F110} Diode T_C = 110°C A	R_{thJC} max. Diode K/W	P_C W	Fig. No.	Package style Outline drawings on pages O-30...O-55
600 / 650V GenX3™ XPT™ IGBTs													
IXXH 30N60B3	600	60	30	1.85	180	0.7	0.55				270	X014a	X005a **TO-220AB**
IXXH 30N60B3D1		60	30	1.85	180	0.7	0.55	•	30	0.9	270	X014a	
IXXH 30N60C3D1		60	30	2.2	78	0.4	0.55	•	30	0.9	270	X014a	
IXXH 50N60C3		100	50	2.3	90	0.48	0.25				600	X014a	
IXXH 50N60C3D1		100	50	2.3	90	0.48	0.25	•	30	0.9	600	X014a	
IXXA 50N60B3		120	50	1.8	190	1.2	0.25				600	X011b	X011b **TO-263AB**
IXXH 50N60B3		120	50	1.8	190	1.2	0.25				600	X014a	
IXXH 50N60B3D1		120	50	1.8	190	1.2	0.25	•	30	0.9	600	X014a	
IXXP 50N60B3		120	50	1.8	190	1.2	0.25				600	X005a	
IXXR 100N60B3H1		145	68	1.8	200	2.8	0.31	•	-	0.62	400	X016a	
IXXH 75N60C3		150	75	2.3	80	1.07	0.2				750	X014a	
IXXH 75N60C3D1		150	75	2.3	80	1.07	0.2	•	30	0.9	750	X014a	X011c **TO-263AB**
IXXH 75N60B3		160	75	1.85	170	2.2	0.2				750	X014a	
IXXH 75N60B3D1		160	75	1.85	170	2.2	0.2	•	30	0.9	750	X014a	
IXXK 100N60C3H1		170	-	2.2	115	1.4	0.18	•	65	0.3	695	X020a	
IXXN 100N60B3H1		170	-	1.8	200	2.8	0.25	•	50	0.42	500	X027a	
IXXX 100N60C3H1		170	-	2.2	115	1.4	0.18	•	65	0.3	695	X015a	
IXXH 100N60C3		190	100	2.2	115	1.4	0.18				830	X014a	X014a **TO-247AD**
IXXK 100N60B3H1		200	-	1.8	200	2.8	0.18	•	65	0.3	695	X020a	
IXXN 200N60B3H1		200	98	1.7	215	3.45	0.16	•	30	0.7	780	X027a	
IXXN 200N60C3H1		200	98	2.1	90	2.1	0.16	•	30	0.7	780	X027a	
IXXX 100N60B3H1		200	-	1.8	200	2.8	0.18	•	65	0.3	695	X015a	
IXXH 100N60B3		220	100	1.8	200	2.8	0.18				830	X014a	
IXXN 200N60B3		280	160	1.7	215	3.45	0.16				940	X027a	
IXXK 200N60C3		340	200	2.1	90	2.1	0.092				1630	X020a	X015a **PLUS247**
IXXX 200N60C3		340	200	2.1	90	2.1	0.092				1630	X015a	
IXXK 200N60B3		380	200	1.7	215	3.45	0.092				1630	X020a	
IXXX 200N60B3		380	200	1.7	215	3.45	0.092				1630	X015a	
IXXK 300N60C3		510	300	2	90	2.35	0.065				2300	X020a	
IXXX 300N60C3		510	300	2	90	2.35	0.065				2300	X015a	
IXXK 300N60B3		550	300	1.6	200	3.7	0.065				2300	X020a	
IXXX 300N60B3		550	300	1.6	200	3.7	0.065				2300	X015a	
➢ **IXXA 30N65C3HV**	650	52	30	2.2	78	0.4	0.65				230	X011c	X016a **ISOPLUS247™**
➢ **IXYH 40N650C3H1**		80	40	2.2	80	0.46	0.5	•	29	0.8	300	X014a	
650V GenX4™ XPT™ Trench IGBTs													
➢ **IXXH 30N65B4**	650	65	30	2	100	0.6	0.65				230	X014a	
➢ **IXXH 60N65B4H1**		116	60	2	94	1.34	0.33	•	48	0.62	380	X014a	
➢ **IXXH 60N65B4**		116	60	2	94	1.34	0.33				455	X014a	
➢ **IXXH 60N65C4**		118	60	2.2	47	0.93	0.33				455	X014a	
➢ **IXXH 40N65B4**		120	40	1.8	73	0.78	0.33				455	X014a	X020a **TO-264**
➢ **IXXR 110N65B4H1**		150	70	2.15	105	1.4	0.33	•	48	0.7	455	X016a	
➢ **IXXH 80N65B4**		160	80	2	65	1.65	0.24				625	X014a	
➢ **IXXH 80N65B4H1**		160	80	2	65	1.65	0.24	•	62	0.45	625	X014a	
➢ **IXXN 110N65C4H1**		210	110	2.35	43	0.77	0.2	•	52	0.42	750	X027a	
➢ **IXXN 110N65B4H1**		215	110	2.1	105	1.4	0.2	•	52	0.42	750	X027a	
➢ **IXXH 110N65C4**		234	110	2.35	43	0.77	0.17				880	X014a	
➢ **IXXK 110N65B4H1**		240	110	2.1	105	1.4	0.17	•	52	0.42	880	X020a	X027a **SOT-227B miniBLOC**
➢ **IXXX 110N65B4H1**		240	110	2.1	105	1.4	0.17	•	52	0.42	880	X015a	
➢ **IXXK 160N65C4**		290	160	2.1	57	1.3	0.16				940	X020a	
➢ **IXXX 160N65C4**		290	160	2.1	57	1.3	0.16				940	X015a	
➢ **IXXK 160N65B4**		310	160	1.8	160	2.36	0.16				940	X020a	
➢ **IXXX 160N65B4**		310	160	1.8	160	2.36	0.16				940	X015a	
➢ **IXXK 200N65B4**		370	200	1.7	110	2.54	0.13				1150	X020a	
➢ **IXXX 200N65B4**		370	200	1.7	110	2.54	0.13				1150	X015a	

Discrete XPT

XPT IGBT

XPT = Xtreme light Punch Through

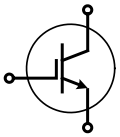

IXY ...

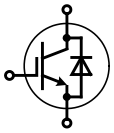

IXY...D1/H1

Part Number ➢ New	V_{CES} V	I_{C25} T_C = 25°C A	I_{C110} T_C = 110°C A	$V_{CE(sat)}$ T_C = 25°C V	t_{fi} typ. T_J = 125°C ns	E_{off} typ. T_J = 125°C mJ	R_{thJC} K/W	Diode	I_{F110} Diode T_C = 110°C A	R_{thJC} max. Diode K/W	P_C W	Fig. No.	Package style Outline drawings on pages O-30...O-55
1200V GenX3™ XPT™ IGBTs													
➢ **IXYJ 20N120C3D1**	1200	16	7	4	° 105	0.7 °	1.78	•	19	1.1	70	X016c	X005a **TO-220AB**
➢ **IXYH 20N120C3D1**	1200	36	17	4	° 105	0.7 °	0.54	•	23	0.9	230	X014a	
➢ **IXYT 20N120C3D1HV**	1200	36	17	4	° 105	0.7 °	0.54	•	23	0.9	230	X019a	
➢ **IXYH 20N120C3**	1200	40	20	4	° 105	0.7 °	0.54				278	X014a	
➢ **IXYP 20N120C3**	1200	40	20	4	° 105	0.7 °	0.54				278	X005a	
➢ **IXYR 50N120C3D1**	1200	56	* 32	4	° 60	1.4 °	0.43	•	25	0.9	290	X016a	
➢ **IXYH 40N120C3D1**	1200	64	* 40	4	38	0.7	0.26	•	25	0.9	480	X014a	X014a **TO-247AD**
➢ **IXYH 30N120C3**	1200	66	30	4	88	0.9	0.3				416	X014a	
➢ **IXYH 30N120C3D1**	1200	66	30	4	88	0.9	0.3	•	25	0.9	416	X014a	
➢ **IXYP 30N120C3**	1200	66	30	4	88	0.9	0.3				416	X005a	
➢ **IXYH 40N120C3**	1200	70	40	4	38	0.7	0.26				577	X014a	
➢ **IXYH 40N120B3D1**	1200	86	40	2.9	206	2.05	0.26	•	25	0.9	480	X014a	
➢ **IXYH 50N120C3D1**	1200	90	** 50	4	° 60	1.4 °	0.2	•	25	0.9	625	X014a	
➢ **IXYH 40N120B3**	1200	96	40	2.9	206	2.05	0.26				577	X014a	X015a **PLUS247**
➢ **IXYH 50N120C3**	1200	100	50	3.5	60	1.4	0.2				750	X014a	
➢ **IXYR 100N120C3**	1200	104	58	3.5	125	3.55	0.31				484	X016a	
➢ **IXYN 82N120C3**	1200	105	46	3.2	95	3.7	0.25				500	X027a	
➢ **IXYN 82N120C3H1**	1200	105	46	3.2	95	3.7	0.25	•	42	0.42	500	X027a	
➢ **IXYN 100N120C3H1**	1200	134	62	3.5	125	3.55	0.18	•	42	0.42	690	X027a	
➢ **IXYN 100N120C3**	1200	152	86	3.5	125	3.55	0.18				830	X027a	
➢ **IXYB 82N120C3H1**	1200	160	82	3.2	95	3.7	0.12	•	42	0.35	1040	X021a	X016a **ISOPLUS247™**
➢ **IXYH 82N120C3**	1200	160	82	3.2	95	3.7	0.12				1040	X014a	
➢ **IXYN 100N120B3H1**	1200	165	76	2.6	° 260	10.1 °	0.18	•	42	0.42	690	X027a	
➢ **IXYK 100N120C3**	1200	188	100	3.5	125	3.55	0.13				1150	X020a	
➢ **IXYX 100N120C3**	1200	188	100	3.5	125	3.55	0.13				1150	X015a	
➢ **IXYK 120N120C3**	1200	220	120	3.5	° 120	5.3 °	0.1				1500	X020a	
➢ **IXYX 120N120C3**	1200	220	120	3.5	° 120	5.3 °	0.1				1500	X015a	
➢ **IXYK 100N120B3**	1200	225	100	2.6	° 260	10.1 °	0.13				1150	X020a	X016c **ISO247™**
➢ **IXYX 100N120B3**	1200	225	100	2.6	° 260	10.1 °	0.13				1150	X015a	

* T_C = 90°C ° T_J = 150°C

** T_C = 100°C

X027a **SOT-227B miniBLOC**

X021a **PLUS264**

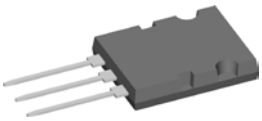

X019a **TO-268AA**

X020a **TO-264**

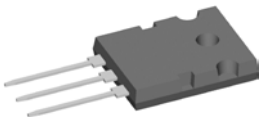

Discrete XPT / NPT IGBT

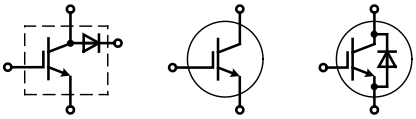

IXA...R... IXA...I... IXD.. IXA...IF... IXD ...D1

XPT IGBT

NPT = Non Punch Through

Type ○ Not for new design ➢ New ✧ under development	V_{CES} V	I_{C25} IGBT $T_C = 25°C$ A	I_{C90} IGBT $T_C = 90°C$ A	V_{CEsat} typ IGBT $T_J = 25°C$ V	E_{off} IGBT $T_J = 125°C$ mJ	R_{thJC} IGBT K/W	Diode	I_{F90} Diode $T_C = 90°C$ A	Fig. No.
600 / 650 V XPT IGBT									
✧ **IXB 80IF600NA**	600	120	80	*	*	*	•	*	X027a
✧ **IXB 200I600NA**		300	200	*	*	*		-	X027a
✧ **IXD 75IF650NA**	650	115	75	*	*	*	•	*	X027a
✧ **IXA 90IF650NA**		135	90	*	*	*	•	*	X027a
✧ **IXA 220I650NA**		335	220	*	*	*		-	X027a
1200 V XPT IGBT									
IXA 4IF1200UC	1200	9	5	1.8	0.25	2.70	•	6	X004
➢ **IXA 4IF1200TZ**		9	5	1.8	0.25	2.70	•	6	X019a
IXA 12IF1200HB		20	13	1.8	1.10	1.50	•	14	X014a
IXA 12IF1200PB		20	13	1.8	1.10	1.50	•	14	X005a
➢ **IXA 12IF1200PZ**		20	13	1.8	1.10	1.50	•	14	X011c
IXA 12IF1200TC		20	13	1.8	1.10	1.50	•	14	X019
IXA 17IF1200HJ		28	18	1.8	1.70	1.26	•	19	X016a
IXA 20IF1200HB		38	22	1.8	1.70	0.76	•	24	X014a
IXA 20I1200PB		38	22	1.8	1.70	0.76		-	X005a
➢ **IXA 20I1200PZ**		38	22	1.8	1.70	0.76		-	X011c
IXA 27IF1200HJ		43	27	1.8	3.00	0.84	•	25	X016a
IXA 33IF1200HB		58	34	1.8	3.00	0.50	•	33	X014a
IXA 37IF1200HJ		58	37	1.8	4.10	0.64	•	25	X016a
IXA 45IF1200HB		78	45	1.8	4.10	0.38	•	33	X014a
IXA 55I1200HJ		84	54	1.8	5.50	0.43		-	X016a
IXA 60IF1200NA		88	56	1.8	5.50	0.43	•	51	X027a
IXA 70I1200NA		100	65	1.8	5.50	0.35		-	X027a
➢ **IXA 70R1200NA****		100	65	1.8	5.50	0.35	•	55	X027a

* in progress; ** boost configuration

Package style

Outline drawings on pages O-30...O-55

X004 **TO-252AA**

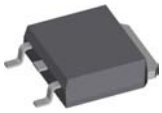

X005a **TO-220AB**

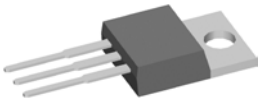

X011b **TO-263AB**

X011c **TO-263AB**

X014a **TO-247AD**

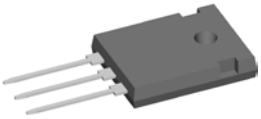

X016a **ISOPLUS247™**

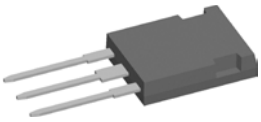

X019 **TO-268AA**

X019a **TO-268AA**

X027a **SOT-227B miniBLOC**

NPT IGBT

NPT = Non Punch Through

600 V NPT IGBT									
IXDP 20N60B	600	32	20	2.2	0.4	0.90		-	X005a
IXDP 20N60BD1		32	20	2.2	0.4	0.90	•	14	X005a
○ **IXDP 35N60B**		60	35	2.1	0.8	0.50		-	X005a
○ **IXDH 35N60B**		60	35	2.1	0.8	0.50		-	X014a
IXDH 35N60BD1		60	35	2.1	0.8	0.50	•	21	X014a
○ **IXDR 35N60BD1**		60	24	2.1	0.8	1.00	•	18	X016a
1200 V NPT IGBT									
IXDA 20N120AS	1200	34	25	2.8	2.4	0.63		-	X011b
IXDH 20N120		38	25	2.4	2.4	0.63		-	X014a
IXDH 20N120D1		38	25	2.4	2.4	0.63	•	20	X014a
○ **IXDH 30N120**		60	38	2.4	3.4	0.42		-	X014a
○ **IXDH 30N120D1**		60	38	2.4	3.4	0.42	•	35	X014a
○ **IXDR 30N120**		50	30	2.4	3.4	0.60		-	X016a
○ **IXDR 30N120D1**		50	30	2.4	3.4	0.60	•	27	X016a
IXDN 55N120D1		100	62	2.3	6.2	0.28	•	60	X027a
IXDN 75N120		150	95	2.2	10.5	0.19		-	X027a

PT IGBTs

G Series A3, B3, C3 IGBTs

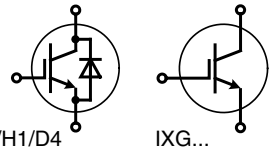

IXG...D1/H1/D4 IXG...

Part Type ➢ New	V_{CES} V	I_C T_C = 25°C A	I_C T_C = 110°C A	$V_{CE(sat)}$ T_C = 25°C V	t_{fi} typ T_J = 25°C ns	E_{off} typ T_J = 125°C mJ	R_{thJC} K/W	Diode	R_{thJC} Diode K/W	P_C W	Fig. No.	Package Style Outline drawings on pages O-30...O-55
IXGH 100N30B3	300	75	100	1.7	33		0.27	-		460	X014a	X005a **TO-220AB**
IXGH 120N30B3		75	120	1.7	64		0.23	-		540	X014a	
IXGH 60N30C3		75	60	1.8	68	0.3	0.42	-		300	X014a	
IXGH 85N30C3		75	85	1.9	70	0.39	0.375	-		333	X014a	
IXGH 100N30C3		75	100	1.85	94	0.52	0.27	-		460	X014a	X011b **TO-263AB**
IXGH 120N30C3		75	120	2.1	86	0.73	0.23	-		540	X014a	
IXGK 400N30A3		400	200	1.15	107		0.125	-		1000	X020a	
IXGN 400N30A3		400	200	1.15	107		0.17	-		735	X027a	
IXGX 400N30A3		400	200	1.15	107		0.125	-		1000	X015a	
IXGA 42N30C3			42	1.8	65	0.2	0.56	-		223	X011b	X014a **TO-247AD**
IXGH 42N30C3			42	1.8	65	0.2	0.56	-		223	X014a	
IXGP 42N30C3			42	1.8	65	0.2	0.56	-		223	X005a	
IXGR 48N60C3D1	600	56	26	2.7	38	0.57	1	•	1.5	125	X016a	
IXGA 30N60C3		60	30	3	47	0.33	0.56	-		220	X011b	
IXGA 30N60C3D4		60	30	3	47	0.33	0.56	•	2.5	220	X011b	X015a **PLUS247**
IXGH 30N60C3		60	30	3	47	0.33	0.56	-		220	X014a	
IXGH 30N60C3D1		60	30	3	47	0.33	0.56	•	0.9	220	X014a	
IXGP 30N60C3		60	30	3	47	0.33	0.56	-		220	X005a	
IXGP 30N60C3D4		60	30	3	47	0.33	0.56	•	2.5	220	X005a	
IXGR 48N60B3		60	27	2.1	116	1.3	0.83	-		150	X016a	X016a **ISOPLUS247™**
IXGR 48N60B3D1		60	27	2.1	116	1.3	0.83	•	1.5	150	X016a	
IXGT 30N60C3D1		60	30	3	47	0.33	0.56	•	0.9	220	X019	
IXGP 30N60C3C1		60	30	3	47	0.33	0.56	•	1.1	220	X005a	
IXGH 28N60B3D1		66	28	1.8	100	1	0.66	•	1	190	X014a	
IXGA 48N60C3		75	48	2.5	38	0.57	0.42	-		300	X011b	X019 **TO-268AA**
IXGB 200N60B3		75	200	1.5	183	4.2	0.1	-		1250	X021a	
IXGH 36N60A3D4		75	36	1.4	325	5.3	0.56	•	2.5	220	X014a	
IXGH 48N60A3D1		75	48	1.35	224	5.6	0.42	•	0.9	300	X014a	
IXGH 48N60C3		75	48	2.5	38	0.57	0.42	-		300	X014a	
IXGH 48N60C3D1		75	48	2.5	38	0.57	0.42	•	0.9	300	X014a	
IXGH 60N60C3		75	60	2.5	50	0.8	0.33	-		380	X014a	X020a **TO-264**
IXGH 60N60C3D1		75	60	2.5	50	0.8	0.33	•	0.9	380	X014a	
IXGH 72N60A3		75	72	1.35	250	6.5	0.23	-		540	X014a	
IXGH 72N60B3		75	72	1.8	90	2.2	0.23	-		540	X014a	
IXGH 72N60C3		75	72	2.5	55	0.93	0.23	-		540	X014a	
IXGH 90N60B3		75	90	1.8	148	2.8	0.19	-		660	X014a	X021a **PLUS264**
IXGK 72N60A3H1		75	72	1.35	250	6.5	0.23	•	0.3	540	X020a	
IXGK 72N60B3H1		75	72	1.8	92	2.2	0.23	•	0.3	540	X020a	
IXGP 48N60C3		75	48	2.5	38	0.57	0.42	-		300	X005a	
IXGR 60N60C3D1		75	30	2.5	50	0.8	0.73	•	1.5	170	X016a	
IXGR 72N60A3H1		75	72	1.35	250	6.5	0.62	•	0.8	200	X016a	X027a **SOT-227B miniBLOC**
IXGR 72N60B3D1		75	40	1.8	90	2.2	0.62	•	0.85	200	X016a	
IXGR 72N60B3H1		75	40	1.8	92	2.2	0.62	•	0.8	200	X016a	
IXGR 72N60C3D1		75	35	2.7	55	0.93	0.62	•	0.85	200	X016a	
IXGT 60N60C3D1		75	60	2.5	50	0.8	0.33	•	0.9	380	X019	
IXGT 72N60A3		75	72	1.35	250	6.5	0.23	-		540	X019	

PT IGBTs

G Series A3, B3, C3 IGBTs

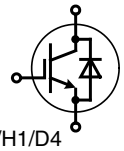
IXG...D1/H1/D4

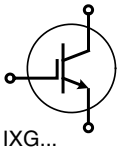
IXG...

Part Type ➢ New	V_{CES} V	I_C T_C = 25°C A	I_C T_C = 110°C A	$V_{CE(sat)}$ T_C = 25°C V	t_{fi} typ T_J = 25°C ns	E_{off} typ T_J = 125°C mJ	R_{thJC} K/W	Diode	R_{thJC} Diode K/W	P_C W	Fig. No.	Package Style (Outline drawings on pages O-30...O-55)
IXGT 72N60B3	600	75	72	1.8	90	2.2	0.23			540	X019	X005a TO-220AB
IXGX 72N60A3H1		75	72	1.35	250	6.5	0.23	•	0.3	540	X015a	
IXGX 72N60B3H1		75	72	1.8	92	2.2	0.23	•	0.3	540	X015a	
IXGX 72N60C3H1		75	72	2.5	55	0.93	0.23	•	0.3	540	X015a	
IXGN 72N60C3H1		78	52	2.5	55	0.93	0.35	•	0.42	360	X027a	X011b TO-263AB
IXGH 36N60B3		92	36	1.8	100	1.5	0.5			250	X014a	
IXGH 56N60B3		130	56	1.8	95	2.2	0.375			330	X014a	
IXGL 200N60B3		150	90	1.5	183	4.2	0.31			400	X022a	
IXGH 56N60A3		150	56	1.35	315	6.75	0.375			330	X014a	X014a TO-247AD
IXGN 72N60A3		160	68	1.35	250	6.5	0.35			360	X027a	
IXGH 36N60B3D1		200	36	1.8	100	1.5	0.5	•	0.9	250	X014a	
IXGH 36N60B3D4		200	36	1.8	100	1.5	0.5	•	2.5	250	X014a	
IXGK 120N60A3		200	120	1.35	260	10.4	0.16			780	X020a	X015a PLUS247
IXGN 120N60A3		200	120	1.35	260	10.4	0.21			595	X027a	
IXGN 120N60A3D1		200	120	1.35	260	10.4	0.21	•	0.85	595	X027a	
IXGX 120N60A3		200	120	1.35	260	10.4	0.16			780	X015a	
IXGA 48N60B3		280	48	1.8	116	1.3	0.42			300	X011b	X016a ISOPLUS247™
IXGH 48N60B3		280	48	1.8	116	1.3	0.42			300	X014a	
IXGK 120N60B3		280	120	1.8	145	4.7	0.16			780	X020a	
IXGP 48N60B3		280	48	1.8	116	1.3	0.42			300	X005a	
IXGX 120N60B3		280	120	1.8	145	4.7	0.16			780	X015a	
IXGN 200N60B3		300	200	1.5	183	4.2	0.15			830	X027a	X019 TO-268AA
IXGK 320N60A3		320	210	1.25	740		0.125			1000	X020a	
IXGN 320N60A3		320	170	1.25	740		0.17			735	X027a	
IXGX 320N60A3		320	210	1.25	740		0.125			1000	X015a	
IXGH 56N60B3D1		350	56	1.8	95	2.2	0.375	•	1.5	330	X014a	X020a TO-264
IXGK 64N60B3D1		400	64	1.8	88	1.95	0.27	•	1.35	460	X020a	
IXGN 400N60A3		400	190	1.25	270		0.15			830	X027a	
IXGX 64N60B3D1		400	64	1.8	88	1.95	0.27	•	1.35	460	X015a	
MMIX 1G320N60B3		400	180	1.5	165	5.4	0.125			1000	X031a	X022a ISOPLUS264™
IXGN 400N60B3		430	200	1.4	125	4.25	0.125			1000	X027a	
IXGK 320N60B3		500		1.6	165	5.4	0.073			1700	X020a	
IXGX 320N60B3		500		1.6	165	5.4	0.073			1700	X015a	
IXGA 36N60A3			36	1.4	325	5.3	0.56			220	X011b	
IXGA 48N60A3			48	1.35	224	5.6	0.42			300	X011b	X027a SOT-227B miniBLOC
IXGH 36N60A3			36	1.4	325	5.3	0.56			220	X014a	
IXGH 48N60A3			48	1.35	2.24	5.6	0.42			300	X014a	
IXGH 48N60B3D1			48	1.8	116	1.3	0.42	•	1.5	300	X014a	
IXGH 64N60A3			64	1.35	222	6	0.27			460	X014a	
IXGH 64N60B3			64	1.8	88	1.95	0.27			460	X014a	
IXGP 36N60A3			36	1.4	325	5.3	0.56			220	X005a	X031a SMPD-X
IXGP 48N60A3			48	1.35	224	5.6	0.42			300	X005a	
IXGR 64N60A3			47	1.35	222	6.03	0.62			200	X016a	
IXGR 72N60A3			52	1.35	250	6.5	0.62			200	X016a	
IXGT 64N60A3			64	1.35	222	6	0.27			460	X019	
IXGT 64N60B3			64	1.8	88	1.95	0.27			460	X019	

PT IGBTs

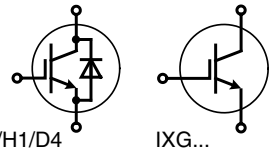

IXG...D1/H1/D4 IXG...

G Series A3, B3, C3 IGBTs

Part Type ➢ New	V_{CES} V	I_C T_C = 25°C A	I_C T_C = 110°C A	$V_{CE(sat)}$ T_C = 25°C V	t_{fi} typ T_J = 25°C ns	E_{off} typ T_J = 125°C mJ	R_{thJC} K/W	Diode	R_{thJC} Diode K/W	P_C W	Fig. No.
IXGH 32N100A3	1000	75	32	2.2	540	13	0.42			300	X014a
IXGT 32N100A3		75	32	2.2	540	13	0.42			300	X019
IXGA 12N120A3	1200	22		3	1035		1.25			100	X011b
IXGH 12N120A3		22		3	1035		1.25			100	X014a
IXGP 12N120A3		22		3	1035		1.25			100	X005a
IXGA 20N120B3		36		3.1	155	1.63	0.69			180	X011b
IXGP 20N120B3		36		3.1	155	1.63	0.69			180	X005a
IXGA 20N120A3		40	20	2.5	715	10.1	0.69			180	X011b
IXGH 20N120A3		40	20	2.5	715	10.1	0.69			180	X014a
IXGP 20N120A3		40	20	2.5	715	10.1	0.69			180	X005a
IXGH 30N120B3D1		50	30	3.5	204	5.1	0.42	•	0.9	300	X014a
IXGT 30N120B3D1		50	30	3.5	204	5.1	0.42	•	0.9	300	X019
IXGA 30N120B3		60	30	3.5	204	5.1	0.42			300	X011b
IXGH 30N120B3		60	30	3.5	204	5.1	0.42			300	X014a
IXGP 30N120B3		60	30	3.5	204	5.1	0.42			300	X005a
IXGR 55N120A3H1		70	30	2.35	282	29	0.62	•	0.42	200	X016a
IXGH 32N120A3		75		2.35	1240		0.42			300	X014a
IXGT 32N120A3		75	32	2.35	1240		0.42			300	X019
IXGK 55N120A3H1		125	55	2.3	282	29	0.27	•	0.42	460	X020a
IXGX 55N120A3H1		125	55	2.3	282	29	0.27	•	0.42	460	X015a
IXGN 82N120B3H1		145	64	3.2	100	7.1	0.21	•	0.42	595	X027a
IXGK 120N120B3		200		3	145	10.3	0.15			830	X020a
IXGX 120N120B3		200		3	145	10.3	0.15			830	X015a
IXGK 82N120B3		230	82	3.2	100	7.1	0.1			1250	X020a
IXGX 82N120B3		230	82	3.2	100	7.1	0.1			1250	X015a
IXGK 120N120A3		240	120	2.2	325	58	0.15			830	X020a
IXGX 120N120A3		240	120	2.2	325	58	0.15			830	X015a
IXGK 82N120A3		260	82	2.05	780	22.5	0.1			1250	X020a
IXGX 82N120A3		260	82	2.05	780	22.5	0.1			1250	X015a

Package Style

Outline drawings on pages O-30...O-55

X005a **TO-220AB**

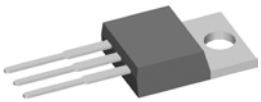

X011b **TO-263AB**

X014a **TO-247AD**

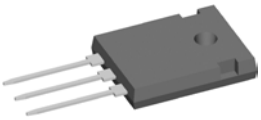

X015a **PLUS247**

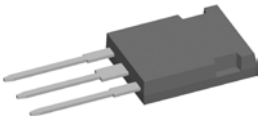

X016a **ISOPLUS247™**

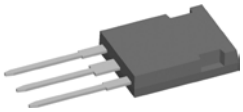

X016c **ISO247™**

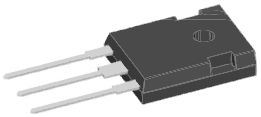

X017a **TO-3P**

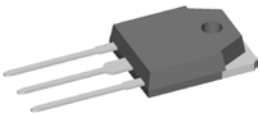

X019 **TO-268AA**

X020a **TO-264**

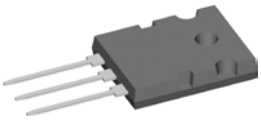

X027a **SOT-227B miniBLOC**

G-Series B4, C4 IGBTs

Part Type ➢ New	V_{CES} V	I_C T_C = 25°C A	I_C T_C = 110°C A	$V_{CE(sat)}$ T_C = 25°C V	t_{fi} typ T_J = 25°C ns	E_{off} typ T_J = 125°C mJ	R_{thJC} K/W	Diode	I_{F110} Diode T_C = 110°C A	R_{thJC} Diode K/W	P_C W	Fig. No.
➢ **IXGJ 50N60C4D1**	600	52	21	2.5	63	0.9	1	•	12	2	125	X016c
IXGH 24N60C4		56	24	2.7	68	0.5	0.65				190	X014a
IXGH 24N60C4D1		56	24	2.7	68	0.5	0.65	•	18	1.6	190	X014a
IXGP 24N60C4		56	24	2.7	68	0.5	0.65				190	X005a
IXGP 24N60C4D1		56	24	2.7	44	0.52	0.65	•	30	2.5	190	X005a
IXGP 30N60B4D1		56	30	1.7	88	1.5	0.66	•	10	2.5	190	X005a
IXGH 30N60B4		66	30	1.7	88	1.5	0.66				190	X014a
IXGA 50N60C4		90	46	2.3	63	0.9	0.42				300	X011b
IXGH 50N60C4		90	46	2.3	63	0.9	0.42				300	X014a
IXGH 50N60C4D1		90	46	2.3	63	0.9	0.42	•	18	1.6	300	X014a
IXGP 50N60C4		90	46	2.3	63	0.9	0.42				300	X005a
IXGQ 50N60C4D1		90	46	2.3	63	0.9	0.42	•	18	1.6	300	X017a
IXGA 50N60B4		100	50	1.8	80	1.9	0.42				300	X011b
IXGH 50N60B4		100	50	1.8	80	1.9	0.42				300	X014a
IXGH 50N60B4D1		100	50	1.8	80	1.9	0.42	•	18	1.6	300	X014a
IXGP 50N60B4		100	50	1.8	80	1.9	0.42				300	X005a
IXGQ 50N60B4D1		100	50	1.8	80	1.9	0.42	•	18	1.6	300	X017a

Fast PT IGBTs with SiC Anti-Parallel Diode

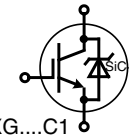

IXG....C1

Part Type ➢ New	V_{CES} V	I_C T_C = 25°C A	I_C T_C = 110°C A	$V_{CE(sat)}$ T_C = 25°C V	t_{fi} typ T_J = 25°C ns	E_{off} typ T_J = 125°C mJ	R_{thJC} K/W	Diode	I_{F110} Diode T_C = 110°C A	R_{thJC} Diode K/W	P_C W	Fig. No.
➢ **IXGA 30N60C3C1**	600	60	30	3.0	47	0.33	0.56	•	13	1.1	220	X011b
➢ **IXGH 30N60C3C1**		60	30	3.0	47	0.33	0.56	•	13	1.1	220	X014a
➢ **IXGP 30N60C3C1**		60	30	3.0	47	0.33	0.56	•	13	1.1	220	X005a
➢ **IXGR 60N60C3C1**		75	30	2.5	50	0.80	0.73	•	13	1.75	170	X016a
➢ **IXGH 36N60B3C1**		75	36	1.8	100	1.50	0.50	•	20	0.9	250	X014a
➢ **IXGR 60N60C2C1**		75	39	2.7	54	1.20	0.50	•	14	1.75	250	X016a
➢ **IXGH 48N60B3C1**		75	48	1.8	116	1.30	0.42	•	20	0.9	300	X014a
➢ **IXGH 48N60C3C1**		75	48	2.5	38	0.57	0.42	•	20	0.9	300	X014a

Package Style

Outline drawings on pages O-30...O-55

X005a **TO-220AB**

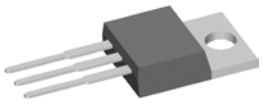

X011b **TO-263AB**

X014a **TO-247AD**

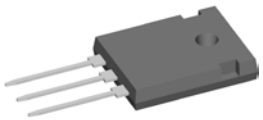

X015a **PLUS247**

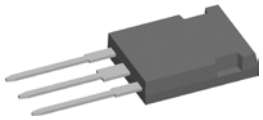

High Voltage NPT IGBTs

1600/1700 V Low On-State Voltage NPT IGBTs

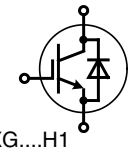

IXG....H1

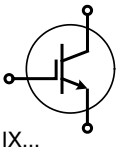

IX...

Part Type	V_{CES} V	I_C T_C = 25°C A	I_C T_C = 90°C (110°C) A	$V_{CE(sat)}$ T_C = 25°C V	E_{off} typ T_J = 125°C mJ	R_{thJC} K/W	Diode	Fig. No.
IXGH 25N160	1600	75	(25)	2.5		0.42		X014a
IXGT 25N160		75	(25)	2.7		0.42		X019
IXGR 50N160H1		75	(36)	2.3		0.52	•	X016a
IXGH 6N170	1700	12	6	4.0	2	1.65		X014a
IXGT 6N170		12	6	4.0	2	1.65		X019
IXGH 10N170		20	10	4.0		1.10		X014a
IXGT 10N170		20	10	4.0		1.10		X019
IXGH 16N170		32	16	3.5	11.2	0.65		X014a
IXGT 16N170		32	16	3.5	11.2	0.65		X019
IXGR 32N170H1		38	20	3.5	13.6	0.65	•	X016a
IXGF 32N170		44	(19)	3.5	13.5	0.62		X024c
IXGH 24N170		50	24	3.3	12	0.5		X014a
IXGT 24N170		50	24	3.3	12	0.5		X019
IXGH 32N170		75	32	3.3	14	0.35		X014a
IXGT 32N170		75	32	3.3	14	0.35		X019
IXGX 32N170H1		75	32	3.3	22	0.35	•	X015a
IXGN 100N170		160	95	3.0		0.17		X027a
IXGX 100N170		170	100	3.0		0.15		X015a
IXGK 100N170		170	100	3.0		0.15		X020a

X016a **ISOPLUS247™**

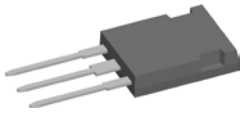

X019 **TO-268AA**

X020a **TO-264**

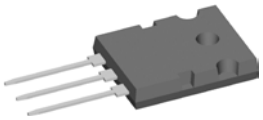

X024c **ISOPLUS i4-PAC™**

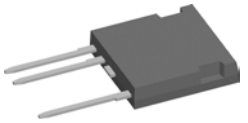

High Voltage NPT IGBTs

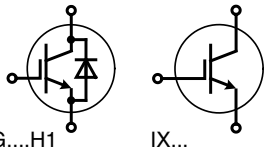

IXG....H1 IX...

1700 V NPT IGBTs

Part Type ➢ New	V_{CES} V	I_C T_C = 25°C A	I_C T_C = 90°C (110°C) A	$V_{CE(sat)}$ T_C = 25°C V	t_{fi} typ T_J = 25°C ns	E_{off} typ T_J = 125°C mJ	R_{thJC} K/W	Diode	I_{F90} Diode T_C = 90°C A	R_{thJC} Diode K/W	Fig. No.
IXGR 6N170A	1700	5.5	(2.5)	7	32	0.25	2.5				X016a
IXGH 6N170A		6	3	7	32	0.26	1.65				X014a
IXGT 6N170A		6	3	7	32	0.26	1.65				X019
IXGH 10N170A		10	5	6	35	0.6	0.89				X014a
IXGT 10N170A		10	5	6	35	0.6	0.89				X019
IXGH 16N170A		16	11	5	70	2	0.65				X014a
IXGH 16N170AH1		16	11	5	70	2	0.65	•	17	0.9	X014a
IXGR 16N170AH1		16	8	5	40	1.1	1.04	•	15	1.5	X016a
IXGT 16N170A		16	11	5	70	2	0.65				X019
IXGT 16N170AH1		16	11	5	70	2	0.65	•	17	0.9	X019
IXGH 24N170A		24	16	6	40	1.47	0.5				X014a
IXGH 24N170AH1		24	16	6	40	1.47	0.5	•	16	0.9	X014a
IXGT 24N170A		24	16	6	40	1.47	0.5				X019
IXGT 24N170AH1		24	16	6	40	1.47	0.5	•	16	0.9	X019
IXGR 32N170AH1		26	14	5.2	50	2.4	0.65	•	14	1.5	X016a
IXGH 32N170A		32	21	5	50	2.4	0.35				X014a
IXGT 32N170A		32	21	5	50	2.4	0.35				X019
IXGX 32N170AH1		32	21	5	50	1.7	0.35	•	18	0.35	X015a

Package style

Outline drawings on pages O-30...O-55

X013 **PLUS220 (SMD)**

X014a **TO-247AD**

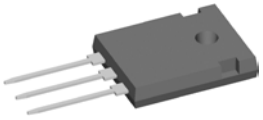

X015a **PLUS247**

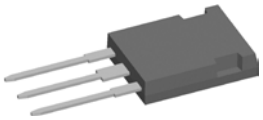

X016a **ISOPLUS247™**

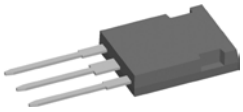

X011c **TO-268AA**

X019 **TO-268AA**

X019a **TO-268AA**

X020a **TO-264**

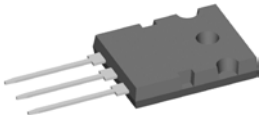

X022e **ISOPLUS264™**

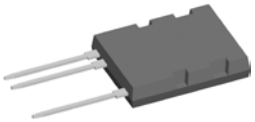

X024c **ISOPLUS i4-PAC™**

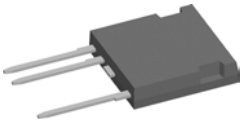

X027a **SOT-227B miniBLOC**

Very High Voltage NPT IGBTs

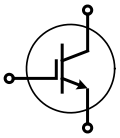

2.5 kV - 4 kV NPT IGBT

Part Type ➢ New	V_{CES} V	I_{C25} T_C = 25°C A	I_{C110} T_C = 110°C (90°C) A	$V_{CE(sat)}$ T_C = 25°C V	t_{fi} typ T_J = 25°C ns	E_{off} typ T_J = 125°C mJ	R_{thJC} IGBT K/W	P_C W	Fig. No.
IXGH 2N250	2500	5.5	2	3.1	100		3.90	32	X014a
IXGT 2N250		5.5	2	3.1	100		3.90	32	X019
IXGH 4N250C		13	4	6.0	29	0.8	0.82	150	X014a
IXGT 4N250C		13	4	6.0	29	0.8	0.82	150	X019
IXGF 20N250		23	(14)	3.1	930		1.25	100	X024c
➢ **IXGA 20N250HV**		30	12	3.1	930		0.83	150	X011c
IXGF 25N250		30	15	2.9	200		1.10	114	X024c
IXLF 19N250A		32	19	3.9	250	30	0.50	250	X024c
IXGH 25N250		60	25	2.9	200		0.50	250	X014a
IXGT 25N250		60	25	2.9	200		0.50	250	X019
➢ **IXGT 25N250HV**		60	25	2.9	200		0.50	250	X019a
IXGL 75N250		110	(65)	2.9	455		0.29	430	X022e
IXGK 75N250		170	75	2.7	455		0.16	780	X020a
IXGX 75N250		170	75	2.7	455		0.16	780	X015a
IXGH 10N300	3000	18	(10)	3.5	530		1.25	100	X014a
IXGF 20N300		22	(14)	3.2	210		1.25	100	X024c
IXGF 25N300		27	(16)	3.0	500		1.10	114	X024c
IXGF 36N300		36	18	2.7	540		0.78	160	X024c
IXGF 30N400	4000	30	15	3.1	514		0.78	160	X024c
IXEL 40N400		90	40	3.5	425	205	0.26	380	X022e
➢ **IXA 40I4000KN**		90	40	3.2	*	135	0.26	380	X022e

BiMOSFETs (Monolithic Bipolar MOS Transistors)

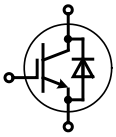

Type ➢ New	V_{CES} V	I_{C25} T_C = 25°C A	I_{C90} T_C = 90°C (110°C) A	$V_{CE(sat)}$ typ (max) T_C = 25°C (110°C) V	Q_G typ nC	t_f typ T_C = 125°C ns	R_{thJC} max. K/W	Fig. No.	Package style Outline drawings on pages O-30...O-55
IXBH 5N160G	1600	5.7	3.5	4.9	26	70	1.85	X014a	X005a TO-220AB
IXBP 5N160G		5.7	3.5	4.9	26	70	1.85	X005a	
IXBF 9N160G		7	5	4.9	34	70	1.75	X024c	
IXBH 9N160G		9	5	4.9	34	70	1.25	X014a	
IXBF 40N160		28	16	6.2	130	40	0.5	X024c	X011c TO-268AA
IXBH 40N160		33	20	6.2	130	40	0.35	X014a	
IXBH 6N170	1700	12	6	2.84	17	600	1.65	X014a	
IXBT 6N170		12	6	2.84	17	600	1.65	X019	
IXBH 10N170		16	10	2.3	15	1200	1.25	X014a	X014a TO-247AD
IXBH 16N170A		16	10	4.7	15	50	0.83	X014a	
IXBT 10N170		16	10	2.3	15	1200	1.25	X019	
IXBT 16N170A		16	10	4.7	15	50	0.83	X019	
IXBN 42N170A		38	21	6	15	50	0.4	X027a	
IXBH 16N170		40	16	3.3	15	705	0.5	X014a	X015a PLUS247
IXBT 16N170		40	16	3.3	15	705	0.5	X019	
IXBH 42N170A		42	21	6	15	50	0.35	X014a	
IXBT 42N170A		42	21	6	15		0.35	X019	
IXBR 42N170		57	32	2.9		740	0.62	X016a	X016a ISOPLUS247™
IXBH 24N170		60	24	2.5	15	750	0.5	X014a	
IXBT 24N170		60	24	2.5	15	750	0.5	X019	
IXBN 75N170A		75	42	6			0.2	X027a	
IXBH 42N170		80	42	2.8	15	740	0.35	X014a	
IXBT 42N170		80	42	2.8	15	740	0.35	X019	X019 TO-268AA
IXBK 75N170A		110	65	6			0.12	X020a	
IXBX 75N170A		110	65	6			0.12	X015	
IXBN 75N170		145	75	3.1		440	0.2	X027a	
IXBK 75N170		200		3.1			0.12	X020a	X019a TO-268AA
IXBX 75N170		200		3.1			0.12	X015	
IXBH 2N250	2500	5		3.5	15	182	3.9	X014a	
IXBT 2N250		5		3.5	15	182	3.9	X019	
IXBX 25N250		55	25	3.3	103	510	0.42	X015	
IXCH 36N250		73	(36)	2.6	177	900	0.21	X014a	X020a TO-264
IXCK 36N250		73	(36)	2.6	177	900	0.21	X020a	
IXBL 64N250		116		3		170	0.25	X022e	
IXBK 64N250		156		3		170	0.17	X020a	
IXBX 64N250		156		3		170	0.17	X015	
IXBF 12N300	3000	26	(11)	2.8	62	530	1	X024c	X022e ISOPLUS264™
➢ IXBA 12N300HV		30	(12)	2.8	62	530	0.78	X011c	
IXBH 12N300		30	(12)	2.8	62	530	0.78	X014a	
IXBT 12N300		30	(12)	2.8	62	530	0.78	X019	
➢ IXBT 12N300HV		30	(12)	2.8	62	530	0.78	X019a	
IXBF 20N300		34	(14)	2.7	105	395	0.83	X024c	X024c ISOPLUS i4-PAC™
IXBF 32N300		40	22	2.8	142	630	0.78	X024c	
IXBH 20N300		50	(20)	2.7	105	395	0.5	X014a	
IXBT 20N300		50	(20)	2.7	105	395	0.5	X019	
➢ IXBT 20N300HV		50	(20)	2.7	105	395	0.5	X011c	
IXBF 42N300		60	(24)	2.5	200	490	0.52	X024c	X027a SOT-227B miniBLOC
IXBH 32N300		80	(32)	2.8	142	630	0.31	X014a	
IXBT 32N300		80	(32)	2.8	142	630	0.31	X019	
IXBF 55N300		86	(34)	2.7	335	260	0.35	X024c	
➢ IXBT 42N300HV		104	(42)	2.5	200	490	0.25	X011c	
IXBK 55N300		130	(55)	2.7	335	260	0.2	X020a	
IXBX 55N300		130	(55)	3.2	335	260	0.2	X015	

IGBT Modules – CBI Configuration

CBI

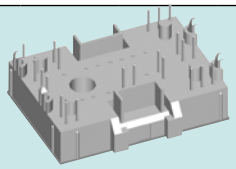

X110 MiniPack2

Outline drawings on pages O-30...O-55

See data sheet for pin arrangement

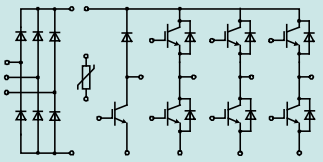

Type	Rectifier 3~			Inverter 3~					Brake chopper		
	V_{RRM}	I_{DAVM} T_H = 80°C	R_{thJC} typ.	V_{CES}	I_C T_C = 25°C	I_C T_C = 80°C	$V_{CE(sat)}$ typ.	R_{thJC} typ.	V_{CES}	I_C T_C = 80°C	R_{thJC} typ.
➢ New	V	A	K/W	V	A	A	V	K/W	V	A	K/W
600 V NPT IGBT											
MIAA 10WB600TMH	1600	62	2.1	600	18	13	2.1	1.8	600	13	1.8
MIAA 10WF600TMH	1600	62	2.1	600	18	13	2.1	1.8	no brake chopper included		
MIAA 15WB600TMH	1600	62	2.1	600	23	16	2.1	1.6	600	16	1.6
MIAA 20WB600TMH	1600	62	2.1	600	29	20	2.1	1.3	600	20	1.3
600 V Trench IGBT											
➢ **MITA 30WB600TMH**	1600	89	1.4	600	40	27	1.5	1.4	600	27	1.4
1200 V Trench IGBT											
MITA 10WB1200TMH	1600	61	2.1	1200	17	12	1.9	1.9	1200	12	1.9
MITA 15WB1200TMH	1600	62	2.1	1200	30	21	1.8	1.1	1200	21	1.1
MITB 10WB1200TMH	1600	61	2.1	1200	17	12	1.9	1.9	1200	12	1.9
MITB 15WB1200TMH	1600	61	2.1	1200	29	20	1.7	1.2	1200	20	1.2
1200 V XPT IGBT											
MIXA 10WB1200TMH	1600	69	1.8	1200	17	12	1.8	2.0	1200	12	2.0
MIXA 20WB1200TMH	1600	69	1.8	1200	28	20	1.8	1.26	1200	20	1.26

CBI

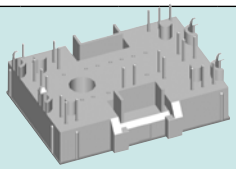

X110 MiniPack2

Outline drawings on pages O-30...O-55

See data sheet for pin arrangement

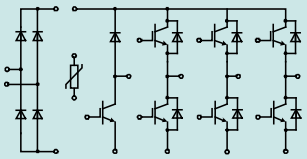

Type	Rectifier 1~			Inverter 3~					Brake chopper		
	V_{RRM}	I_{DAVM} T_H = 80°C	R_{thJC} typ.	V_{CES}	I_C T_C = 25°C	I_C T_C = 80°C	$V_{CE(sat)}$ typ.	R_{thJC} typ.	V_{CES}	I_C T_C = 80°C	R_{thJC} typ.
➢ New	V	A	K/W	V	A	A	V	K/W	V	A	K/W
600 V NPT IGBT											
MIAA 10WE600TMH	1600	23	2.1	600	18	13	2.1	1.8	600	13	1.8
MIAA 10WD600TMH	1600	23	2.1	600	18	13	2.1	1.8	no brake chopper included		
MIAA 15WE600TMH	1600	23	2.1	600	23	16	2.1	1.6	600	16	1.6
MIAA 15WD600TMH	1600	23	2.1	600	23	16	2.1	1.6	no brake chopper included		
MIAA 20WE600TMH	1600	23	2.1	600	29	20	2.1	1.3	600	20	1.3
MIAA 20WD600TMH	1600	23	2.1	600	29	20	2.1	1.3	no brake chopper included		

Mechanical mounting part

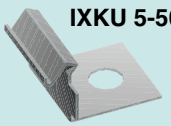

IXKU 5-505

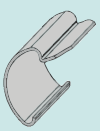

IXRB 5-506

IXKU 5-505	Screw clip
IXRB 5-506	Click clip

IGBT Modules – CBI Configuration

CBI 1

IGBT Modules

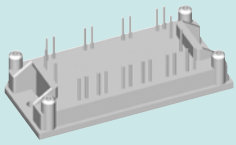

X111 E1-Pack

Outline drawings on pages O-30...O-55

See data sheet for pin arrangement

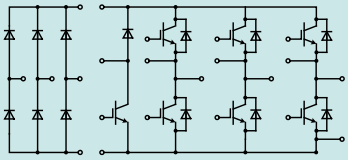

Type	Rectifier 3~			Inverter 3~					Brake chopper		
	V_{RRM}	I_{DAVM} T_C = 80°C	R_{thJC} typ.	V_{CES}	I_C T_C = 25°C	I_C T_C = 80°C	$V_{CE(sat)}$ typ.	R_{thJC} typ.	V_{CES}	I_C T_C = 80°C	R_{thJC} typ.
➢ New	V	A	K/W	V	A	A	V	K/W	V	A	K/W
600 V NPT IGBT											
MUBW 10-06A6K	1600	61	2.10	600	12	8	2.5	2.80	600	8	2.80
MUBW 15-06A6K		65	1.90		19	14	2.4	1.70		8	2.80
MUBW 20-06A6K		65	1.90		25	17	2.0	1.50		8	2.80
MUBW 25-06A6K		65	1.90		31	21	2.1	1.25		14	1.70
MUBW 35-06A6K		89	1.40		42	29	2.3	0.95		17	1.50
1200 V NPT IGBT											
MUBW 15-12A6K	1600	89	1.40	1200	19	13	3.0	1.35	1200	13	1.35
MUBW 30-12A6K		89	1.40		30	21	3.0	0.95		13	1.35
1200 V Trench IGBT											
MUBW 45-12T6K	1600	104	1.10	1200	43	31	2.5	0.80	1200	13	1.35
1200 V XPT IGBT											
➢ **MIXA 10WB1200TML**	1600	69	1.80	1200	17	12	1.8	2.00	1200	12	2.00
➢ **MIXA 20WB1200TML**		105	1.10		28	20	1.8	1.26		12	2.00

CBI 2

IGBT Modules

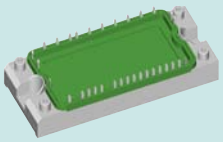

X112 E2-Pack

Outline drawings on pages O-30...O-55

See data sheet for pin arrangement

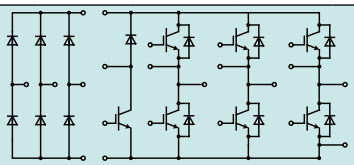

Type	Rectifier 3~			Inverter 3~					Brake chopper		
	V_{RRM}	I_{DAVM} T_C = 80°C	R_{thJC} typ.	V_{CES}	I_C T_C = 25°C	I_C T_C = 80°C	$V_{CE(sat)}$ typ.	R_{thJC} typ.	V_{CES}	I_C T_C = 80°C	R_{thJC} typ.
➢ New	V	A	K/W	V	A	A	V	K/W	V	A	K/W
600 V NPT IGBT											
MUBW 10-06A7	1600	18	1.5	600	20	15	1.9	1.5	600	15	1.5
MUBW 15-06A7		18	1.5		25	18	1.9	1.3		15	1.5
MUBW 20-06A7		24	1.3		35	25	1.9	1.0		18	1.4
MUBW 30-06A7		24	1.3		50	35	1.9	0.7		18	1.3
MUBW 50-06A7		29	1.1		75	50	1.9	0.5		25	1.0
600 V XPT IGBT											
➢ **MIXA 50WB600TED**	1200	119	1.2	600	64	43	1.6	0.8	600	20	1.26
1200 V NPT IGBT											
MUBW 10-12A7	1600	18	1.5	1200	20	15	2.3	1.2	1200	15	1.2
MUBW 15-12A7		24	1.3		35	25	2.0	0.7		15	1.2
MUBW 25-12A7		24	1.3		50	35	2.2	0.55		15	1.2
MUBW 35-12A7		29	1.1		50	35	2.5	0.55		25	0.7
1200 V Trench IGBT											
MUBW 15-12T7	1600	24	1.3	1200	25	15	1.7	1.2	1200	15	1.2
MUBW 25-12T7		24	1.3		40	25	1.7	0.8		15	1.2
MUBW 40-12T7		29	1.1		62	44	2.0	0.6		25	0.7
1200 V XPT IGBT											
➢ **MIXA 10WB1200TED**	1600	105	1.1	1200	17	12	1.8	2.0	1200	12	2.0
MIXA 20WB1200TED		105	1.1		28	20	1.8	1.26		12	2.0
➢ **MIXA 30WB1200TED**		105	1.1		43	30	1.8	0.84		12	2.0
MIXA 40WB1200TED		105	1.1		50	40	1.8	0.64		20	1.26

IGBT Modules – CBI Configuration

CBI 3

IGBT Modules

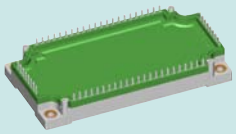

X113 E3-Pack

Outline drawings on pages O-30...O-55

See data sheet for pin arrangement

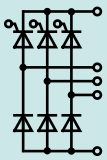

MIXA...WH...

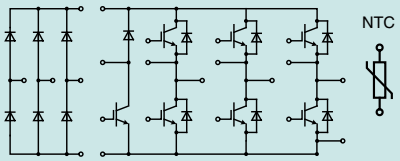

MIXA...WB..., MUBW...

Type	Rectifier 3~			Inverter 3~					Brake chopper			Layout
	V_{RRM}	I_{DAVM} $T_H = 80°C$	R_{thJC} typ.	V_{CES}	I_C $T_C = 25°C$	I_C $T_C = 80°C$	$V_{CE(sat)}$ typ.	R_{thJC} typ.	V_{CES}	I_C $T_C = 80°C$	R_{thJC} typ.	
➢ New	V	A	K/W	V	A	A	V	K/W	V	A	K/W	
600 V NPT IGBT												
MUBW 50-06A8	1600	40	1.10	600	75	50	1.9	0.50	600	25	1.00	A
MUBW 75-06A8		46	0.94		100	65	2.0	0.39		35	0.75	A
MUBW 100-06A8		60	0.73		125	85	1.9	0.30		50	0.55	A
1200 V NPT IGBT												
MUBW 35-12A8	1600	27	1.30	1200	50	35	2.5	0.55	1200	25	0.70	A
MUBW 50-12A8		46	0.94		85	60	2.2	0.35		35	0.55	A
1200 V Trench IGBT												
MUBW 50-12T8	1600	50	0.94	1200	75	50	1.7	0.45	1200	35	0.55	A
MUBW 75-12T8		50	0.94		105	75	1.7	0.35		35	0.55	A
1200 V XPT IGBT												
MIXA 60WB1200TEH	1600	190	0.65	1200	85	60	1.8	0.43	1200	40	0.64	A
➢ **MIXA 60WH1200TEH** [1]		135	0.65		85	60	1.8	0.43		40	0.64	C
MIXA 80WB1200TEH		265	0.50		120	84	1.8	0.32		40	0.64	A
➢ **MIXA 81WB1200TEH**		290	0.45		120	84	1.8	0.32		60	0.43	B
1700 V Trench IGBT												
MUBW 50-17T8	2200	120	1.10	1700	74	53	2.0	0.43	1700	34	0.62	A
MUBW 75-17T8		140	0.95		113	80	2.0	0.48		34	0.62	A

[1] **input rectifier half-controlled**

Layout A

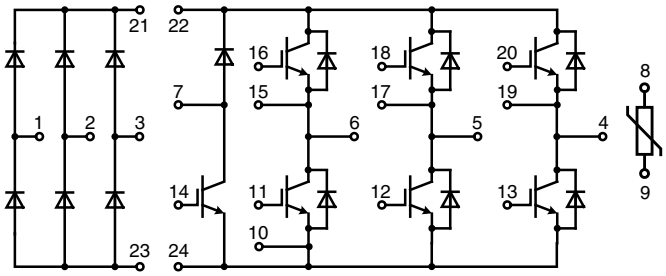

Layout B

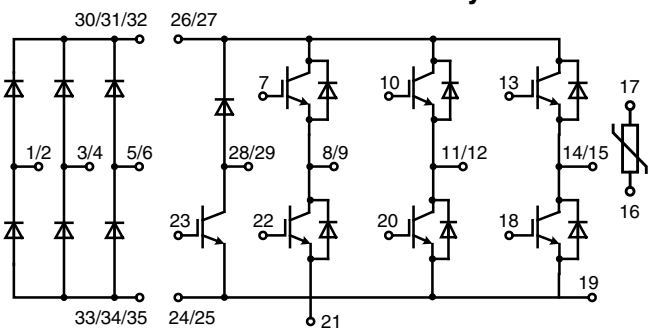

Layout C

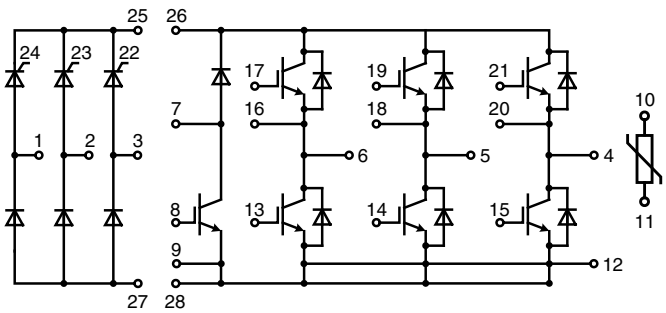

IGBT Modules – Six-Pack Configuration

Six-Pack

IGBT Modules

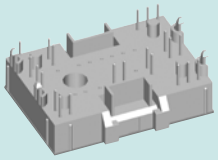

X110 MiniPack2

Outline drawings on pages O-30...O-55

See data sheet for pin arrangement

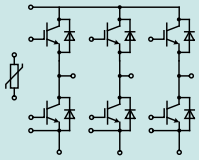

Type ➢ New	V_{CES} V	I_{C25} IGBT $T_C = 25°C$ A	I_{C80} IGBT $T_C = 80°C$ A	$V_{CE(sat)\ typ}$ IGBT $T_J = 25°C$ V	E_{off} IGBT $T_J = 125°C$ mJ	R_{thJC} IGBT K/W	I_{F25} Diode $T_C = 25°C$ A	I_{F80} Diode $T_C = 80°C$ A	NTC
1200 V XPT IGBT									
MIXA 10W1200TMH	1200	17	12	1.8	1.1	2.00	19	13	•
MIXA 20W1200TMH		28	20	1.8	1.7	1.26	33	22	•
MIXA 30W1200TMH		43	30	1.8	3.0	0.84	44	29	•
MIXA 40W1200TMH		60	40	1.8	4.1	0.64	44	29	•

Mechanical mounting part

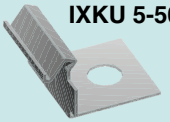

IXKU 5-505

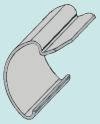

IXRB 5-506

IXKU 5-505	Screw clip
IXRB 5-506	Click clip

Six-Pack

IGBT Modules

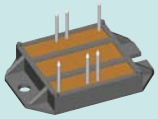

X102 ECO-PAC2

Outline drawings on pages O-30...O-55

See data sheet for pin arrangement

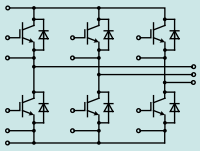

1200 V XPT IGBT									
MIXA 20W1200MC	1200	28	20	1.8	1.7	1.3	33	22	

Six-Pack

IGBT Modules

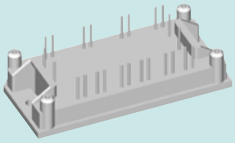

X111 E1-Pack

Outline drawings on pages O-30...O-55

See data sheet for pin arrangement

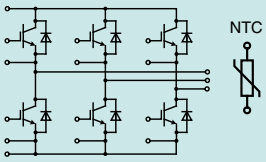

Type ➢ New	V_{CES} V	I_{C25} IGBT $T_C = 25°C$ A	I_{C80} IGBT $T_C = 80°C$ A	$V_{CE(sat)\ typ}$ IGBT $T_J = 25°C$ V	E_{off} IGBT $T_J = 125°C$ mJ	R_{thJC} IGBT K/W	I_{F25} Diode $T_C = 25°C$ A	I_{F80} Diode $T_C = 80°C$ A	NTC
1200 V NPT IGBT									
MWI 15-12A6K	1200	19	13	3.0	1.1	1.37	24	16	•
1200 V Trench IGBT									
MWI 45-12T6K	1200	43	31	1.9	3.4	0.80	49	32	•
MWI 60-12T6K		58	41	1.9	4.8	0.62	49	32	•
MWI 80-12T6K		80	56	2.0	6.5	0.46	80	51	•
1200 V XPT IGBT									
MIXA 10W1200TML	1200	17	12	1.8	1.1	2.00	19	13	•
MIXA 20W1200TML		28	20	1.8	1.7	1.26	33	22	•
MIXA 30W1200TML		43	30	1.8	3.0	0.84	44	29	•
MIXA 40W1200TML		60	40	1.8	4.1	0.64	44	29	•

IGBT Modules – Six-Pack configuration

Six-Pack

IGBT Modules

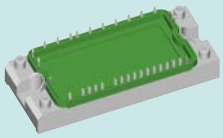

X112 E2-Pack

Outline drawings on pages O-30...O-55

See data sheet for pin arrangement

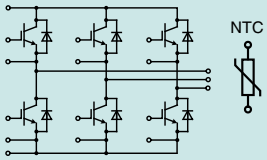

Type ➢ New	V_{CES} V	I_{C25} IGBT T_C = 25°C A	I_{C80} IGBT T_C = 80°C A	$V_{CE(sat)\ typ}$ IGBT T_J = 25°C V	E_{off} IGBT T_J = 125°C mJ	R_{thJC} IGBT K/W	I_{F25} Diode T_C = 25°C A	I_{F80} Diode T_C = 80°C A	NTC	Layout
600 V NPT IGBT										
MWI 30-06A7	600	45	30	1.9	1.0	0.88	36	24		A
MWI 30-06A7T		45	30	1.9	1.0	0.88	36	24	•	A
MWI 50-06A7		75	50	1.9	1.7	0.55	72	45		A
MWI 50-06A7T		75	50	1.9	1.7	0.55	72	45	•	A
MWI 75-06A7		90	60	2.1	2.5	0.44	140	85		A
MWI 75-06A7T		90	60	2.1	2.5	0.44	140	85	•	A
650 V XPT TRENCH IGBT										
➢ **MIXA 50W650TED**	650	*	50	1.5	1.2 (150°C)	*	*	*	•	B
➢ **MIXA 75W650TED**		*	75	1.5	1.7 (150°C)	*	*	*	•	B
1200 V NPT IGBT										
MWI 15-12A7	1200	30	20	1.0	1.8	0.88	25	17		A
MWI 25-12A7		50	35	2.2	2.8	0.55	50	33		A
MWI 25-12A7T		50	35	2.2	2.8	0.55	50	33	•	A
MWI 35-12A7		62	44	2.2	4.2	0.44	50	33		A
MWI 35-12A7T		62	44	2.2	4.2	0.44	50	33	•	A
MWI 50-12A7		85	60	2.2	5.6	0.35	110	70		A
MWI 50-12A7T		85	60	2.2	5.6	0.35	110	70	•	A
1200 V Trench IGBT										
MWI 35-12T7T	1200	60	35	1.7	4.1	0.62	50	33	•	B
MWI 50-12T7T		75	50	1.7	6.5	0.49	110	70	•	B
MWI 75-12T7T		105	75	1.7	9.5	0.35	150	100	•	B
1200 V XPT IGBT										
MIXA 30W1200TED	1200	43	30	1.8	3.0	0.84	44	29	•	B
MIXA 40W1200TED		60	40	1.8	4.1	0.64	44	29	•	B
MIXA 60W1200TED		85	60	1.8	5.5	0.43	88	59	•	B
➢ **MIXA 80W1200TED**		120	84	1.8	8.3	0.32	135	90	•	B

* in progress

Layout A (NTC option on some types)

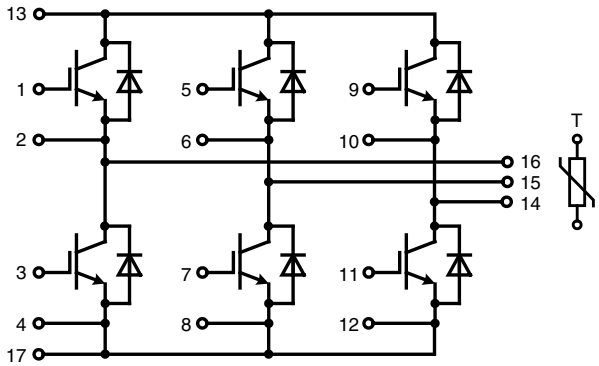

Layout B

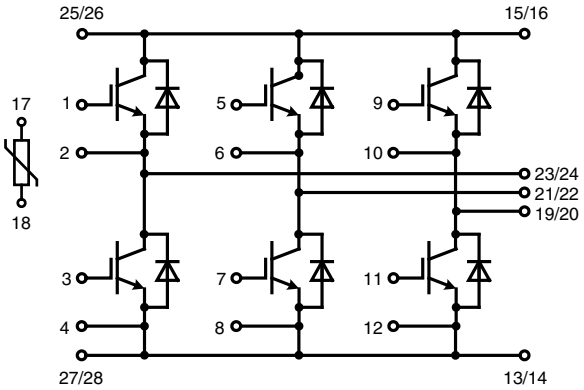

IGBT Modules – Six-Pack configuration

Six-Pack

IGBT Modules

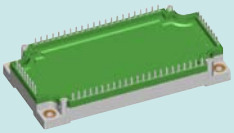

X113 E3-Pack

Outline drawings on pages O-30...O-55

See data sheet for pin arrangement

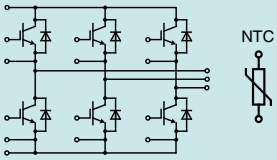

Type ➢ New	V_{CES} V	I_{C25} IGBT T_C = 25°C A	I_{C80} IGBT T_C = 80°C A	$V_{CE(sat)\ typ}$ IGBT T_J = 25°C V	E_{off} IGBT T_J = 125°C mJ	R_{thJC} IGBT K/W	I_{F25} Diode T_C = 25°C A	I_{F80} Diode T_C = 80°C A	NTC	Layout
600 V NPT IGBT										
MWI 100-06A8	600	130	88	2.0	2.9	0.30	140	88		A
MWI 100-06A8T		130	88	2.0	2.9	0.30	140	88	•	A
MWI 150-06A8		170	115	2.0	4.6	0.24	210	130		A
MWI 150-06A8T		170	115	2.0	4.6	0.24	210	130	•	A
MWI 200-06A8		215	155	2.0	6.3	0.18	260	165		A
MWI 200-06A8T		215	155	2.0	6.3	0.18	260	165	•	A
650 V XPT TRENCH IGBT										
➢ **MIXD 200W650TEH**	650	*	200	1.6	7.5 (150°C)	*	*	*	•	B
1200 V NPT IGBT										
MWI 75-12A8	1200	125	85	2.2	10.5	0.25	150	100		A
MWI 75-12A8T		125	85	2.2	10.5	0.25	150	100	•	A
MWI 100-12A8		160	110	2.2	14.6	0.19	200	130		A
MWI 100-12A8T		160	110	2.2	14.6	0.19	200	130	•	A
1200 V SPT+ IGBT										
MIEB 100W1200TEH		183	128	1.8	9.7	0.20	135	90	•	B
➢ **MIEB 100W1200DPFTEH**		183	128	1.8	9.7	0.20	135	90	•	B
MIEB 101W1200EH		183	128	1.8	9.7	0.20	135	90		A
➢ **MIEB 101W1200DPFEH**		183	128	1.8	9.7	0.20	135	90		A
1200 V Trench IGBT										
MWI 75-12T8T	1200	100	75	1.7	9.5	0.35	150	100	•	B
MWI 100-12T8T		140	100	1.7	12.0	0.26	200	130	•	B
MWI 150-12T8T		200	150	1.7	17.0	0.18	196	132	•	B
1200 V XPT IGBT										
➢ **MIXA 80W1200TEH**	1200	120	84	1.8	8.3	0.32	135	90	•	B
➢ **MIXA 100W1200TEH**		155	108	1.8	11.0	0.25	135	90	•	B
➢ **MIXA 150W1200TEH**		220	150	1.8	16.0	0.18	190	130	•	B
1700 V SPT+ IGBT										
MWI 100-17E8T	1700	145	100	2.3	24.9	0.25	tbd	100	•	B
MWI 150-17E8T		195	150	2.3	37.9	0.17	tbd	150	•	B

* in progress

Layout A (NTC option on some types)

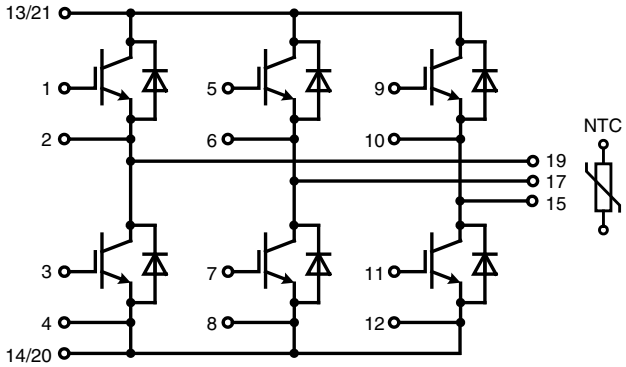

Layout B

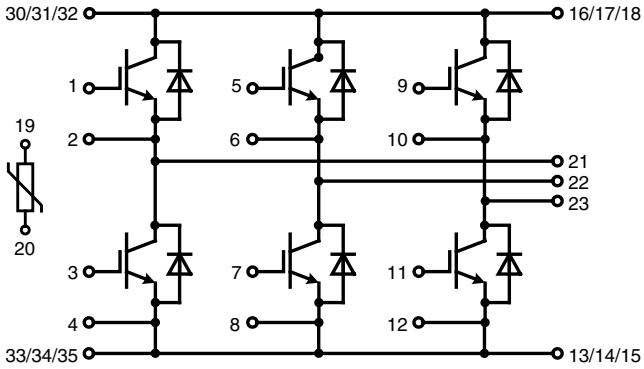

IGBT Modules in MiniPack2B package

MiniPack2B
with ***PressFIT Pins***

X109 MiniPack2B

Outline drawings on pages O-30...O-55

See data sheet for pin arrangement

Multi Level Configuration

...PM...

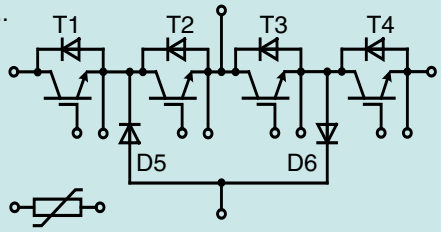

Type		IGBTs T1 &T4				IGBTs T2 & T3				Diodes D5 & D6			
	V_{RRM}	I_C T_C = 25°C	I_C T_C = 80°C	$V_{CE(sat)}$ typ.	R_{thJC} typ.	I_C T_C = 25°C	I_C T_C = 80°C	$V_{CE(sat)}$ typ.	R_{thJC} typ.	I_D T_C = 25°C	I_D T_C = 80°C	V_F typ.	R_{thJC} typ.
➢ New	V	A	A	V	K/W	A	A	V	K/W	A	A	V	K/W
➢ **MIXA 50PM650TMI**	650	75	50	1.6	0.8	75	50	1.6	0.8	55	40	1.8	1.2
➢ **MIXA 100PM650TMI**		150	100	1.6	0.35	150	100	1.6	0.35	130	100	1.8	0.6
➢ **MIXD 80PM650TMI**		108	82	1.5	0.55	147	110	1.5	0.40	114	83	1.7	0.6

CBI Configuration

...WB...

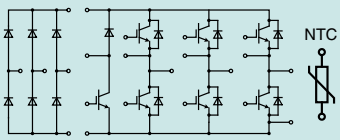

Type	Rectifier 3~			Inverter 3~					Brake chopper		
	V_{RRM}	I_{DAVM} T_C = 80°C	R_{thJC} typ.	V_{CES}	I_C T_C = 25°C	I_C T_C = 80°C	$V_{CE(sat)}$ typ.	R_{thJC} typ.	V_{CES}	I_C T_C = 80°C	R_{thJC} typ.
➢ New	V	A	K/W	V	A	A	V	K/W	V	A	K/W
➢ **MIXA 20WB1200TMI**	1600	105	1.5	1200	28	20	1.8	1.26	1200	12	2.0
➢ **MIXA 30WB1200TMI**	1600	105	1.1	1200	43	30	1.8	0.84	1200	20	1.26

Six-Pack Configuration

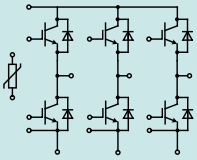

Type	V_{CES}	I_{C25} IGBT T_C = 25°C A	I_{C80} IGBT T_C = 80°C A	$V_{CE(sat)\ typ}$ IGBT T_J = 25°C V	E_{off} IGBT T_J = 125°C mJ	R_{thJC} IGBT	I_{F25} Diode T_C = 25°C A	I_{F80} Diode T_C = 80°C A	NTC
➢ New	V					K/W			
➢ **MIXA 40W1200TMI**	1200	60	40	1.8	4.1	0.64	44	29	•
➢ **MIXA 60W1200TMI**	1200	85	60	1.8	5.5	0.43	88	59	•

IGBT XPT Modules in SimBus F package

- space savings
- reduced protection circuits
- package designed for wave soldering

Package style
Outline drawings
on pages
O-30...O-55

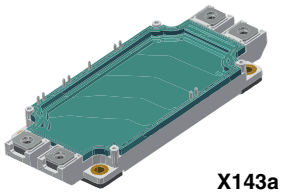

X143a

➢ Type ✧ New under development	V_{CES} V	I_{C80} IGBT T_C = 80°C A	$V_{CE(sat)\ typ}$ IGBT T_J = 25°C V	E_{on} IGBT T_J = 125°C mJ	E_{off} IGBT T_J = 125°C mJ	R_{thJC} IGBT K/W	I_{F80} Diode T_C = 80°C A	R_{thJC} Diode K/W	Fig. No.
Phase-Leg									
➢ **MIXA 600PF650TSF**	650	490	1.65	6	23	0.085	340	0.095	X143a
➢ **MIXA 225PF1200TSF**	1200	250	1.80	20	27	0.115	185	0.145	
➢ **MIXA 300PF1200TSF**		325	1.80	20	42	0.085	185	0.145	
➢ **MIXA 450PF1200TSF**		450	1.80	22	68	0.060	265	0.095	
✧ **MIXA 600PF1200TSF**		600	1.80	*	*	*	*	*	
1700 V XPT IGBT									
✧ **MIXA 225PF1700TSF**	1700	355	250	*	*	*	*	•	
✧ **MIXA 300PF1700TSF**		425	300	*	*	*	*	•	
✧ **MIXA 450PF1700TSF**		635	450	*	*	*	*	•	
Brake / Boost									
➢ **MIXA 225RF1200TSF**	1200	250	1.80	20	27	0.115	185	0.145	
Common Emitter									
➢ **MIXA 600AF650TSF**	650	490	1.65	6	23	0.085	340	0.095	
Common Collector									
➢ **MIXA 600CF650TSF**	650	490	1.65	6	23	0.085	340	0.095	
Multi Level (one half)									
➢ **MIXA 430LD1200TSF** [1]	1200	430	1.80	34	44	0.064	265	0.110	
	650	345	1.65	6.5	15	0.100	200	0.145	

* in progress [1] two MIXA 430DL1200TSF build a T-type (NPC2 type) multi level circuit

...PF...
phase-leg

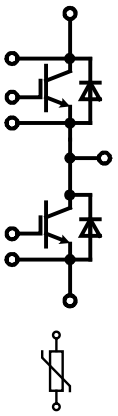

...RF...
brake / boost

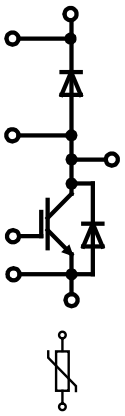

...AF...
common emitter

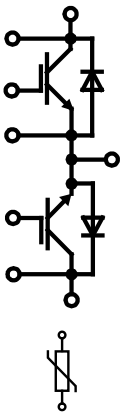

...CF...
common collector

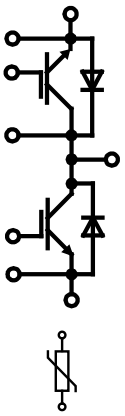

...LD...
multi level (one half)

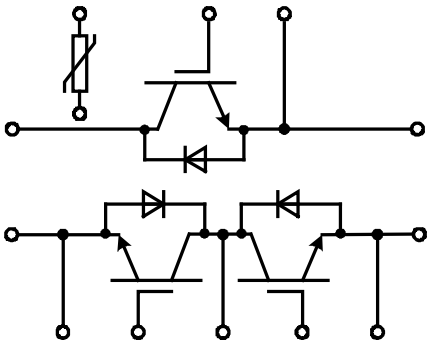

IGBT Six-Pack and High Power Half Bridge Configuration

Six-Pack

IGBT Modules

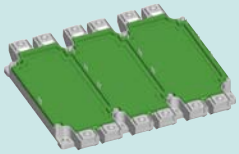

X114 E9-Pack

Outline drawings on pages O-30...O-55

See data sheet for pin arrangement

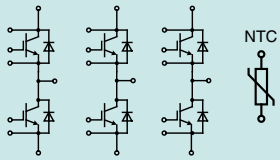

Type ✧ under development ➢ New	V_{CES} V	I_{C25} IGBT T_C = 25°C A	I_{C80} IGBT T_C = 80°C A	$V_{CE(sat)\ typ}$ IGBT T_J = 25°C V	E_{off} IGBT T_J = 125°C mJ	R_{thJC} IGBT K/W	I_{F80} Diode T_C = 80°C A	NTC
1200 V XPT IGBT								
MIXA 225W1200TFH	1200	360	250	1.8	27	0.115	185	•
MIXA 300W1200TFH		465	325	1.8	42	0.085	185	•
MIXA 450W1200TFH		650	450	1.8	68	0.060	265	•
✧ **MIXA 600W1200TFH**		860	600	1.8	*	*	*	•
1200 V SPT+ IGBT								
➢ **MIEB 300W1200TFH**	1200	530	375	1.8	30	0.07	260	•
➢ **MIEB 450W1200TFH**		*	*	*	*	*	*	•
1700 V Trench IGBT								
MWI 450-17T9	1700	600	425	2.1	150	0.057	225	•
1700 V XPT IGBT								
✧ **MIXA 225W1700TFH**	1700	355	250	*	*	*	*	•
✧ **MIXA 300W1700TFH**		425	300	*	*	*	*	•
✧ **MIXA 450W1700TFH**		635	450	*	*	*	*	•

* in progress

XPT Half Bridge High Power Module in SimBus P package

X144

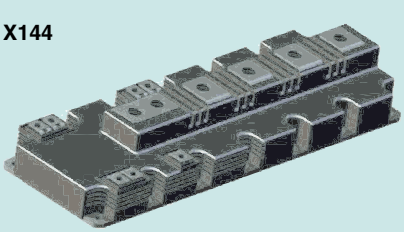

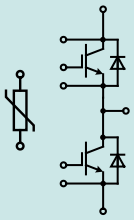

- XPT IGBT and SONIC freewheeling diode
- 175°C max junction temperature
- Ultrasonic welded internal connections
- Copper base plate
- High reliability by optimized DCB substrates

Package style

Outline drawings on pages O-30...O-55

Type ✧ under development	V_{CES} V	I_{C25} IGBT T_C = 25°C A	I_{C80} IGBT T_C = 80°C A	$V_{CE(sat)\ typ}$ IGBT T_J = 25°C V	E_{off} IGBT T_J = 125°C mJ	R_{thJC} IGBT K/W	I_{F25} Diode T_C = 25°C A	I_{F80} Diode T_C = 80°C A	Fig. No.
✧ **MIXA 1400PF1200TSP**	1200	2100	1400	1.95	220	0.02	1650	1200	X144
✧ **MIXA 1400PF1700TSP**	1700	*	1400	*	*	*	*	*	

* in progress

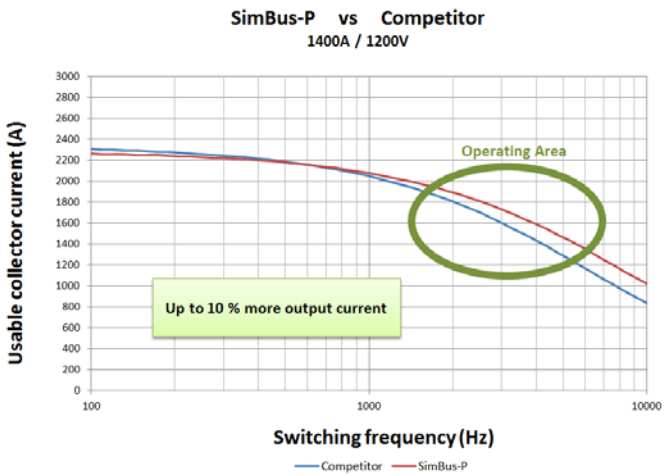

Full Bridge

IGBT Modules

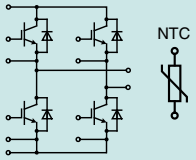

Type ➢ New	Technology	V_{CES} V	I_{C25} IGBT T_C = 25°C A	I_{C80} IGBT T_C = 80°C A	$V_{CE(sat)\ typ}$ IGBT T_J = 25°C V	E_{off} IGBT T_J = 125°C mJ	I_{F80} Diode T_C = 80°C A	NTC	Fig. No.
MKI 80-06T6K	Trench	600	89	67	1.8	2.8	67	•	X111
MKI 50-06A7	NPT	600	72	50	1.9	1.7	45		X112
MKI 50-06A7T			72	50	1.9	1.7	45	•	
MKI 65-06A7T			100	67	2.0	2.3	85	•	
MKI 75-06A7			90	60	2.5	6.3	85		
MKI 75-06A7T			90	60	2.5	6.3	85	•	
MKI 50-12F7	Fast NPT	1200	65	45	3.2	2.5	70		
MKI 100-12F8			65	45	3.2	2.5	70		X113
➢ **MIXA 61H1200ED**	XPT		85	60	1.8	5.5	59		X112
➢ **MIXA 81H1200EH**			120	84	1.8	8.3	90		X113
➢ **MIEB 76H1200EH**	SPT+	1200	128	90	2.3	7.0	90		
➢ **MIEB 101H1200EH**			183	128	1.8	9.7	90		

SOLAR Inverter Modules

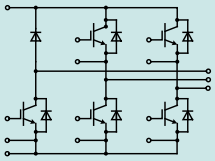

NPT IGBT
Full Bridge & Boost Stage

Type ➢ New	Technology	V_{CES} V	I_{C25} IGBT T_C = 25°C A	I_{C80} IGBT T_C = 80°C A	$V_{CE(sat)\ typ}$ IGBT T_J = 25°C V	E_{off} IGBT T_J = 125°C mJ	I_{F80} Diode T_C = 80°C A	NTC	Fig. No.
➢ **MWI 30-06A7 - S**	NPT	600	45	30	1.9	1.0	24		X112
➢ **MWI 50-06A7 - S**			72	50	1.9	1.7	45		

Fast XPT IGBT
Full Bridge & Boost Stage & Bypass Diode

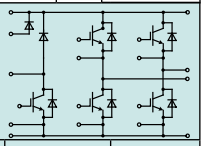

Type ➢ New	Technology	V_{CES} V	I_{C25} IGBT T_C = 25°C A	I_{C80} IGBT T_C = 80°C A	$V_{CE(sat)\ typ}$ IGBT T_J = 25°C V	E_{on} IGBT T_J = 150°C mJ	E_{off} IGBT T_J = 150°C mJ	I_{F80} Diode T_C = 80°C A	Fig. No.
➢ **MIXB 52HR600ED**	fast XPT & SONIC	600	78	52	1.8	1.38	0.8	29	X112
➢ **MIXB 52HR600DCGED**	fast XPT & SiC		78	52	1.8	0.67	0.8	20	

Outline drawings on
pages O-30...O-55

X102 ECO-PAC2

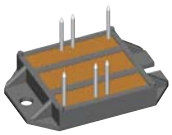

X111 E1-Pack

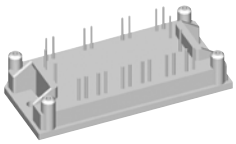

X112 E2-Pack

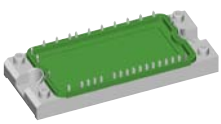

X113 E3-Pack

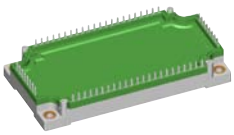

NPT

IGBT Modules

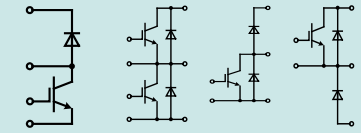

Type ➢ New	V_{CES} V	I_{C25} IGBT T_C = 25°C A	I_{C80} IGBT T_C = 80°C A	$V_{CE(sat)}$ typ IGBT T_J = 25°C V	E_{off} IGBT T_J = 125°C mJ	R_{thJC} IGBT K/W	I_{F25} Diode T_C = 25°C A	I_{F80} Diode T_C = 80°C A	Fig. No.	Package Style Outline drawings on pages O-30...O-55
1200 V Half Bridge, NPT										
MII 75-12A3	1200	90	60	2.2	5.6	0.33	100	60	X127a	X127a/b/c
MII 100-12A3		135	90	2.2	10.5	0.22	150	100		
MII 145-12A3		160	110	2.2	15.0	0.18	150	100		
MII 150-12A4		180	120	2.2	11.5	0.17	200	130	X128a	
MII 200-12A4		270	180	2.2	21.0	0.11	300	200		
MII 300-12A4		330	220	2.2	29.0	0.09	450	270		
1200 V Boost Chopper, NPT										
MID 75-12A3	1200	90	60	2.2	5.6	0.33	100	60	X127b	X128a/b/c
MID 100-12A3	1200	135	90	2.2	10.5	0.22	150	100		
MID 145-12A3		160	110	2.2	15.0	0.18	150	100		
MID 150-12A4		180	120	2.2	11.5	0.17	200	130	X128b	
MID 200-12A4		270	180	2.2	21.0	0.11	300	200		
MID 300-12A4		330	220	2.2	29.0	0.09	450	270		
MID 550-12A4		670	460	2.3	59.0	0.05	750	460		
1200 V XPT IGBT Brake / Boost Chopper										
➢ **MIXA 80R1200VA**	1200	120	84	1.9	8.3	0.32	135	90	X103	X130a/b/c
➢ **MIXA 150R1200VA**		220	150	1.8	16	0.18	190	130		
1200 V Buck Chopper, NPT										
MDI 75-12A3	1200	90	60	2.2	5.6	0.33	100	60	X127c	
MDI 100-12A3		135	90	2.2	10.5	0.22	150	100		
MDI 145-12A3		160	110	2.2	15.0	0.18	150	100		
MDI 150-12A4		180	120	2.2	11.5	0.17	200	130	X128c	
MDI 200-12A4		270	180	2.2	21.0	0.11	300	200		
MDI 300-12A4		330	220	2.2	29.0	0.09	450	270		X103 V1-Pack
MDI 550-12A4		670	460	2.3	59.0	0.05	750	460		
1200 V XPT IGBT Buck Chopper										
➢ **MIXA 150Q1200VA**	1200	220	150	1.8	16	0.18	190	130	X103	
1200 V XPT IGBT Buck / Boost switched reluctance Chopper										
➢ **MIXA 60HU1200VA**	1200	85	60	1.8	5.5	0.43	88	59	X103	

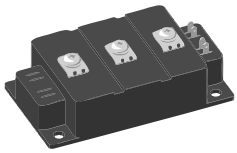

Power MOSFETs and MOSFET Modules

The Metal Oxide Semiconductor Field Effect Transistor (MOSFET) is a transistor that is used for high frequency switching control of power electronic systems. IXYS offer various MOSFET technology based on the customer requirement for voltage, switching frequency. A table giving a diagrammatic representation of our basic MOSFET offerings is given below.

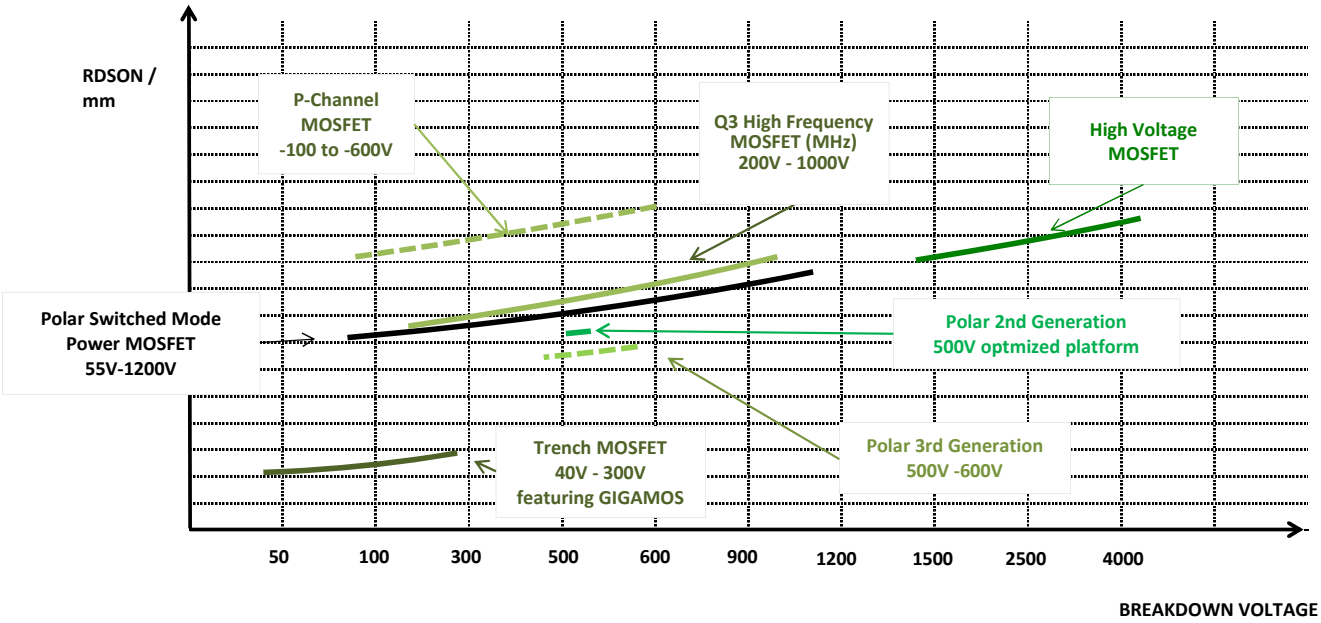

Trench and Trench2 Power MOSFETs

IXYS Trench Power MOSFETs are ideally suited for low-voltage, high-current applications. These MOSFETs feature an exceptionally low $R_{DS(on)}$, thus guaranteeing low power dissipation. Trench HiPerFET™ versions feature all of the advantages presented by IXYS' Trench Standard Power MOSFETs with an added benefit of a fast intrinsic rectifier which provides low reverse recovery charge (Q_{rr}) and excellent commutating dV/dt ratings for enhanced power switching capabilities and device ruggedness.

Polar™ Power MOSFETs

Polar™ MOSFETs (IXT..) feature a proprietary cell design and process that has resulted in a MOSFET with a 30% reduction in $R_{DS(on)}$ per unit area along with a decrease in gate charge. IXYS has also reduced the wafer thickness, which substantially reduces the thermal resistance. The combination of lower $R_{DS(on)}$, lower gate charge Q_g and higher power dissipation capability has resulted in a new class of MOSFETs, which will increase the cost effectiveness in switch mode power supply (SMPS) applications.
IXYS' Polar™ HiPerFETs (IXF..) combine the strengths of the Polar Standard product family with a faster body diode, whose reverse recovery time (trr) is reduced to make them suitable for phase-shift bridges, motor control and uninterruptible power supply applications (UPS). This family of HiPerFETs provide lowest $R_{DS(on)}$, low R_{thJC}, low Q_g, and enhanced DV/DT capability.

PolarP2™ Power MOSFETs

PolarP2™ devices are an optimized range of the standard Polar platform for 500V device rating.

PolarP3™ HiPerFET Power MOSFETs

The PolarP3™ HiPerFET product family is the latest addition to IXYS' benchmark high-performance Polar-Series product line for our product portfolio between 500V and 600V. Its high Figure of Merit (FOM) being the multiplication of Q_g and in $R_{DS(on)}$ provide an excellent alternative to weaker super junction technologies. All IXYS Polar MOSFETs are tested 100% for avalanche energy providing the industries standard for reliability and ruggedness.

Extended FBSOA Linear Power MOSFETs

IXYS' Extended FBSOA Linear Power MOSFETs are a class of rugged Power MOSFETs tailored specifically for applications that require Power MOSFETs to operate in their current saturation region. These new devices feature low static drain to source on-resistances and provide unparalleled performance and reliability in controlled current output applications. Typical applications that stand to benefit from this new class of extended FBSOA power MOSFETs include circuit breakers, current sources, programmable loads, power controllers, power regulators, motor control, power amplifiers and soft start applications. In the linear mode, a power MOSFET is subjected to high thermo-electrical stress caused by the simultaneous occurrence of high drain voltage and current resulting in high power dissipation. IXYS has optimized the internal structure of these MOSFETs achieving an extended "forward bias safe operating area" (FBSOA) capability to overcome the limitations posed by conventional power MOSFETs operating in current saturation region. These extended FBSOA Power MOSFETs are not intended for high speed switching applications.

Depletion-Mode MOSFET

Depletion-Mode Power MOSFETs operate in a 'normally-on' mode, not requiring energy or gate voltage for turn on. Unlike the regular enhancement type MOSFETs these Depletion-Mode MOSFETs require a negative gate bias to turn off. Consequently they remain on at or above zero gate bias voltage but otherwise have similar MOSFET characteristics. The "normally-on" operational mode of these devices combined with an enhanced linear operating capability allows for an ideal device selection in current sources, current regulators, solid-state relays, level shifting, active loads, start-up circuits, and active power filters. Since these devices require no energy or gate voltage for turn-on, high energy efficiency can be achieved through device implementation in zero power "normally on" load switch applications. With the high degree of current regulation, these devices can also act as active inductors with high dynamic impedance in power filter applications to limit voltage and current noise and spikes. Furthermore these devices can provide active circuit protection to limit the surge of current during short-circuit or overload conditions.

PolarP™ P-Channel Power MOSFETs

IXYS' Polar technology platform employed in our PolarP™ P-Channel MOSFETs utilizes a proprietary cell design that improves overall device efficiency and performance. This technology platform reduces on-state resistance by as much as 30% and gate charge by 40% compared to legacy counterparts. With such low onstate resistances, these devices offer low conduction and switching losses while a low input capacitance. The combination of low $R_{DS(on)}$ and gate charge allow for improved energy efficiency. These P-Channel MOSFETs are dynamic dV/dt and avalanche rated making them extremely rugged in demanding operating environments and can easily be paralleled due to an on-state resistance with a positive temperature coefficient. They are ideal for 'high side' switching where a simple drive circuit referenced to ground can be used, circumventing additional 'high side' driver circuitry commonly involved when using an N-Channel MOSFET. This will help designers to reduce component count and improve reliability. Furthermore it allows for the design of a complementary power output stage, with a corresponding IXYS N-Channel MOSFET, for a power half bridge stage with a simple drive circuit.

TrenchP™ P-Channel Power MOSFETs

This family of P-Channel devices benefit from technological advances derived from IXYS' robust Trench cell design commonly implemented in their wide portfolio of industry recognized power devices. They feature an ultra low $R_{DS(on)}$, minimizing conduction losses, and promoting improved operating and thermal efficiencies. These TrenchP™ P-Channel MOSFETs are suitable for 'high side' switching where a simple drive circuit referenced to ground can be employed, circumventing additional 'high side' driver circuitry commonly involved when using an N-Channel MOSFET. This enables designers to reduce component count, thereby improving drive circuit simplicity and cost structure. Furthermore it allows for the design of a complementary power output stage, with a corresponding IXYS N-Channel MOSFET, for a power half bridge stage with a simple drive circuit. Common applications that will greatly benefit from these devices include high side switching, high current regulators, DC Choppers, CMOS high power amplifiers, push-pull amplifiers, and power solid state relays.

Q3-Class HiPerFET™ MOSFETs

Q3-Class HiPerFET™ MOSFETs (Identified by the suffix letter Q3) is the direct result of a revolutionary new chip design, which decreases the MOSFETs total gate charge (Q_g) and the Miller capacitance (C_{rss}), while maintaining the ruggedness and fast switching intrinsic diode of the company's current HiPerFET™ product line. The result is a MOSFET with dramatically improved switching efficiencies and thus enabling higher frequency operation and smaller power supplies.

Very High Voltage Power MOSFETs

IXYS' VHV N-Channel Power MOSFETs are specifically designed to address demanding, fast-switching applications requiring blocking capabilities of 2.5kV to 4.5kV. These VHV Power MOSFETs are also ideally suited for parallel operation due to the positive temperature coefficient of their on-state resistance. Parallel operation with these devices provides a more cost-effective solution than employing series-connected, lower-voltage MOSFETs. The reduction or replacement of multiple series-connected devices and the associated gate drive circuitry commonly involved, simplifies design, improves reliability, and reduces over-all system cost. These VHV MOSFETs represent an optimal solution in applications such as laser and x-ray generation systems, high-voltage power supplies, pulse circuits, high voltage automated test equipment, and capacitor discharge circuits. 4.5kV device offerings feature high isolation capability with superior thermal performance.

Trench Power MOSFETs

Part Type ➢ New	V_{DSS} V	$I_{D(cont)}$ Chip T_C = 25°C A	$R_{DS(on)}$ T_J = 25°C Ω	C_{iss} typ. ns	Q_g typ. ns	t_{rr} typ. ns	R_{thJC} K/W	P_D W	Fig. No.	Package style Outline drawings on pages O-30...O-55
IXTC 110N055T	55	78	0.009	3080	67	70	1.50	100	X010a	X003 **TO-251AA**
IXTA 110N055T7		110	0.007	3080	67	70	0.65	230	X012b	
IXTF 280N055T		160	0.004	9800	200	40	0.75	200	X024d	
IXTU 12N06T	60	12	0.085	256	3.4	30	4.50	33	X003	X004 **TO-252AA**
IXTY 12N06T		12	0.085	256	3.4	30	4.50	33	X004	
IXTP 98N075T	75	98	0.01	3100	80	100	0.75	200	X005a	
IXTA 88N085T	85	88	0.011	3140	69	90	0.65	230	X011b	
IXTC 230N085T		120	0.0053	9900	187	90	0.96	160	X010a	X005a **TO-220AB**
IXTP 60N10TM	100	33	0.019	2650	49	59	2.50	60	X007a	
IXTP 44N10T		44	0.03	1567	27.4	60	1.15	130	X005a	
IXTY 44N10T		44	0.03	1567	27.4	60	1.15	130	X004	
IXTP 60N10T		60	0.018	2650	49	59	0.85	176	X005a	X007a **TO-220ABFP**
IXTA 60N10T		60	0.018	2650	49	59	0.85	176	X011b	
IXTQ 60N10T		60	0.018	2650	49	59	0.85	176	X017a	
IXTP 80N10T		80	0.014	3040	60	100	0.65	230	X005a	X009a **PLUS220™**
IXTA 80N10T		80	0.014	3040	60	100	0.65	230	X011b	
IXTA 80N10T7		80	0.014	3040	60	100	0.65	230	X012b	
IXTC 160N10T		83	0.0075	6600	132	60	1.06	140	X010a	
IXTF 200N10T		90	0.007	9400	152	76	0.96	156	X024d	X010a **ISOPLUS220™**
IXTC 180N10T		90	0.007	6900	151	100	1.00	150	X010a	
IXTL 2x180N10T		100	0.0074	6900	151	60	1.00	150	X022c	
IXTC 200N10T		101	0.0063	9400	152	76	0.96	160	X010a	
IXTP 130N10T		130	0.0091	5080	104	67	0.42	360	X005a	X011b **TO-263AB**
IXTH 130N10T		130	0.0091	5080	104	67	0.42	360	X014a	
IXTA 130N10T		130	0.0091	5080	104	67	0.42	360	X011b	
IXTA 130N10T7		130	0.0091	5080	104	67	0.42	360	X012b	X012b **TO-263AB**
IXTQ 130N10T		130	0.0091	5080	104	67	0.42	360	X017a	
IXTP 160N10T		160	0.007	6600	132	60	0.35	430	X005a	
IXTH 160N10T		160	0.007	6600	132	100	0.35	430	X014a	
IXTA 160N10T		160	0.007	6600	132	60	0.35	430	X011b	X014a **TO-247AD**
IXTA 160N10T7		160	0.007	6600	132	100	0.35	430	X012b	
IXTQ 160N10T		160	0.007	6600	132	100	0.35	430	X017a	
IXTP 180N10T		180	0.0064	6900	151	72	0.31	480	X005a	
IXTH 180N10T		180	0.0064	6900	151	100	0.31	480	X014a	X017a **TO-3P**
IXTA 180N10T		180	0.0064	6900	151	72	0.31	480	X011b	
IXTA 180N10T7		180	0.0064	6900	151	100	0.31	480	X012b	
IXTQ 180N10T		180	0.0064	6900	151	100	0.31	480	X017a	
IXTV 200N10T		200	0.0055	9400	152	76	0.27	550	X009a	X022c **ISOPLUS264™**
IXTN 200N10T		200	0.0055	9400	152	76	0.30	550	X027a	
IXTH 200N10T		200	0.0055	9400	152	76	0.27	550	X014a	
IXTQ 200N10T		200	0.0055	9400	152	76	0.27	550	X017a	
IXTN 320N10T		320	0.0032	22600	375	100	0.22	680	X027a	X024d **ISOPLUS i4-PAC™**
IXTP 42N15T	150	42	0.45	1880	21	100	0.75	200	X005a	
IXTA 42N15T		42	0.045	1880	21	100	0.75	200	X011b	
IXTP 56N15T		56	0.036	2250	34	100	0.50	300	X005a	
IXTA 56N15T		56	0.036	2250	34	100	0.50	300	X011b	X027a **see next page**

Trench Power MOSFETs

Part Type ➢ New	V_{DSS} V	$I_{D(cont)}$ Chip T_C = 25°C A	$R_{DS(on)}$ T_J = 25°C Ω	C_{iss} typ. ns	Q_g typ. ns	t_{rr} typ. ns	R_{thJC} K/W	P_D W	Fig. No.	Package style Outline drawings on pages O-30...O-55
IXTP 102N15T	150	102	0.018	5220	87	97	0.33	455	X005a	X005a **TO-220AB**
IXTH 102N15T		102	0.018	5220	87	97	0.33	455	X014a	
IXTA 102N15T		102	0.018	5220	87	97	0.33	455	X011b	
IXTQ 102N15T		102	0.018	5220	87	97	0.33	455	X017a	
IXTH 130N15T		130	0.012	9800	113	100	0.20	750	X014a	
IXTQ 130N15T		130	0.012	9800	113	100	0.20	750	X017a	
IXTH 160N15T		160	0.0096	8800	160	115	0.18	830	X014a	
IXTP 32N20T	200	32	0.078	1760	38	110	0.75	200	X005a	X009a **PLUS220™**
IXTA 32N20T		32	0.078	1760	38	110	0.75	200	X011b	
IXTP 48N20T		48	0.05	3090	60	130	0.50	250	X005a	
IXTA 48N20T		48	0.05	3090	60	130	0.50	250	X011b	
IXTQ 48N20T		48	0.05	3090	60	130	0.50	250	X017a	
IXTP 60N20T		60	0.04	4530	73	118	0.30	500	X005a	
IXTA 60N20T		60	0.04	4530	73	118	0.30	500	X011b	X010a **ISOPLUS220™**
IXTQ 60N20T		60	0.04	4530	73	118	0.30	500	X017a	
IXTP 86N20T		86	0.029	4500	90	140	0.31	480	X005a	
IXTA 86N20T		86	0.029	4500	90	140	0.31	480	X011b	
IXTQ 86N20T		86	0.029	4500	90	140	0.31	480	X017a	
IXTV 102N20T		102	0.023	6800	114	130	0.20	750	X009a	
IXTH 102N20T		102	0.023	6800	114	130	0.20	750	X014a	X011b **TO-263AB**
IXTQ 102N20T		102	0.023	6800	114	130	0.20	750	X017a	
IXTH 130N20T		130	0.016	8800	150	150	0.18	830	X014a	
IXTC 96N25T	250	40	0.031	6100	114	158	0.85	147	X010a	
IXTC 110N25T		50	0.027	9400	157	170	0.69	180	X010a	
IXTP 50N25T		50	0.06	4000	78	166	0.31	400	X005a	
IXTH 50N25T		50	0.06	4000	78	166	0.31	400	X014a	X014a **TO-247AD**
IXTA 50N25T		50	0.06	4000	78	166	0.31	400	X011b	
IXTQ 50N25T		50	0.06	4000	78	166	0.31	400	X017a	
IXTP 76N25T		76	0.039	4920	92	148	0.27	460	X005a	
IXTH 76N25T		76	0.039	4920	92	148	0.27	460	X014a	
IXTA 76N25T		76	0.039	4920	92	148	0.27	460	X011b	
IXTQ 76N25T		76	0.039	4920	92	148	0.27	460	X017a	X017a **TO-3P**
IXTV 86N25T		86	0.037	5330	105	156	0.23	540	X009a	
IXTH 86N25T		86	0.037	5330	105	156	0.23	540	X014a	
IXTQ 86N25T		86	0.037	5330	105	156	0.23	540	X017a	
IXTV 96N25T		96	0.029	6100	114	158	0.20	625	X009a	
IXTH 96N25T		96	0.029	6100	114	158	0.20	625	X014a	
IXTQ 96N25T		96	0.029	6100	114	158	0.20	625	X017a	X027a **SOT-227B miniBLOC**
IXTH 110N25T		110	0.024	9400	157	170	0.18	694	X014a	

Trench HiPerFETs with Fast Intrinsic Diode

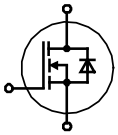

Part Type	V_{DSS} V	$I_{D(cont)}$ Chip $T_C = 25°C$ A	$R_{DS(on)}$ $T_C = 25°C$ Ω	C_{iss} typ. pF	Q_g typ. nC	t_{rr} max. *typ. ns	R_{thJC} K/W	P_D W	Fig. No.
IXFA 130N10T	100	130	0.0091	5080	104	67	0.42	360	X011b
IXFP 130N10T		130	0.0091	5080	104	67	0.42	360	X005a
IXFH 230N10T		230	0.0047	15300	250	*82	0.23	650	X014a
IXFX 360N10T		360	0.0029	33000	525	130	0.12	1250	X015a
IXFN 360N10T		360	0.0026	33000	525	130	0.18	830	X027a
IXFK 360N10T		360	0.0029	33000	525	130	0.12	1250	X020a
IXFX 420N10T		420	0.0026	47000	670	140	0.09	1670	X015a
IXFN 420N10T		420	0.0023	47000	670	140	0.14	1070	X027a
IXFK 420N10T		420	0.0026	47000	670	140	0.09	1670	X020a
IXFA 102N15T	150	102	0.018	5220	87	120	0.33	455	X011b
IXFH 102N15T		102	0.018	5220	87	120	0.33	455	X014a
IXFP 102N15T		102	0.018	5220	87	120	0.33	455	X005a
IXFH 160N15T		160	0.0096	8800	160	90	0.18	830	X014a
IXFH 150N20T	200	150	0.015	11700	177	*100	0.14	890	X014a
IXFT 150N20T		150	0.015	11700	177	*100	0.14	890	X019
IXFR 230N20T		156	0.008	28000	378	200	0.25	600	X016a
IXFX 170N20T		170	0.011	19600	265	200	0.13	1150	X015a
IXFK 170N20T		170	0.011	19600	265	200	0.13	1150	X020a
IXFN 230N20T		220	0.0075	28000	378	200	0.138	1090	X027a
IXFX 230N20T		230	0.0075	28000	378	200	0.09	1670	X015a
IXFK 230N20T		230	0.0075	28000	378	200	0.09	1670	X020a
IXFZ 140N25T	250	100	0.017	19000	255	200	0.28	445	DE475
IXFV 110N25T		110	0.024	9400	157	170	0.18	694	X009a
IXFH 110N25T		110	0.024	9400	157	170	0.18	694	X014a
IXFH 120N25T		120	0.023	11300	180	*108	0.14	890	X014a
IXFT 120N25T		120	0.023	11300	180	*108	0.14	890	X019
IXFN 140N25T		120	0.017	19000	255	200	0.18	690	X027a
IXFX 140N25T		140	0.017	19000	255	200	0.13	960	X015a
IXFK 140N25T		140	0.017	19000	255	200	0.13	960	X020a
IXFN 180N25T		164	0.0129	28000	345	200	0.138	900	X027a
IXFX 180N25T		180	0.0129	28000	345	200	0.09	1390	X015a
IXFK 180N25T		180	0.0129	28000	345	200	0.09	1390	X020a
IXFH 86N30T	300	86	0.043	11300	180	150	0.15	830	X014a
IXFT 86N30T		86	0.043	11300	180	150	0.15	830	X019
IXFH 94N30T		94	0.036	11400	190	*155	0.14	890	X014a
IXFT 94N30T		94	0.036	11400	190	*155	0.14	890	X019
IXFX 120N30T		120	0.024	20000	265	200	0.13	960	X015a
IXFK 120N30T		120	0.024	20000	265	200	0.13	960	X020a
IXFN 160N30T		130	0.019	28000	335	200	0.138	900	X027a
IXFX 160N30T		160	0.019	28000	335	200	0.09	1390	X015a
IXFK 160N30T		160	0.019	28000	335	200	0.09	1390	X020a

Package style
Outline drawings on pages O-30...O-55

D5 **DE 475**

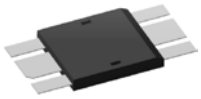

X005a **TO-220AB**

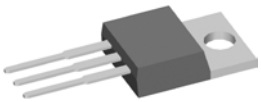

X009a **PLUS220™**

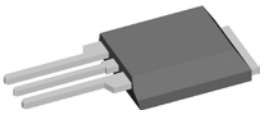

X011b **TO-263AB**

X014a **TO-247AD**

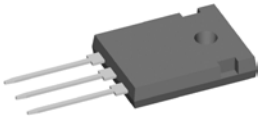

X015a **PLUS247**

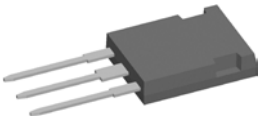

X016a **ISOPLUS247™**

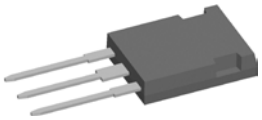

X019 **TO-268AA**

X020a **TO-264**

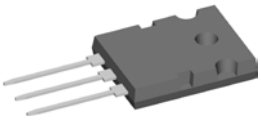

X027a **SOT-227B miniBLOC**

TrenchT2™ Power MOSFETs

Part Type w	V_{DSS} V	$I_{D(cont)}$ Chip $T_C = 25°C$ A	$R_{DS(on)}$ $T_C = 25°C$ Ω	C_{iss} typ. pF	Q_g typ. nC	t_{rr} typ. ns	R_{thJC} K/W	P_D W	Fig. No.	Package style Outline drawings on pages O-30...O-55
IXTP 100N04T2	40	100	0.007	2690	25.5	34	1.00	150	X005a	D5 **DE 475**
IXTA 100N04T2		100	0.007	2690	25.5	34	1.00	150	X011b	
IXTP 120N04T2		120	0.0061	3240	58	35	0.75	200	X005a	
IXTA 120N04T2		120	0.0061	3240	58	35	0.75	200	X011b	
IXTP 160N04T2		160	0.005	4640	79	40	0.60	250	X005a	X004 **TO-252AA**
IXTA 160N04T2		160	0.005	4640	79	40	0.60	250	X011b	
IXTP 220N04T2		220	0.0035	6820	112	45	0.42	360	X005a	
IXTA 220N04T2		220	0.0035	6820	112	45	0.42	360	X011b	X005a **TO-220AB**
IXTA 220N04T2-7		220	0.0035	6820	112	45	0.42	360	X012b	
IXTP 300N04T2		300	0.0025	10700	145	53	0.31	480	X005a	
IXTH 300N04T2		300	0.0025	10700	145	53	0.31	480	X014a	
IXTA 300N04T2		300	0.0025	10700	145	53	0.31	480	X011b	X009a **PLUS220**
IXTA 300N04T2-7		300	0.0025	10700	145	53	0.31	480	X012b	
IXTH 420N04T2		420	0.002	19700	315	74	0.16	935	X014a	
IXTH 500N04T2		500	0.0016	25000	405	84	0.15	1000	X014a	
IXTT 500N04T2		500	0.0016	25000	405	84	0.15	1000	X019	X011b **TO-263AB**
IXTX 600N04T2		600	0.0015	40000	590	100	0.12	1250	X015a	
IXTN 600N04T2		600	0.00105	40000	590	100	0.16	940	X027a	
IXTK 600N04T2		600	0.0015	40000	590	100	0.12	1250	X020a	
IXTA 90N055T2	55	90	0.0084	2770	42	37	1.00	150	X011b	X012b **TO-263AB**
IXTP 90N055T2		90	0.0084	2770	42	37	1.00	150	X005a	
IXTY 90N055T2		90	0.0084	2770	42	37	1.00	150	X004	
IXTP 110N055T2		110	0.0066	3060	57	38	0.82	180	X005a	X014a **TO-247AD**
IXTA 110N055T2		110	0.0066	3060	57	38	0.82	180	X011b	
IXTP 140N055T2		140	0.0054	4760	82	40	0.60	250	X005a	
IXTA 140N055T2		140	0.0054	4760	82	40	0.60	250	X011b	
IXTP 200N055T2		200	0.0042	6970	109	49	0.42	360	X005a	X015a **PLUS247**
IXTA 200N055T2		200	0.0042	6970	109	49	0.42	360	X011b	
IXTA 200N055T2-7		200	0.0042	6970	109	49	0.42	360	X012b	
IXTP 260N055T2		260	0.0033	10800	140	60	0.31	480	X005a	
IXTH 260N055T2		260	0.0033	10800	140	60	0.31	480	X014a	X019 **TO-268AA**
IXTA 260N055T2		260	0.0033	10800	140	60	0.31	480	X011b	
IXTA 260N055T2-7		260	0.0033	10800	140	60	0.31	480	X012b	
IXTV 270N055T2		270	0.003	9700	167	63	0.24	625	X009a	
IXTH 360N055T2		360	0.0024	20000	330	78	0.16	935	X014a	X020a **TO-264**
IXTT 360N055T2		360	0.0024	20000	330	78	0.16	935	X019	
IXTH 440N055T2		440	0.0018	25000	405	76	0.15	1000	X014a	
IXTT 440N055T2		440	0.0018	25000	405	76	0.15	1000	X019	
IXTX 550N055T2		550	0.0016	40000	595	100	0.12	1250	X015a	X027a **SOT-227B miniBLOC**
IXTN550N055T2		550	0.0013	40000	595	100	0.16	940	X027a	
IXTK 550N055T2		550	0.0016	40000	595	100	0.12	1250	X020a	
IXTZ 550N055T2		550	0.001	40000	595	100	0.25	600	D5	
IXTP 130N065T2	65	130	0.0066	4800	79	41	0.60	250	X005a	
IXTA 130N065T2		130	0.0066	4800	79	41	0.60	250	X011b	

TrenchT2™ Power MOSFETs

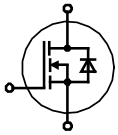

Part Type	V_{DSS} V	$I_{D(cont)}$ Chip $T_C = 25°C$ A	$R_{DS(on)}$ $T_C = 25°C$ Ω	C_{iss} typ. pF	Q_g typ. nC	t_{rr} typ. ns	R_{thJC} K/W	P_D W	Fig. No.	Package style Outline drawings on pages O-30...O-55
IXTP 70N075T2	75	70	0.012	2580	46	48	1.00	150	X005a	X005a **TO-220AB**
IXTA 70N075T2		70	0.012	2580	46	48	1.00	150	X011b	
IXTP 90N075T2		90	0.01	3290	54	50	0.82	180	X005a	
IXTA 90N075T2		90	0.01	3290	54	50	0.82	180	X011b	
IXTP 120N075T2		120	0.0077	4740	78	50	0.60	250	X005a	X011b **TO-263AB**
IXTA 120N075T2		120	0.0077	4740	78	50	0.60	250	X011b	
IXTP 170N075T2		170	0.0054	6860	109	63	0.42	360	X005a	
IXTA 170N075T2		170	0.0054	6860	109	63	0.42	360	X011b	
IXTP 230N075T2		230	0.0042	10.5	178	66	0.31	480	X005a	
IXTA 230N075T2		230	0.0042	10.5	178	66	0.31	480	X011b	X012b **TO-263AB**
IXTA 230N075T2-7		230	0.0042	10500	178	66	0.31	480	X012b	
IXTP 80N12T2	120	80	0.017	4740	80	90	0.46	325	X005a	
IXTA 80N12T2		80	0.017	4740	80	90	0.46	325	X011b	

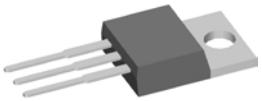

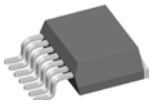

TrenchT2 Power MOSFETs (SMPD Package)

Part Type ➢ New	V_{DSS} V	$I_{D(cont)}$ Chip $T_C = 25°C$ A	$R_{DS(on)}$ $T_C = 25°C$ Ω	C_{iss} typ. pF	Q_g typ. nC	t_{rr} typ. ns	R_{thJC} K/W	P_D W	Fig. No.	Package style Outline drawings on pages O-30...O-55
➢ **MMIX 1T600N04T2**	40	600	0.0013	40000	590	100	0.18	830	X031a	
➢ **MMIX 1T550N055T2**	55	550	0.0013	40000	595	100	0.18	830	X031a	

X031a **SMPD-X**

TrenchT2 HiPerFETs (SMPD Package)

Part Type ➢ New	V_{DSS} V	$I_{D(cont)}$ Chip $T_C = 25°C$ A	$R_{DS(on)}$ $T_C = 25°C$ Ω	C_{iss} typ. pF	Q_g typ. nC	t_{rr} typ. ns	R_{thJC} K/W	P_D W	Fig. No.
➢ **MMIX 1F520N075T2**	75	500	0.0016	41000	545	150	0.18	830	X031a

TrenchT2™ HiPerFETs

Part Type ➢ New	V_{DSS} V	$I_{D(cont)}$ Chip T_C = 25°C A	$R_{DS(on)}$ T_J = 25°C Ω	C_{iss} typ. pF	Q_g typ. nC	t_{rr} typ. ns	R_{thJC} K/W	P_D W	Fig. No.	Package style Outline drawings on pages O-30...O-55
IXFP 230N075T2	75	230	0.0042	10500	178	59	0.31	480	X007a	D5 **DE 475**
IXFH 230N075T2		230	0.0042	10500	178	59	0.31	480	X014a	
IXFA 230N075T2		230	0.0042	10500	178	59	0.31	480	X011b	
IXFA 230N075T2-7		230	0.0042	10500	178	59	0.31	480	X012b	
IXFH 340N075T2		340	0.0032	19000	300	75	0.16	935	X014a	X007a **TO-220FPAB**
IXFT 340N075T2		340	0.0032	19000	300	75	0.16	935	X019	
IXFH 400N075T2		400	0.0023	24000	420	77	0.15	1000	X014a	
IXFT 400N075T2		400	0.0023	24000	420	77	0.15	1000	X019	
IXFZ 520N075T2		465	0.0013	41000	545	na	0.25	600	D5	X011b **TO-263AB**
IXFN 520N075T2		480	0.0019	41000	545	na	0.16	940	X027a	
IXFX 520N075T2		520	0.0022	41000	545	na	0.12	1250	X015a	
IXFK 520N075T2		520	0.0022	41000	545	na	0.12	1250	X020a	
IXFP 130N10T2	100	130	0.0091	6600	130	na	0.42	360	X007a	
IXFA 130N10T2		130	0.0091	6600	130	na	0.42	360	X011b	X012b **TO-263AB**
IXFP 180N10T2		180	0.006	10500	185	66	0.31	480	X007a	
IXFA 180N10T2		180	0.006	10500	185	66	0.31	480	X011b	
IXFH 320N10T2		320	0.0035	25000	430	98	0.15	1000	X014a	
IXFT 320N10T2		320	0.0035	26000	430	98	0.15	1000	X019	X014a **TO-247AD**
IXFP 76N15T2	150	76	0.02	5800	97	69	0.43	350	X007a	
IXFA 76N15T2		76	0.02	5800	97	69	0.43	350	X011b	
IXFP 110N15T2		110	0.013	8600	150	85	0.31	480	X007a	
IXFH 110N15T2		110	0.013	8600	150	85	0.31	480	X014a	X015a **PLUS247**
IXFA 110N15T2		110	0.013	8600	150	85	0.31	480	X011b	
IXFH 160N15T2		160	0.009	15000	253	na	0.17	880	X014a	
IXFX 240N15T2		240	0.0052	32000	460	na	0.12	1250	X015a	
IXFN 240N15T2		240	0.0052	32000	460	na	0.18	830	X027a	
IXFK 240N15T2		240	0.0052	32000	460	na	0.12	1250	X020a	X019 **TO-268AA**
IXFN 360N15T2		310	0.004	47500	715	na	0.14	1070	X027a	
IXFX 360N15T2		360	0.004	47500	715	na	0.09	1670	X015a	
IXFK 360N15T2		360	0.004	47500	715	na	0.09	1670	X020a	
IXFX 220N17T2	170	220	0.0063	31000	500	na	0.12	1250	X015a	X020a **TO-264**
IXFK 220N17T2		220	0.0063	31000	500	na	0.12	1250	X020a	
IXFN 320N17T2		260	0.0052	45000	640	na	0.14	1070	X027a	
IXFX 320N17T2		320	0.0052	45000	640	na	0.09	1670	X015a	
IXFK 320N17T2		320	0.0052	45000	640	na	0.09	1670	X020a	X027a **SOT-227B miniBLOC**
IXFH 150N17T2	175	150	0.012	14600	233	na	0.17	880	X014a	
IXFT 150N17T2		150	0.012	14600	233	na	0.17	880	X019	

Polar™ Standard MOSFETs

Part Type ➢ New	V_{DSS} V	$I_{D(cont)}$ Chip T_C = 25°C A	$R_{DS(on)}$ T_J = 25°C Ω	C_{iss} typ pF	Q_g typ nC	t_{rr} typ ns	R_{thJC} K/W	P_D W	Fig. No.	Package style Outline drawings on pages O-30...O-55
IXTP 75N10P	100	75	0.025	2250	74	120	0.42	360	X005a	X005a **TO-220AB**
IXTA 75N10P		75	0.025	2250	74	120	0.42	360	X011b	
IXTQ 75N10P		75	0.025	2250	74	120	0.42	360	X017a	
IXTT 110N10P		110	0.015	3550	110	130	0.31	480	X019	
IXTQ 110N10P		110	0.015	3550	110	130	0.31	480	X017a	
IXTR 200N10P		120	0.008	7600	235	100	0.50	300	X016a	
IXTT 140N10P		140	0.011	4700	155	120	0.25	600	X019	X007a **TO-220FPAB**
IXTQ 140N10P		140	0.011	4700	155	120	0.25	600	X017a	
IXTK 170N10P		170	0.009	6000	198	120	0.21	715	X020a	
IXTT 170N10P		170	0.009	6000	198	120	0.21	715	X019	
IXTQ 170N10P		170	0.009	6000	198	120	0.21	715	X017a	
IXTK 200N10P		200	0.0075	7600	240	100	0.18	800	X020a	
IXTP 62N15P	150	62	0.04	2250	70	150	0.42	350	X005a	X011b **TO-263AB**
IXTA 62N15P		62	0.04	2250	70	150	0.42	350	X011b	
IXTQ 62N15P		62	0.04	2250	70	150	0.42	350	X017a	
IXTT 96N15P		96	0.024	3500	110	150	0.31	480	X019	
IXTQ 96N15P		96	0.024	3500	110	150	0.31	480	X017a	X014a **TO-247AD**
IXTT 120N15P		120	0.016	4900	150	150	0.25	600	X019	
IXTQ120N15P		120	0.016	4900	150	150	0.25	600	X017a	
IXTK150N15P		150	0.013	5800	190	150	0.21	714	X020a	
IXTQ150N15P		150	0.013	5800	190	150	0.21	714	X017a	
IXTK 180N15P		180	0.01	7000	240	150	0.18	800	X020a	
IXTP 50N20PM	200	20	0.06	2720	70	150	1.66	90	X007a	
IXTP 50N20P		50	0.06	2720	70	150	0.42	360	X005a	X016a **ISOPLUS247™**
IXTA 50N20P		50	0.06	2720	70	150	0.42	360	X011b	
IXTQ 50N20P		50	0.06	2720	70	150	0.42	360	X017a	
IXTT 74N20P		74	0.034	3300	107	160	0.31	480	X019	
IXTQ 74N20P		74	0.034	3300	107	160	0.31	480	X017a	
IXTH 96N20P		96	0.024	4800	145	160	0.25	600	X014a	
IXTT 96N20P		96	0.024	4800	145	160	0.25	600	X019	X017a **TO-3P**
IXTQ 96N20P		96	0.024	4800	145	160	0.25	600	X017a	
IXTK 120N20P		120	0.022	6000	152	180	0.21	714	X020a	
IXTQ 120N20P		120	0.022	6000	152	180	0.21	714	X017a	
IXTK 140N20P		140	0.018	7500	240	180	0.18	800	X020a	
IXTP 42N25P	250	42	0.084	2300	70	200	0.42	300	X005a	
IXTA 42N25P		42	0.084	2300	70	200	0.42	300	X011b	X019 **TO-268AA**
IXTQ 42N25P		42	0.084	2300	70	200	0.42	300	X017a	
IXTT 64N25P		64	0.049	3450	105	200	0.31	400	X019	
IXTQ 64N25P		64	0.049	3450	105	200	0.31	400	X017a	
IXTK 82N25P		82	0.035	4800	142	200	0.25	500	X020a	
IXTT 82N25P		82	0.035	4800	142	200	0.25	500	X019	X020a **TO-264**
IXTQ 82N25P		82	0.035	4800	142	200	0.25	500	X017a	
IXTK 100N25P		100	0.027	6300	185	200	0.21	600	X020a	
IXTT 100N25P		100	0.027	6300	185	200	0.21	600	X019	
IXTQ 100N25P		100	0.027	6300	185	200	0.21	600	X017a	
IXTK 120N25P	250	120	0.024	8700	185	200	0.18	700	X020a	

Polar™ Standard MOSFETs

Part Type	V_{DSS} V	$I_{D(cont)}$ Chip $T_C = 25°C$ A	$R_{DS(on)}$ $T_J = 25°C$ Ω	C_{iss} typ pF	Q_g typ nC	t_{rr} typ ns	R_{thJC} K/W	P_D W	Fig. No.	Package style Outline drawings on pages O-30...O-55
IXTQ 69N30PM	300	25	0.049	4960	156	250	1.38	90	X017c	X003 TO-251AA
IXTP 36N30P		36	0.11	2250	70	250	0.42	300	X005a	
IXTA 36N30P		36	0.11	2250	70	250	0.42	300	X011b	
IXTQ 36N30P		36	0.11	2250	70	250	0.42	300	X017a	
IXTT 52N30P		52	0.066	3490	110	250	0.31	400	X019	X004 TO-252AA
IXTQ 52N30P		52	0.066	3490	110	250	0.31	400	X017a	
IXTT 69N30P		69	0.049	4960	156	330	0.25	500	X019	
IXTQ 69N30P		69	0.049	4960	156	330	0.25	500	X017a	
IXTH 88N30P		88	0.04	6300	180	250	0.21	600	X014a	X005a TO-220AB
IXTK 88N30P		88	0.04	6300	180	250	0.21	600	X020a	
IXTT 88N30P		88	0.04	6300	180	250	0.21	600	X019	
IXTQ 88N30P		88	0.04	6300	180	250	0.21	600	X017a	X007a TO-220FPAB
IXTK 102N30P		102	0.033	7500	224	250	0.18	700	X020a	
IXTK 140N30P		140	0.24	14800	185	250	0.12	1040	X020a	
IXTP 1R6N50P	500	1.6	6.5	140	3.9	400	2.90	43	X005a	
IXTY 1R6N50P		1.6	6.5	140	3.9	400	2.90	43	X004	X009a PLUS220
IXTP 2R4N50P		2.4	3.75	240	6.1	400	2.25	55	X005a	
IXTY 2R4N50P		2.4	3.75	240	6.1	400	2.25	55	X004	
IXTA 3N50P		3.6	2	409	9.3	400	1.80	70	X011b	
IXTP 3N50P		3.6	2	409	9.3	400	1.80	70	X005a	X010a ISOPLUS220™
IXTY 3N50P		3.6	2	409	9.3	400	1.80	70	X004	
IXTP 8N50PM		4	0.88	1050	20	400	3.00	41	X007a	
IXTA 5N50P		5	1.4	620	12.6	400	1.40	89	X011b	X011b TO-263AB
IXTP 5N50P		5	1.4	620	12.6	400	1.40	89	X005a	
IXTU 5N50P		5	1.4	620	12.6	400	1.40	89	X003	
IXTY 5N50P		5	1.4	620	12.6	400	1.40	89	X004	
IXTA 6N50P		6	1.1	740	14.6	400	1.25	100	X011b	X014a TO-247AD
IXTP 6N50P		6	1.1	740	14.6	400	1.25	100	X005a	
IXTP 12N50PM		6	0.5	1830	29	400	2.50	50	X007a	
IXTP 16N50PM		7.5	0.42	2480	43	400	1.66	75	X007a	
IXTP 8N50P		8	0.8	1050	20	400	0.83	150	X005a	X017a TO-3P
IXTP 22N50PM		8	0.27	2880	50	400	2.90	43	X007a	
IXTA 8N50P		8	0.8	1050	20	400	0.83	150	X011b	
IXTP 12N50P		12	0.5	1830	29	300	0.62	200	X005a	
IXTA 12N50P		12	0.5	1830	29	300	0.62	200	X011b	X017c TO-3PFP
IXTC 26N50P		15	0.26	3600	65	400	0.95	130	X010a	
IXTP 16N50P		16	0.4	2480	43	400	0.42	300	X005a	
IXTA 16N50P		16	0.4	2480	43	400	0.42	300	X011b	
IXTQ 16N50P		16	0.4	2480	43	400	0.42	300	X017a	X019 TO-268AA
IXTV 22N50P		22	0.27	2880	50	400	0.35	350	X009a	
IXTH 22N50P		22	0.27	2880	50	400	0.35	350	X014a	
IXTQ 22N50P		22	0.27	2880	50	400	0.35	350	X017a	
IXTV 26N50P		26	0.23	3600	65	300	0.31	400	X009a	X020a TO-264
IXTT 26N50P		26	0.23	3600	65	300	0.31	400	X019	
IXTQ 26N50P		26	0.23	3600	65	300	0.31	400	X017a	
IXTV 30N50P		30	0.2	4150	70	400	0.27	460	X009a	

Polar™ Standard MOSFETs

Part Type	V_{DSS} V	$I_{D(cont)}$ Chip $T_C = 25°C$ A	$R_{DS(on)}$ $T_J = 25°C$ Ω	C_{iss} typ pF	Q_g typ nC	t_{rr} typ ns	R_{thJC} K/W	P_D W	Fig. No.	Package style Outline drawings on pages O-30...O-55
IXTH 30N50P	500	30	0.2	4150	70	400	0.27	460	X014a	
IXTT 30N50P		30	0.2	4150	70	400	0.27	460	X019	X003 **TO-251AA**
IXTQ 30N50P		30	0.2	4150	70	400	0.27	460	X017a	
IXTV 36N50P		36	0.17	4700	82	400	0.23	540	X009a	
IXTH 36N50P		36	0.17	4700	82	400	0.23	540	X014a	
IXTT 36N50P		36	0.17	4700	82	400	0.23	540	X019	
IXTQ 36N50P		36	0.17	4700	82	400	0.23	540	X017a	X004 **TO-252AA**
IXTQ 44N50P		44	0.14	5440	98	400	0.19	650	X017a	
IXTP 1R4N60P	600	1.4	9	140	5.2	500	2.50	50	X005a	
IXTU 1R4N60P		1.4	9	140	5.2	500	2.50	50	X003	
IXTY 1R4N60P		1.4	9	140	5.2	500	2.50	50	X004	X005a **TO-220AB**
IXTP 2N60P		2	5.1	240	7	400	2.25	55	X005a	
IXTY 2N60P		2	5.1	240	7	400	2.25	55	X004	
IXTA 3N60P		3	2.9	411	9.8	500	1.80	70	X011b	
IXTP 3N60P		3	2.9	411	9.8	500	1.80	70	X005a	
IXTY 3N60P		3	2.9	411	9.8	500	1.80	70	X004	X007a **TO-220FPAB**
IXTA 4N60P		4	2	635	13	500	1.41	89	X011b	
IXTY 4N60P		4	2	635	13	500	1.41	89	X004	
IXTU 4N60P		4	2	635	13	500	1.41	89	X003	
IXTP 4N60P		4	2	635	13	500	1.41	89	X005a	
IXTP 7N60PM		4	1.1	1180	20	500	3.00	41	X007a	X009a **PLUS220**
IXTA 5N60P		5	1.7	750	14.2	500	1.25	100	X011b	
IXTP 5N60P		5	1.7	750	14.2	500	1.25	100	X005a	
IXTP 10N60PM		5	0.74	1610	32	500	2.50	50	X007a	
IXTP 14N60PM		7	0.55	2500	36	500	1.66	75	X007a	
IXTP 7N60P		7	1.1	1080	20	500	0.83	150	X005a	X011b **TO-263AB**
IXTA 7N60P		7	1.1	1080	20	500	0.83	150	X011b	
IXTP 18N60PM		9	0.42	2500	50	500	1.39	90	X007a	
IXTP 10N60P		10	0.74	1720	32	500	0.62	200	X005a	
IXTA 10N60P		10	0.74	1720	32	500	0.62	200	X011b	
IXTP 14N60P		14	0.55	2500	36	500	0.42	300	X005a	X014a **TO-247AD**
IXTA 14N60P		14	0.55	2500	36	500	0.42	300	X011b	
IXTQ 14N60P		14	0.55	2500	36	500	0.42	300	X017a	
IXTV 18N60P		18	0.42	2500	49	500	0.35	360	X009a	
IXTQ18N60P		18	0.42	2500	49	500	0.35	360	X017a	
IXTV 22N60P		22	0.35	3600	62	500	0.31	400	X009a	X017a **TO-3P**
IXTQ 22N60P		22	0.35	3600	62	500	0.31	400	X017a	
IXTV 26N60P		26	0.27	4150	72	500	0.27	460	X009a	
IXTH 26N60P		26	0.27	4150	72	500	0.27	460	X014a	
IXTT 26N60P		26	0.27	4150	72	500	0.27	460	X019	
IXTQ 26N60P		26	0.27	4150	72	500	0.27	460	X017a	X019 **TO-268AA**
IXTV 30N60P		30	0.24	5050	82	500	0.23	540	X009a	
IXTH 30N60P		30	0.24	5050	82	500	0.23	540	X014a	
IXTT 30N60P		30	0.24	5050	82	500	0.23	540	X019	
IXTQ 30N60P		30	0.24	5050	82	500	0.23	540	X017a	

Polar™ Standard MOSFETs

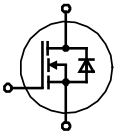

Part Type	V_{DSS} V	$I_{D(cont)}$ Chip $T_C = 25°C$ A	$R_{DS(on)}$ $T_J = 25°C$ Ω	C_{iss} typ pF	Q_g typ nC	t_{rr} typ ns	R_{thJC} K/W	P_D W	Fig. No.	Package style Outline drawings on pages O-30...O-55
IXTA 1N80P	800	1	14	250	9	700	3.00	42	X011b	
IXTP 1N80P		1	14	250	9	700	3.00	42	X005a	X003 **TO-251AA**
IXTU 1N80P		1	14	250	9	700	3.00	42	X003	
IXTY 1N80P		1	14	250	9	700	3.00	42	X004	
IXTA 2N80P		2	6	440	10.6	650	1.80	70	X011b	
IXTP 2N80P		2	6	440	10.6	650	1.80	70	X005a	
IXTU 2N80P		2	6	440	10.6	650	1.80	70	X003	
IXTY 2N80P		2	6	440	10.6	650	1.80	70	X004	
IXTA 4N80P		3.5	3	750	15	600	1.25	100	X011b	
IXTP 4N80P		3.5	3	750	15	600	1.25	100	X005a	
IXTP 05N100P	1000	0.5	30	196	8.1	750	2.50	50	X005a	X004 **TO-252AA**
IXTA 05N100P		0.5	30	196	8.1	750	2.50	50	X011b	
IXTP 08N100P		0.8	20	240	11.3	750	3.00	42	X005a	
IXTY 08N100P		0.8	20	240	11.3	750	3.00	42	X004	
IXTA 08N100P		0.8	20	240	11.3	750	3.00	42	X011b	
IXTP 1N100P		1	15	331	15.5	750	2.50	50	X005a	
IXTY 1N100P		1	15	331	15.5	750	2.50	50	X004	
IXTA 1N100P		1	15	331	15.5	750	2.50	50	X011b	
IXTP 1R4N100P		1.4	11	450	17.8	750	2.00	63	X005a	X005a **TO-220AB**
IXTY 1R4N100P		1.4	11	450	17.8	750	2.00	63	X004	
IXTA 1R4N100P		1.4	11	666	17.8	750	2.00	63	X011b	
IXTP 2N100P		2	7.5	655	24.3	800	1.45	86	X005a	
IXTY 2N100P		2	7.5	655	24.3	800	1.45	86	X004	
IXTA 2N100P		2	7.5	655	24.3	800	1.45	86	X011b	
IXTP 3N100P		3	4.8	1100	39	820	1.00	125	X005a	
IXTH 3N100P		3	4.8	1100	39	820	1.00	125	X014a	X011b **TO-263AB**
IXTA 3N100P		3	4.8	1100	39	820	1.00	125	X011b	
IXTP 02N120P	1200	0.2	75	104	4.7	1600	3.80	33	X005a	
IXTY 02N120P		0.2	75	104	4.7	1600	3.80	33	X004	
IXTP 06N120P		0.6	34	236	13.3	900	3.00	42	X005a	
IXTA 06N120P		0.6	34	236	13.3	900	3.00	42	X011b	
IXTP 08N120P		0.8	25	333	14	900	2.50	50	X005a	
IXTA 08N120P		0.8	25	333	14	900	2.50	50	X011b	
IXTP 1N120P		1	20	445	17.6	900	2.00	63	X005a	X014a **TO-247AD**
IXTA 1N120P		1	20	445	17.6	900	2.00	63	X011b	
IXTP 1R4N120P		1.4	13	666	24.8	900	1.45	86	X005a	
IXTA 1R4N120P		1.4	13	725	24.8	900	1.45	86	X011b	
IXTP 2R4N120P		2.4	7.5	1207	37	920	1.00	125	X005a	
IXTH 2R4N120P		2.4	7.5	1207	37	920	1.00	125	X014a	
IXTA 2R4N120P		2.4	7.5	1207	37	920	1.00	125	X011b	

Polar™ HiPerFETs with Fast Intrinsic Diode

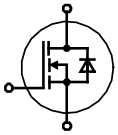

Part Type	V_{DSS} V	$I_{D(cont)}$ Chip $T_C = 25°C$ A	$R_{DS(on)}$ $T_J = 25°C$ Ω	C_{iss} typ pF	Q_g typ nC	t_{rr} typ ns	R_{thJC} K/W	P_D W	Fig. No.
IXFC 110N10P	100	60	0.017	3550	110	150	1.25	120	X010a
IXFV 110N10P		110	0.015	3550	110	150	0.31	480	X009a
IXFH 110N10P		110	0.015	3550	110	150	0.31	480	X014a
IXFR 200N10P		133	0.009	7600	235	150	0.50	300	X016a
IXFH 140N10P		140	0.011	4700	155	150	0.25	600	X014a
IXFT 140N10P		140	0.011	4700	155	150	0.25	600	X019
IXFH 170N10P		170	0.009	6000	198	150	0.21	715	X014a
IXFK 170N10P		170	0.009	6000	198	150	0.21	715	X020a
IXFX 200N10P		200	0.0075	7600	235	150	0.18	830	X015a
IXFN 200N10P		200	0.0075	7600	235	150	0.22	680	X027a
IXFK 200N10P		200	0.0075	7600	235	150	0.18	830	X020a
IXFX 250N10P		250	0.0065	16000	205	200	0.12	1250	X015a
IXFK 250N10P		250	0.0065	16000	205	200	0.12	1250	X020a
IXFN 300N10P		295	0.0055	23000	279	200	0.14	1070	X027a
IXFB 300N10P		300	0.0055	23000	279	200	0.10	1500	X021a
IXFC 96N15P	150	42	0.026	3500	110	200	1.25	120	X010a
IXFV 96N15P		96	0.024	3500	110	200	0.31	480	X009a
IXFH 96N15P		96	0.024	3500	110	200	0.31	480	X014a
IXFR 180N15P		100	0.013	7000	240	200	0.50	300	X016a
IXFH 120N15P		120	0.016	4900	150	200	0.25	600	X014a
IXFT 120N15P		120	0.016	4900	150	200	0.25	600	X019
IXFN 180N15P		150	0.011	7000	240	200	0.22	680	X027a
IXFH 150N15P		150	0.013	5800	190	200	0.21	714	X014a
IXFK 150N15P		150	0.013	5800	190	200	0.21	714	X020a
IXFX 180N15P		180	0.011	7000	240	200	0.18	830	X015a
IXFK 180N15P		180	0.011	7000	240	200	0.18	830	X020a
IXFX 220N15P		220	0.009	15400	162	200	0.12	1250	X015a
IXFK 220N15P		220	0.009	15400	162	200	0.12	1250	X020a
IXFC 74N20P	200	35	0.036	3300	107	200	1.25	120	X010a
IXFV 74N20P		74	0.034	3300	107	200	0.31	480	X009a
IXFH 74N20P		74	0.034	3300	107	200	0.31	480	X014a
IXFR 140N20P		90	0.022	7500	240	200	0.50	300	X016a
IXFV 96N20P		96	0.024	4800	145	200	0.25	600	X009a
IXFH 96N20P		96	0.024	4800	145	200	0.25	600	X014a
IXFT 96N20P		96	0.024	4800	145	200	0.25	600	X019
IXFN 140N20P		115	0.018	7500	240	200	0.22	680	X027a
IXFH 120N20P		120	0.022	6000	152	200	0.21	714	X014a
IXFK 120N20P		120	0.022	6000	152	200	0.21	714	X020a
IXFK 140N20P		140	0.018	7500	240	200	0.18	830	X020a
IXFX 170N20P		170	0.014	11400	185	200	0.12	1250	X015a
IXFK 170N20P		170	0.014	11400	185	200	0.12	1250	X020a
IXFN 210N20P		188	0.0105	18600	255	200	0.14	1070	X027a
IXFB 210N20P		210	0.0105	18600	255	200	0.10	1500	X021a
IXFH 100N25P	250	100	0.027	6300	185	200	0.21	600	X014a
IXFX 120N25P		120	0.024	8700	185	200	0.18	700	X015a
IXFK 120N25P		120	0.024	8700	185	200	0.18	700	X020a
IXFC 52N30P	300	24	0.075	3490	110	200	1.25	100	X010a
IXFV 52N30P		52	0.066	3490	110	200	0.31	400	X009a
IXFH 52N30P		52	0.066	3490	110	200	0.31	400	X014a
IXFR 102N30P		60	0.036	7500	224	200	0.50	250	X016a
IXFH 69N30P		69	0.049	4960	156	200	0.25	500	X014a
IXFT 69N30P		69	0.049	4960	156	200	0.25	500	X019

Package style
Outline drawings on pages O-30...O-55

X009a **PLUS220**

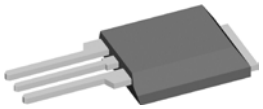

X010a **ISOPLUS220™**

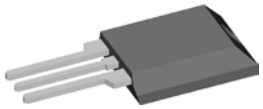

X014a **TO-247AD**

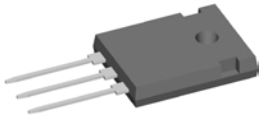

X015a **PLUS247**

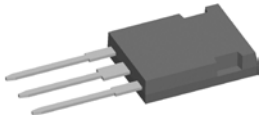

X016a **ISOPLUS247™**

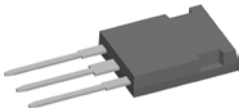

X019 **TO-268AA**

X020a **TO-264**

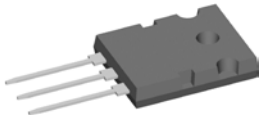

X021a **PLUS264**

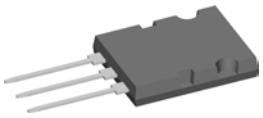

X027a **SOT-227B miniBLOC**

Polar™ HiPerFETs with Fast Intrinsic Diode

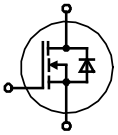

Part Type	V_{DSS} V	$I_{D(cont)}$ Chip $T_C = 25°C$ A	$R_{DS(on)}$ $T_J = 25°C$ Ω	C_{iss} typ pF	Q_g typ nC	t_{rr} typ ns	R_{thJC} K/W	P_D W	Fig. No.	Package style Outline drawings on pages O-30...O-55
IXFR 140N30P	300	70	0.026	14800	185	200	0.35	360	X016a	X005a **TO-220AB**
IXFN 102N30P		86	0.033	7500	224	200	0.22	570	X027a	
IXFH 88N30P		88	0.04	6300	180	200	0.21	600	X014a	
IXFK 88N30P		88	0.04	6300	180	200	0.21	600	X020a	
IXFT 88N30P		88	0.04	6300	180	200	0.21	600	X019	
IXFK 102N30P		102	0.033	7500	224	200	0.18	700	X020a	X007a **TO-220FPAB**
IXFN 140N30P		110	0.024	14800	185	200	0.18	700	X027a	
IXFN 170N30P		138	0.0018	20000	258	200	0.14	890	X027a	
IXFX 140N30P		140	0.024	14800	185	200	0.12	1040	X015a	
IXFK 140N30P		140	0.024	14800	185	200	0.12	1040	X020a	
IXFB 170N30P		170	0.018	20000	258	200	0.10	1250	X021a	X009a **PLUS220**
IXFP 3N50PM	500	2.7	2	409	9.3	200	3.50	36	X007a	
IXFP 5N50PM		3.2	1.4	620	12.6	200	3.30	38	X007a	
IXFP 8N50PM		4.4	0.8	1050	20	200	3.00	42	X007a	
IXFP12N50PM		6	0.5	1830	29	300	2.50	50	X007a	
IXFC 16N50P		10	0.45	2480	43	200	1.00	125	X010a	X010a **ISOPLUS220™**
IXFP 12N50P		12	0.5	1830	29	200	0.62	200	X005a	
IXFA 12N50P		12	0.5	1830	29	200	0.62	200	X011b	
IXFC 26N50P		15	0.26	3600	65	250	0.95	130	X010a	
IXFP 16N50P		16	0.4	2480	43	200	0.42	300	X005a	
IXFH 16N50P		16	0.4	2480	43	200	0.42	300	X014a	X011b **TO-263AB**
IXFA 16N50P		16	0.4	2480	43	200	0.42	300	X011b	
IXFC 36N50P		19	0.19	5500	93	250	0.75	156	X010a	
IXFR 36N50P		19	0.19	5500	93	200	0.75	156	X016a	
IXFV 22N50P		22	0.27	2880	50	200	0.35	350	X009a	X013 **PLUS220SMD**
IXFH 22N50P		22	0.27	2880	50	200	0.35	350	X014a	
IXFR 44N50P		24	0.15	5440	98	200	0.60	208	X016a	
IXFV 26N50P		26	0.23	3600	60	200	0.31	400	X009a	
IXFH 26N50P		26	0.23	3600	60	200	0.31	400	X014a	
IXFV 30N50P		30	0.2	4150	70	200	0.27	460	X009a	X014a **TO-247AD**
IXFH 30N50P		30	0.2	4150	70	200	0.27	460	X014a	
IXFT 30N50P		30	0.2	4150	70	200	0.27	460	X019	
IXFV 36N50P		36	0.17	5500	93	200	0.23	540	X009a	
IXFH 36N50P		36	0.17	5500	93	200	0.23	540	X014a	
IXFT 36N50P		36	0.17	5500	93	200	0.23	540	X019	X015a **PLUS247**
IXFR 64N50P		37	0.095	9700	150	200	0.42	300	X016a	
IXFH 44N50P		44	0.14	5440	98	200	0.19	650	X014a	
IXFK 44N50P		44	0.14	5440	98	200	0.19	650	X020a	
IXFT 44N50P		44	0.14	5440	98	200	0.19	650	X019	
IXFR 80N50P		45	0.072	12700	197	200	0.35	360	X016a	
IXFN 64N50P		50	0.085	9700	150	200	0.20	625	X027a	X016a **ISOPLUS247™**
IXFX 64N50P		64	0.085	9700	150	200	0.15	830	X015a	
IXFK 64N50P		64	0.085	9700	150	200	0.15	830	X020a	
IXFN 80N50P		66	0.065	12700	195	200	0.18	700	X027a	

X027a **SOT-227B miniBLOC**

X021a **PLUS264**

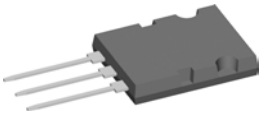

X020a **TO-264**

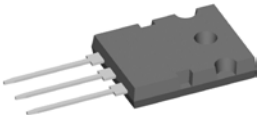

X019 **TO-268AA**

Polar™ HiPerFETs with Fast Intrinsic Diode

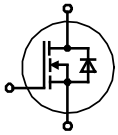

Part Type	V_{DSS} V	$I_{D(cont)}$ Chip $T_C = 25°C$ A	$R_{DS(on)}$ $T_J = 25°C$ Ω	C_{iss} typ pF	Q_g typ nC	t_{rr} typ ns	R_{thJC} K/W	P_D W	Fig. No.	Package style Outline drawings on pages O-30...O-55
IXFL 100N50P	500	70	0.052	20000	240	200	0.20	625	X022a	X005a **TO-220AB**
IXFX 80N50P		80	0.065	12700	197	200	0.12	1040	X015a	
IXFK 80N50P		80	0.065	12700	197	200	0.12	1040	X020a	
IXFN 100N50P		90	0.049	20000	240	200	0.12	1040	X027a	
IXFB 100N50P		100	0.049	20000	240	200	0.10	1250	X021a	
IXFC 14N60P	600	8	0.63	2500	36	200	1.00	125	X010a	X007a **TO-220FPAB**
IXFP 10N60P		10	0.74	1720	32	200	0.62	200	X005a	
IXFA 10N60P		10	0.74	1720	32	200	0.62	200	X011b	
IXFC 22N60P		12	0.36	4000	58	200	0.95	130	X010a	
IXFP 14N60P		14	0.55	2500	36	200	0.42	300	X005a	X009a **PLUS220**
IXFH 14N60P		14	0.55	2500	36	200	0.42	300	X014a	
IXFA 14N60P		14	0.55	2500	36	200	0.42	300	X011b	
IXFC 30N60P		15	0.25	3820	85	200	0.75	166	X010a	
IXFR 30N60P		15	0.25	3820	85	200	0.75	166	X016a	
IXFV 18N60P		18	0.4	2500	50	200	0.35	360	X009a	
IXFH 18N60P		18	0.4	2500	50	200	0.35	360	X014a	X010a **ISOPLUS220™**
IXFR 36N60P		20	0.2	5800	102	200	0.60	208	X016a	
IXFV 22N60P		22	0.35	3600	58	200	0.31	400	X009a	
IXFH 22N60P		22	0.35	3600	58	200	0.31	400	X014a	
IXFV 26N60P		26	0.27	4150	72	200	0.27	460	X009a	
IXFH 26N60P		26	0.27	4150	72	200	0.27	460	X014a	X011b **TO-263AB**
IXFT 26N60P		26	0.27	4150	72	200	0.27	460	X019	
IXFV 30N60P		30	0.24	4000	82	200	0.25	500	X009a	
IXFH 30N60P		30	0.24	4000	82	200	0.25	500	X014a	
IXFT 30N60P		30	0.24	4000	82	200	0.25	500	X019	
IXFR 48N60P		32	0.15	8860	150	200	0.42	300	X016a	
IXFR 64N60P		36	0.105	12000	200	200	0.35	360	X016a	X013 **PLUS220SMD**
IXFH 36N60P		36	0.19	5800	102	200	0.19	650	X014a	
IXFK 36N60P		36	0.19	5800	102	200	0.19	650	X020a	
IXFT 36N60P		36	0.19	5800	102	200	0.19	650	X019	
IXFN 48N60P		40	0.14	8860	150	200	0.20	625	X027a	
IXFX 48N60P		48	0.135	8860	150	200	0.15	830	X015a	X014a **TO-247AD**
IXFK 48N60P		48	0.135	8860	150	200	0.15	830	X020a	
IXFN 64N60P		50	0.096	12000	200	200	0.18	700	X027a	
IXFL 82N60P		54	0.08	23000	240	200	0.20	625	X022a	
IXFX 64N60P		64	0.096	12000	200	200	0.12	1040	X015a	
IXFK 64N60P		64	0.096	12000	200	200	0.12	1040	X020a	X015a **PLUS247**
IXFB 82N60P		82	0.075	23000	240	200	0.10	1250	X021a	
IXFN 82N60P		82	0.75	23000	240	200	0.12	1040	X027a	
IXFP 7N80PM	800	3.5	1.44	1890	32	250	2.50	50	X007a	
IXFC 10N80P		5	1.2	2300	40	250	1.25	100	X010a	
IXFC 12N80P		7	0.93	2800	51	250	1.05	120	X010a	
IXFP 7N80P		7	1.44	1800	32	250	0.62	200	X005a	X016a **ISOPLUS247™**
IXFA 7N80P		7	1.44	1800	32	250	0.62	200	X011b	

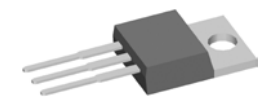

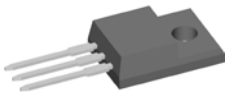

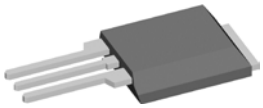

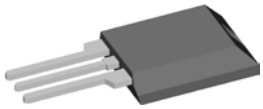

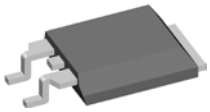

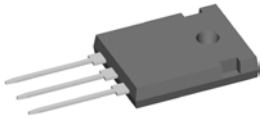

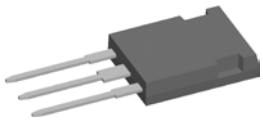

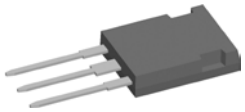

X027a **SOT-227B miniBLOC**

X022a **ISOPLUS264™**

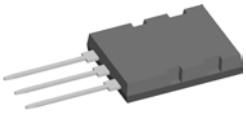

X021a **PLUS264**

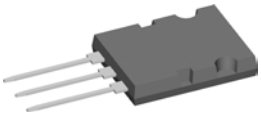

X020a **TO-264**

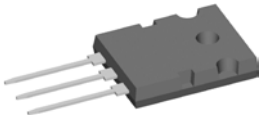

X019 **TO-268AA**

Polar™ HiPerFETs with Fast Intrinsic Diode

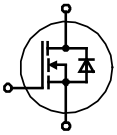

Part Type	V_{DSS} V	$I_{D(cont)}$ Chip $T_C = 25°C$ A	$R_{DS(on)}$ $T_J = 25°C$ Ω	C_{iss} typ pF	Q_g typ nC	t_{rr} typ ns	R_{thJC} K/W	P_D W	Fig. No.
IXFC 14N80P	800	8	0.77	3900	61	250	0.95	130	X010a
IXFC 16N80P		9	0.65	4000	70	250	0.90	138	X010a
IXFC 20N80P		10	0.57	4685	86	250	0.80	160	X010a
IXFR 20N80P		10	0.57	4685	86	250	0.80	160	X016a
IXFP 10N80P		10	1.1	2050	40	250	0.42	300	X005a
IXFH 10N80P		10	1.1	2050	40	250	0.42	300	X014a
IXFA 10N80P		10	1.1	2050	40	250	0.42	300	X011b
IXFQ 10N80P		10	1.1	2050	40	250	0.42	300	X017a
IXFV 12N80P		12	0.85	2800	51	250	0.35	360	X009a
IXFH 12N80P		12	0.85	2800	51	250	0.35	360	X014a
IXFQ 12N80P		12	0.85	2800	51	250	0.35	360	X017a
IXFR 24N80P		13	0.42	7200	105	250	0.60	208	X016a
IXFV 14N80P		14	0.72	3900	61	250	0.31	400	X009a
IXFH 14N80P		14	0.72	3900	61	250	0.31	400	X014a
IXFT 14N80P		14	0.72	3900	61	250	0.31	400	X019
IXFQ 14N80P		14	0.72	3900	61	250	0.31	400	X017a
IXFV 16N80P		16	0.6	4000	70	250	0.27	460	X009a
IXFH 16N80P		16	0.6	4000	70	250	0.27	460	X014a
IXFT 16N80P		16	0.6	4000	70	250	0.27	460	X019
IXFR 32N80P		20	0.29	8800	150	250	0.42	300	X016a
IXFV 20N80P		20	0.52	4685	86	250	0.25	500	X009a
IXFH 20N80P		20	0.52	4685	86	250	0.25	500	X014a
IXFT 20N80P		20	0.52	4685	86	250	0.25	500	X019
IXFH 24N80P		24	0.4	5800	100	250	0.19	650	X014a
IXFK 24N80P		24	0.4	7200	105	250	0.19	650	X020a
IXFT 24N80P		24	0.4	5800	100	250	0.19	650	X019
IXFR 44N80P		26	0.19	12000	200	250	0.35	360	X016a
IXFN 32N80P		29	0.27	8820	150	250	0.20	625	X027a
IXFX 32N80P		32	0.27	8800	150	250	0.15	830	X015a
IXFK 32N80P		32	0.27	8800	150	250	0.15	830	X020a
IXFN 44N80P		36	0.19	12000	200	250	0.12	1200	X027a
IXFL 60N80P		40	0.15	18000	250	250	0.20	625	X022a
IXFX 44N80P		44	0.19	12000	198	250	0.12	1200	X015a
IXFK 44N80P		44	0.19	12000	198	250	0.12	1200	X020a
IXFN 60N80P		53	0.14	18000	250	250	0.12	1040	X027a
IXFB 60N80P		60	0.14	18000	250	250	0.10	1250	X021a
IXFR 18N90P	900	10.5	0.66	5230	97	300	0.62	200	X016a
IXFV 12N90P		12	0.9	3080	56	300	0.33	380	X009a
IXFH 12N90P		12	0.9	3080	56	300	0.33	380	X014a
IXFR 24N90P		13	0.46	7200	130	300	0.54	230	X016a
IXFV 18N90P		18	0.6	5230	97	300	0.23	540	X009a
IXFH 18N90P		18	0.6	5230	97	300	0.23	540	X014a
IXFT 18N90P		18	0.6	5230	97	300	0.23	540	X019
IXFR 40N90P		21	0.23	14000	230	300	0.42	300	X016a
IXFH 24N90P		24	0.42	7200	130	300	0.19	660	X014a
IXFT 24N90P		24	0.42	7200	130	300	0.19	660	X019
IXFK 32N90P		32	0.3	10600	215	300	0.13	960	X020a

Package style
Outline drawings on pages O-30...O-55

X005a **TO-220AB**

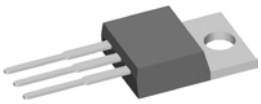

X009a **PLUS220**

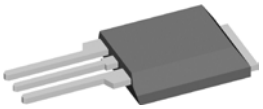

X010a **ISOPLUS220™**

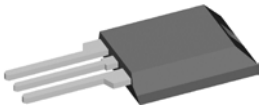

X011b **TO-263AB**

X014a **TO-247AD**

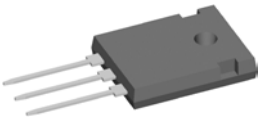

X015a **PLUS247**

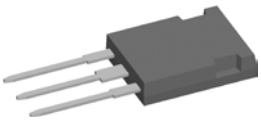

X016a **ISOPLUS247™**

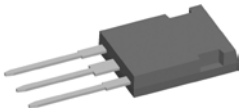

X017a **TO-3P**

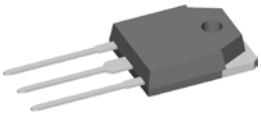

X027a **SOT-227B miniBLOC**

X019 **TO-268AA**

X020a **TO-264**

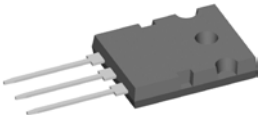

X021a **PLUS264**

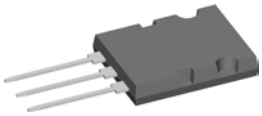

X022a **ISOPLUS264™**

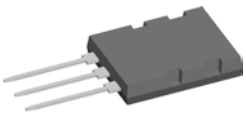

Polar™ HiPerFETs with Fast Intrinsic Diode

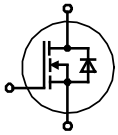

Part Type	V_{DSS} V	$I_{D(cont)}$ Chip $T_C = 25°C$ A	$R_{DS(on)}$ $T_J = 25°C$ Ω	C_{iss} typ pF	Q_g typ nC	t_{rr} typ ns	R_{thJC} K/W	P_D W	Fig. No.	Package style Outline drawings on pages O-30...O-55
IXFX 32N90P	900	32	0.3	10600	215	300	0.13	960	X015a	X005a TO-220AB
IXFN 40N90P		33	0.21	14000	230	300	0.18	695	X027a	
IXFX 40N90P		40	0.21	14000	230	300	0.13	960	X015a	
IXFK 40N90P		40	0.21	14000	230	300	0.13	960	X020a	
IXFN 52N90P		43	0.16	19000	308	300	0.14	890	X027a	X007a TO-220FPAB
IXFB 52N90P		52	0.16	19000	308	300	0.10	1250	X021a	
IXFN 56N90P		56	0.145	23000	375	300	0.125	1000	X027a	
IXFP 05N100M	1000	0.7	17	260	7.8	300	5.00	25	X007a	
IXFP 4N100PM		2.5	3.3	1456	26	300	2.20	57	X007a	
IXFP 4N100P		4	3.3	1456	26	300	0.83	150	X005a	X009a PLUS220
IXFA 4N100P		4	3.3	1456	26	300	0.83	150	X011b	
IXFP 5N100P		5	2.8	1830	33.4	200	0.50	250	X005a	
IXFH 5N100P		5	2.8	1830	33.4	200	0.50	250	X014a	
IXFA 5N100P		5	2.8	1830	33.4	200	0.50	250	X011b	X011b TO-263AB
IXFA 7N100P		7	1.9	2590	47	300	0.42	300	X011b	
IXFH 7N100P		7	1.9	2590	47	300	0.42	300	X014a	
IXFP 7N100P		7	1.9	2590	47	300	0.42	300	X005a	
IXFV 10N100P		10	1.4	3030	58	300	0.33	380	X009a	X014a TO-247AD
IXFH 10N100P		10	1.4	3030	56	300	0.33	380	X014a	
IXFR20N100P		11	0.64	7300	126	300	0.54	230	X016a	
IXFV 12N100P		12	1.05	4080	80	300	0.27	463	X009a	
IXFH 12N100P		12	1.05	4080	80	300	0.27	463	X014a	
IXFR 26N100P		15	0.43	11900	197	300	0.43	290	X016a	X015a X016a PLUS247 ISOPLUS247™
IXFV 15N100P		15	0.76	5140	97	300	0.23	543	X009a	
IXFH 15N100P		15	0.76	5140	97	300	0.23	543	X014a	
IXFR 32N100P		18	0.34	14200	225	300	0.39	320	X016a	
IXFH 20N100P		20	0.57	7300	126	300	0.19	660	X014a	
IXFT 20N100P		20	0.57	7300	126	300	0.19	660	X019	X019 TO-268AA
IXFL 44N100P		22	0.24	19000	305	300	0.35	357	X022e	
IXFN 26N100P		23	0.39	11900	197	300	0.21	595	X027a	
IXFX 26N100P		26	0.39	11900	197	300	0.16	780	X015a	
IXFK 26N100P		26	0.39	11900	197	300	0.16	780	X020a	
IXFN 32N100P		27	0.32	14200	225	300	0.18	690	X027a	X020a TO-264
IXFL38N100P		29	0.23	24000	350	300	0.24	520	X022e	
IXFX 32N100P		32	0.32	14200	225	300	0.13	960	X015a	
IXFK 32N100P		32	0.32	14200	225	300	0.13	960	X020a	
IXFN 44N100P		37	0.22	19000	305	300	0.14	890	X027a	X021a X022a PLUS264 ISOPLUS264™
IXFN 38N100P		38	0.21	24000	350	300	0.125	1000	X027a	
IXFB 44N100P		44	0.22	19000	305	300	0.10	1250	X021a	
IXFL 40N110P	1100	21	0.28	19000	310	300	0.35	357	X022e	
IXFL 36N110P		26	0.26	23000	350	300	0.24	520	X022e	
IXFN 40N110P		34	0.26	19000	310	300	0.14	890	X027a	X022e ISOPLUS264/i5-pac
IXFB 40N110P		40	0.26	19000	310	300	0.10	1250	X021a	
IXFP 6N120P	1200	6	2.4	2830	92	300	0.50	250	X005a	
IXFH 6N120P		6	2.4	2830	92	300	0.50	250	X014a	
IXFA 6N120P		6	2.4	2830	92	300	0.50	250	X011b	
IXFR 16N120P		9	1.04	6900	120	300	0.54	230	X016a	X027a SOT-227B miniBLOC
IXFV 12N120P		12	1.35	6500	103	300	0.23	543	X009a	
IXFH 12N120P		12	1.35	5400	103	300	0.23	543	X014a	
IXFR 20N120P		13	0.63	12900	193	300	0.43	290	X016a	
IXFR 26N120P		15	0.5	14000	225	300	0.39	320	X016a	
IXFH 16N120P		16	0.95	6900	120	300	0.19	660	X014a	

Polar™ HiPerFETs with Fast Intrinsic Diode

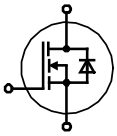

Part Type	V_{DSS} V	$I_{D(cont)}$ Chip $T_C = 25°C$ A	$R_{DS(on)}$ $T_J = 25°C$ Ω	C_{iss} typ pF	Q_g typ nC	t_{rr} typ ns	R_{thJC} K/W	P_D W	Fig. No.	Package style Outline drawings on pages O-30...O-55
IXFT 16N120P	1200	16	0.95	6900	120	300	0.19	660	X019	
IXFL 30N120P		18	0.38	19000	310	300	0.35	357	X022e	
IXFX 20N120P		20	0.57	11100	193	300	0.16	780	X015a	
IXFN 20N120P		20	0.57	11100	193	300	0.21	595	X027a	
IXFK 20N120P		20	0.57	11100	193	300	0.16	780	X020a	
IXFN 26N120P		23	0.46	14000	225	300	0.18	695	X027a	
IXFL 32N120P		24	0.34	21000	360	300	0.24	520	X022e	
IXFX 26N120P		26	0.46	14000	225	300	0.13	960	X015a	
IXFK 26N120P		26	0.46	14000	225	300	0.13	960	X020a	
IXFB 30N120P		30	0.35	22500	310	300	0.10	1250	X021a	
IXFN 30N120P		30	0.35	19000	310	300	0.14	890	X027a	
IXFN 32N120P		32	0.31	21000	360	300	0.125	1000	X027a	

X014a **TO-247AD**

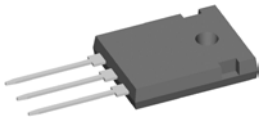

X015a **PLUS247**

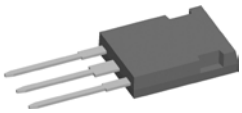

X019 **TO-268AA**

X021a **PLUS264**

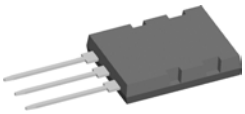

X020a **TO-264**

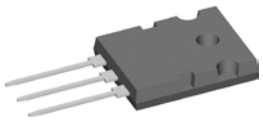

X022e **ISOPLUS264™ / i5-Pak**

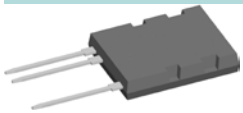

X027a **SOT-227B miniBLOC**

PolarP2™ Power MOSFETs

Part Type	V_{DSS} V	$I_{D(cont)}$ Chip $T_C = 25°C$ A	$R_{DS(on)}$ $T_J = 25°C$ Ω	C_{iss} typ. pF	Q_g typ. nC	t_{rr} typ. ns	R_{thJC} K/W	P_D W	Fig. No.
PolarP2™ Standard Power MOSFETs									
IXTH 450P2	500	16	0.33	2530	43	400	0.42	300	X014a
IXTP 450P2		16	0.33	2530	43	400	0.42	300	X005a
IXTQ 450P2		16	0.33	2530	43	400	0.42	300	X017a
IXTA 460P2		24	0.27	2890	48	400	0.26	480	X011b
IXTH 460P2		24	0.27	2890	48	400	0.26	480	X014a
IXTP 460P2		24	0.27	2890	48	400	0.26	480	X005a
IXTQ 460P2		24	0.27	2890	48	400	0.26	480	X017a
IXTQ 470P2		42	0.145	5400	88	400	0.15	830	X017a
IXTQ 480P2		52	0.12	6800	108	400	0.13	960	X017a
PolarP2™ HiPerFETs with Fast Intrinsic Diode									
IXFQ 24N50P2	500	24	0.27	2890	48	200	0.26	480	X017a
IXFH 42N50P2		42	0.145	5300	92	250	0.15	830	X014a
IXFT 42N50P2		42	0.145	5300	92	250	0.15	830	X019
IXFH 52N50P2		52	0.12	6800	113	250	0.13	960	X014a
IXFT 52N50P2		52	0.12	6800	113	250	0.13	960	X019
IXFK 74N50P2		74	0.077	9900	165	250	0.089	1400	X020a
IXFX 74N50P2		74	0.077	9900	165	250	0.089	1400	X015a
IXFK 94N50P2		94	0.055	14200	228	250	0.096	1300	X020a
IXFX 94N50P2		94	0.055	14200	228	250	0.096	1300	X015a
IXFB 120N50P2		120	0.043	19000	300	300	0.066	1890	X021a

Package style
Outline drawings on pages O-30...O-55

X004 **TO-252AA**

X005a **TO-220AB**

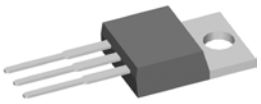

X007a **TO-220FPAB**

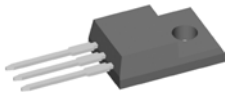

X011b **TO-263AB**

X014a **TO-247AD**

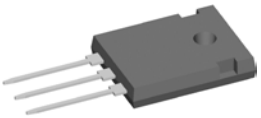

X015a **PLUS247**

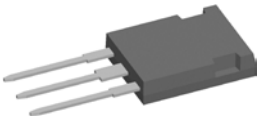

X017a **TO-3P**

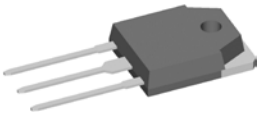

X019 **TO-268AA**

X020a **TO-264**

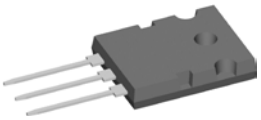

X021a **PLUS264**

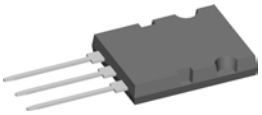

X022a **ISOPLUS264™**

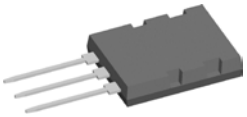

X027a **SOT-227B miniBLOC**

PolarP3™ HiPerFETs

Part Type	V_{DSS} V	$I_{D(cont)}$ Chip $T_C = 25°C$ A	$R_{DS(on)}$ $T_J = 25°C$ Ω	C_{iss} typ. pF	Q_g typ. nC	t_{rr} typ. ns	R_{thJC} K/W	P_D W	Fig. No.
IXFH 94N30P3	300	94	0.036	5510	102	250	0.12	1040	X014a
IXFQ 94N30P3		94	0.036	5510	102	250	0.12	1040	X017a
IXFT 94N30P3		94	0.036	5510	102	250	0.12	1040	X019
IXFL 210N30P3		108	0.016	16200	268	250	0.24	520	X022a
IXFK 120N30P3		120	0.027	8630	150	250	0.11	1130	X020a
IXFX 120N30P3		120	0.027	8630	150	250	0.11	1130	X015a
IXFK 150N30P3		150	0.019	12100	197	250	0.096	1300	X020a
IXFX 150N30P3		150	0.019	12100	197	250	0.096	1300	X015a
IXFN 210N30P3		192	0.0145	16200	268	250	0.083	1500	X027a
IXFB 210N30P3		210	0.0145	16200	268	250	0.066	1890	X021a
IXFA 5N50P3	500	5	1.65	370	6.9	250	1.10	114	X011b
IXFP 5N50P3		5	1.65	370	6.9	250	1.10	114	X005a
IXFY 5N50P3		5	1.65	370	6.9	250	1.10	114	X004
IXFA 8N50P3		8	0.8	705	13	250	0.69	180	X011b
IXFP 20N50P3M		8	0.3	1800	36	250	2.15	58	X007a
IXFP 8N50P3		8	0.8	705	13	250	0.69	180	X005a
IXFA 16N50P3		16	0.36	1515	29	250	0.38	330	X011b
IXFH 16N50P3		16	0.36	1515	29	250	0.38	330	X014a

PolarP3™ HiPerFETs

Part Type	V_{DSS} V	$I_{D(cont)}$ Chip $T_C = 25°C$ A	$R_{DS(on)}$ $T_J = 25°C$ Ω	C_{iss} typ. pF	Q_g typ. nC	t_{rr} typ. ns	R_{thJC} K/W	P_D W	Fig. No.
IXFP 16N50P3	500	16	0.36	1515	29	250	0.38	330	X005a
IXFA 20N50P3		20	0.3	1800	36	250	0.36	380	X011b
IXFH 20N50P3		20	0.3	1800	36	250	0.36	380	X014a
IXFP 20N50P3		20	0.3	1800	36	250	0.36	380	X005a
IXFQ 20N50P3		20	0.3	1800	36	250	0.36	380	X017a
IXFA 26N50P3		26	0.23	2220	42	250	0.25	500	X011b
IXFH 26N50P3		26	0.23	2220	42	250	0.25	500	X014a
IXFP 26N50P3		26	0.23	2220	42	250	0.25	500	X005a
IXFQ 26N50P3		26	0.23	2220	42	250	0.25	500	X017a
IXFH 34N50P3		34	0.17	3260	60	250	0.18	695	X014a
IXFQ 34N50P3		34	0.17	3260	60	250	0.18	695	X017a
IXFH 50N50P3		50	0.12	4335	85	250	0.13	960	X014a
IXFQ 50N50P3		50	0.12	4335	85	250	0.13	960	X017a
IXFT 50N50P3		50	0.12	4335	85	250	0.13	960	X019
IXFH 60N50P3		60	0.1	6250	96	250	0.12	1040	X014a
IXFQ 60N50P3		60	0.1	6250	96	250	0.12	1040	X017a
IXFT 60N50P3		60	0.1	6250	96	250	0.12	1040	X019
IXFL 132N50P3		63	0.043	18600	250	250	0.24	520	X022a
IXFK 78N50P3		78	0.068	9900	147	250	0.11	1130	X020a
IXFX 78N50P3		78	0.068	9900	147	250	0.11	1130	X015a
IXFK 98N50P3		98	0.05	13100	197	250	0.096	1300	X020a
IXFX 98N50P3		98	0.05	13100	197	250	0.096	1300	X015a
IXFN 132N50P3		112	0.039	18600	250	250	0.083	1500	X027a
IXFB 132N50P3		132	0.039	18600	250	250	0.066	1890	X021a
IXFA 4N60P3	600	4	2.2	365	6.9	250	1.10	114	X011b
IXFP 4N60P3		4	2.2	365	6.9	250	1.10	114	X005a
IXFY 4N60P3		4	2.2	365	6.9	250	1.10	114	X004
IXFA 7N60P3		7	1.15	705	13.3	250	0.69	180	X011b
IXFP 7N60P3		7	1.15	705	13.3	250	0.69	180	X005a
IXFA 14N60P3		14	0.54	1480	25	250	0.38	327	X011b
IXFH 14N60P3		14	0.54	1480	25	250	0.38	327	X014a
IXFP 14N60P3		14	0.54	1480	25	250	0.38	327	X005a
IXFA 16N60P3		16	0.44	1830	36	250	0.36	347	X011b
IXFH 16N60P3		16	0.44	1830	36	250	0.36	347	X014a
IXFP 16N60P3		16	0.44	1830	36	250	0.36	347	X005a
IXFA 22N60P3		22	0.36	2600	38	250	0.25	500	X011b
IXFH 22N60P3		22	0.36	2600	38	250	0.25	500	X014a
IXFP 22N60P3		22	0.36	2600	38	250	0.25	500	X005a
IXFQ 22N60P3		22	0.36	2600	38	250	0.25	500	X017a
IXFH 28N60P3		28	0.26	3560	50	250	0.18	695	X014a
IXFQ 28N60P3		28	0.26	3560	50	250	0.18	695	X017a
IXFH 42N60P3		42	0.185	5150	78	250	0.15	830	X014a
IXFR 80N60P3		48	0.076	13100	190	250	0.23	540	X016a
IXFH 50N60P3		50	0.145	6300	94	250	0.12	1040	X014a
IXFQ 50N60P3		50	0.145	6300	94	250	0.12	1040	X017a
IXFT 50N60P3		50	0.145	6300	94	250	0.12	1040	X019
IXFK 64N60P3		64	0.095	9900	145	250	0.11	1130	X020a
IXFX 64N60P3		64	0.095	9900	145	250	0.11	1130	X015a
IXFK 80N60P3		80	0.07	13100	190	250	0.096	1300	X020a
IXFX 80N60P3		80	0.07	13100	190	250	0.096	1300	X015a
IXFN 110N60P3		90	0.056	18000	245	250	0.083	1500	X027a
IXFB 110N60P3		110	0.056	18000	245	250	0.066	1890	X021a

Package style
Outline drawings on pages O-30...O-55

X004 **TO-252AA**

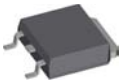

X005a **TO-220AB**

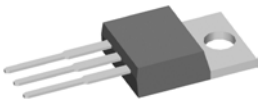

X011b **TO-263AB**

X014a **TO-247AD**

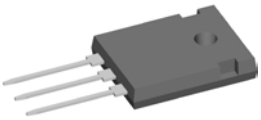

X015a **PLUS247**

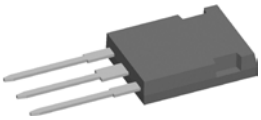

X016a **ISOPLUS247™**

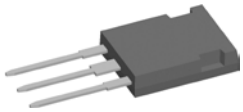

X017a **TO-3P**

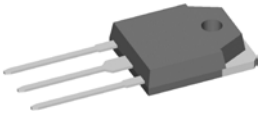

X019 **TO-268AA**

X020a **TO-264**

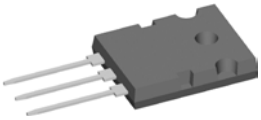

X021a **PLUS264**

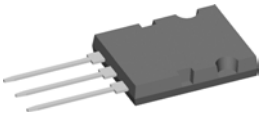

X022a **ISOPLUS264™**

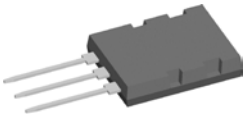

X027a **SOT-227B miniBLOC**

Legacy (Standard) Power MOSFETs

Part Type	V_{DSS} V	$I_{D(cont)}$ Chip $T_C = 25°C$ A	$R_{DS(on)}$ $T_J = 25°C$ Ω	C_{iss} typ. pF	Q_g typ. nC	t_{rr} typ. ns	R_{thJC} K/W	P_D W	Fig. No.
IXTU 01N100	1000	0.1	80	60	8	1500	3	25	X003
IXTY 01N100		0.1	80	60	8	1500	3	25	X004
IXTP 05N100M		0.7	17	260	7.8	710	5	25	X007a
IXTP 05N100		0.75	17	260	7.8	710	3.1	40	X005a
IXTU 05N100		0.75	17	260	7.8	710	3.1	40	X003
IXTY 05N100		0.75	17	260	7.8	710	3.1	40	X004
IXTA 05N100		0.75	17	260	7.8	710	3.1	40	X011b
IXTP 1N100		1.5	11	480	23	710	2.3	54	X005a
IXTA 1N100		1.5	11	480	23	710	2.3	54	X011b
IXTP 2N100		2	7	825	18	800	1.25	100	X005a
IXTA 2N100		2	7	825	18	800	1.25	100	X011b
IXTX 24N100		24	0.4	8700	267	850	0.22	568	X015a
IXTP 3N120	1200	3	4.5	1050	39	700	0.62	200	X005a
IXTH 3N120		3	4.5	1050	39	700	0.8	100	X014a
IXTA 3N120		3	4.5	1050	39	700	0.62	200	X011b
IXTH 6N120		6	2.4	1950	56	850	0.42	300	X014a
IXTT 6N120		6	2.4	1950	56	850	0.42	300	X019
IXTH 3N150	1500	3	7.3	1375	38.6	900	0.5	250	X014a
IXTH 4N150		4	6	1576	44.5	900	0.45	280	X014a
IXTH 6N150		6	3.5	2230	67	1500	0.23	540	X014a

Outline drawings on pages O-30...O-55

X003 **TO-251AA**

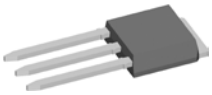

X004 **TO-252AA**

X005a **TO-220AB**

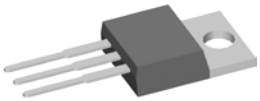

X007a **TO-220FPAB**

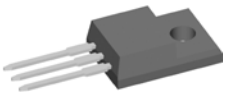

X011b **TO-263AB**

X014a **TO-247AD**

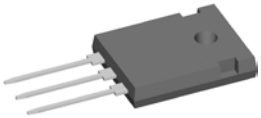

X015a **PLUS247**

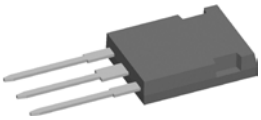

X019 **TO-268AA**

Extended FBSOA Linear Power MOSFETs

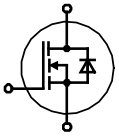

Part Type ➢ New	V_{DSS} V	$I_{D(cont)}$ Chip T_C = 25°C A	$R_{DS(on)}$ T_J = 25°C Ω	C_{iss} typ. pF	Q_g typ. nC	t_{rr} ns	R_{thJC} K/W	P_D W	Fig. No.	Package style Outline drawings on pages O-30...O-55
IXTH 75N10L2	100	75	0.021	8100	215	180	0.31	400	X014a	
IXTT 75N10L2		75	0.021	8100	215	180	0.31	400	X019	
IXTH 110N10L2		110	0.018	10500	260	230	0.21	600	X014a	X005a **TO-220AB**
IXTT 110N10L2		110	0.018	10500	260	230	0.21	600	X019	
IXTN 200N10L2		178	0.011	23000	540	245	0.15	830	X027a	
IXTX 200N10L2		200	0.011	23000	540	245	0.12	1040	X015a	
IXTK 200N10L2		200	0.011	23000	540	245	0.12	1040	X020a	
IXTH 60N20L2	200	60	0.045	10500	255	330	0.23	540	X014a	
IXTT 60N20L2		60	0.045	10500	255	330	0.23	540	X019	
IXTQ 60N20L2		60	0.045	10500	255	330	0.23	540	X017a	
IXTN 110N20L2		100	0.024	23000	500	420	0.17	735	X027a	X011b **TO-263AB**
IXTX 110N20L2		110	0.024	23000	500	420	0.13	960	X015a	
IXTK 110N20L2		110	0.024	23000	500	420	0.13	960	X020a	
IXTX 90N25L2	250	90	0.033	23000	640	266	0.13	960	X015a	
IXTN 90N25L2		90	0.033	23000	640	266	0.17	735	X027a	
IXTK 90N25L2		90	0.033	23000	640	266	0.13	960	X020a	
➢ **IXTA 15N50L2**	500	15	0.48	4080	123	570	0.42	300	X011b	
IXTP 15N50L2		15	0.48	4080	123	570	0.42	300	X005a	
IXTH 15N50L2		15	0.48	4080	123	570	0.42	300	X014a	X014a **TO-247AD**
IXTH 30N50L2		30	0.2	8100	240	500	0.31	400	X014a	
IXTT 30N50L2		30	0.2	8100	240	500	0.31	400	X019	
IXTQ 30N50L2		30	0.2	8100	240	500	0.31	400	X017a	
IXTH 40N50L2		40	0.17	10400	320	500	0.23	540	X014a	
IXTT 40N50L2		40	0.17	10400	320	500	0.23	540	X019	
IXTQ 40N50L2		40	0.17	10400	320	500	0.23	540	X017a	
IXTN 60N50L2		53	0.1	24000	610	980	0.17	735	X027a	X015a **PLUS247**
IXTX 60N50L2		60	0.1	24000	610	980	0.13	960	X015a	
IXTK 60N50L2		60	0.1	24000	610	980	0.13	960	X020a	
IXTH 30N60L2	600	30	0.24	10700	335	710	0.23	540	X014a	
IXTT 30N60L2		30	0.24	10700	335	710	0.23	540	X019	
IXTQ 30N60L2		30	0.24	10700	335	710	0.23	540	X017a	

X027a **SOT-227B miniBLOC**

X019 **TO-268AB**

X017a **TO-3P**

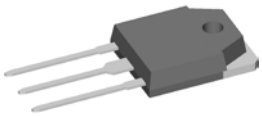

Depletion-Mode MOSFETs

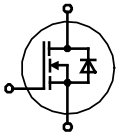

Part Type ➢ New	V_{DSS} V	$I_{D(cont)}$ Chip T_C = 25°C A	$R_{DS(on)}$ T_J = 25°C Ω	$V_{GS(off)}$ max. V	C_{iss} typ. pF	C_{rss} typ. pF	Q_g typ. nC	P_D W	Fig. No.	Package style Outline drawings on pages O-30...O-55
➢ **IXTH 16N10D2**	100	16	0.064	-4	5700	940	225	695	X014a	
IXTT 16N10D2		16	0.064	-4	5700	940	225	695	X019	X004 **TO-252AA**
IXTH 16N20D2	200	16	0.073	-4	5500	607	208	695	X014a	
IXTT 16N20D2		16	0.073	-4	5500	607	208	695	X019	
IXTP 08N50D2	500	0.8	4.6	-4	312	11	12.7	60	X005a	
IXTY 08N50D2		0.8	4.6	-4	312	11	12.7	60	X004	
IXTA 08N50D2		0.8	4.6	-4	312	11	12.7	60	X011b	
IXTP 1R6N50D2		1.6	2.3	-4	645	16.5	23.7	100	X005a	
IXTY 1R6N50D2		1.6	2.3	-4	645	16.5	23.7	100	X004	
IXTA 1R6N50D2		1.6	2.3	-4	645	16.5	23.7	100	X011b	
IXTP 3N50D2		3	1.5	-4	1070	24	40	125	X005a	
IXTA 3N50D2		3	1.5	-4	1070	24	40	125	X011b	X005a **TO-220AB**
IXTP 6N50D2		6	0.5	-4	2800	64	96	300	X005a	
IXTH 6N50D2		6	0.5	-4	2800	64	96	300	X014a	
IXTA 6N50D2		6	0.5	-4	2800	64	96	300	X011b	
IXTH 16N50D2		16	0.24	-4	5250	130	199	695	X014a	
IXTT 16N50D2		16	0.24	-4	5250	130	199	695	X019	
IXTP 08N100D2	1000	0.8	21	-4	325	6.5	14.6	60	X005a	
IXTY 08N100D2		0.8	21	-4	325	6.5	14.6	60	X004	
IXTA 08N100D2		0.8	21	-4	325	6.5	14.6	60	X011b	
IXTP 1R6N100D2		1.6	10	-4.5	645	11	27	100	X005a	
IXTY 1R6N100D2		1.6	10	-4.5	645	11	27	100	X004	
IXTA 1R6N100D2		1.6	10	-4.5	645	11	27	100	X011b	
IXTP 3N100D2		3	5.5	-4.5	1020	17	37.5	125	X005a	
IXTA 3N100D2		3	5.5	-4.5	1020	17	37.5	125	X011b	X011b **TO-263AB**
➢ **IXTA 3N100D2HV**		3	6	-4.5	1020	17	37.5	125	X011c	
IXTP 6N100D2		6	2.2	-4.5	2650	41	95	300	X005a	
IXTH 6N100D2		6	2.2	-4.5	2650	41	95	300	X014a	
IXTA 6N100D2		6	2.2	-4.5	2650	41	95	300	X011b	
➢ **IXTT 10N100D2**		10	1.5	-4.5	5320	70	200	695	X019	
➢ **IXTH 10N100D2**		10	1.5	-4.5	5320	70	200	695	X014a	
➢ **IXTT 2N170D2**	1700	2	6.5	-4	3650	80	110	568	X019	
➢ **IXTH 2N170D2**		2	6.5	-4	3650	80	110	568	X014a	

X019 **TO-268AA**

X014a **TO-247AD**

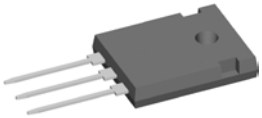

X011c **TO-263AB**

PolarP™ P-Channel Power MOSFETs

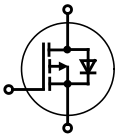

Part Type	V_{DSS} V	$I_{D(cont)}$ Chip $T_C = 25°C$ A	$R_{DS(on)}$ $T_J = 25°C$ Ω	C_{iss} typ. pF	Q_g typ. nC	t_{rr} typ. ns	R_{thJC} K/W	P_D W	Fig. No.	Package style Outline drawings on pages O-30...O-55
IXTX 32P60P	-600	-32	0.35	11100	196	480	0.14	890	X015a	X005a **TO-220AB**
IXTN 32P60P		-32	0.35	11100	196	480	0.14	890	X027a	
IXTK 32P60P		-32	0.35	11100	196	480	0.14	890	X020a	
IXTR 32P60P		-18	0.385	11100	196	480	0.4	310	X016a	
IXTH 16P60P		-16	0.72	5120	92	440	0.27	460	X005a	
IXTT 16P60P		-16	0.72	5120	92	440	0.27	460	X019	X010a **ISOPLUS220™**
IXTR 16P60P		-10	0.79	5120	92	440	0.66	190	X016a	
IXTX 40P50P	-500	-40	0.23	11.5	205	477	0.14	890	X015a	
IXTN 40P50P		-40	0.23	11500	205	477	0.14	890	X027a	
IXTK 40P50P		-40	0.23	11500	205	477	0.14	890	X020a	X011b **TO-263AB**
IXTR 40P50P		-22	0.26	11500	205	477	0.4	312	X016a	
IXTH 20P50P		-20	0.45	5120	103	406	0.27	460	X014a	
IXTT 20P50P		-20	0.45	5120	103	406	0.27	460	X019	
IXTR 20P50P		-13	0.49	5120	103	406	0.66	190	X016a	X014a **TO-247AD**
IXTP 10P50P		-10	1.00	2670	50	414	0.5	300	X005a	
IXTH 10P50P		-10	1.00	2670	50	414	0.5	300	X005a	
IXTA 10P50P		-10	1.00	2670	50	414	0.5	300	X011b	
IXTQ 10P50P		-10	1.00	2670	50	414	0.5	300	X017a	
IXTX 90P20P	-200	-90	0.044	12000	205	315	0.14	890	X015a	X015a **PLUS247**
IXTN 90P20P		-90	0.044	12000	205	315	0.14	890	X027a	
IXTK 90P20P		-90	0.044	12000	205	315	0.14	890	X020a	
IXTR 90P20P		-53	0.048	12000	205	315	0.4	312	X016a	
IXTH 48P20P		-48	0.085	5400	103	260	0.27	462	X014a	X016a **ISOPLUS247™**
IXTT 48P20P		-48	0.085	5400	103	260	0.27	462	X019	
IXTR 48P20P		-30	0.093	5400	103	260	0.66	190	X016a	
IXTP 26P20P		-26	0.17	2740	56	240	0.42	300	X005a	
IXTH 26P20P		-26	0.17	2740	56	240	0.42	300	X014a	X017a **TO-3P**
IXTA 26P20P		-26	0.17	2740	56	240	0.42	300	X011b	
IXTQ 26P20P		-26	0.17	2740	56	240	0.42	300	X017a	
IXTP 36P15P	-150	-36	0.11	3100	55	228	0.42	300	X005a	
IXTH 36P15P		-36	0.11	3100	55	228	0.42	300	X014a	
IXTA 36P15P		-36	0.11	3100	55	228	0.42	300	X011b	X019 **TO-268AA**
IXTQ 36P15P		-36	0.11	3100	55	228	0.42	300	X017a	
IXTC 36P15P		-22	0.12	2950	55	150	1	150	X010a	
IXTR 36P15P		-22	0.12	2950	55	150	1	150	X016a	
IXTX 170P10P	-100	-170	0.012	12600	240	176	0.14	890	X015a	X020a **TO-264**
IXTN 170P10P		-170	0.012	12600	240	176	0.14	890	X027a	
IXTK 170P10P		-170	0.012	12600	240	176	0.14	890	X020a	
IXTR 170P10P		-108	0.013	12600	240	176	0.4	312	X016a	
IXTH 90P10P		-90	0.025	5800	120	144	0.27	462	X014a	
IXTT 90P10P		-90	0.025	5800	120	144	0.27	462	X019	X027a **SOT-227B miniBLOC**
IXTR 90P10P		-57	0.027	5800	120	144	0.66	190	X016a	
IXTP 52P10P		-52	0.05	2845	60	120	0.42	300	X005a	
IXTH 52P10P		-52	0.05	2845	60	120	0.42	300	X014a	
IXTA 52P10P		-52	0.05	2845	60	120	0.42	300	X011b	
IXTQ 52P10P		-52	0.05	2845	60	120	0.42	300	X017a	

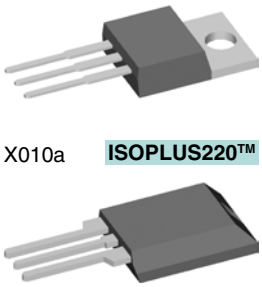

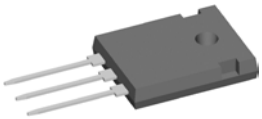

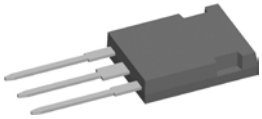

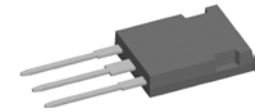

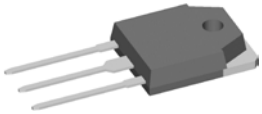

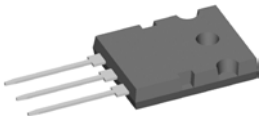

TrenchP™ P-Channel MOSFETs

Part Type ➢ New	V_{DSS} V	$I_{D(cont)}$ Chip T_C = 25°C A	$R_{DS(on)}$ T_J = 25°C Ω	C_{iss} typ. pF	Q_g typ. nC	t_{rr} typ. (*max) ns	R_{thJC} K/W	P_D W	Fig. No.	Package style Outline drawings on pages O-30...O-55
IXTK 120P20T	-200	-120	0.03	73000	740	*300	0.12	1040	X020a	X004 **TO-252AA**
IXTX 120P20T		-120	0.03	73000	740	*301	0.12	1040	X015a	
IXTN 120P20T		-106	0.03	73000	740	*302	0.15	830	X027a	
IXTR 120P20T		-90	0.032	73000	740	*303	0.21	595	X016a	
IXTH 68P20T		-68	0.055	33400	380	245	0.22	568	X014a	X005a **TO-220AB**
IXTT 68P20T		-68	0.055	33400	380	245	0.22	568	X019	
IXTR 68P20T		-44	0.064	33400	380	245	0.46	270	X016a	
IXTA 32P20T		-32	0.13	14500	185	190	0.42	300	X011b	
IXTP 32P20T		-32	0.13	14500	185	190	0.42	300	X005a	
IXTH 32P20T		-32	0.13	14500	185	190	0.42	300	X014a	X011b **TO-263AB**
IXTQ 32P20T		-32	0.13	14500	185	190	0.42	300	X017a	
IXTP 44P15T	-150	-44	0.065	13400	175	140	0.42	298	X005a	
IXTH 44P15T		-44	0.065	13400	175	140	0.42	298	X014a	
IXTA 44P15T		-44	0.065	13400	175	140	0.42	298	X011b	
IXTQ 44P15T		-44	0.065	13400	175	140	0.42	298	X017a	X014a **TO-247AD**
IXTP 15P15T		-15	0.24	3650	48	116	0.83	150	X005a	
IXTY 15P15T		-15	0.24	3650	48	116	0.83	150	X004	
IXTA 15P15T		-15	0.24	3650	48	116	0.83	150	X011b	
IXTP 10P15T		-10	0.35	2210	36	120	1.5	83	X005a	
IXTY 10P15T		-10	0.35	2210	36	120	1.5	83	X004	X015a **PLUS247**
IXTA 10P15T		-10	0.35	2210	36	120	1.5	83	X011b	
IXTK 210P10T	-100	-210	0.0075	69500	740	*200	0.12	1040	X020a	
IXTN 210P10T		-210	0.0075	69500	740	*201	0.15	830	X027a	
IXTX 210P10T		-210	0.0075	69500	740	*202	0.12	1040	X015a	
IXTR 210P10T		-158	0.008	69500	740	*203	0.32	390	X016a	
IXTH 140P10T		-140	0.012	31400	400	130	0.22	568	X014a	X016a **ISOPLUS247™**
IXTT 140P10T		-140	0.012	31400	400	130	0.22	568	X019	
IXTR 140P10T		-90	0.013	31400	400	130	0.46	270	X016a	
IXTP 76P10T		-76	0.025	13700	197	70	0.42	298	X005a	
IXTH 76P10T		-76	0.025	13700	197	70	0.42	298	X014a	
IXTA 76P10T		-76	0.025	13700	197	70	0.42	298	X011b	X017a **TO-3P**
IXTP 26P10T		-26	0.09	3820	52	70	0.83	150	X005a	
IXTY 26P10T		-26	0.09	3820	52	70	0.83	150	X004	
IXTA 26P10T		-26	0.09	3820	52	70	0.83	150	X011b	
IXTP 18P10T		-18	0.12	2100	39	62	1.5	83	X005a	
IXTY 18P10T		-18	0.12	2100	39	62	1.5	83	X004	X019 **TO-268AA**
IXTA 18P10T		-18	0.12	2100	39	62	1.5	83	X011b	
IXTP 96P085T	-85	-96	0.013	13100	180	55	0.42	298	X005a	
IXTH 96P085T		-96	0.013	13100	180	55	0.42	298	X014a	
IXTA 96P085T		-96	0.013	13100	180	55	0.42	298	X011b	
IXTP 24P085T		-24	0.065	2090	41	40	1.5	83	X005a	
IXTA 24P085T		-24	0.065	2090	41	40	1.5	83	X011b	X020a **TO-264**
IXTP 120P065T	-65	-120	0.01	13200	185	53	0.42	298	X005a	
IXTH 120P065T		-120	0.01	13200	185	53	0.42	298	X014a	
IXTA 120P065T		-120	0.01	13200	185	53	0.42	298	X011b	
IXTP 28P065T		-28	0.045	2030	46	31	1.5	83	X005a	
IXTA 28P065T		-28	0.045	2030	46	31	1.5	83	X011b	
IXTP 140P05T	-50	-140	0.009	13500	200	53	0.42	298	X005a	X027a **SOT-227B miniBLOC**
IXTH 140P05T		-140	0.009	13500	200	53	0.42	298	X014a	
IXTA 140P05T		-140	0.009	13500	200	53	0.42	298	X011b	
IXTP 48P05T		-48	0.03	3660	53	30	0.83	150	X005a	
IXTY 48P05T		-48	0.03	3660	53	30	0.83	150	X004	
IXTA 48P05T		-48	0.03	3660	53	30	0.83	150	X011b	
IXTP 32P05T		-32	0.039	1975	46	26	1.5	83	X005a	
IXTY 32P05T		-32	0.039	1975	46	26	1.5	83	X004	
IXTA 32P05T		-32	0.039	1975	46	26	1.5	83	X011b	

Q3-Class HiPerFET™ Power MOSFETs

Part Type ➢ New	V_{DSS} V	$I_{D(cont)}$ Chip T_C = 25°C A	$R_{DS(on)}$ T_J = 25°C Ω	C_{iss} typ. pF	Q_g typ. nC	t_{rr} typ. ns	R_{thJC} K/W	P_D W	Fig. No.
IXFH 70N20Q3	200	70	0.04	3150	67	250	0.18	690	X014a
IXFT 70N20Q3		70	0.04	3150	67	250	0.18	690	X019
IXFH 50N30Q3		50	0.08	3160	65	250	0.18	690	X014a
IXFT 50N30Q3		50	0.08	3160	65	250	0.18	690	X019
IXFT 70N30Q3		70	0.054	4735	98	250	0.15	830	X019
IXFH 70N30Q3		70	0.054	4735	98	250	0.15	830	X014a
IXFR 44N50Q3	500	25	0.154	4800	93	250	0.41	300	X016a
IXFT 30N50Q3		30	0.2	3200	62	250	0.18	690	X019
IXFH 30N50Q3		30	0.2	3200	62	250	0.18	690	X014a
IXFH 44N50Q3		44	0.14	4800	93	250	0.15	830	X014a
IXFT 44N50Q3		44	0.14	4800	93	250	0.15	830	X019
IXFR 64N50Q3		45	0.094	6950	145	250	0.25	500	X016a
IXFR 80N50Q3		50	0.072	10000	200	250	0.22	570	X016a
IXFN 80N50Q3		63	0.065	10000	200	250	0.16	780	X027a
IXFK 64N50Q3		64	0.085	6950	145	250	0.125	1000	X020a
IXFX 64N50Q3		64	0.085	6950	145	250	0.125	1000	X015a
IXFX 80N50Q3		80	0.065	10000	200	250	0.10	1250	X015a
IXFK 80N50Q3		80	0.065	10000	200	250	0.10	1250	X020a
IXFN 100N50Q3		82	0.049	13800	255	250	0.13	960	X027a
IXFB 100N50Q3		100	0.049	13800	255	250	0.08	1560	X021a
IXFR 48N60Q3	600	32	0.154	7020	140	300	0.25	500	X016a
IXFR 64N60Q3		42	0.104	9930	190	300	0.22	568	X016a
IXFK 48N60Q3		48	0.14	7020	140	300	0.125	1000	X020a
IXFX 48N60Q3		48	0.14	7020	140	300	0.125	1000	X015a
IXFK 64N60Q3		64	0.095	9930	190	300	0.10	1250	X020a
IXFX 64N60Q3		64	0.095	9930	190	300	0.10	1250	X015a
IXFN 82N60Q3		66	0.075	13500	275	300	0.13	960	X027a
IXFB 82N60Q3		82	0.075	13500	275	300	0.08	1560	X021a
IXFR 32N80Q3	800	24	0.3	6940	140	300	0.25	500	X016a
IXFK 32N80Q3		32	0.27	6940	140	300	0.125	1000	X020a
IXFX 32N80Q3		32	0.27	6940	140	300	0.125	1000	X015a
IXFN 44N80Q3		37	0.19	10950	185	300	0.16	780	X027a
IXFX 44N80Q3		44	0.19	10950	185	300	0.10	1250	X015a
IXFK 44N80Q3		44	0.19	10950	185	300	0.10	1250	X020a
IXFN 62N80Q3		49	0.14	13600	270	300	0.13	960	X027a
IXFB 62N80Q3		62	0.14	13600	270	300	0.08	1560	X021a
IXFR 15N100Q3	1000	10	1.2	3250	64	250	0.31	400	X016a
IXFT 15N100Q3		15	1.05	3250	64	250	0.18	690	X019
IXFH 15N100Q3		15	1.05	3250	64	250	0.18	690	X014a
IXFH 18N100Q3		18	0.66	4890	90	300	0.15	830	X014a
IXFT 18N100Q3		18	0.66	4890	90	300	0.15	830	X019
IXFR 24N100Q3		18	0.49	7200	140	300	0.25	500	X016a
IXFR 32N100Q3		23	0.35	10900	195	300	0.22	570	X016a
IXFK 24N100Q3		24	0.44	7200	140	300	0.125	1000	X020a
IXFX 24N100Q3		24	0.44	7200	140	300	0.125	1000	X015a
IXFN 32N100Q3		28	0.32	10900	195	300	0.16	780	X027a
IXFK 32N100Q3		32	0.32	10900	195	250	0.10	1250	X020a
IXFX 32N100Q3		32	0.32	10900	195	250	0.10	1250	X015a
IXFN 44N100Q3		38	0.22	13600	264	300	0.13	960	X027a
IXFB 44N100Q3		44	0.22	13600	264	300	0.08	1560	X021a

Package style
Outline drawings
on pages O-30...O-55

X014a **TO-247AD**

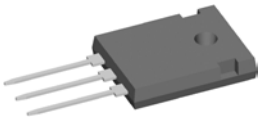

X015a **PLUS247**

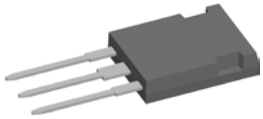

X016a **ISOPLUS247™**

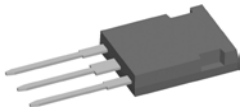

X019 **TO-268AA**

X020a **TO-264**

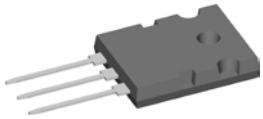

X021a **PLUS264**

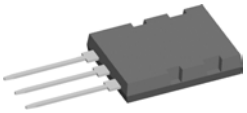

X027a **SOT-227B miniBLOC**

Very High Voltage Power MOSFETs (2.5 - 4 kV)

Part Type ➢ New	V_{DSS} V	$I_{D(cont)}$ Chip T_C = 25°C A	$R_{DS(on)}$ T_J = 25°C Ω	C_{iss} typ. pF	Q_g typ. nC	t_{rr} typ. ns	R_{thJC} K/W	P_D W	Fig. No.
IXTA 02N250	2500	0.2	450	116	7.4	1500	1.50	83	X011b
IXTH 02N250		0.2	450	116	7.4	1500	1.50	83	X014a
IXTF 1N250		1.0	40	1660	41	2500	1.13	110	X024c
IXTH 1N250		1.5	40	1660	41	2500	0.50	250	X014a
IXTT 1N250HV		1.5	40	1660	41	2500	0.50	250	X019a
IXTK 5N250		5.0	8.8	8560	200	1200	0.13	960	X020a
IXTN 5N250		5.0	8.8	8560	200	1200	0.18	700	X027a
IXTX 5N250		5.0	8.8	8560	200	1200	0.13	960	X015a
IXTT 02N450HV	4500	0.2	750	256	10.4	1600	1.10	113	X019a
IXTA 02N450HV		0.2	750	256	10.4	1600	1.10	113	X011c
IXTF 02N450		0.2	750	256	10.4	1600	1.60	78	X024c
IXTF 1N450		0.9	85	1730	40	1750	0.77	165	X024c
IXTT 1N450HV		1.0	85	1730	40	1750	0.24	520	X019a
IXTL 2N450		2.0	23	6900	156	1750	0.56	220	X022e

Outline drawings
on pages O-30...O-55

X011b **TO-263**

X011c **TO-263**

X020a **TO-264**

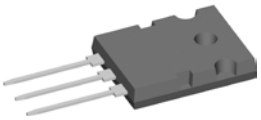

X014a **TO-247AD**

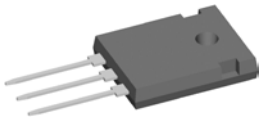

X015a **PLUS247**

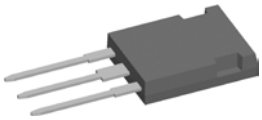

X019 **TO-268AA**

X022e **ISOPLUS264™ / i5-Pak**

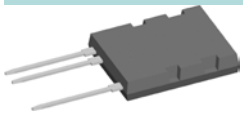

X024c **ISOPLUS i4-PAC™**

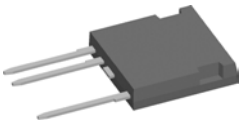

X027a **SOT-227B miniBLOC**

CoolMOS™ Power MOSFETs

CoolMOS™ is a trademark of Infineon Technologies

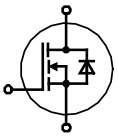

K Series - CoolMOS™

Part Type ○ Not for new design ➢ New	V_{DSS} V	I_{D25} T_C = 25°C A	$R_{DS(on)}$ T_J = 25°C Ω	Q_g typ. nC	R_{thJC} K/W	V_{ISOL} RMS V	Fig. No.
C3 Series							
IXKC 20N60C	600	14	0.19	80	1.00	2500	X010a
○ IXKC 40N60C		24	0.096	160	0.50	2500	X010a
IXKR 40N60C		38	0.07	250	0.45	2500	X016a
IXKN 40N60C		40	0.07	250	0.43	2500	X027a
IXKH 47N60C		47	0.07	250	0.30	-	X014a
IXKN 75N60C		75	0.036	500	0.22	2500	X027a
IXKK 85N60C		85	0.036	540	0.18	-	X020a
IXKC 13N80C	800	13	0.29	85	0.96	2500	X010a
○ IXKC 25N80C		20	0.15	180	0.90	2500	X010a
IXKR 25N80C		25	0.15	170	0.50	2500	X016a
IXKN 45N80C		44	0.074	335	0.33	2500	X027a
C5 Series							
IXKP 10N60C5	600	10	0.385	17	1.15	-	X005a
○ IXKP 13N60C5M		6.5	0.3	22	3.85	-	X007a
○ IXKP 20N60C5		20	0.2	32	0.60	-	X005a
○ IXKH 20N60C5		20	0.2	32	0.60	-	X014a
○ IXKC 15N60C5		15	0.165	40	1.10	2500	X010a
○ IXKP 24N60C5		24	0.165	40	0.50	-	X005a
○ IXKP 24N60C5M		8.5	0.165	40	3.65	-	X007a
○ IXKH 24N60C5		24	0.165	40	0.50	-	X014a
○ IXKH 30N60C5		30	0.125	53	0.40		X014a
IXKH 35N60C5		35	0.1	60	0.35	-	X014a
IXKR 47N60C5		47	0.045	150	0.45	2500	X016a
IXKH 70N60C5		70	0.045	150	0.20	-	X014a
IXKT 70N60C5		66	0.045	150	0.23	-	X019

CoolMOS™ Configurations in i4-PAC™

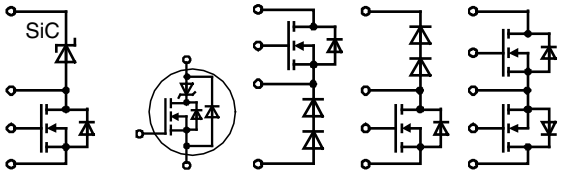

Part Type ✧ under development ➢ New	V_{DSS} V	I_{D25} T_C = 25°C A	$R_{DS(on)\ max.}$ T_J = 25°C Ω	Q_g typ. nC	R_{thJC} K/W	Config.	Fig. No.
IXKF 40N60SCD1	600	38	0.07	250	0.45	single	X024c
➢ IXKF 40N60SCH1		41	0.07	250	0.45	single	
✧ IXKF 40N60SCC1 [1]		41	0.07	250	0.45	single	
MKE 11R600DCGFC [1]	600	15	0.165	40	1.1	boost	X024a
FMD 15-06KC5		15	0.165	40	1.1	boost	
FMD 40-06KC		38	0.07	250	0.45	boost	
FMD 47-06KC5		47	0.045	150	0.45	boost	
FDM 15-06KC5	600	15	0.165	40	1.1	buck	
FDM 47-06KC5		47	0.045	150	0.45	buck	

[1] with SiC Boost Diode

Configuration in ISOPLUS264™ Package

LKK 47-06C5	600	2 x 47	0.045	150	0.45	dual	X022c

Package style
Outline drawings
on pages O-30...O-55

X005a **TO-220AB**

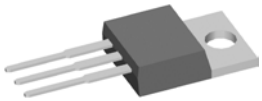

X009a **PLUS220**

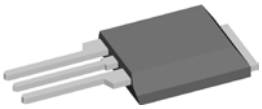

X010a **ISOPLUS220™**

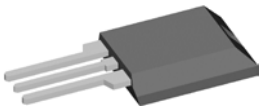

X013 **PLUS220SMD**

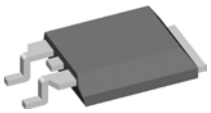

X014a **TO-247AD**

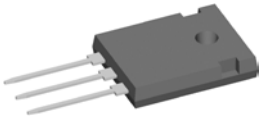

X016a **ISOPLUS247™**

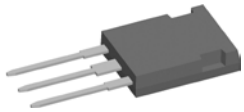

X020a **TO-264**

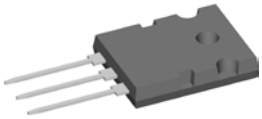

X022c **ISOPLUS264**

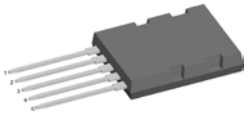

X024a **ISOPLUS i4-PAC™**

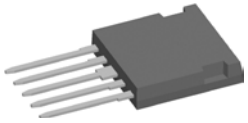

X024c **ISOPLUS i4-PAC™**

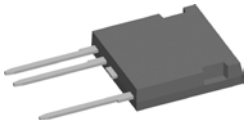

X027a **SOT-227B miniBLOC**

Trench MOSFET Technology

- very low R_{DSon}
- fast body diode

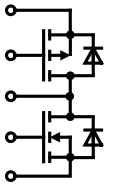
FMP Phase Leg

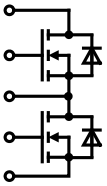
FMM Phase Leg

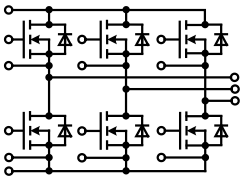
MTI...W... Six-Pack

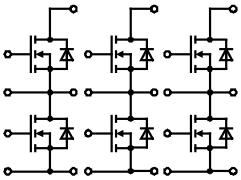
MTI...WX... / GMM Six-Pack

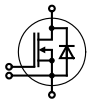
MMIX1T.../ MMIX1F... MTC with Temp. Sensor

Part Type ✧ under development ➢ new	V_{DSS} V	I_{D25} T_C = 25°C A	I_{D90} T_C = 90°C A	R_{DSon} typ. T_J = 25°C mΩ	C_{iss} typ nF	Q_g typ nC	R_{thJC} K/W	Fig. No.	Package style Outline drawings on pages O-30...O-55
Single high current Switch									
MMIX 1T600N04T2	40	600	440	1.3	40	590	0.18	X031a	
MMIX 1T550N055T2	55	550	405	1.3	40	595	0.18		X024a **ISOPLUS i4-PAC™**
MMIX 1F520N075T2	75	500	370	1.6	41	545	0.18		
Single high current Switch with NTC									
✧ **MTC 960X55TGD**	55	2x 640	2x 480	1.1	2x 40	2x 595	0.16	X026d	
✧ **MTC 840X75TGD**	75	2x 550	2x 420	1.3	2x 40	2x 545	0.16		
Phase Leg Configuration									
FMM 150-0075X2F	75	120	87	5.8	10.5	178	0.88	X024a	
➢ **FMP 76-010T** ①	±100	-54 / 62	-	24 / 11	40	20	0,95 / 1.4		
➢ **FMM 60-02TF**	200	33	-	40	46	42	1.0		
➢ **FMM 50-025TF**	550	30	-	50	25	25	1.0		X031a **SMPD-X**
① high side switch: p-channel; low side switch: n-channel									
Six-Pack Configuration									
➢ **MTI 200WX75GD**	75	265	200	1.1	10.8	155	0.85	X026d	
➢ **MTI 85W100GC**	100	110	83	3.2	6.3	90	1.45	X026c	
➢ **MTI 145WX100GD**	100	190	145	1.7	11	155	0.85	X026d	
GMM 3x60-015X2	150	50	38	19	5.8	97	1.00		

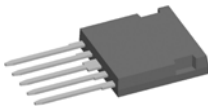

X026d **ISOPLUS-DIL™**

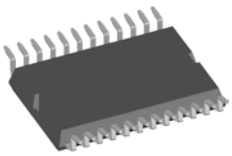

X026c **ISOPLUS-DIL™**

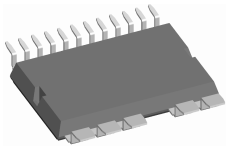

HiPerFET and Polar MOSFET Technology

- low R_{DSon}
- fast body diode
- rugged

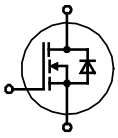
VMO Single Switch

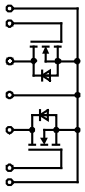
VMK Dual Switch

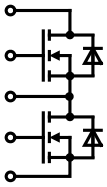
FMM Phase Leg

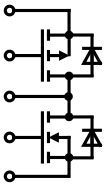
FMP Phase Leg

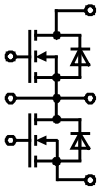
VMM Phase Leg

Suffix „F“ = HiPerFET™ Technology with Fast Intrinsic Diode

Part Type ○ Not for new design ➢ New	V_{DSS} V	I_{D25} T_C = 25°C A	I_{D80} T_C = 80°C A	R_{DSon} typ. T_J = 25°C mΩ	t_r ns	t_f ns	R_{thJC} K/W	NTC	Fig. No.	Package style Outline drawings on pages O-30...O-55
Single Switch Modules										
○ **VMO 550-01F**	100	590	contact factory						X128d	X024a **ISOPLUS i4-PAC™**
○ **VMO 650-01F**		690							X128d	
VMO 1200-01F		1245	930	1.35	200	500	0.039		X130d	
○ **VMO 580-02F**	200	580	contact factory						X130d	
○ **VMO 60-05F**	500	60	contact factory						X125f	
Dual Switch Modules – Common Source Configuration										X125a **TO-240AA**
○ **VMK 90-02T2**	200	84	contact factory						X125a	
MOSFET Modules – Phase Leg Configuration										
FMM 75-01F	100	75	50 / 90°C	21	60	60	0.50		X024a	X125f **TO-240AA**
○ **VMM 650-01F**		680	contact factory					•	X130e	
➢ **FMP 36-015P** ①	±150	-22 / 36	*	110 / 40	31	15	1.0 / 1.0		X024a	
➢ **FMP 26-02P** ①	±200	-17 / 26	*	170 / 60	33	21	1.0 / 1.0			
○ **VMM 45-02F**		45	contact factory						X125g	
○ **VMM 300-03F**	300	290	contact factory						X128a	
➢ **FMM 22-05PF**	500	13	-	270	25	21	0.95		X024a	
➢ **FMM 22-06PF**	600	12	-	350	20	23	0.95			
○ **VMM 90-09F**	900	85	65	76	140	180	0.08	•	X130e	X125g **TO-240AA**
➢ **VMM 90-09P**	900	94	70	62	*	*	0.08	•	X130e	

① high side switch: p-channel; low side switch: n-channel * in progress

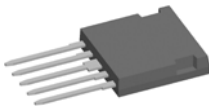

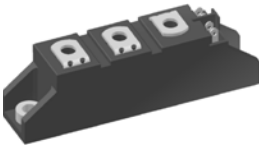

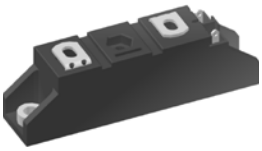

X130e **Y3**

X130d **Y3**

X128d **Y3**

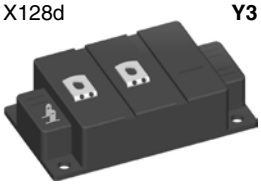

X128a **Y3**

MOSFET Modules

CoolMOS™ MOSFET Technology

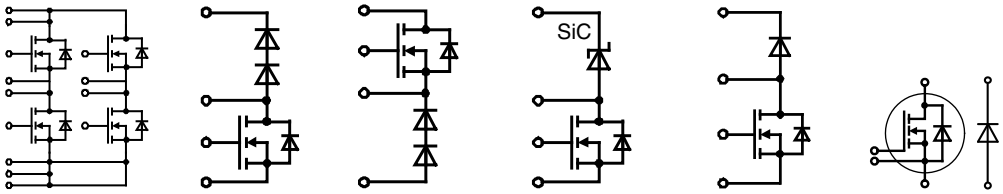

VKM H-Bridge | FMD Boost | FDM Buck | MKE..R..DCG.. SiC boost | MPA...R... boost | MKE...RK... buck/boost

Part Type ○ Not for new design ✧ Under development ➢ New	V_{DSS} V	I_{D25} $T_C = 25°C$ A	I_{D80} $T_C = 90°C$ A	R_{DSon} typ. $T_J = 25°C$ mΩ	t_r ns	t_f ns	R_{thJC} K/W	Fig. No.
MOSFET Modules – H Bridge Configuration								
VKM 40-06P1*	600	38		70	10	95	0.45	X102
MOSFET Modules – Boost Configuration								
○ **FMD 21-05QC**	500	21	15	180	16	30	1.50	X024a
FMD 40-06KC *	600	38	25	60	30	10	0.45	
FMD 15-06KC5 *		15	11	150	5	5	1.10	
FMD 47-06KC5 *		47	32	40	20	10	0.45	
➢ **MPA 22R600DHGFC**		17	13	220	in progress		0.70	
➢ **MKE 11R600DCGFC** [1]		15	11	150	6	4	1.10	
MKE 38RK600DFELB		50	38 / 80°C	40	20	10	0.45	X030a
✧ **MKG 40RK600LB**		52	40	37	in progress			
✧ **MKG 40RK600DCGLB** [1]		52	40	37	in progress			
✧ **MCB 21RK1200DCGLC** [1]	1200	30	21	80	in progress			X030b
MOSFET Modules – Buck Configuration								
FDM 15-06KC5 *	600	15	11	150	5	5	1.10	X024a
FDM 47-06KC5 *		47	32	40	20	10	0.45	

Package style Outline drawings on pages O-30...O-55

X024a **ISOPLUS i4-PAC™**

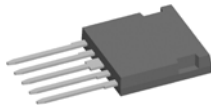

X030a **SMPD-B**

X030b **SMPD-B**

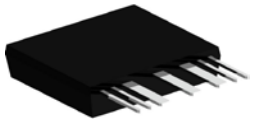

X102 **ECO-PAC2**

[1] with SiC Boost Diode

* CoolMOS™ is a trademark of Infineon Technologies

Module with HiPerFET™ H-Bridge and Single Phase Mains Rectifier Bridge

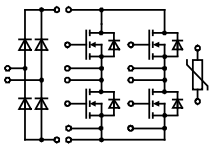

X104 **V2-Pack**

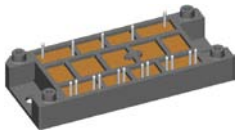

Type ➢ New	V_{DSS} V	I_D $T_C = 25°C$ A	I_D $T_C = 80°C$ A	$R_{DSon, max}$ $T_C = 25°C$ mΩ	V_{DRM} Rectifier V	I_{DAVM} A	@ T_C °C	Fig. No.
VBH 40-05B	500	40	30	116	1200	33	80	X104

Rectifier Bridges for Power Factor Correction

Power Stage for Boost Converters (Power Factor Correction)

1-phase PFC

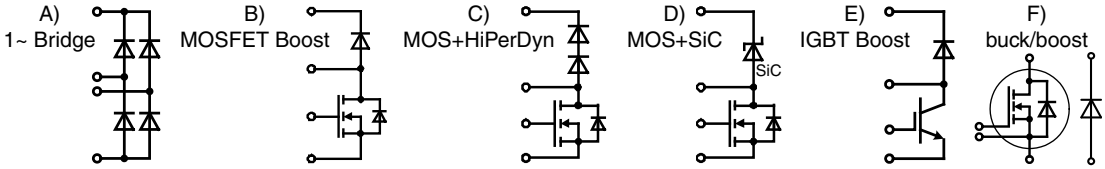

Type ○ Not for new design ✧ Under development ➢ New	Circuit	V_{DSS} max V	I_D T_C = 25°C A	$R_{DS(on)}$ max Ω	V_{RRM} Boost Diode V	V_{RRM} Rectifier V	Fig. No.	Package style Outline drawings on pages O-30...O-55
MOSFET								X024a **ISOPLUS i4-PAC**
○ **FMD 21-05QC**	C	500	21	0.220	600	-	X024a	
➢ **MPA 22R600DHGFC**	B	600	17	0.240		-		
MKE 11R600DCGFC	D, CoolMOS™		15	0.165		-		
FMD 15-06KC5	C, CoolMOS™		15	0.165		-		
MKE 38RK600DFELB	B, CoolMOS™		50	0,045		-	X030a	
✧ **MKG 40RK600LB**	F, CoolMOS™ C6		52	0,037		-		
✧ **MKG 40RK600DCGLB**	F, CoolMOS™ C6 + SiC		52	0,037		-		
✧ **MCB 21RK1200DCGLC**	F, SiC MOSFET/diode	1200	30	0,080	1200	-	X030b	
FMD 40-06KC	C, CoolMOS™	600	38	0.070	600	-	X024a	X030a **SMPD-B**
FMD 47-06KC5	C, CoolMOS™		47	0.045		-		
○ **VUM 24-05N**	A + B	500	35	0.120	600	800	X105b	
○ **VUM 33-05N**		500	47					
➢ **VUM 33-06PH**		600	50					

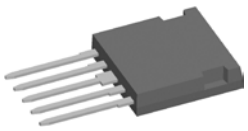

Type	Circuit	V_{CES} max V	I_C T_C = 25°C A	V_{CEsat} @ I_C V	A		V_{RRM} Rectifier V	
IGBT								X030b **SMPD-B**
FID 60-06D	E	600	65	1.6	30		-	X024a

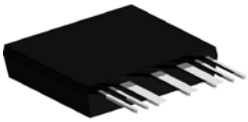

Type	Circuit	V_{RRM} V	I_{DAV} A	@ T_C °C	
Rectifier					
FBO 16-12N *	A	1200	22	90	X024a
FBO 40-12N *			40	90	
DLA 100B1200LB **			124	80	X030a

X103 **V1-A-Pack**

* Recommended in combination with FMD and FID
** Recommended in combination with MKE and MKG

CoolMOS™ is a trademark of Infineon Technologies

3-phase PFC

"Vienna Rectifier" circuit
- wide input voltage range
- sinusoidal mains input currents in phase with mains
- boost converter operation:
  - input: 3~ AC mains without neutral conductor
  - output: stabilized DC link with center point
- one module used per phase

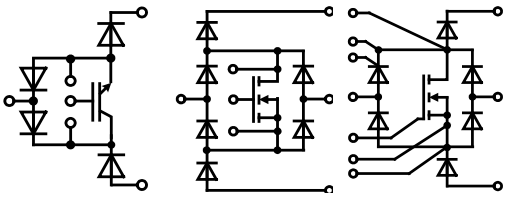

X104 **V2-Pack**

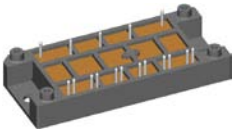

Type	PN / kW 3 ~ 400V, T_C = 80°C	Configuration	Fig. No.
VUM 25-05E ①	10	Vienna rectifier current	X103
VUM 85-05A ①	30	Vienna rectifier current	X104
VUI 30-12N1 ①	15	IGBT stage for buck @ boost PWM converter	X103

① contact factory

X105b **V1-B-Pack**

Diodes for High Switching Frequencies

Fast Recovery Epitaxial Diodes (HiPerFRED, FRED) and FRD (SONIC)

Power switches (IGBT, MOSFET, BJT, GTO) for applications in electronics are only as good as their associated free-wheeling diodes. At increasing switching frequencies, the proper functioning and efficiency of the power switch, aside from conduction losses, is determined by the turn-off behavior of the diode (characterized by Q_{rr}, I_{RM} and t_{rr} - Fig. 1). With optimized ultra-fast switching diodes, the development engineer has various possibilities: either higher pulse rate or higher current load or smaller heatsink or more conservative operation due to „cooler“ chips.

The reverse current characteristic following the peak reverse current I_{RM} is another very important property. The slope of the decaying reverse current di_{rr}/dt results from design parameters (technology and diffusion of the diode chips). In a circuit this current slope, in conjunction with parasitic inductances (e.g. connecting leads), causes overvoltage spikes and high frequency interference voltages. The higher the d_{irr}/dt („hard recovery“ or „snap-off“ behavior) the higher is the resulting additional stress for both the diode and the paralleled switch. A slow decay of the reverse current („soft recovery“ behavior), is the most desirable characteristic, and this is designed into all diodes. The wide range of available blocking voltages makes it possible to apply these diodes as output rectifiers in switch-mode power supplies (SMPS) as well as protective and free-wheeling diodes for power switches in inverters.

Diodes for General Purpose Applications

Rectifier Diodes

Diodes of the DS-series (anode on stud) and of the DSI-series (cathode on stud) are mainly used for rectifying 50 or 60 Hz mains currents. Discrete diodes in plastic and metal housings and also different diode bridges are available for standard line voltages (from 110 V to 690 V AC).

Avalanche Diodes

Avalanche diodes or surge-voltage-proof rectifier diodes of the series DSA (anode on stud) and DSAI (cathode on stud) differ from standard diodes of the series DS and DSI in the following manner: the operation in avalanche breakdown above the normal reverse blocking voltage (V_{RRM}) can be tolerated as long as the power is within the specified maximum permissible non-repetitive reverse surge dissipation P_{RSM} at the specified pulse width. In order to have technologically good control of the avalanche breakdown, it is important to ensure homogeneous doping of the middle zone of the silicon chip and suitable junction termination and passivation at the edges where PN-junctions are exposed to the surface (high field strength at the edge). Because of this ruggedness against periodically occurring short-term voltage surges in the blocking direction, the user frequently can do without protective overvoltage net-works. In addition, if avalanche diodes are put in series for high voltage applications, the sharp avalanche breakdown of the blocking characteristic ensures static and dynamic voltage distribution uniformly across each device. Thus, in general, none of the series diodes will be overstressed by reverse voltages which are substantially above the avalanche voltage. All high voltage rectifier modules manufactured in quantity are assembled with avalanche diodes.

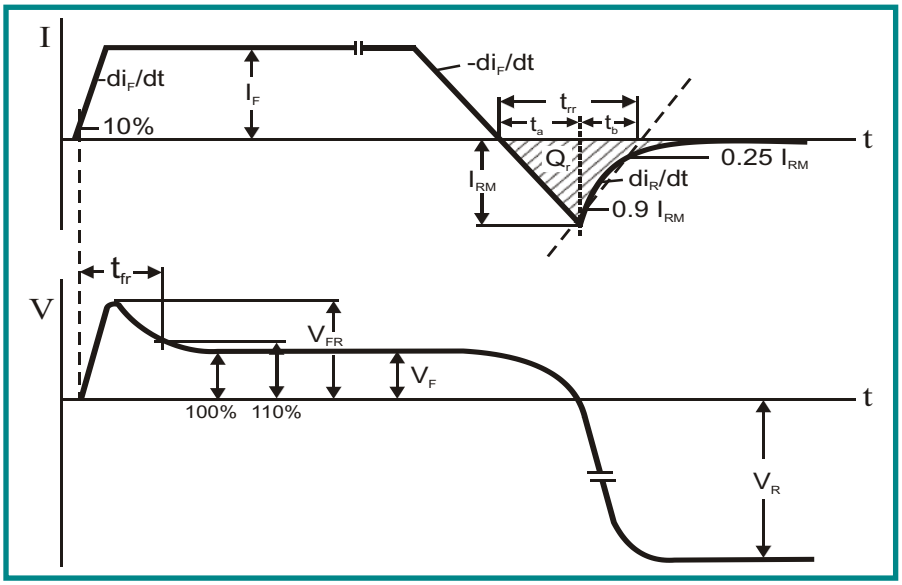

Fig. 1: Current and voltage during turn-on and turn-off switching of fast diodes

Schottky Gen² Diodes

I_{FAV} = 10 - 300 A

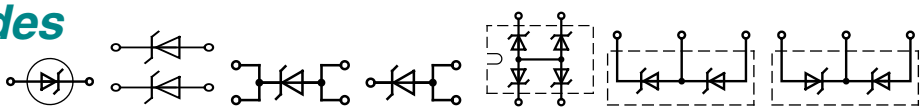

DS...I... DS...X... DS...I...NA DS...IM... DS...A... DS...P... DS...C...

Type	V_{RRM}	I_{FAV}	@ T_C	V_F	@ I_F	T_{VJM}	R_{thJC}	Fig. No.
		d = 0.5		T_{VJ} = 125°C				
➢ New	V	A	°C	V	A	°C	K/W	
DSB 20I15PA	15	20	130	0.39	20	150	1.75	X005b
DSB 40C15PB		2x 20	130	0.39	20	150	1.75	X005a
DSB 30C30PB	30	2x 15	130	0.44	15	150	1.75	X005a
DSB 60C30PB		2x 30	130	0.49	30	150	0.85	X005a
DSB 60C30HB		2x 30	125	0.47	30	150	0.95	X014a
DSB 10I45PM	45	10	115	0.52	10	150	4.50	X007b
DSA 20C45PB		2x 10	155	0.62	10	175	2.40	X005a
DSA 15I45PA		15	155	0.63	15	175	1.75	X005b
DSA 15IM45IB		15	155	0.63	15	175	1.75	X008a
DSB 15IM45IB		15	125	0.55	15	150	1.75	X008a
DSA 30C45PB		2x 15	155	0.63	15	175	1.75	X005a
➢ **DSA 30C45PC**		2x 15	155	0.63	15	175	1.75	X011b
DSB 30C45PB		2x 15	125	0.55	15	150	1.75	X005a
DSA 30C45HB		2x 15	155	0.62	15	175	1.75	X014a
DSB 30C45HB		2x 15	125	0.54	15	150	1.75	X014a
DSA 60C45PB		2x 30	150	0.67	30	175	0.85	X005a
DSB 60C45PB		2x 30	125	0.60	30	150	0.85	X005a
DSA 60C45HB		2x 30	150	0.66	30	175	0.95	X014a
DSB 60C45HB		2x 30	125	0.58	30	150	0.95	X014a
DSA 80C45HB		2x 40	150	0.69	40	175	0.70	X014a
DSB 80C45HB		2x 40	120	0.59	40	150	0.70	X014a
DSA 300I45NA		300	95	0.70	300	150	0.20	X027a
➢ **DSB 10P60PN**	2x 60	10	110	0.62	10	150	4.50	X007a
DSA 20C60PN	60	2x 10	140	0.70	10	175	4.50	X007a
DSB 20C60PN		2x 10	110	0.62	10	150	4.50	X007a
DSA 30C60PB		2x 15	150	0.72	15	175	1.75	X005a
DSB 30C60PB		2x 15	125	0.64	15	150	1.75	X005a
DSA 60C60PB		2x 30	150	0.77	30	175	0.85	X005a
DSB 60C60PB		2x 30	125	0.69	30	150	0.85	X005a
DSA 60C60HB		2x 30	150	0.75	30	175	0.95	X014a
DSB 60C60HB		2x 30	125	0.67	30	150	0.95	X014a
DSA 10I100PM	100	10	135	0.71	10	175	4.50	X007b
DSA 20C100PB		2x 10	155	0.71	10	175	2.40	X005a
DSA 20C100PN		2x 10	135	0.71	10	175	4.50	X007a
DSA 30C100PB		2x 15	150	0.73	15	175	1.75	X005a
DSA 30C100PN		2x 15	120	0.73	15	175	4.25	X007a
DSA 30C100HB		2x 15	150	0.72	15	175	1.75	X014a
DSA 30C100QB		2x 15	150	0.72	15	175	1.75	X017a
DSA 50C100HB		2x 25	155	0.72	25	175	0.95	X014a
DSA 50C100QB		2x 25	155	0.72	25	175	0.95	X017a
DSA 30I100PA		30	150	0.78	30	175	0.85	X005b
DSA 60C100PB		2x 30	150	0.78	30	175	0.85	X005a
DSA 70C100HB		2x 35	150	0.74	35	175	0.70	X014a
DSA 80C100PB		2x 40	150	0.80	40	175	0.60	X005a
➢ **DSA 320A100NB** ①		4x 80	85	0.77	80	150	0.80	X027b
DSA 300I100NA		300	90	0.79	300	150	0.20	X027a

Package style Outline drawings on pages O-30...O-55

X005a **TO-220AB**

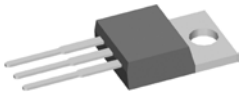

X005b **TO-220AC**

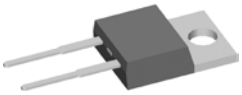

X007a **TO-220ABFP**

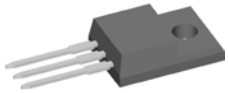

X007b **TO-220ACFP**

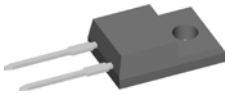

X008a **TO-262AA (I²-PAK)**

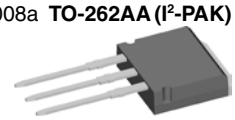

X014a **TO-247AD**

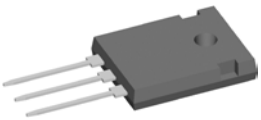

X011b **TO-263AB**

X017a **TO-3P**

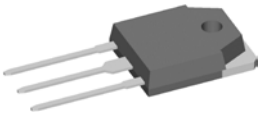

X027a/b **SOT-227B miniBLOC**

① Non isolated base plate

Data according to IEC 60747 and refer to a single diode or thyristor unless otherwise stated.

Schottky Gen² Diodes

I_{FAV} = 5 - 300 A

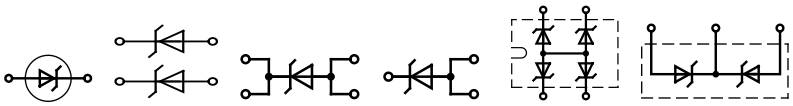

Type	V_{RRM}	I_{FAV}	@ T_C	V_F	@ I_F	T_{VJM}	R_{thJC}	Fig. No.
		d = 0.5		T_{VJ} = 125°C				
➢ New	V	A	°C	V	A	°C	K/W	
DSA 10C150PB	150	2x 5	155	0.71	5	175	4.80	X005a
DSA 20C150PB		2x 10	155	0.73	10	175	2.40	X005a
DSA 20C150PN		2x 10	135	0.73	10	175	4.50	X007a
DSA 30C150PB		2x 15	150	0.75	15	175	1.75	X005a
DSA 30C150HB		2x 15	150	0.74	15	175	1.75	X014a
DSA 50C150HB		2x 25	155	0.74	25	175	0.95	X014a
DSA 30I150PA		30	150	0.80	30	175	0.85	X005b
DSA 60C150PB		2x 30	150	0.80	30	175	0.85	X005a
DSA 70C150HB		2x 35	150	0.77	35	175	0.70	X014a
DSA 120C150QB		2x 60	150	0.80	60	175	0.40	X017a
DSA 120X150LB		2x 60	150	0.80	60	175	0.80	X030a
➢ DSA 600A150NB ①		4x 150	115	0.93	150	150	0.30	X027b
DSA 240X150NA		2x 120	95	0.85	120	150	0.40	X027a
DSA 15IM200UC	200	15	145	0.78	15	175	2.00	X004
DSA 30C200IB		2x 15	150	0.78	15	175	1.75	X008a
DSA 30C200PB		2x 15	150	0.78	15	175	1.75	X005a
DSA 70C200HB		2x 35	150	0.79	35	175	0.70	X014a
DSA 90C200HB		2x 45	145	0.86	45	175	0.55	X014a
DSA 90C200HR		2x 45	140	0.79	45	175	0.70	X016c
➢ DSA 120X200LB		2x 60	150	0.87	60	175	0.80	X030a
➢ DSA 240X200LB		2x 120	150	0.87	120	175	0.40	X030a
DSA 240X200NA		2x 120	90	0.87	120	150	0.40	X027a
DSA 300I200NA		300	80	0.88	300	150	0.20	X027a

Package style
Outline drawings
on pages O-30...O-55

X004 **TO-252AA**

X005a **TO-220AB**

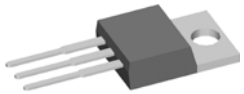

X005b **TO-220AC**

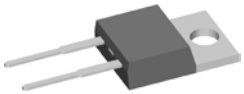

X007a **TO-220ABFP**

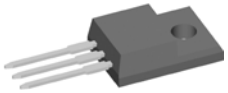

X008a **TO-262AA (I²-PAK)**

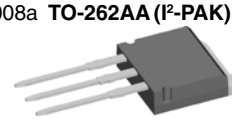

① Non isolated base plate

X017a **TO-3P**

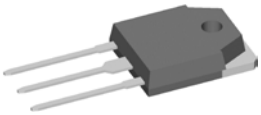

X016c **ISO247**

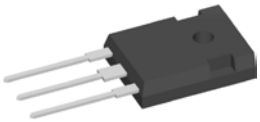

X014a **TO-247AD**

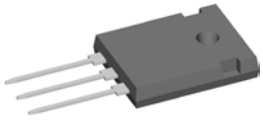

X030a **SMPD-B**

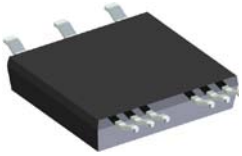

X027a/b **SOT-227B miniBLOC**

Data according to IEC 60747 and refer to a single diode or thyristor unless otherwise stated.

Schottky Diodes

I_{FAV} = 6 - 2x 200 A

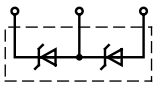
DSSS...

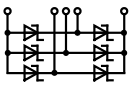
FUS...

DSS...

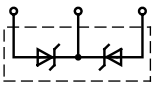
DSSK...

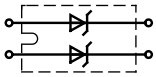
DSS 2x...

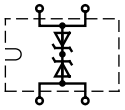
DSS 2x...

Type	V_{RRM} V	I_{FAV} A	@ T_C °C	V_F V	@ I_F A	T_{VJM} °C	R_{thJC} K/W	Fig. No.
		d = 0.5		T_{VJ} = 125°C				
DSS 40-0008D	8	40	130	0.28	40	150	0.80	X014a
DSSK 80-0008D		2x 40	130	0.28	40	150	0.80	X014a
DSS 2x200-0008D ①		2x 200	90	0.28	100	150	0.40	X027b
DSS 20-0015B	15	20	135	0.33	20	150	1.40	X005b
DSSK 40-0015B		2x 20	135	0.32	20	150	1.40	X014a
DSSK 70-0015B		2x 35	130	0.35	35	150	1.10	X014a
DSS 6-0025BS	25	6	140	0,30	6	150	3.00	X004
DSS 25-0025B		25	125	0.45	25	150	1.40	X005b
DSSK 18-0025BS		2x 10	140	0.37	10	150	1.70	X011b
DSSK 38-0025B		2x 20	130	0.40	20	150	1.40	X005a
DSSK 38-0025BS		2x 20	130	0.40	20	150	1.40	X011b
DSSK 48-0025B		2x 25	130	0.35	20	150	1.20	X005a
DSSK 50-0025B		2x 25	125	0.43	25	150	1.40	X014a
DSSK 80-0025B		2x 40	130	0.39	40	150	0.80	X014a
DSSK 48-003B	30	2x 25	130	0.35	20	150	1.20	X005a
DSSK 48-003BS		2x 25	130	0.35	20	150	1.20	X011b
DSSK 70-003B		2x 35	125	0.39	35	150	1.10	X014a
DSSK 80-003B		2x 40	130	0.39	40	150	0.80	X014a
DSS 6-0045AS	45	6	165	0.50	6	175	3.00	X004
DSS 10-0045B		10	135	0.46	10	150	1.70	X005b
DSS 16-0045A		16	160	0.56	16	175	1.40	X005b
DSS 16-0045AS		16	160	0.56	16	175	1.40	X011b
DSS 25-0045A		25	155	0.56	25	175	1.10	X005b
DSS 60-0045B		60	105	0.57	60	150	0.80	X014b
DSSK 20-0045B		2x 10	135	0.46	10	150	1.70	X005a
DSSK 28-0045BS		2x 15	135	0.43	15	150	1.40	X011b
DSSK 60-0045A		2x 30	150	0.58	30	175	1.10	X014a
DSSK 60-0045B		2x 30	125	0.45	30	150	1.10	X014a
DSSK 80-0045B		2x 40	125	0.46	40	150	0.80	X014a
DSS 2x61-0045A		2x 60	110	0.65	60	150	0.80	X027a
DSS 2x81-0045B		2x 80	85	0.63	80	150	0.80	X027a
DSS 2x121-0045B		2x 120	100	0.59	120	150	0.40	X027a
DSS 2x160-0045A ①		2x 160	90	0.72	160	150	0.40	X027b
FUS 45-0045B		45	90	0.54	15	150	3.10	X024a
DSS 10-006A	60	10	160	0.65	10	175	1.70	X005b
DSSK 28-006BS		2x 15	135	0.52	15	150	1.40	X011b
DSSK 40-006B		2x 20	135	0.46	20	150	1.10	X014a
DSSK 80-006B		2x 40	120	0.51	40	150	0.80	X014a
DSSK 80-006BR		2x 40	120	0.51	40	150	0.80	X016a
DSSK 40-008B	80	2x 20	130	0.52	20	150	1.10	X014a
DSSS 35-008AR	2x 80	35	150	0.68	35	175	0.80	X016a
DSSK 70-008A		2x 35	150	0.64	35	175	0.80	X014a
DSSK 70-008AR		2x 35	150	0.64	35	175	0.80	X016a
DSS 2x111-008A		2x 110	105	0.72	100	150	0.40	X027a
DSS 10-01A	100	10	160	0.66	10	175	1.70	X005b
DSS 10-01AS		10	160	0.66	10	175	1.70	X011b
DSS 16-01A		16	155	0.65	16	175	1.40	X005b
DSS 16-01AS		16	155	0.65	16	175	1.40	X011b
DSS 20-01AC		20	140	0.80	20	175	1.70	X010b
DSSS 30-01AR	2x 100	30	155	0.63	30	175	0.80	X016a
DSSK 16-01A		2x 8	165	0.63	8	175	1.70	X005a
DSSK 16-01AS		2x 8	165	0.63	8	175	1.70	X011b
DSSK 28-01AS		2x 15	160	0.64	15	175	1.40	X011b
DSSK 30-01A		2x 15	160	0.63	15	175	1.40	X014a
DSSK 50-01A		2x 25	155	0.64	25	175	1.10	X014a
DSS 2x41-01A		2x 40	110	0.70	40	150	1.10	X027a
DSS 2x61-01A		2x 60	105	0.74	60	150	0.80	X027a
DSS 2x160-01A ①		2x 160	80	0.81	160	150	0.40	X027b

Package style
Outline drawings
on pages O-30...O-55

X004 **TO-252AA**

X005a **TO-220AB**

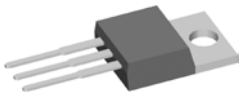

X005b **TO-220AC**

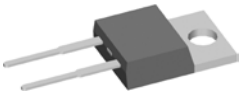

X010b **ISOPLUS220™**

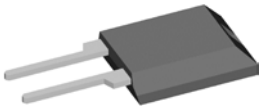

X011b **TO-263AB**

X014a **TO-247AD**

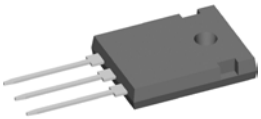

X014b **TO-247AD**

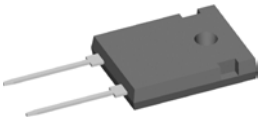

X016a **ISOPLUS247™**

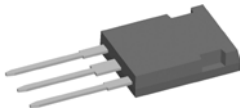

X024a **ISOPLUS i4-PAC™**

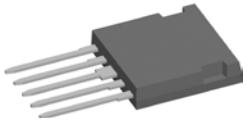

X027a/b **SOT-227B/UI miniBLOC**

① non isolated base plate

Data according to IEC 60747 and refer to a single diode or thyristor unless otherwise stated.

Schottky Diodes

I_{FAV} = 6 - 2x 100 A

DSS...

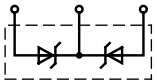
DSSK...

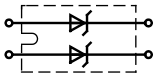
DSS 2x...

Type	V_{RRM}	I_{FAV}	@ T_C	V_F	@ I_F	T_{VJM}	R_{thJC}	Fig. No.
		d = 0.5		T_{VJ} = 125°C				
	V	A	°C	V	A	°C	K/W	
DSS 6-015AS	150	6	160	0.62	6	175	3.00	X004
DSSK 20-015A		2x 10	165	0.61	10	175	1.40	X005a
DSSK 50-015A		2x 25	150	0.68	25	175	1.10	X014a
DSSK 60-015A		2x 30	155	0.66	30	175	0.80	X014a
DSSK 60-015AR		2x 30	155	0.66	30	175	0.80	X016a
DSS 2x101-015A		2x 100	110	0.77	100	150	0.40	X027a
DSSK 10-018A	180	2x 5	165	0.60	5	175	1.70	X005a
DSSK 30-018A		2x 15	150	0.74	15	175	1.70	X014a
DSSK 60-02A	200	2x 30	155	0.70	30	175	0.80	X014a
DSSK 60-02AR		2x 30	155	0.70	30	175	0.80	X016a
DSS 2x101-02A		2x 100	105	0.84	100	150	0.40	X027a

Package style
Outline drawings
on pages O-30...O-55

X004 **TO-252AA**

X005a **TO-220AB**

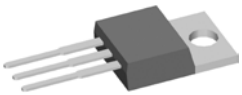

X010a **ISOPLUS220™**

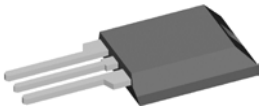

X011b **TO-263AB**

X014a **TO-247AD**

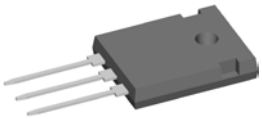

X016a **ISOPLUS247™**

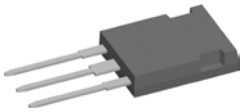

X016b **ISOPLUS247™**

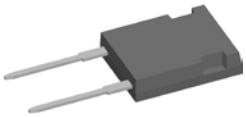

X024a **ISOPLUS i4-PAC™**

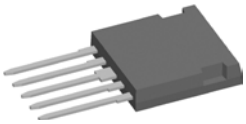

X024b **ISOPLUS i4-PAC™**

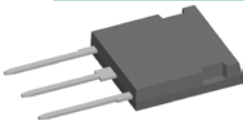

X027a **SOT-227B miniBLOC**

Silicon Carbide Schottky Diodes

No reverse recovery

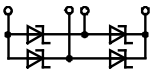

Type	V_{RRM}	I_{FAV}	@ T_C	V_F	@ I_F	C_J	R_{thJC}	Fig. No.
		d = 0.5		typ., T_{VJ} = 125°C				
➢ New	V	A	°C	V	A	pF	K/W	
FBS 10-06SC	600	3.0	90	1.70	4.0	9	8.00	X024a
FBS 16-06SC		5.0	90	1.50	6.0	21	5.60	
FBS 10-12SC	1200	4.5	80	2.61	5.0	33	7.00	

HiPerDyn™FRED

Series connected diodes for high switching frequencies; packages isolated (2500 V_{RMS})

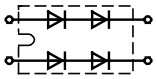
DSEP 2x...-....C

DPH...IS...
DSEP/DSS...-...C

Type	V_{RRM}	I_{FAV}	@ T_C	V_F	@ T_{VJ}	t_{rr}	I_{RM}	@ -di/dt	T_{VJM}	R_{thJC}	Fig. No.
		d = 0.5		I_F =	I_{FAV}	typ. T_{VJ} = 25°C	typ.				
➢ New	V	A	°C	V	°C	ns	A	A/µs	°C	K/W	
DSS 17-06CR *	600	17	95	2.71	125	45	2.0	100	175	1.40	X016b
DPH 30IS600HI		30	140	1.89	150	35	3.0	200	175	0.55	
DSEP 15-12CR	1200	15	135	2.67	150	15	10.0	600	175	1.00	
DSEP 30-12CR		30	120	3.18	150	15	5.5	600	175	0.60	
DSEP 2x25-12C	1200	2x 25	90	2.95	150	15	5.5	600	150	0.60	X027a

* series connected Schottky Diodes

Dual Ultrafast Diodes

Series connected diodes for high switching frequencies with middle connection; packages isolated (2500 V_{RMS})

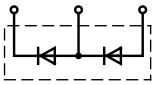
DHH/DSEE/DPG ...P...

DPG 30P300PJ	2x 300	30	135	0.99	150	35	3.0	200	175	1.05	X010a
DPG 10P400PJ	2x 400	10	145	1.03	150	45	4.0	200	175	2.50	
DSEE 15-12CC	2x 600	15	100	1.50	125	35	4.0	100	175	1.60	
DSEE 29-12CC		30	90	1.75	125	30	4.0	100	175	0.90	
DSEE 30-12A ①		30	90	1.78	125	30	4.0	100	175	0.90	X014a
DSEE 55-24N1F	2x 1200	60	110	1.56	150	75	35	600	175	0.60	X024b
DHH 55-36N1F	2x 1800	60	50	2.06	125	230	60	800	150	0.60	

① Non isolated base plate

Data according to IEC 60747 and refer to a single diode or thyristor unless otherwise stated.

HiPerFRED^{2TM} Diodes

I_{FAV} = 10 - 2x 200 A

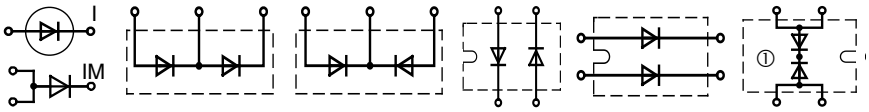

Type	V_{RRM}	I_{FAV}	@ T_C	I_{FSM}	V_F	@ I_F	t_{rr}	I_{RM}	-di/dt	T_{VJM}	R_{thJC}	Fig. No.	Package style
		d = 0.5		10 ms 45°C	T_{VJ} = 150°C		typ. T_{VJ} = 25°C						Outline drawings on pages O-30...O-55
➢ New	V	A	°C	A	V	A	ns	A	A/µs	°C	K/W		
DPG 10I200PA	200	10	145	140	0.98	10	35	3.0	200	175	2.30	X005b	X004 TO-252AA
DPG 10I200PM		10	125	140	0.98	10	35	3.0	200	175	4.40	X007b	
DPG 20C200PB		2x 10	145	140	0.98	10	35	3.0	200	175	2.30	X005a	
DPG 20C200PN		2x 10	125	140	0.98	10	35	3.0	200	175	4.40	X007a	X005a TO-220AB
DPG 15I200PA		15	140	240	1.01	15	35	3.0	200	175	1.70	X005b	
DPG 30C200PB		2x 15	140	240	1.01	15	35	3.0	200	175	1.70	X005a	
DPG 30C200PC		2x 15	140	240	1.01	15	35	3.0	130	175	1.70	X011b	
DPG 30C200HB		2x 15	140	240	1.00	15	35	3.0	200	175	1.70	X014a	
DPF 60C200HB		2x 30	130	400	0.98	30	35	4.0	200	175	0.95	X014a	X005b TO-220AC
DPF 60C200HJ		2x 30	130	560	0.88	30	35	4.0	200	175	1.05	X016a	
DPG 60C200HB		2x 30	135	360	1.06	30	35	3.0	200	175	0.95	X014a	
DPG 60C200QB		2x 30	135	360	1.06	30	35	3.0	200	175	0.95	X017a	
DPF 80C200HB		2x 40	140	560	0.95	40	35	4.0	200	175	0.70	X014a	X007a TO-220ABFP
➢ DPF 60I200HA		60	135	650	0.98	60	35	4.0	200	175	0.55	X014b	
➢ DPF 120X200NA		2x 60	120	1200	0.90	60	35	4.0	200	175	0.60	X027a	
DPF 240X200NA		2x 120	120	1800	0.90	120	35	4.0	200	175	0.45	X027a	
DPG 10I300PA	300	10	145	140	0.98	10	35	3.0	200	175	2.30	X005b	X007b TO-220ACFP
DPG 10IM300UC		10	150	140	0.98	10	35	3.0	200	175	2.30	X004	
DPG 20C300PB		2x 10	145	140	0.98	10	35	3.0	200	175	2.30	X005a	
DPG 20C300PN		2x 10	125	140	0.98	10	35	3.0	200	175	4.40	X007a	
DPG 15I300PA		15	140	240	1.01	15	35	3.0	200	175	1.70	X005b	X010a ISOPLUS220™
DPG 30C300PB		2x 15	140	240	1.01	15	35	3.0	200	175	1.70	X005a	
DPG 30C300PC		2x 15	140	240	1.01	15	35	3.0	200	175	1.70	X011b	
DPG 30C300HB		2x 15	140	240	1.00	15	35	3.0	200	175	1.70	X014a	
DPF 30I300PA		30	145	390	0.98	30	55	6.0	200	175	0.85	X005b	X011b TO-263AB
DPG 30I300HA		30	135	360	1.06	30	35	3.0	200	175	0.95	X014b	
DPG 30I300PA		30	140	360	1.08	30	35	3.0	200	175	0.85	X005b	
DPG 30IM300PC		30	140	360	1.08	30	35	3.0	200	175	0.85	X011b	
DPG 30P300PJ	2x 300	30	135	450	0.99	30	35	3.0	200	175	1.05	X010a	X014a TO-247AD
DPF 60C300HB		2x 30	140	400	0.97	30	55	6.0	200	175	0.95	X014a	
DPG 60C300HB		2x 30	135	360	1.06	30	35	3.0	200	175	0.95	X014a	
DPG 60C300HJ		2x 30	135	450	0.96	30	35	3.0	200	175	1.05	X016a	
DPG 60C300PC		2x 30	140	360	1.08	30	35	3.0	200	175	0.85	X011b	
DPG 60C300QB		2x 30	135	360	1.06	30	35	3.0	200	175	0.95	X017a	X014b TO-247AD
DPG 80C300HB		2x 40	135	450	1.07	40	35	3.0	200	175	0.70	X014a	
DPG 60I300HA		60	125	450	1.10	60	35	3.5	200	175	0.55	X014b	
DPG 60IM300PC		60	135	450	1.14	60	35	3.5	200	175	0.45	X011b	
DPG 120C300QB		2x 60	125	450	1.10	60	35	3.5	200	175	0.55	X017a	
DPG 10I400PA	400	10	145	150	1.03	10	45	4.0	200	175	2.30	X005b	X016a ISOPLUS247™
DPG 10I400PM		10	120	150	1.03	10	45	4.0	200	175	4.40	X007b	
DPG 10P400PJ	2x 400	10	145	130	1.03	10	45	4.0	200	175	2.50	X010a	
DPG 20C400PB		2x 10	145	150	1.03	10	45	4.0	200	175	2.30	X005a	
DPG 20C400PC		2x 10	145	150	1.03	10	45	4.0	200	175	2.30	X011b	
DPG 20C400PN		2x 10	120	150	1.03	10	45	4.0	200	175	4.40	X007a	X016b ISOPLUS247™
DPG 15I400PM		15	90	190	1.14	15	45	4.0	200	175	4.20	X007b	
DPG 30C400PB		2x 15	140	190	1.14	15	45	4.0	200	175	1.70	X005a	
DPG 30C400HB		2x 15	140	190	1.13	15	45	4.0	200	175	1.70	X014a	
DPG 30I400HA		30	135	360	1.13	30	45	4.0	200	175	0.95	X014b	
➢ DPF 60XA400NA		2x 30	130	400	1.00	30	60	6.0	200	175	1.15	X027a	X017a TO-3P
DPG 60C400HB		2x 30	135	360	1.13	30	45	4.0	200	175	0.95	X014a	
DPG 60C400QB		2x 30	135	360	1.13	30	45	4.0	200	175	0.95	X017a	
DPG 80C400HB		2x 40	135	400	1.14	40	45	4.0	200	175	0.70	X014a	
DPG 60I400HA		60	120	450	1.22	60	45	4.0	200	175	0.55	X014b	
DPF 60IM400HB		60	130	600	1.09	60	60	6.0	200	175	0.55	X014a	X027a/b SOT-227B/UI miniBLOC
DPG 60IM400QB		60	120	450	1.22	60	45	4.0	200	175	0.55	X017a	
➢ DPF 120X400NA		2x 60	120	530	0.95	60	60	6.0	200	175	0.60	X027a	
DPF 240X400NA		2x 120	120	1100	0.95	120	60	6.0	200	175	0.45	X027a	
➢ DPF 400C400NB ①		2x 200	130	1600	0.90	200	60	6.0	200	175	0.20	X027b	
DPH 30IS600HI	600	30	140	450	1.89	30	35	3.0	200	175	0.55	X016b	

① Non isolated base plate

Data according to IEC 60747 and refer to a single diode or thyristor unless otherwise stated.

HiPerFRED™ Diodes

I_{FAV} = 8 - 2x 120 A

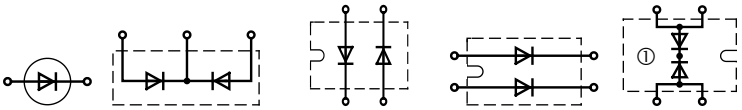

Type	V_{RRM}	I_{FAV}	T_C	I_{FSM}	V_F	@ I_F	t_{rr}	I_{RM}	-di/dt	T_{VJM}	R_{thJC}	Fig. No.	Package style
		d = 0.5		10 ms 45°C	T_{VJ} = 150°C		T_{VJ} = 25°C	typ. T_{VJ} = 100°C	typ.				Outline drawings on pages O-30...O-55
➢ New	V	A	°C	A	V	A	ns	A	A/µs	°C	K/W		
DSEP 40-03AS	300	40	125	340	1.18	40	35	3.5	200	175	0.85	X011b	X004 TO-252AA
DSEP 6-06AS	600	6	150	40	1.34	6	20	3.5	100	175	2.80	X004	
DSEP 6-06BS		6	140	40	1.77	6	15	2.0	100	175	2.80	X004	
DSEP 8-06A		10	145	50	1.42	10	35	3.5	100	175	2.50	X005b	
DSEP 8-06B		10	130	50	1.85	10	30	2.0	100	175	2.50	X005b	X005a TO-220AB
DSEP 15-06A		15	140	110	1.35	15	35	4.0	100	175	1.60	X005b	
➢ DSEP 15-06AS		15	140	110	1.35	15	35	4.0	100	175	1.60	X011b	
DSEP 15-06B		15	130	110	1.59	15	25	2.0	100	175	1.60	X005b	
➢ DSEP 15-06BS		15	130	110	1.59	15	25	2.0	100	175	1.60	X011b	X005b TO-220AC
DSEP 29-06A		30	135	250	1.26	30	35	5.5	100	175	0.90	X005b	
DSEP 29-06AS		30	135	250	1.26	30	35	5.5	100	175	0.90	X011b	
DSEP 29-06B		30	120	250	1.63	30	30	3.0	100	175	0.90	X005b	
DSEP 30-06A		30	135	250	1.25	30	35	5.5	100	175	0.90	X014b	X010a ISOPLUS220™
DSEP 30-06B		30	120	250	1.61	30	30	3.0	100	175	0.90	X014b	
DSEP 30-06BR		30	100	250	1.61	30	30	3.0	100	175	1.10	X016b	
DSEP 60-06A		60	110	600	1.39	60	35	5.5	100	175	0.65	X014b	
DSEP 60-06AT		60	110	600	1.39	60	35	5.5	100	175	0.65	X019	X011b TO-263AB
DSEP 8-12A	1200	10	130	40	1.96	10	40	4.0	100	175	2.50	X005b	
DSEP 12-12A		15	130	90	1.87	15	40	4.5	100	175	1.60	X005b	
➢ DSEP 12-12AZ		15	130	90	1.87	15	40	4.5	100	175	1.60	X011c	
DSEP 12-12B		15	130	90	2.06	15	35	3.0	100	175	1.60	X005b	X011c TO-263AB
➢ DSEP 12-12BZ		15	130	90	2.06	15	35	3.0	100	175	1.60	X011c	
DSEP 29-12A		30	120	200	1.81	30	40	8.5	100	175	0.90	X005b	
DSEP 30-12A		30	115	200	1.79	30	40	8.5	100	175	0.90	X014b	
DSEP 30-12AR		30	100	200	1.79	30	40	8.5	100	175	1.10	X016b	
DSEP 60-12A		60	85	500	1.81	60	40	7.0	100	175	0.65	X014b	X014a TO-247AD
DSEP 60-12AR		60	60	500	1.81	60	40	7.0	100	175	0.80	X016b	
DSEC 16-06A	600	2x 10	145	50	1.42	10	35	3.5	100	175	2.50	X005a	
DSEC 16-06AC		2x 8	85	50	1.20	10	35	3.5	100	175	3.00	X010a	
DSEC 29-06AC		2x 15	140	110	1.34	15	35	4.0	100	175	1.60	X010a	X014b TO-247AD
DSEC 30-06A		2x 15	140	110	1.34	15	35	4.0	100	175	1.60	X014a	
DSEC 30-06B		2x 15	130	110	1.58	15	25	2.0	100	175	1.60	X014a	
DSEC 59-06BC		2x 30	105	200	1.56	30	30	4.0	100	175	1.10	X010a	
DSEC 60-06A		2x 30	135	250	1.25	30	35	5.5	100	175	0.90	X014a	
DSEC 60-06B		2x 30	120	250	1.61	30	30	3.0	100	175	0.90	X014a	X016b ISOPLUS247™
DSEC 16-12A	1200	2x 10	130	40	1.96	10	40	4.0	100	175	2.50	X005a	
DSEC 16-12AS		2x 10	130	40	1.96	10	40	4.0	100	175	2.50	X011b	
DSEC 30-12A		2x 15	115	90	1.86	15	40	4.5	100	175	1.60	X014a	
DSEC 60-12A		2x 30	115	200	1.79	30	40	8.5	100	175	0.90	X014a	
DSEC 120-12AK		2x 60	85	500	1.81	60	40	7.0	100	175	0.65	X020a	X019 TO-268AA
DSEP 2x31-03A	300	2x 30	110	300	0.90	30	30	4.5	100	150	1.15	X027a	
DSEP 2x61-03A		2x 60	75	600	1.26	60	30	4.0	100	150	0.85		
DSEP 2x91-03A		2x 90	70	1000	1.10	90	30	4.5	100	150	0.60		
DSEP 2x31-06A	600	2x 30	95	250	1.23	30	35	5.5	100	150	1.15		X020a TO-264
DSEP 2x31-06B		2x 30	75	250	1.59	30	30	3.0	100	150	1.15		
DSEP 2x61-06A		2x 60	65	600	1.48	60	35	5.5	100	150	0.85		
DSEP 2x91-06A		2x 90	55	1000	1.39	90	35	8.0	100	150	0.60		
DSEP 2x31-12A	1200	2x 30	70	200	1.77	30	40	8.5	100	150	1.15		
DSEP 2x60-12A		2x 60	80	800	1.52	60	40	8.0	100	150	0.60		X027a/b SOT-227B/UI miniBLOC
DSEP 2x61-12A		2x 60	80	800	1.52	60	40	8.0	100	150	0.60		
DSEP 2x101-04A	400	2x 100	45	1000	1.22	125	30	5.5	100	150	0.60		
DSEC 240-04A ①		2x 120	75	2000	1.00	120	30	5.5	100	150	0.45	X027b	
DSEC 240-06A ①	600	2x 120	75	2000	1.26	120	35	8.0	100	150	0.40		
➢ DPG 60B600LB		60	110	250	0.84	19.6	30	3.0	100	175	1.10	X030a	

① Non isolated base plate

Data according to IEC 60747 and refer to a single diode or thyristor unless otherwise stated.

SONIC-FRD™ Diodes

I_{FAV} = 5 - 2x 60 A
- ultrasoft and fast recovery
- very low temperature dependence

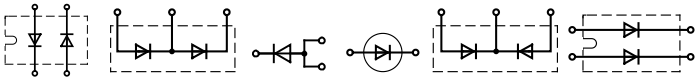

DH 2x...0-... DHH... DHG...IM... DHG... I... DHG... C... DHG... X...

Type	V_{RRM}	I_{FAV}	@ T_C	I_{FSM}	V_F	@ I_F	t_{rr}	I_{RM}	-di/dt	T_{VJM}	R_{thJC}	Fig. No.
		d = 0.5		10 ms 45°C	T_{VJ} = 125°C		typ. T_{VJ} = 25°C					
➢ New	V	A	°C	A	V	A	ns	A	A/µs	°C	K/W	
DHG 5I600PA	600	5	105	40	2.17	5	35	2	100	150	3.15	X005b
DHG 5I600PM		5	85	40	2.17	5		2	100		4.20	X007b
DHG 10C600PB		2x 5	105	40	2.17	5		2	100		3.15	X005a
DHG 10I600PA		10	95	80	2.18	10		4	200		1.80	X005b
DHG 10I600PM		10	25	80	2.18	10		4	200		4.00	X007b
DHG 20C600PB		2x 10	95	80	2.18	10		4	200		1.80	X005a
DHG 20C600QB		2x 10	95	80	2.17	10		4	200		1.80	X017a
DHG 20I600PA		20	100	150	2.21	20		8	400		0.80	X005b
DHG 20I600HA		20	95	150	2.19	20		8	400		0.90	X014b
DHG 40C600PB		2x 20	100	150	2.21	20		8	400		0.80	X005a
DHG 40C600HB		2x 20	95	150	2.19	20		8	400		0.90	X014a
DHG 50X600NA		2x 25	70	200	2.03	25		12	600		1.20	X027a
DHG 30I600PA		30	95	200	2.24	30		12	600		0.60	X005b
DHG 30IM600PC		30	95	200	2.22	30		12	600		0.60	X011b
DHG 30I600HA		30	85	200	2.21	30		12	600		0.70	X014b
DHG 60C600HB		2x 30	85	200	2.21	30		12	600		0.70	X014a
DHG 100X600NA		2x 50	80	430	2.00	50		20	1200		0.60	X027a
DHG 60I600HA		60	95	430	2.10	60		24	1200		0.30	X014b
DHG 10I1200PA	1200	10	95	65	2.13	10	75	8	350	150	1.80	X005b
DHG 10I1200PM		10	30	65	2.13	10		8	350		4.00	X007b
DHG 20C1200PB		2x 10	95	65	2.13	10		8	350		1.80	X005a
DHG 20I1200PA		20	105	135	2.16	20		19	750		0.80	X005b
DHG 20I1200HA		20	95	135	2.14	20		19	750		0.90	X014b
DHG 40C1200HB		2x 20	95	135	2.14	20		19	750		0.90	X014a
DHG 50X1200NA		2x 25	70	180	2.00	25		25	1000		1.20	X027a
DHG 30I1200HA		30	90	180	2.16	30		25	1000		0.70	X014b
DHG 100X1200NA		2x 50	65	430	2.05	50		50	2500		0.60	X027a
DHG 60I1200HA		60	95	430	2.22	60		50	2500		0.30	X014b
DHG 10I1800PA	1800	10	85	65	2.30	10	150	8	200	150	2.15	X005b
DH 20-18A	1800	20	80	150	2.94	20		16	300		0.90	X014b
DH 40-18A	1800	40	85	350	2.69	40		33	400		0.45	X014b
DH 60-14A	1400	60	100	700	2.05	60		60	800		0.30	X014b
DH 60-16A	1600	60	100	700	2.05	60		60	800		0.30	X014b
DH 60-18A	1800	60	100	700	2.05	60		60	800		0.30	X014b
DHH 55-36N1F	2x 1800	60	50	700	2.05	60		60	800		0.60	X024b
DH 2x60-18A	1800	2x 60	55	700	2.02	60		60	800		0.60	X027a
➢ DH 2x61-16A	1600	2x 60	55	700	2.02	60		60	800		0.60	X027a
DH 2x61-18A	1800	2x 60	55	700	2.02	60		60	800		0.60	X027a

Package style

Outline drawings on pages O-30...O-55

X005a **TO-220AB**

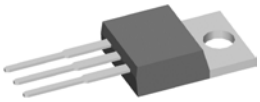

X005b **TO-220AC**

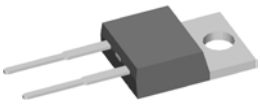

X007b **TO-220ACFP**

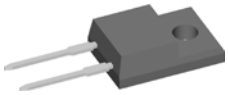

X011b **TO-263AB**

X014a **TO-247AD**

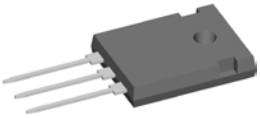

X014b **TO-247AD**

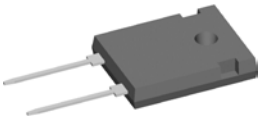

X017a **TO-3P**

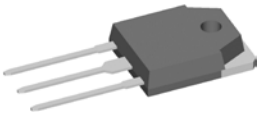

X027a **SOT-227B miniBLOC**

X024b **ISOPLUS i4-PAC™**

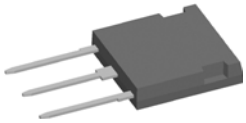

Data according to IEC 60747 and refer to a single diode or thyristor unless otherwise stated.

FRED Diodes

Fast Recovery Epitaxial Diodes

I_{FAV} = 8 - 2x 165 A

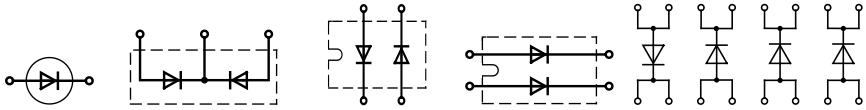

DSEI.../DFE... DSEK... DSEI 2x...0-... DSEI 2x...1-... 2x...0-... 2x...1-...

Type	V_{RRM}	I_{FAV}	@ T_C	I_{FRMS}	I_{FSM}	V_F	@ I_F	t_{rr} typ.	I_{RM} typ.	-di/dt	R_{thJC}	Fig. No.
		d = 0.5			10 ms 45°C	T_{VJ} = 150°C		T_{VJ} = 25°C	T_{VJ} = 100°C			
➢ New	V	A	°C	A	A	V	A	ns	A	A/µs	K/W	
DSEI 8-06A	600	8	115	16	100	1.30	8	35	2.5	64	2.50	X005b
DSEI 8-06AS	600	8	115	16	100	1.30	8	35	2.5	64	2.50	X011b
DFE 10I600PM	600	10	100	16	100	1.30	10	35	2.5	64	4.20	X007b
DSEI 12-06A	600	14	100	25	100	1.50	16	35	4.0	100	2.00	X005b
➢ DSEI 12-06AS	600	14	100	25	100	1.50	16	35	4.0	100	2.00	X011b
DSEI 12-10A	1000	12	100	25	75	2.10	12	50	6.5	100	1.60	X005b
DSEI 12-12A	1200	11	100	25	75	2.20	12	50	6.5	100	1.60	
➢ DSEI 12-12AZ	1200	11	100	25	75	2.20	12	50	6.5	100	1.60	X011c
DSEI 20-12A	1200	17	85	70	130	1.87	12	40	7.0	100	1.60	X005b
DSEI 19-06AS	600	20	65	25	100	1.50	16	35	4.0	100	2.00	X011b
DSEI 36-06AS	600	37	85	70	300	1.40	37	35	10.0	240	1.00	X011b
DSEI 30-06A	600	37	85	70	300	1.40	37	35	10.0	240	1.00	X014b
DSEI 30-10A	1000	30	85	70	200	2.00	36	35	16.0	240	0.90	
DSEI 30-10AR	1000	30	85	70	200	2.00	36	35	16.0	240	0.90	X016b
DSEI 30-12A	1200	26	85	70	200	2.20	30	40	16.0	240	0.90	X014b
DSEI 60-02A	200	69	85	98	600	0.88	60	35	8.0	200	0.75	X014b
DSEI 60-06A	600	60	70	100	550	1.50	70	35	19.0	480	0.75	
DSEI 60-10A	1000	60	60	100	500	1.80	60	35	32.0	480	0.66	
DSEI 60-12A	1200	52	60	100	500	2.00	60	40	32.0	480	0.66	
DSEI 120-06A	600	126	70	100	600	1.12	70	35	17.0	200	0.35	X014b
DSEI 120-12A	1200	109	60	100	600	1.55	70	40	25.0	200	0.35	
DSEK 60-02A	200	2x 34	115	50	325	0.85	30	35	4.0	100	1.00	X014a
DSEK 60-02AR	200	2x 34	115	50	325	0.85	30	35	4.0	100	1.00	X016a
DSEK 60-06A	600	2x 30	85	50	300	1.40	37	35	10.0	240	1.00	X014a
DSEK 60-12A	1200	2x 26	85	50	200	2.20	30	40	16.0	240	0.90	
DSEI 2x30-04C	400	2x 30	85	70	300	1.40	30	35	10.0	240	1.25	X027a
DSEI 2x30-06C	600	2x 30	85	70	300	1.40	30	35	10.0	240	1.25	
DSEI 2x30-10B	1000	2x 30	50	70	200	2.00	30	35	16.0	240	1.25	
DSEI 2x30-12B	1200	2x 28	50	70	200	2.20	30	40	16.0	240	1.25	
DSEI 2x31-06P	600	2x 30	85	70	300	1.40	30	35	10.0	240	1.25	X101
DSEI 2x31-12P	1200	2x 28	50	70	200	2.20	30	40	16.0	240	1.25	
DSEI 2x31-04C	400	2x 30	85	70	300	1.40	30	35	10.0	240	1.25	X027a
DSEI 2x31-06C	600	2x 30	85	70	300	1.40	30	35	10.0	240	1.25	
DSEI 2x31-10B	1000	2x 30	50	70	200	2.00	30	35	16.0	240	1.25	
DSEI 2x31-12B	1200	2x 28	50	70	200	2.20	30	40	16.0	240	1.25	
DSEI 2x61-06P	600	2x 60	70	100	550	1.50	60	35	19.0	480	0.70	X101
DSEI 2x61-12P	1200	2x 52	50	100	450	2.15	60	40	32.0	540	0.70	
DSEI 2x61-02A	200	2x 71	85	100	950	0.88	60	35	8.0	200	0.80	X027a
➢ DSEI 2x60-04C	400	2x 60	70	100	550	1.50	60	35	19.0	480	0.70	
DSEI 2x61-04C	400	2x 60	70	100	550	1.50	60	35	19.0	480	0.70	
DSEI 2x61-06C	600	2x 60	70	100	550	1.50	60	35	19.0	480	0.70	
DSEI 2x61-10B	1000	2x 60	50	100	500	1.80	60	35	32.0	480	0.70	
DSEI 2x61-12B	1200	2x 52	50	100	450	2.15	60	40	32.0	480	0.70	
DSEI 2x121-02A	200	2x 123	70	150	1200	0.95	120	35	12.0	200	0.50	X027a
DSEI 2x101-06P	600	2x 96	70	150	1200	1.17	100	40	19.0	200	0.50	X102
DSEI 2x101-12P	1200	2x 91	50	130	900	1.61	100	40	24.0	200	0.50	
DSEI 2x101-06A	600	2x 96	70	150	1200	1.17	100	35	19.0	200	0.50	X027a
DSEI 2x101-12A	1200	2x 91	50	130	900	1.61	100	40	24.0	200	0.50	
DSEI 2x161-02P	200	2x 165	70	270	1200	1.05	200	35	20.0	200	0.29	X102
DSEI 2x161-06P	600	2x 147	70	270	1200	1.40	200	35	45.0	200	0.29	
DSEI 2x161-12P	1200	2x 128	70	270	1200	1.75	200	40	48.0	200	0.29	

Package style

Outline drawings on pages O-30...O-55

X005b **TO-220AC**

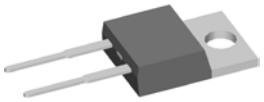

X007b **TO-220ACFP**

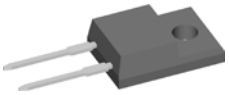

X011b **TO-263AB**

X011c **TO-263AB**

X014a **TO-247AD**

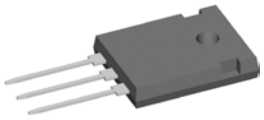

X014b **TO-247AD**

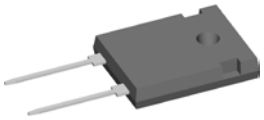

X016a **ISOPLUS247™**

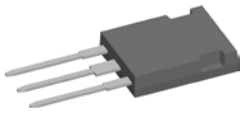

X027a **SOT-227B miniBLOC**

X101 **ECO-PAC 1**

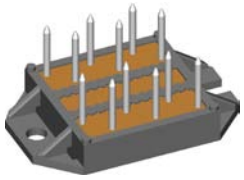

See data sheet for pin arrangement

X102 **ECO-PAC 2**

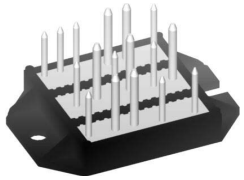

See data sheet for pin arrangement

Data according to IEC 60747 and refer to a single diode or thyristor unless otherwise stated.

FRED & HiPerFRED™ Modules

I_{FAV} = 75 - 582 A

Type	V_{RRM}	I_{FAV}	@ T_C	I_{FRMS}	I_{FSM}	V_F	@ I_F	t_{rr} typ.	I_{RM}	-di/dt	R_{thJC}	P_{tot}	Fig. No.
		d = 0.5			10 ms 45°C	T_{VJ} =125°C		T_{VJ} = 25°C	T_{VJ} = 100°C				
	V	A	°C	A	A	V	A	ns	A	A/µs	K/W	W	
FRED													
MEO 550-02DA	200	582	75	822	4800	1.08	520	150	15	200	0.071	1750	X126d
MEO 500-06DA	600	514	75	726	4800	1.41	520	250	132	800	0.071	1750	
MEO 450-12DA	1200	453	75	640	4800	1.76	520	450	165	800	0.071	1750	
MEK 75-12DA	1200	2x 75	75	107	1200	1.85	100	250	33	200	0.45	280	X125e
MEA 75-12DA	1200	2x 75											
MEE 75-12DA	2x 1200	75											
MEK 95-06DA	600	2x 95	75	142	1200	1.36	100	250	21	200	0.45	280	
MEA 95-06DA	600	2x 95											
MEE 95-06DA	2x 600	95											
MEK 250-12DA	1200	2x 260	75	367	2400	1.54	260	450	83	400	0.143	875	X126c
MEA 250-12DA	1200	2x 260											
MEE 250-12DA	2x 1200	260											
MEK 300-06DA	600	2x 304	75	430	2400	1.19	260	250	66	400	0.143	875	
MEA 300-06DA	600	2x 304											
MEE 300-06DA	2x 600	304											
MEK 350-02DA	200	2x 356	75	503	2400	0.92	260	150	15	200	0.143	875	
HiPerFRED™													
MEK 150-04DA	400	2x 150	100	200	1200	1.40*	300	300	11	100	0.35	360	X125e
MEK 600-04DA	400	2x 575	80	800	3000	1.10	400	220	80	900	0.11	1100	X126c
MPK 95-06DA	600	2x 95	110	200	1200	1.40	100	35	5.5	100	0.575	215	X125e

* T_{VJM} = 150°C

Package style

Outline drawings on pages O-30...O-55

X125e **TO-240**

X126c **Y4**

X126d **Y4**

Diode connections for Fig. X125 (TO-240)

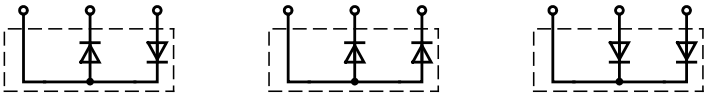

MEE MEA MEK / MPK

Diode connections for Fig. X126 (Y4: 34 mm package)

MEO MEE MEK MEA

SemiFast Diodes

I_{FAV} = 60 A

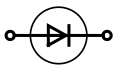

DSDI...

Type	V_{RRM}	I_{FAV}	@ T_C	I_{FRMS}	I_{FSM}	V_F	@ I_F	t_{rr} typ.	I_{RM}	-di/dt	R_{thJC}	Fig. No.
		d = 0.5			10 ms 45°C	T_{VJ} = 125°C		T_{VJ} = 25°C	T_{VJ} = 100°C			
	V	A	°C	A	A	V	A	ns	A	A/µs	K/W	
DSDI 60-14A	1400	63	60	100	500	4.1	70	300	60	500	0.4	X014b
DSDI 60-16A	1600											
DSDI 60-18A	1800											

X014b **TO-247AD**

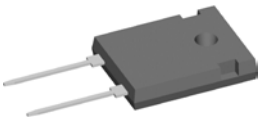

Data according to IEC 60747 and refer to a single diode or thyristor unless otherwise stated.

Rectifier Diodes

I_{FAV} = 2 - 150 A,
Std. (DS..,DL/MA..) & Avalanche (DSA..)

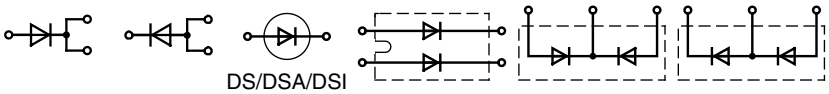

DNA...EM... DLA...IM... DS/DSA/DSI DMA...E... DLA...I... DSI 2x... DSIK DSP

Type ➢ New	V_{RRM} V	I_{FAV} A	@ T_C °C	P_{RSM} kW	I_{FRMS} A	I_{FSM} 10 ms 45°C A	V_{F0} V	r_F mΩ	T_{VJM} °C	R_{thJC} K/W	R_{thCH} K/W	Fig. No.
DSA 1-12D	1200	2.3	T_{amb} 45	1.6	7	110	0.80	67.0	150	R_{thJA} 80		X201
DSA 1-16D	1600											
DSA 1-18D	1800											
DLA 5P800UC	2x 800	5	140	-	10	40	0.74	44.0	175	5.50	0.50	X004
DSP 8-08S	2x 800	11	100	-	17	100	0.80	40.0	180	3.50	0.60	X011b
DSP 8-12S	2x 1200											
DSP 8-08A	2x 800											X005a
DSP 8-12A	2x 1200											
DSP 8-08AS	2x 800											X011a
DSP 8-12AS	2x 1200											
DSP 8-12AC	2x 1200	11	100	-	17	100	0.80	41.0	150	1.80	0.60	X010a
DSP 25-12A	2x 1200	25	135	-	40	300	0.86	13.0	175	0.90	0.25	X014a
DSP 25-16A	2x 1600											
DSP 25-12AT	2x 1200										0.15	X019
DSP 25-16AT	2x 1600											
DSP 25-16AR	2x 1600	28	100	-	43	300	0.80	15.0	180	1.50	0.40	X016a
DSP 45-12A	2x 1200	45	130	-	70	480	0.85	9.0	175	0.55	0.25	X014a
➢ DSP 45-12AZ											0.15	X019a
DSP 45-16A	2x 1600										0.25	X014a
➢ DSP 45-16AZ											0.15	X019a
DSP 45-16AR	2x 1600	43	100	-	70	480	0.80	11.0	150	0.70	0.20	X016a
DLA 10IM800UC	800	10	100	-	16	80	0.80	22.0	175	3.15	0.50	X004
DMA 10I1600PA	1600	10	150	-	25	120	0.82	37.0	175	1.50	0.50	X005b
➢ DMA 10P1600PZ	1600	10	150	-	25	120	0.82	37.0	175	1.50	0.50	X011c
DLA 20IM800PC	800	20	100	-	31	200	0.80	19.0	175	1.80	0.25	X011b
DSI 30-08A	800	30	125	-	35	300	0.85	13.0	150	1.00	0.50	X005b
DSI 30-12A	1200											
DSI 30-16A	1600											
DSI 30-08AS	800	30	100	-	35	300	0.85	13.0	150	1.00	0.50	X011b
DSI 30-12AS	1200											
DSI 30-16AS	1600											
DSI 30-08AC	800	30	95	-	35	200	0.80	15.0	150	1.10	0.60	X010b
DMA 30E1800HA	1800	30	140	-	70	370	0.88	12.1	175	0.70	0.25	X014b
DNA 30E2200FE	2200	30	100	-	70	370	0.88	12.2	175	1.35	0.20	X024e
➢ DNA 30ER2200IY	2200	30	140	-	35	370	0.88	12.9	175	0.70	0.50	X008b
DNA 30E2200PA												X005b
➢ DNA 30E2200PZ											0.25	X011c
➢ DNA 30EM2200PZ												
DLA 40IM800PC	800	40	130	-	35	300	0.81	8.0	175	0.80	0.25	X011b
DSI 45-08A	800	45	130	-	70	480	0.85	9.0	175	0.55	0.25	X014b
DSI 45-12A	1200											
DSI 45-16A	1600											
DSI 45-16AR	1600	48	105	-	70	475	0.80	8.0	150	0.55	0.20	X016b
DSIK 45-16AR	1600	2x 45	100	-	70	475	0.80	8.0	150	0.65	0.20	X016a
DSI 2x55-12A	1200	2x 56	80	-	120	650	0.80	8.0	150	0.65	0.10	X027a
DSI 2x55-16A	1600											
DLA 60I1200HA	1200	60	150	-	70	850	0.77	4.2	175	0.30	0.25	X014b
DMA 150E1600NA	1600	150	90	-	150	3000	0.83	2.0	150	0.25	0.10	X027a

Package style

Outline drawings on pages O-30...O-55

X201

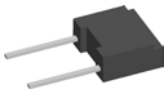

X004 **TO-252AA**

X005a **TO-220AB**

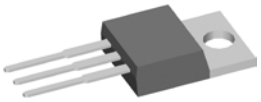

X008b **TO-262AA (I²-PAK)**

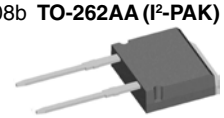

X005b **TO-220AC**

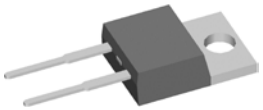

X010a **ISOPLUS220™**

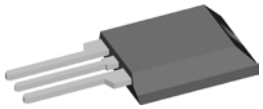

X010b **ISOPLUS220™**

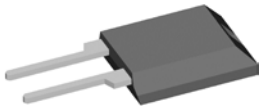

X011a **TO-263AA**

X011b **TO-263AB**

X011c **TO-263AB**

X014a **TO-247AD**

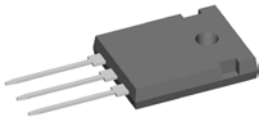

X014b **TO-247AD**

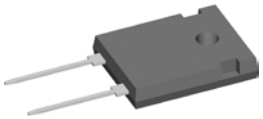

X019a **TO-268AA**

X016a **ISOPLUS247™**

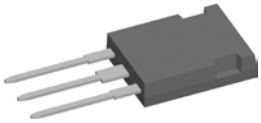

X027a **SOT-227B miniBLOC**

X024e **ISOPLUS i4-PAC™**

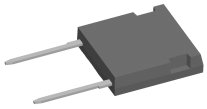

X016b **ISOPLUS247™**

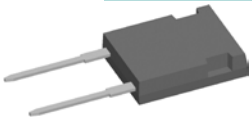

Data according to IEC 60747 and refer to a single diode or thyristor unless otherwise stated.

Rectifier Diodes

I_{FAV} = 3 - 110 A, Standard Diodes (DS..), Avalanche Diodes (DSA..)

DSI/DSAI..

DS/DSA..

Type ➢ New	V_{RRM} V	I_{FAV} A	@ T_C °C	P_{RSM} kW	I_{FRMS} A	I_{FSM} 10 ms 45°C A	V_{F0} V	r_F mΩ	T_{VJM} °C	R_{thJC} K/W	R_{thCH} K/W	Symbol	Fig. No.
DS 2-08A	800	3.6	T_{amb} 45	-	7	120	0.85	43.0	180	R_{thJA} 30			X200
DS 2-12A	1200												
DSA 2-12A	1200			2.5	7	120	0.85	43.0	180				
DSA 2-16A	1600												
DSA 2-18A	1800												
DSA 9-12F	1200	11	100	4.5	18	250	0.85	15.0	180	2.00	1.00		X204
DSA 9-16F	1600												
DSA 9-18F	1800												
DS 17-08A	800	25	125	-	40	370	0.85	8.0	180	1.50	0.60		X205
DS 17-12A	1200			7	40	370	0.85	8.0	180	1.50	0.60		
DSA 17-12A	1200	25	125										
DSA 17-16A	1600												
DSA 17-18A	1800												
DSI 17-08A	800	25	125	-	40	370	0.85	8.0	180	1.50	0.60		X205
DSI 17-12A	1200												
DSAI 17-12A	1200	25	100	7	40	370	0.85	8.0	180	1.50	0.60		
DSAI 17-16A	1600												
DSAI 17-18A	1800												
DS 35-08A	800	49	100	-	80	650	0.85	4.5	180	1.05	0.20		X206a
DS 35-12A	1200												
DSA 35-12A	1200	49	100	11	80	650	0.85	4.5	180	1.05	0.20		
DSA 35-16A	1600												
DSA 35-18A	1800												
DSI 35-08A	800	49	100	-	80	650	0.85	4.5	180	1.05	0.20		X206a
DSI 35-12A	1200												
DSAI 35-12A	1200	49	100	11	80	650	0.85	4.5	180	1.05	0.20		
DSAI 35-16A	1600												
DSAI 35-18A	1800												
DS 75-08B	800	110	100	-	160	1400	0.75	2.0	180	0.50	0.40		X207
DS 75-12B	1200												
DSA 75-12B	1200	110	100	20	160	1400	0.75	2.0	180	0.50	0.40		
DSA 75-16B	1600												
DSA 75-18B	1800												
DSI 75-08B	800	110	100	-	160	1400	0.75	2.0	180	0.50	0.40		
DSI 75-12B	1200												
DSAI 75-12B	1200	110	100	20	160	1400	0.75	2.0	180	0.50	0.40		
DSAI 75-16B	1600												
DSAI 75-18B	1800												

Package style

Outline drawings on pages O-30...O-55

X200 **Metal-can**

X204 **DO-203AA (DO-4)** M5

X205 **DO-203AA (DO-4)** 10-32 UNF

X206a **DO-203AB (DO-5)**

X207 **DO-203AB (DO-5)**

X209 **TO-208AC (TO-48)**

X210 **TO-208AC (TO-65)**

Phase Control Thyristors

I_{TAV} = 25 - 63 A

Type	V_{RRM} V_{DRM} V	I_{TAV} T_C = 85°C A	$I_{T(RMS)}$ A	I_{TSM} 45°C 10 ms A	$(dv/dt)_{cr}$ V/µs	V_{T0} V	r_T mΩ	T_{VJM} °C	R_{thJC} K/W	R_{thCH} K/W	Fig. No.
CS 23-08io2	800	25	50	450	1000	1.00	10.0	125	1.00	0.60	X209
CS 23-12io2	1200										
CS 23-16io2	1600										
CS 35-08io4	800	63	120	1200	1000	0.85	3.5	125	0.40	0.20	X210
CS 35-12io4	1200										
CS 35-14io4	1400										

Data according to IEC 60747 and refer to a single diode or thyristor unless otherwise stated.

Phase Control Thyristors

Thyristors are very rugged devices. Compared to all other controlled semiconductor components, they feature the highest current capacity per chip area especially at high voltage. They are mainly used as control devices in 50 and 60 Hz AC mains equipment. Principal applications are static converter circuits for speed control of DC-drives, or switching and control functions for temperature, lighting, soft-start, etc. in single-phase and three-phase AC switch configurations. Phase control thyristors are designed for optimal forward conduction and reverse blocking characteristics, due to only moderate requirements for turn-on and turn-off parameters.

Phase Control Thyristors

I_{TAV} = 5 - 100 A

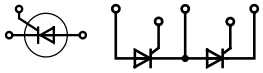

CS... CLA/CMA...P...

Type	V_{RRM} V_{DRM}	I_{TAV}	@ T_C	$I_{T(RMS)}$	I_{TSM} 45°C 10 ms	$(dv/dt)_{cr}$	V_{T0}	r_T	T_{VJM}	R_{thJC}	R_{thCH}	Fig. No.	Package style
➢ New	V	A	°C	A	A	V/µs	V	mΩ	°C	K/W	K/W		Outline drawings on pages O-30...O-55
CLA 5E1200UC	1200	5	125	8	50	500	0.90	85.0	150	2.50	0.50	X004	
CNA 10E2500FB	2500	10	100	16	120	2500	0.97	30.0	125	1.50	0.15	X024c	
CS 19-08ho1	800	19	85	29	160	500	0.85	27.0	125	1.00	0.25	X005a	
CS 19-12ho1	1200												
CS 19-08ho1S	800											X011b	
CS 19-12ho1S	1200												
CS 20-12io1	1200	19	85	30	200	1000	1.10	40.0	125	0.62	0.20	X014a	
CS 20-14io1	1400												
CS 20-16io1	1600												
CS 20-22moF1	2200	18	85	28	200	2500	0.97	17.0	125	0.92	0.15	X024c	
CS 20-25mo1F	2500												
CS 20-25moT1	2500	18	85	28	200	2500	0.97	17.0	125	0.80	0.15	X019	
CS 22-08io1M	800	22	85	35	300	500	0.90	18.0	150	2.50	0.50	X007a	
CS 22-12io1M	1200												
CLA 30E1200PB	1200	30	115	35	300	500	0.86	13.2	150	0.65	0.50	X005a	
CLA 30E1200PC												X011b	
CLA 30E1200HB	1200	30	120	70	300	500	0.86	12.5	150	0.55	0.25	X014a	
➢ CLB 30I1200HB *													
CMA 30E1600PB	1600	30	115	50	260	500	0.92	18.0	150	0.75	0.50	X005a	
➢ CMA 30E1600PZ	1600	30	115	50	260	500	0.92	18.0	150	0.75	0.25	X011c	
CMA 30E1600PN	1600	30	40							2.50	0.50	X007a	
CMA 30P1600FC	2x 1600	30	90	47	300	1000	0.90	13.8	150	1.05	0.25	X024a	
CS 30-12io1	1200	31	85	49	300	1000	0.90	15.0	125	0.62	0.20	X014a	
CS 30-14io1	1400												
CS 30-16io1	1600												
CLA 40P1200FC	1200	40	95	63	550	1000	0.86	7.9	150	0.80	0.20	X024a	
CS 45-08io1	800	45	105	70	520	1000	0.90	10.7	140	0.30	0.25	X014a	
CS 45-12io1	1200												
CS 45-16io1	1600												
CS 45-16io1R	1600	48	75	75	520	1000	0.85	11.0	140	0.62	0.20	X016a	
CLA 50E1200HB	1200	50	125	70	550	1000	0.88	7.7	150	0.25	0.25	X014a	
CLA 50E1200TC	1200	50	125	70	550	1000	0.88	7.7	150	0.25	0.15	X019	
➢ CMA 50E1600TZ	1600	50	110	70	550	1000	0.83	9.6	150	0.40	0.15	X019a	
CMA 50P1600FC	2x 1600	50	90	79	800	1000	0.92	6.3	150	0.65	0.25	X024a	
CS 60-12io1	1200	48	105	75	1500	1000	0.85	3.7	140	0.32	0.15	X015a	
CS 60-14io1	1400												
CS 60-16io1	1600												
CLA 80E1200HF	1200	80	115	70	900	1000	0.88	6.3	150	0.20	0.25	X015a	
➢ CMA 80E1600HB	1600	80	115	70	720	1000	0.90	6.4	150	0.20	0.25	X014a	

* Anode gated

X005a **TO-220AB**

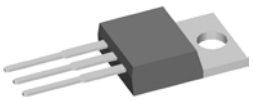

X007a **TO-220ABFP**

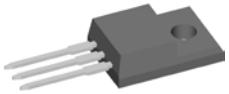

X011b **TO-263AB**

X011c **TO-263AB**

X014a **TO-247AD**

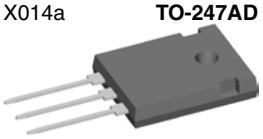

X015a **PLUS247**

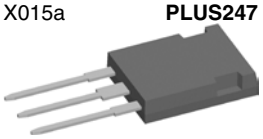

X016a **ISOPLUS247™**

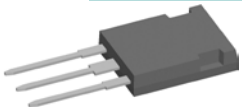

X024c **ISOPLUS i4-PAC™**

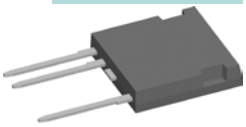

X024a **ISOPLUS i4-PAC™**

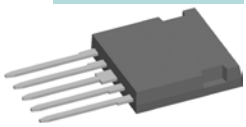

X019a **TO-268AA**

X019 **TO-268AA**

Data according to IEC 60747 and refer to a single diode or thyristor unless otherwise stated.

One of the essential advantages of power semiconductor modules compared to discrete designs is the electrical isolation between the baseplate of the module and the parts subject to voltage (3.6 - 4.8 kV_{RMS} tested). This makes possible the mount-down of any number of the same or different modules on a common heatsink. It is feasible to use standard housings with appropriate accessories for designing compact power converter operating from AC mains up to 690 V.

Plastic Housing with DCB Substrate

IXYS has succeeded in simplifying the conventional multilayer module con-struction by the DCB (Direct Copper Bonding) technique.

Other features are:

- top-side electrical terminals with captured nuts;
- series-connected diode/diode, thyristor/ diode and thyristor/thyristor modules;
- easy assembly.

All thyristor modules with DCB ceramic base contacts are available in volume with two standardized twin plugs (2.8 mm x 0.8 mm) for gate and auxiliary cathode control terminals (version 1). Modules in TO-240 housing of the version 8 are delivered with gate plugs only (without auxiliary cathode terminal; mounting srews available on request). The module housing is designed for adequate clearance and creepage distance resulting in UL recognition by Underwriters Laboratories, Inc., USA for all types.

New Generation Silicon Chips

All chips are designed by applying separation diffusion processes such that the zones responsible for the surface field strength are located at the upper chip side. This results in the capability of soldering the entire chip area onto the DCB ceramic substrate without a molybdenum strain buffer, which in turn leads to good stability of the chips as well as to large area heat dissipation if a load is applied. All zones at the edges which are decisive for the blocking stability are coated with passivation glasses the coefficient of expansion of which match that of silicon. Silicon chips increasingly use planar technology with guard rings and channel stoppers to reduce electrical surface fields. This chip design supercedes the design of thyristor chips which were fabricated with passivation moats so that modules of the new series designed with the updated state-of-the-art utilize planar passivated chips processed by separation diffusion techniques. The contact areas of the chips possess physical vapor deposited metal layers. For the user the improved properties are:

- Excellent long-term stability of blocking currents and blocking voltages,
- increased life time of the internal soldered connections,
- high power cycling capability (≥ 50 000).

The thyristor/diode chips have been optimized with regard to their turn-off parameters: decreasing the carrier lifetime results in reduced stored charges QS, which in turn significantly reduces requirements for RC-snubbers for over-voltage protection. Cost reduction and improved efficiency are the benefits of these characteristics. By re-developing the silicon chips, improvements of the firing characteristics were achieved by specifying a higher „gate current not to fire“ IGD resulting in substantially less suscepibility to misfiring. This leads to greater safety of operation and higher reliability of the equipment.

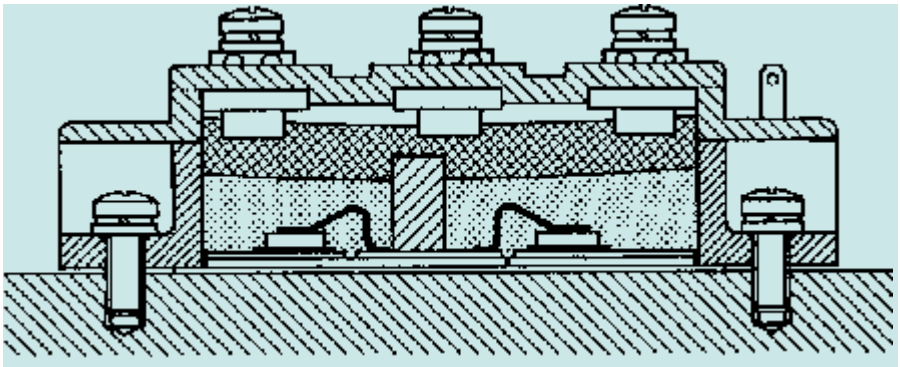

Fig. 1: Principal cross section of an IXYS module with DCB technology

Diode Modules, Dual

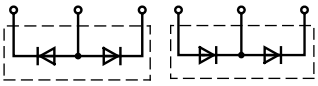

MDA... MDD... MDMA..P..

I_{FAV} = 25 - 224 A

Type ➢ New	V_{RRM} V	I_{FAV} A	T_C °C	I_{FSM} 45°C 10 ms A	V_{F0} V	r_F mΩ	T_{VJM} °C	R_{thJC} K/W	R_{thCH} K/W	Fig. No.	Package style Outline drawings on pages O-30...O-55
➢ **MDMA 25P1200TG**	1200	25	100	320	0.83	11.00	150	1.10	0.20	X125e	
➢ **MDMA 25P1600TG**	1600										
MDD 26-08N1B	800	36	100	650	0.80	6.10	150	1.00	0.20		
MDD 26-12N1B	1200										
MDD 26-14N1B	1400										
MDD 26-16N1B	1600										
MDD 26-18N1B	1800										
➢ **MDMA 35P1200TG**	1200	35	100	500	0.82	7.30	150	0.90	0.20		
➢ **MDMA 35P1600TG**	1600										
MDD 44-08N1B	800	59	100	1150	0.80	4.30	150	0.59	0.20		
MDD 44-12N1B	1200										
MDD 44-14N1B	1400										X125e **TO-240AA**
MDD 44-16N1B	1600										
MDD 44-18N1B	1800										
➢ **MDMA 50P1200TG**	1200	50	100	850	0.82	5.50	150	0.65	0.20		
➢ **MDMA 50P1600TG**	1600										
MDD 56-08N1B	800	71	100	1400	0.80	3.00	150	0.51	0.20		
MDD 56-12N1B	1200										
MDD 56-14N1B	1400										
MDD 56-16N1B	1600										
MDD 56-18N1B	1800										
➢ **MDMA 65P1200TG**	1200	65	100	1100	0.81	4.30	150	0.50	0.20		
➢ **MDMA 65P1600TG**	1600										
MDD 72-08N1B	800	99	100	1700	0.80	2.30	150	0.35	0.20		
MDD 72-12N1B	1200										
MDD 72-14N1B	1400										
MDD 72-16N1B	1600										
MDD 72-18N1B	1800										
➢ **MDMA 85P1200TG**	1200	85	100	1500	0.80	3.20	150	0.35	0.20		
➢ **MDMA 85P1600TG**	1600										
MDD 95-08N1B	800	120	105	2800	0.75	1.95	150	0.26	0.20		
MDD 95-12N1B	1200										
MDD 95-14N1B	1400										
MDD 95-16N1B	1600										
MDD 95-18N1B	1800										
MDD 95-20N1B	2000										
MDD 95-22N1B	2200										
MDA 95-22N1B	2200										
➢ **MDMA 110P1200TG**	1200	110	100	1900	0.79	2.80	150	0.30	0.20		
➢ **MDMA 110P1600TG**	1600										
➢ **MDMA 140P1200TG**	1200	140	100	2800	0.78	2.20	150	0.23	0.20		X126c **Y4**
➢ **MDMA 140P1600TG**	1600										
➢ **MDMA 140P1800TG**	1800										
➢ **MDNA 140P2200TG**	2200										
MDD 142-08N1	800	165	100	4700	0.80	1.30	150	0.21	0.10	X126c	
MDD 142-12N1	1200										
MDD 142-14N1	1400										
MDD 142-16N1	1600										
MDD 142-18N1	1800										
MDD 172-08N1	800	190	100	6600	0.80	0.80	150	0.21	0.10		
MDD 172-12N1	1200										
MDD 172-14N1	1400										
MDD 172-16N1	1600										
MDD 172-18N1	1800										
MDD 200-14N1	1400	224	100	10500	0.80	0.60	150	0.13	0.10		
MDD 200-16N1	1600										
MDD 200-18N1	1800										
MDD 200-22N1	2200										

Data according to IEC 60747 and refer to a single diode or thyristor unless otherwise stated.

Diode Modules, Single and Dual

I_{FAV} = 175 - 700 A

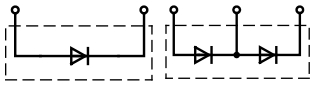

MDO... MDD... MDMA..P..

Type ➢ New	V_{RRM} V	I_{FAV} A	T_C °C	I_{FSM} 45°C 10 ms A	V_{F0} V	r_F mΩ	T_{VJM} °C	R_{thJC} K/W	R_{thCH} K/W	Fig. No.
MDD 175-28N1	2800	175	100	4500	0.90	1.80	150	0.140	0.07	X131c
MDD 175-34N1	3400									
➢ **MDMA 200P1600SA**	1600	200	85	6000	0.96	1.38	150	0.140	0.075	X141c
MDD 220-08N1	800	270	100	8500	0.75	0.90	150	0.129	0.04	X129c
MDD 220-12N1	1200									
MDD 220-14N1	1400									
MDD 220-16N1	1600									
MDD 220-18N1	1800									
MDD 250-08N1	800	290	100	11000	0.75	0.75	150	0.129	0.04	
MDD 250-12N1	1200									
MDD 250-14N1	1400									
MDD 250-16N1	1600									
MDD 255-12N1	1200	270	100	9500	0.80	0.60	150	0.140	0.04	X131c
MDD 255-14N1	1400									
MDD 255-16N1	1600									
MDD 255-18N1	1800									
MDD 255-20N1	2000									
MDD 255-22N1	2200									
MDD 310-08N1	800	305	100	11500	0.75	0.63	150	0.129	0.04	X129c
MDD 310-12N1	1200									
MDD 310-14N1	1400									
MDD 310-16N1	1600									
MDD 310-18N1	1800									
MDD 310-20N1	2000									
MDD 310-22N1	2200									
MDD 312-12N1	1200	310	100	10500	0.80	0.60	150	0.120	0.04	X131c
MDD 312-14N1	1400									
MDD 312-16N1	1600									
MDD 312-18N1	1800									
MDD 312-20N1	2000									
MDD 312-22N1	2200									
➢ **MDMA 380P1600KC**	1600	380	100	11000	0.75	0.53	140	0.110	0.04	
MDO 500-12N1	1200	560	85	15000	0.80	0.38	140	0.072	0.02	X132b
MDO 500-14N1	1400									
MDO 500-16N1	1600									
MDO 500-18N1	1800									
MDO 500-20N1	2000									
MDO 500-22N1	2200									
MDO 600-16N1	1600	608	85	15000	0.80	0.38	140	0.072	0.02	
MDMA 700P1600CC	1600	700	100	20000	0.76	0.32	150	0.060	0.02	X142c

Package style

Outline drawings on pages O-30...O-55

X129c **Y2**

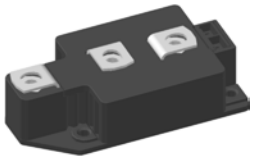

X131c **Y1**

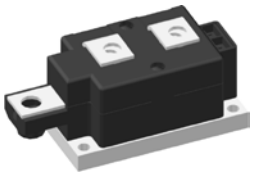

X132b **Y1**

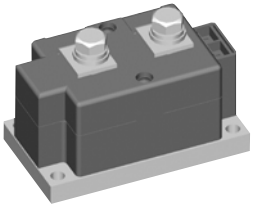

X141c **SimBus A**

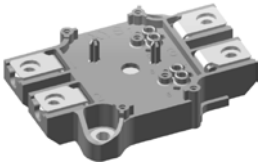

X142c **ComPack**

For more single and dual diode modules with higher current, please see pages 139 and 140.

Data according to IEC 60747 and refer to a single diode or thyristor unless otherwise stated.

Thyristor / Diode Modules

I_{TAV} = 25 - 85 A

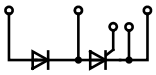

MCD...io1
MCMA..PD..

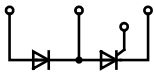

MCD...io8/...io6
CLA/CMA..PD..

Type ➢ New	V_{RRM} V_{DRM} V	I_{TAV} A	T_C °C	$I_{T(RMS)}$ A	I_{TSM} 45°C 10 ms A	V_{T0} V	r_T mΩ	T_{VJM} °C	R_{thJC} K/W	R_{thCH} K/W	Fig. No.	Package style Outline drawings on pages O-30...O-55
➢ **MCMA 25PD1200TB**	1200	25	82	40	400	0.87	13.0	140	1.20	0.2	X125b	
➢ **MCMA 25PD1600TB**	1600											
MCD 26-08io1B	800	27	85	50	520	0.85	11.0	125	0.88	0.2		
MCD 26-12io1B	1200											
MCD 26-14io1B	1400											
MCD 26-16io1B	1600											
MCD 26-08io8B	800	27	85	50	520	0.85	11.0	125	0.88	0.2	X125d	X027a **SOT-227B miniBLOC**
MCD 26-12io8B	1200											
MCD 26-14io8B	1400											
MCD 26-16io8B	1600											
➢ **MCMA 35PD1200TB**	1200	35	85	55	520	0.87	9.8	140	0.90	0.2	X125b	
➢ **MCMA 35PD1600TB**	1600											
MCD 40-12io6	1200	38	85	60	500	0.85	9.5	125	0.60	0.1	X027a	
MCD 40-16io6	1600											
MCD 44-08io1B	800	49	85	80	1150	0.85	5.3	125	0.53	0.2	X125b	
MCD 44-12io1B	1200											
MCD 44-14io1B	1400											
MCD 44-16io1B	1200											
MCD 44-18io1B	1600											X125b **TO-240AA**
MCD 44-08io8B	800	49	85	80	1150	0.85	5.3	125	0.53	0.2	X125d	
MCD 44-12io8B	1200											
MCD 44-14io8B	1400											
MCD 44-16io8B	1600											
MCD 44-18io8B	1800											
➢ **MCMA 50PD1200TB**	1200	50	85	79	800	0.89	5.3	140	0.70	0.2	X125b	
➢ **MCMA 50PD1600TB**	1600											
CLA 60PD1200NA	1200	60	100	94	1100	0.79	4.8	150	0.55	0.1	X027a	
MCD 56-08io1B	800	60	85	100	1500	0.85	3.7	125	0.45	0.2	X125b	
MCD 56-12io1B	1200											X125d **TO-240**
MCD 56-14io1B	1400											
MCD 56-16io1B	1600											
MCD 56-18io1B	1800											
MCD 56-08io8B	800	60	85	100	1500	0.85	3.7	125	0.45	0.2	X125d	
MCD 56-12io8B	1200											
MCD 56-14io8B	1400											
MCD 56-16io8B	1600											
MCD 56-18io8B	1800											
➢ **MCMA 65PD1200TB**	1200	65	85	105	1150	0.85	4.8	140	0.50	0.2	X125b	
➢ **MCMA 65PD1600TB**	1600											
CMA 80PD1600NA	1600	80	80	126	1150	0.86	5.5	150	0.45	0.1	X027a	
MCD 72-08io1B	800	85	85	180	1700	0.85	3.2	125	0.30	0.2	X125b	
MCD 72-12io1B	1200											
MCD 72-14io1B	1400											
MCD 72-16io1B	1600											
MCD 72-18io1B	1800											

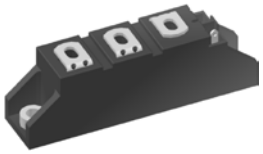

Data according to IEC 60747 and refer to a single diode or thyristor unless otherwise stated.

Thyristor / Diode Modules

I_{TAV} = 85 - 250 A

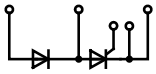

MCD...io1
MCMA..PD..

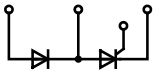

MCD...io8
CLA..PD..

Type ➢ New	V_{RRM} V_{DRM} V	I_{TAV} A	T_C °C	$I_{T(RMS)}$ A	I_{TSM} 45°C 10 ms A	V_{T0} V	r_T mΩ	T_{VJM} °C	R_{thJC} K/W	R_{thCH} K/W	Fig. No.	Package style Outline drawings on pages O-30...O-55
MCD 72-08io8B	800	85	85	180	1700	0.85	3.20	125	0.300	0.200	X125d	X027a **SOT-227B miniBLOC**
MCD 72-12io8B	1200											
MCD 72-14io8B	1400											
MCD 72-16io8B	1600											
MCD 72-18io8B	1800											
➢ **MCMA 85PD1200TB**	1200	85	85	1500	135	0.85	3.90	140	0.380	0.200	X125b	
➢ **MCMA 85PD1600TB**	1600											
CLA 100PD1200NA	1200	100	85	150	1500	0.83	3.70	150	0.350	0.100	X027a	
MCD 94-20io1B	2000	104	85	180	1700	0.85	3.20	125	0.220	0.200	X125b	
MCD 94-22io1B	2200											
MCD 95-08io1B	800	116	85	180	2250	0.8	2.40	125	0.220	0.200		X125b **TO-240AA**
MCD 95-12io1B	1200											
MCD 95-14io1B	1400											
MCD 95-16io1B	1600											
MCD 95-18io1B	1800											
MCD 95-08io8B	800	116	85	180	2250	0.8	2.40	125	0.220	0.200	X125d	
MCD 95-12io8B	1200											
MCD 95-14io8B	1400											
MCD 95-16io8B	1600											X125d **TO-240**
MCD 95-18io8B	1800											
➢ **MCMA 110PD1200TB**	1200	110	85	170	1900	0.85	3.30	140	0.300	0.200	X125b	
➢ **MCMA 110PD1600TB**	1600											
➢ **MCNA 120PD2200TB**	2200	120	85	190	1700	0.90	0.70	140	0.220	0.200		
MCD 132-08io1	800	130	85	300	4750	0.8	1.50	125	0.230	0.100	X126b	
MCD 132-12io1	1200											
MCD 132-14io1	1400											
MCD 132-16io1	1600											X126b **Y4**
MCD 132-18io1	1800											
➢ **MCMA 140PD1200TB**	1200	140	85	200	2400	0.85	2.80	140	0.220	0.200	X125b	
➢ **MCMA 140PD1600TB**	1600											
MCD 161-20io1	2000	165	85	300	6000	0.8	1.60	125	0.155	0.070	X126b	
MCD 161-22io1	2200											
MCD 162-08io1	800	181	85	300	6000	0.88	1.15	125	0.155	0.070		
MCD 162-12io1	1200											
MCD 162-14io1	1400											
MCD 162-16io1	1600											X141b **SimBus A**
MCD 162-18io1	1800											
MCMA 200PD1600SA	1600	200	85	300	6000	0.94	1.56	140	0.150	0.075	X141b	
MCD 200-14io1	1400	216	85	340	8000	0.80	1.00	125	0.130	0.050	X126b	
MCD 200-16io1	1600											
MCD 200-18io1	1800											

Data according to IEC 60747 and refer to a single diode or thyristor unless otherwise stated.

Thyristor / Diode Modules

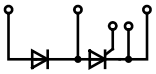

MCD...io1
MCMA..PD..

I_{TAV} = 240 - 700 A

Type ➢ New	V_{RRM} V_{DRM} V	I_{TAV} A	T_C °C	$I_{T(RMS)}$ A	I_{TSM} 45°C 10 ms A	V_{T0} V	r_T mΩ	T_{VJM} °C	R_{thJC} K/W	R_{thCH} K/W	Fig. No.	Package style Outline drawings on pages O-30...O-55
MCD 220-08io1	800	250	85	400	8500	0.90	1.00	140	0.139	0.04	X129b	
MCD 220-12io1	1200											X126b **Y4**
MCD 220-14io1	1400											
MCD 220-16io1	1600											
MCD 224-20io1	2000	240	85	400	8000	0.8	0.76	130	0.139	0.04	X131b	
MCD 224-22io1	2200											
MCD 225-12io1	1200	221	85	400	8000	0.8	0.76	130	0.157	0.04	X131b	
MCD 225-14io1	1400											
MCD 225-16io1	1600											X129b **Y2**
MCD 225-18io1	1800											
MCD 250-08io1	800	287	85	450	9000	0.85	0.82	140	0.129	0.04	X129b	
MCD 250-12io1	1200											
MCD 250-14io1	1400											
MCD 250-16io1	1600											
MCD 250-18io1	1800											
MCD 255-12io1	1200	250	85	450	9000	0.8	0.68	130	0.140	0.04	X131b	
MCD 255-14io1	1400											X131b **Y1**
MCD 255-16io1	1600											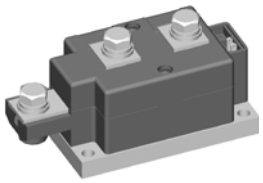
MCD 255-18io1	1800											
MCMA 260PD1600YB	1600	260	85	400	8300	0.8	1.00	140	0.130	0.08	X126b	
MCMA 265PD1600KB	1600	260	85	408	8500	0.8	0.75	140	0.160	0.04	X131b	
MCD 310-08io1	800	320	85	500	9200	0.8	0.82	140	0.112	0.04	X129b	
MCD 310-12io1	1200											
MCD 310-14io1	1400											
MCD 310-16io1	1600											X142a **ComPack**
MCD 310-18io1	1800											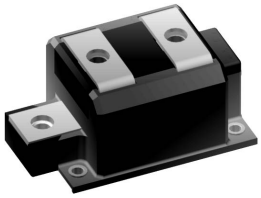
MCD 310-20io1	2000	320	85	500	8000	0.8	0.82	140	0.112	0.04		
MCD 310-22io1	2200											
MCD 312-12io1	1200	320	85	520	9200	0.8	0.68	140	0.120	0.04	X131b	
MCD 312-14io1	1400											
MCD 312-16io1	1600											
MCD 312-18io1	1800											
➢ **MCMA 700PD1600CB**	1600	700	85	1100	1900	0.82	0.40	140	0.05	0.02	X142a	

For more thyristor / diode modules with higher current, please see pages 138 and 140.

Data according to IEC 60747 and refer to a single diode or thyristor unless otherwise stated.

Thyristor Modules, Dual

I_{TAV} = 18 - 60 A

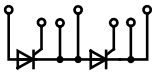

MCC...io1B
MCMA..P..

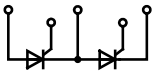

MCC...io8B

Type ➢ New	V_{RRM} V_{DRM} V	I_{TAV} A	T_C °C	$I_{T(RMS)}$ A	I_{TSM} 45°C 10 ms A	V_{T0} V	r_T mΩ	T_{VJM} °C	R_{thJC} K/W	R_{thCH} K/W	Fig. No.	Package style Outline drawings on pages O-30...O-55
MCC 19-08io1B	800	18	85	40	400	0.85	18	125	1.30	0.2	X125a	
MCC 19-12io1B	1200											
MCC 19-14io1B	1400											
MCC 19-16io1B	1600											
MCC 19-08io8B	800	18	85	40	400	0.85	18	125	1.30	0.2	X125c	
MCC 19-12io8B	1200											
MCC 19-14io8B	1400											
MCC 19-16io8B	1600											
MCC 21-08io8B	800	21	85	33	320	0.85	15	125	1.10	0.2	X125c	
MCC 21-12io8B	1200											
MCC 21-14io8B	1400											
MCC 21-16io8B	1600											X125a **TO-240AA**
➢ **MCMA 25P1200TA**	1200	25	85	40	400	0.87	13	140	1.20	0.2	X125a	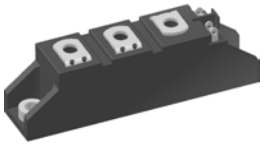
➢ **MCMA 25P1600TA**	1600											
MCC 26-08io1B	800	27	85	50	520	0.85	11	125	0.88	0.2		
MCC 26-12io1B	1200											
MCC 26-14io1B	1400											
MCC 26-16io1B	1600											
MCC 26-08io8B	800	27	85	50	520	0.85	11	125	0.88	0.2	X125c	
MCC 26-12io8B	1200											
MCC 26-14io8B	1400											
MCC 26-16io8B	1600											
➢ **MCMA 35P1200TA**	1200	35	85	55	520	0.87	9.8	140	0.90	0.2	X125a	
➢ **MCMA 35P1600TA**	1600											
➢ **MCNA 40P2200TA**	2200	40	85	63	500	0.84	11.4	140	0.70	0.2		
MCC 44-08io1B	800	49	85	80	1150	0.85	5.3	125	0.53	0.2		
MCC 44-12io1B	1200											X125c **TO-240**
MCC 44-14io1B	1400											
MCC 44-16io1B	1600											
MCC 44-18io1B	1800											
MCC 44-08io8B	800	49	85	80	1150	0.85	5.3	125	0.53	0.2	X125c	
MCC 44-12io8B	1200											
MCC 44-14io8B	1400											
MCC 44-16io8B	1600											
MCC 44-18io8B	1800											
➢ **MCMA 50P1200TA**	1200	50	85	79	800	0.89	5.3	140	0.70	0.2	X125a	
➢ **MCMA 50P1600TA**	1600											
MCC 56-08io1B	800	60	85	100	1500	0.85	3.7	125	0.45	0.2		
MCC 56-12io1B	1200											
MCC 56-14io1B	1400											
MCC 56-16io1B	1600											
MCC 56-18io1B	1800											
MCC 56-08io8B	800	60	85	100	1500	0.85	3.7	125	0.45	0.2	X125c	
MCC 56-12io8B	1200											
MCC 56-14io8B	1400											
MCC 56-16io8B	1600											
MCC 56-18io8B	1800											

Data according to IEC 60747 and refer to a single diode or thyristor unless otherwise stated.

Thyristor Modules, Dual

I_{TAV} = 65 - 181 A

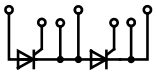

MCC...io1B
MCMA..P..

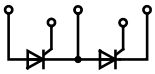

MCC...io8B

Type ➢ New	V_{RRM} V_{DRM} V	I_{TAV} A	T_C °C	$I_{T(RMS)}$ A	I_{TSM} 45°C 10 ms A	V_{T0} V	r_T mΩ	T_{VJM} °C	R_{thJC} K/W	R_{thCH} K/W	Fig. No.	Package style Outline drawings on pages O-30...O-55
➢ **MCMA 65P1200TA**	1200	65	85	105	1.15	0.85	4.80	140	0.50	0.2	X125a	
➢ **MCMA 65P1600TA**	1600											
MCC 72-08io1B	800	85	85	180	1700	0.85	3.20	125	0.30	0.2		X125a **TO-240AA**
MCC 72-12io1B	1200											
MCC 72-14io1B	1400											
MCC 72-16io1B	1600											
MCC 72-18io1B	1800											
MCC 72-08io8B	800	85	85	180	1700	0.85	3.20	125	0.30	0.2	X125c	
MCC 72-12io8B	1200											
MCC 72-14io8B	1400											
MCC 72-16io8B	1600											
MCC 72-18io8B	1800											
➢ **MCMA 85P1200TA**	1200	85	85	135	1500	0.85	3.90	140	0.38	0.2	X125a	
➢ **MCMA 85P1600TA**	1600											
MCC 94-20io1B	2000	104	85	180	1700	0.85	3.20	125	0.22	0.2		
MCC 94-22io1B	2200											
MCC 94-24io1B	2400											
MCC 95-08io1B	800	116	85	180	2250	0.8	2.40	125	0.22	0.2		X125c **TO-240**
MCC 95-12io1B	1200											
MCC 95-14io1B	1400											
MCC 95-16io1B	1600											
MCC 95-18io1B	1800											
MCC 95-08io8B	800	116	85	180	2250	0.8	2.40	125	0.22	0.2	X125c	
MCC 95-12io8B	1200											
MCC 95-14io8B	1400											
MCC 95-16io8B	1600											
MCC 95-18io8B	1800											
➢ **MCMA 110P1200TA**	1200	110	85	170	1900	0.85	3.30	140	0.30	0.2	X125a	
➢ **MCMA 110P1600TA**	1600											
➢ **MCNA 120P2200TA**	2200	120	85	190	1700	0.90	3.70	140	0.22	0.2		
➢ **MCMA 140P1200TA**	1200	140	85	220	2400	0.85	2.80	140	0.22	0.2		X126a **Y4**
➢ **MCMA 140P1400TA**	1400											
MCMA 140P1600TA	1600											
➢ **MCMA 140P1800TA**	1800											
MCC 132-08io1	800	130	85	300	4750	0.8	1.50	125	0.23	0.1	X126a	
MCC 132-12io1	1200											
MCC 132-14io1	1400											
MCC 132-16io1	1600											
MCC 132-18io1	1800											
MCC 161-20io1	2000	165	85	300	6000	0.8	1.60	125	0.155	0.07		
MCC 161-22io1	2200											
MCC 162-08io1	800	181	85	300	6000	0.88	1.15	125	0.155	0.07		
MCC 162-12io1	1200											
MCC 162-14io1	1400											
MCC 162-16io1	1600											
MCC 162-18io1	1800											

Data according to IEC 60747 and refer to a single diode or thyristor unless otherwise stated.

Thyristor Modules, Dual

I_{TAV} = 200 - 700 A

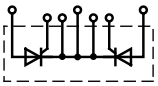

MCK...

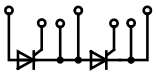

MCC...io1B
MCMA..P..

Type ➢ New	V_{RRM} V_{DRM} V	I_{TAV} A	T_C °C	$I_{T(RMS)}$ A	I_{TSM} 45°C 10 ms A	V_{T0} V	r_T mΩ	T_{VJM} °C	R_{thJC} K/W	R_{thCH} K/W	Fig. No.	Package style Outline drawings on pages O-30...O-55
MCMA 200P1600SA	1600	200	85	300	6000	0.94	1.56	140	0.150	0.075	X141a	
MCC 200-14io1	1400	216	85	340	8000	0.8	1.00	125	0.130	0.05	X126a	
MCC 200-16io1	1600											X126a **Y4**
MCC 200-18io1	1800											
MCK 200-18io1	1800	216	85	340	8000	0.8	1.00	125	0.130	0.05		
MCC 220-08io1	800	250	85	400	8500	0.9	1.00	140	0.139	0.04	X129a	
MCC 220-12io1	1200											
MCC 220-14io1	1400											
MCC 220-16io1	1600											
MCC 220-18io1	1800											X129a **Y2**
MCC 224-20io1	2000	240	85	400	8000	0.8	0.76	130	0.139	0.04	X131a	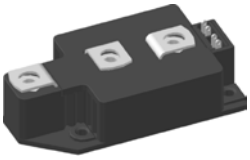
MCC 224-22io1	2200											
MCC 224-24io1	2400											
MCC 225-12io1	1200	221	85	400	8000	0.8	0.76	130	0.157	0.04		
MCC 225-14io1	1400											
MCC 225-16io1	1600											
MCC 225-18io1	1800											X131a **Y1**
MCC 250-08io1	800	287	85	450	9000	0.85	0.82	140	0.129	0.04	X129a	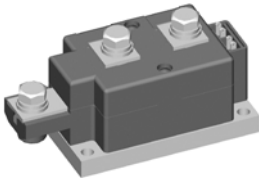
MCC 250-12io1	1200											
MCC 250-14io1	1400											
MCC 250-16io1	1600											
MCC 250-18io1	1800											
MCC 255-12io1	1200	250	85	450	9000	0.8	0.68	130	0.14	0.04	X131a	
MCC 255-14io1	1400											
MCC 255-16io1	1600											X141a **SimBus A**
MCC 255-18io1	1800											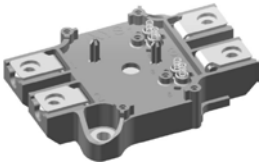
MCMA 260P1600YA	1600	260	85	400	8300	0.8	1.00	140	0.13	0.08	X126a	
MCMA 265P1600KA	1600	260	85	408	8500	0.8	0.75	140	0.16	0.04	X131a	
MCC 310-08io1	800	320	85	500	9200	0.8	0.82	140	0.112	0.04	X129a	
MCC 310-12io1	1200											
MCC 310-14io1	1400											
MCC 310-16io1	1600											
MCC 310-18io1	1800											X142a **ComPack**
MCC 312-12io1	1200	320	85	520	9200	0.8	0.68	140	0.12	0.04	X131a	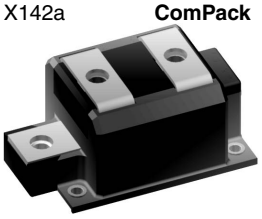
MCC 312-14io1	1400											
MCC 312-16io1	1600											
MCC 312-18io1	1800											
➢ **MCMA700P1600CA**	1600	700	85	1100	19000	0.82	0.40	140	0.05	0.02	X142a	

For more dual thyristor modules with higher current, please see pages 137 and 140.

Data according to IEC 60747 and refer to a single diode or thyristor unless otherwise stated.

Thyristor Modules, Single

I_{TAV} = 31 - 830 A

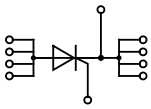

VCO...

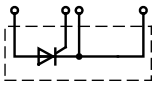

MCO

Type ➢ New	V_{RRM} V_{DRM} V	I_{TAV} A	T_C °C	$I_{T(RMS)}$ A	I_{TSM} 45°C 10 ms A	V_{T0} V	r_T mΩ	T_{VJM} °C	R_{thJC} K/W	R_{thCH} K/W	Fig. No.
MCO 25-12io1	1200	31	80	49	370	0.85	14.0	150	1.100	0.50	X027a
MCO 25-16io1	1600										
MCO 50-12io1	1200	54	80	85	740	0.90	5.80	150	0.720	0.40	
MCO 50-16io1	1600										
MCO 75-12io1	1200	77	80	121	1070	0.85	5.50	150	0.450	0.20	
MCO 75-16io1	1600										
MCO 100-12io1	1200	99	80	156	1400	0.85	4.50	150	0.350	0.15	
MCO 100-16io1	1600										
MCO 150-12io1	1200	149	80	234	2000	0.80	3.80	150	0.200	0.10	
MCO 150-16io1	1600										
MCO 450-20io1	2000	464	85	750	15000	0.77	0.42	130	0.072	0.02	X132a
MCO 450-22io1	2200										
MCO 500-12io1	1200	560	85	880	17000	0.80	0.38	140	0.072	0.02	
MCO 500-14io1	1400										
MCO 500-16io1	1600										
MCO 500-18io1	1800										
MCO 600-16io1	1600	600	85	928	15000	0.77	0.42	140	0.065	0.02	
MCO 600-18io1	1800										
MCO 600-20io1	2000										
MCO 600-22io1	2200										
VCO 132-08io7	800	130	85	200	3600	0.80	1.65	150	0.25	0.10	X102
VCO 132-12io7	1200										
VCO 132-14io7	1400										
VCO 132-16io7	1600										
VCO 132-18io7	1800										
VCO 180-08io7	800	180	90	280	4500	0.75	1.23	150	0.17	0.06	
VCO 180-12io7	1200										
VCO 180-14io7	1400										
VCO 180-16io7	1600										
VCO 180-18io7	1800										

Package style

Outline drawings on pages O-30...O-55

X027a **SOT-227B miniBLOC**

X102 **ECO-PAC 2**

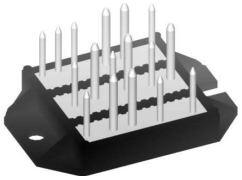

See data sheet for pin arrangement

X132a **Y1**

X126a **Y4**

For more single thyristor modules with higher current, please see page 137.

Data according to IEC 60747 and refer to a single diode or thyristor unless otherwise stated.

Optional Accessories for Thyristor / Diode Modules

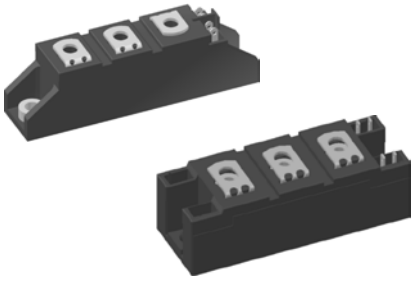

For module types MCC/MCD/MCO/MCMA 132, 161,162, 200, 220, 224, 225, 250, 255, 260, 265, 310, 312, 500, 501, 700 and MII 400 (for MCD/MCO only L-type):
Keyed Gate Cathode twin plugs with wire length = 350 mm
gate = yellow, cathode = red

Type **ZY 180 L** (L = Left for pin pair 4/5)
Type **ZY 180 R** (R = Right for pin pair 6/7)

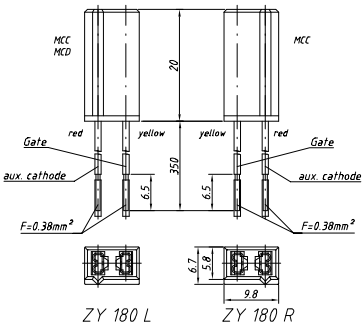

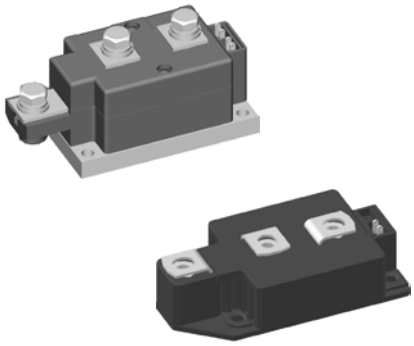

For module-types MCC/MCMA 19, 25, 26, 35, 40, 44, 50, 56, 65, 72, 85, 94, 95, 110, 120 and 140 version 1:
Keyed Gate Cathode twin plugs with wire length = 350 mm;
gate = yellow, cathode = red

Type **ZY 200 L** (L = Left for pin pair 4/5)
Type **ZY 200 R** (R = Right for pin pair 6/7)

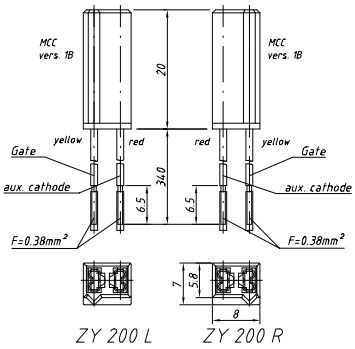

For ZY 180 and ZY 200: UL Styles 1385

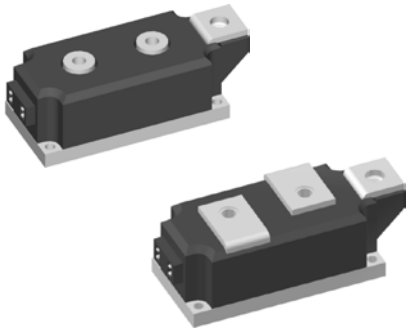

For module types MCC/MCD/MDD 220, 250, 310
Threaded spacer for higher Anode / Cathode construction:

Type **ZY 250** (material brass)

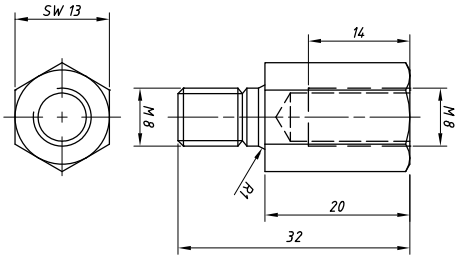

Design Information

For Thyristors, Diodes, Thyristor / Diode Modules and Rectifier Bridges

Surge current

The 60 Hz value of I_{TSM} is 10% higher than the 50 Hz value
The I_{TSM} value at T_{VJM} is 10% to 15% lower than the 45°C value

Limiting I^2t

50 Hz: I^2t [A^2s] = I_{TSM} [A] • I_{TSM} [A] • 0.005 [s]; use rated I_{TSM} value (10 ms)
60 Hz: I^2t [A^2s] = I_{TSM} [A] • I_{TSM} [A] • 0.0042 [s]; use 60-Hz-value of I_{TSM}

Forward current

The average current ratings in tables are mostly specified for temperature conditions of: T_A = 45°C, T_C = 85°C or T_C = 100°C.
For other temperature conditions the current ratings can be calculated using the following formulas applicable up to 400 Hz.

$$I_{TAV} = \frac{-V_{T0} + \sqrt{V_{T0}^2 + 4 \bullet k^2 \bullet r_T \bullet P}}{2 \bullet k^2 \bullet r_T} \quad \text{where} \quad P = \frac{T_{VJM} - T_C}{R_{thJC}} \quad \text{or} \quad P = \frac{T_{VJM} - T_A}{R_{thJA}}$$

I_{TAV} [A], P [W]; V_{T0} [V]; r_T [Ω], T_{VJM} [°C], T_C [°C], T_A [°C], R_{thJC} [K/W], R_{thJA} [K/W]

k^2 = 1 for DC current
k^2 = 2.5 for sinusoidal half wave current
k^2 = 3 for 120° rectangular current
k^2 = 6 for 60° rectangular current

The average forward current is limited by the RMS current value $I_{T(RMS)}$.
When the **calculated** value I_{TAV} is higher than $I_{T(RMS)}$ / k, replace it by I_{TAV} = $I_{T(RMS)}$ / k.

Data according to IEC 60747 and refer to a single diode or thyristor unless otherwise stated.

Rectifier Bridges with Fast Diodes

1-phase, B2U

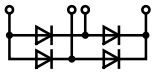

Type ➢ New	V_{RRM} V	I_{dAV} A	@ T_C °C	I_{FSM} 45°C 10 ms A	V_{F0} V	r_F mΩ	T_{VJM} °C	R_{thJC} K/W	R_{thCH} K/W	Fig. No.	Package style Outline drawings on pages O-30...O-55
VBE 17-06NO7	600	27	85	50	1.18	22.0	150	2.50	0.30	X101	X024a **ISOPLUS i4-PAC™**
VBE 17-12NO7	1200	19	85	40	1.32	30.0	150	2.50	0.30		
VBE 20-20NO1	2000	20	65	75	3.30	93.0	150	1.70	0.30	X103	
VBE 26-06NO7	600	44	85	110	1.13	13.0	150	1.60	0.30	X101	
VBE 26-12NO7	1200	32	85	90	1.32	30.0	150	1.60	0.30		
VBE 55-06NO7	600	68	100	250	0.98	8.0	150	0.90	0.30		X027a **SOT-227B miniBLOC**
VBE 55-12NO7	1200	59	85	200	1.31	15.0	150	0.90	0.30		
VBE 60-06A	600	60	90	250	0.98	6.8	150	1.15	0.10	X027a	
➢ **DPG60B600LB**	600	60	110	250	0.84	19.6	175	1.10	0.40	X030a	
FBE 22-06N1	600	22	115	50	1.04	24.0	175	3.00	0.20	X024a	
VBE 100-06NO7	600	100	85	600	1.09	4.3	150	0.80	0.20	X102	
VBE 100-12NO7	1200	100	70	500	1.07	8.2	150	0.80	0.20		
FBS 10-06SC*	600	6.6	90	12	-	-	175	8.00	3.50	X024a	X030a **SMPD-B**
FBS 16-06SC*	600	11	90	20	-	-	175	5.60	3.00		
➢ **FBS 10-12SC***	1200	9	80	100	-	-	175	7.00	3.50		

* SiC-Diodes

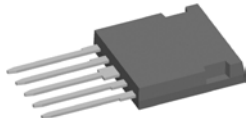

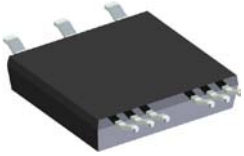

3-phase, B6U

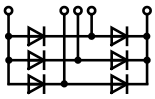

FUS 45-0045B	45	45	130	150	0.30	14.8	150	3.00	0.20	X024a
➢ **DHG 60U1200LB**	1200	62	80	200	-	-	150	1.10	0.75	X030a
VUE 50-12NO1	1200	50	85	200	1.65	18.2	150	1.20	0.30	X103
VUE 30-20NO1	2000	30	65	75	3.30	93.0	150	1.70	0.30	
VUE 22-06NO7	600	34	85	50	1.18	22.0	150	2.50	0.30	X101
VUE 22-12NO7	1200	24	85	40	1.39	55.0	150	2.50	0.30	
VUE 35-06NO7	600	56	85	110	1.13	13.0	150	1.60	0.30	
VUE 35-12NO7	1200	40	85	90	1.32	30.0	150	1.60	0.30	
VUE 75-06NO7	600	86	100	250	0.98	8.0	150	0.90	0.30	
VUE 75-12NO7	1200	74	85	200	1.31	15.0	150	0.90	0.30	
FUE 30-12N1	1200	30	120	90	0.97	48.0	175	2.30	0.20	X024a
VUE 130-06NO7	600	130	85	600	1.09	4.3	150	0.80	0.20	X102
VUE 130-12NO7	1200	130	70	500	1.07	8.2	150	0.80	0.20	

X101 **ECO-PAC 1**

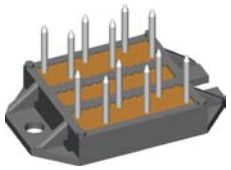

See data sheet for pin arrangement

X102 **ECO-PAC 2**

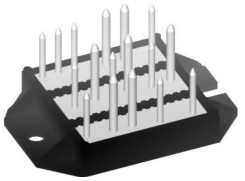

See data sheet for pin arrangement

X103 **V1-A-Pack**

Rectifier Bridges incorporating Fast Diodes

Power switching semiconductors are used in inverter systems with DC-Link. Due to high switching frequencies, harmonics and line distortion may be generated. It is important that the new designs reduce these influences and fulfill the EMI filtering requirements according to EMI/EMC VDE 0871 and other.

The noise level can be reduced by up to **10dB** when the input rectifier is equipped with semi-fast diodes and is therefore optimised for turn off; resulting in a lower peak recovery current compared to non-optimised and normal rectifier diodes.

The noise level can be further reduced approximetely by another **5dB** when using rectifier bridges equipped with Fast Recovery Epitaxial Diodes (FRED) like module types VBE (single phase bridge) or VUE (three phase bridge). However these are more expensive but may be necessary in some applications to fulfill the VDE or other standards.

This behaviour has a direct influence on the design of the EMI filter networks with its capacitors and inductors of which the size and costs can be reduced.

More detailed information is available in the IXYS application note D98005E „Input Rectifiers with Semi-fast Diodes for DC Link“ on www.ixys.com.

1~ Rectifier Bridges

1~ Rectifier Bridges with Avalanche Diodes, B2U

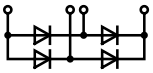

Type	V_{RRM} V	V_{vRMS} V	I_{dAV} A	@ T_C °C	I_{FSM} 45°C 10 ms A	V_{F0} V	r_F mΩ	T_{VJM} °C	R_{thJC} K/W	R_{thJH} K/W	P_{RSM} kW	Fig. No.
VBO 13-12AO2	1200	400	18	85	220	0.85	17.0	150	5.60	6.00	2.5	X115
VBO 13-16AO2	1600	500										
VBO 20-12AO2	1200	400	31	85	300	0.85	14.0	150	3.00	3.40	3.4	
VBO 20-16AO2	1600	500										
VBO 25-12AO2	1200	400	38	85	370	0.85	8.0	150	2.80	3.20	3.4	
VBO 25-16AO2	1600	500										

1~ Rectifier Bridges with Standard Diodes, B2U

VBO 13-08NO2	800	250	18	85	220	0.85	17.0	150	5.60	6.00	-	X115
VBO 13-12NO2	1200	400										
VBO 13-16NO2	1600	500										
FBO 16-12N	1200	400	20	130	150	0.81	32	175	3.00	5.00	-	X024a
VBO 20-08NO2	800	250	31	85	300	0.85	14.0	150	3.00	3.40	-	X115
VBO 20-12NO2	1200	400										
VBO 20-16NO2	1600	500										
VBO 21-08NO7	800	250	20	115	120	0.84	28.8	150	2.50	2.90	-	X101
VBO 21-12NO7	1200	400										
VBO 22-08NO8	800	250	17	85	380	0.85	12.0	150	8.20	9.40	-	X116b
VBO 22-12NO8	1200	400										
VBO 22-16NO8	1600	500										
VBO 22-18NO8	1800	575										
GBO 25-12NO1	1200	400	25	80	370	0.89	12.2	150	4.30	4.80	-	X025a
GBO 25-16NO1	1600	500										
VBO 25-08NO2	800	250	38	85	370	0.85	8.0	150	2.80	3.20	-	X115
VBO 25-12NO2	1200	400										
VBO 25-16NO2	1600	500										
VBO 30-08NO7	800	250	35	85	400	0.85	12.0	150	2.80	3.40	-	X119b
VBO 30-12NO7	1200	400										
VBO 30-16NO7	1600	500										
VBO 30-18NO7	1800	575										
VBO 36-08NO8	800	250	23	85	550	0.80	5.8	150	6.20	7.40	-	X116b
VBO 36-12NO8	1200	400										
VBO 36-16NO8	1600	500										
VBO 36-18NO8	1800	575										
FBO 40-12N	1200	400	40	130	300	0.79	14.0	175	1.50	1.70	-	X024a
VBO 40-08NO6	800	250	40	100	300	0.80	13.0	150	1.70	2.00	-	X027a
VBO 40-12NO6	1200	400										
VBO 40-16NO6	1600	500										
VBO 50-08NO7	800	250	50	64	750	0.85	8.0	150	2.60	2.84	-	X120b
VBO 50-12NO7	1200	400										
VBO 50-16NO7	1600	500										
VBO 50-18NO7	1800	575										
VBO 52-08NO7	800	250	60	115	550	0.78	8.1	150	1.10	1.50	-	X122b
VBO 52-12NO7	1200	400										
VBO 52-16NO7	1600	500										
VBO 52-18NO7	1800	575										
VBO 54-08NO7	800	250	55	105	300	0.82	12.2	150	1.10	1.50	-	X101
VBO 54-12NO7	1200	400										
VBO 54-16NO7	1600	500										
VBO 68-08NO7	800	250	70	105	550	0.81	7.8	150	0.90	1.30	-	X101
VBO 68-12NO7	1200	400										
VBO 68-16NO7	1600	500										
VBO 72-08NO7	800	250	70	110	750	0.78	6.0	150	0.90	1.30	-	X122b
VBO 72-12NO7	1200	400										
VBO 72-16NO7	1600	500										
VBO 72-18NO7	1800	575										

Package style

Outline drawings on pages O-30...O-55

X024a **ISOPLUS i4-PAC™**

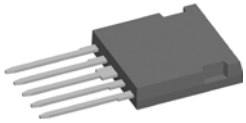

X025a **GBFP**

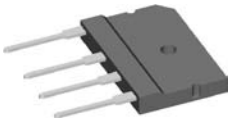

X027a **SOT-227B miniBLOC**

X101 **ECO-PAC 1**

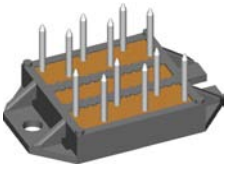

See data sheet for pin arrangement

X115 FO-A

X116b FO-B

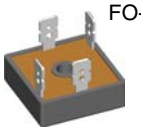

X119b **PWS-A**

X120b **PWS-B**

X122b **PWS-D**

Data according to IEC 60747 and refer to a single diode or thyristor unless otherwise stated.

1~ Rectifier Bridges

1~ Rectifier Bridges with Standard Diodes, B2U

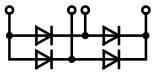

Type ➢ New	V_{RRM} V	V_{vRMS} V	I_{dAV} A	@ T_C °C	I_{FSM} 45°C 10 ms A	V_{F0} V	r_F mΩ	T_{VJM} °C	R_{thJC} K/W	R_{thJH} K/W	Fig. No.
VBO 78-08NO7	800	250	80	115	750	0.81	5.9	150	0.70	1.00	X102
VBO 78-12NO7	1200	400									
VBO 78-16NO7	1600	500									
VBO 88-08NO7	800	250	90	115	1000	0.80	4.6	150	0.6	0.90	
VBO 88-12NO7	1200	400									
VBO 88-16NO7	1600	500									
➢ **DLA 100B1200LB**	1200	400	124	80	400	0.75	4.2	175	1.00	1.45	X030a
VBO 105-08NO7	800	250	107	85	1500	0.80	5.0	150	0.83	1.13	X121b
VBO 105-12NO7	1200	400									
VBO 105-16NO7	1600	500									
VBO 125-08NO7	800	250	124	85	1800	0.80	3.0	150	0.83	1.13	
VBO 125-12NO7	1200	400									
VBO 125-16NO7	1600	500									
VBO 130-08NO7	800	250	122	100	1800	0.80	3.0	150	0.65	0.83	X123e
VBO 130-12NO7	1200	400									
VBO 130-16NO7	1600	500									
VBO 130-18NO7	1800	575									
VBO 160-08NO7	800	250	174	100	2800	0.80	2.2	150	0.45	0.60	
VBO 160-12NO7	1200	400									
VBO 160-16NO7	1600	500									
VBO 160-18NO7	1800	575									

Package style

Outline drawings on pages O-30...O-55

X030a **SMPD-B**

X101 **ECO-PAC 1**

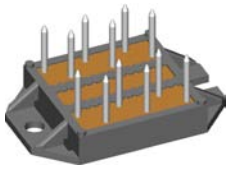

See data sheet for pin arrangement

X102 **ECO-PAC 2**

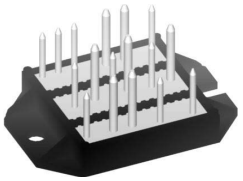

See data data sheet for pin arrangement

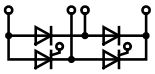

VGO

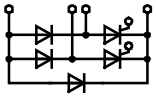

VHF

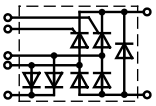

VHFD

Type	V_{RRM} V	V_{vRMS} V	I_{dAV} A	@ T_H °C	I_{TSM} 10 ms, 45°C A	V_{T0} V	r_T mΩ	T_{VJM} °C	R_{thJC} K/W	R_{thJH} K/W	Fig. No.

1~ Half Controlled Rectifier Bridges with free wheeling diode, B2HKF

VHF 15-08io5	800	250	15	85	190	1.00	40.0	125	2.40	3.00	X117a
VHF 15-12io5	1200	400									
VHF 15-14io5	1400	440									
VHF 15-16io5	1600	500									
VHF 25-08io7	800	250	32	T_C = 85°C	200	0.85	27.0	125	1.30	1.80	X101
VHF 25-12io7	1200	400									
VHF 28-08io5	800	250	28	85	300	0.90	15.0	125	1.40	2.00	X117a
VHF 28-12io5	1200	400									
VHF 28-14io5	1400	440									
VHF 28-16io5	1600	500									
VHF 36-08io5	800	250	36	85	320	0.85	13.0	125	1.15	1.55	
VHF 36-12io5	1200	400									
VHF 36-14io5	1400	440									
VHF 36-16io5	1600	500									
VHFD 16-08io1	800	250	16	85	150	1.00	40.0	125	2.40	3.00	X103
VHFD 16-12io1	1200	400									
VHFD 16-16io1	1600	500									
VHFD 29-08io1	800	250	28	85	300	0.90	15.0	125	1.40	2.00	
VHFD 29-12io1	1200	400									
VHFD 29-16io1	1600	500									
VHFD 37-08io1	800	250	36	85	320	0.85	13.0	125	1.20	1.55	
VHFD 37-12io1	1200	400									
VHFD 37-16io1	1600	500									

1~ Half Controlled Rectifier Bridge, B2HZ

VGO 36-16io7	1600	500	36	85	320	0.85	13.0	125	1.40	2.00	X101

X103 **V1-A-Pack**

X117a **FO-F-A**

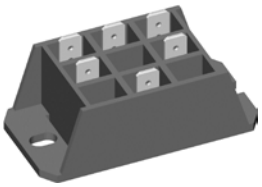

X121b **PWS-C**

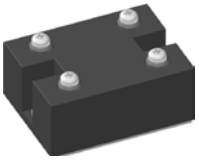

X123e **PWS-E**

Data according to IEC 60747 and refer to a single diode or thyristor unless otherwise stated.

3~ Rectifier Bridges

3~ Rectifier Bridges with Standard Diodes, B6U

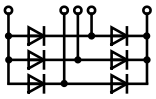

Type ○ Not for new design ➢ New	V_{RRM} V	V_{vRMS} V	I_{dAV} A	@ T_C °C	I_{FSM} 45°C 10 ms A	V_{F0} V	r_F mΩ	T_{VJM} °C	R_{thJC} K/W	R_{thJH} K/W	Fig. No.	Package style Outline drawings on pages O-30...O-55
FUO 22-12N	1200	400	30	120	150	0.81	31.0	175	3.00	3.20	X024a	X024a **ISOPLUS i4-PAC™**
FUO 22-16N	1600	500										
VUO 22-08NO1	800	250	22		100	0.80	40.0	130	-	3.10	X103	
VUO 22-12NO1	1200	400										
VUO 22-14NO1	1400	440	T_H = 90°C									
VUO 22-16NO1	1600	500										
VUO 22-18NO1	1800	575										
VUO 25-08NO8	800	250	20	85	380	0.85	12.0	150	9.30	10.20	X116a	X025b **GUFP**
VUO 25-12NO8	1200	400										
VUO 25-14NO8	1400	440										
VUO 25-16NO8	1600	500										
VUO 25-18NO8	1800	575										
VUO 28-08NO7	800	250	30	105	120	0.84	28.8	150	2.50	2.90	X101	
VUO 28-12NO7	1200	400										
VUO 36-08NO8	800	250	27	85	550	0.80	7.4	150	7.50	8.40	X116a	X101 **ECO-PAC 1**
VUO 36-12NO8	1200	400										
VUO 36-14NO8	1400	440										
VUO 36-16NO8	1600	500										
VUO 36-18NO8	1800	575										
VUO 34-08NO1	800	250	36		300	0.80	15.0	130	-	2.50	X103	See data sheet for pin arrangement
VUO 34-12NO1	1200	400										
VUO 34-14NO1	1400	440	T_H = 90°C									
VUO 34-16NO1	1600	500										X103 **V1-A-Pack**
VUO 34-18NO1	1800	575										
VUO 30-08NO3	800	250	37	85	300	0.90	11.0	125	2.40	3.00	X117b	
VUO 30-12NO3	1200	400										
VUO 30-14NO3	1400	440										
VUO 30-16NO3	1600	500										
VUO 30-18NO3	1800	575										
VUO 35-08NO7	800	250	38	85	400	0.85	12.0	150	4.20	4.80	X119a	X116a **FO-B**
VUO 35-12NO7	1200	400										
VUO 35-14NO7	1400	440										
VUO 35-16NO7	1600	500										
VUO 35-18NO7	1800	575										
GUO 40-08NO1	800	250	40	85	370	0.86	12.9	175	4.30	5.00	X025b	X117b **FO-F-B**
GUO 40-12NO1	1200	400										
GUO 40-16NO1	1600	500										
FUO 50-16N	1600	500	50	120	270	0.78	17	175	2.10	2.30	X024a	
VUO 52-08NO1	800	250	60	110	350	0.83	11.5	150	1.30	1.60	X103	
VUO 52-12NO1	1200	400										
VUO 52-14NO1	1400	440	T_H = 90°C									
VUO 52-16NO1	1600	500										
VUO 52-18NO1	1800	500										X119a **PWS-A**
VUO 52-20NO1	2000	575										
VUO 52-22NO1	2200	690										
VUO 50-08NO3	800	250	58	85	500	0.90	6.0	125	1.62	2.22	X117b	
VUO 50-12NO3	1200	400										
VUO 50-14NO3	1400	440										
VUO 50-16NO3	1600	500										
VUO 50-18NO3	1800	575										
VUO 55-12NO7	1200	400	58	85	750	0.85	8.0	150	2.70	3.06	X120a	X120a **PWS-B**
VUO 55-14NO7	1400	440										
VUO 55-16NO7	1600	500										
VUO 55-18NO7	1800	575										
VUO 60-12NO3	800	250	72	85	600	0.80	6.5	125	1.20	1.60	X117b	
VUO 60-14NO3	1400	440										
VUO 60-16NO3	1600	500										
VUO 60-18NO3	1800	575										

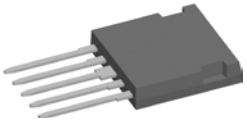

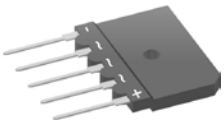

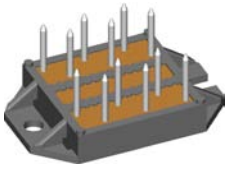

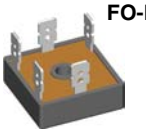

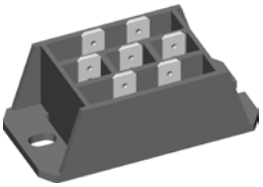

Data according to IEC 60747 and refer to a single diode or thyristor unless otherwise stated.

3~ Rectifier Bridges

3~ Rectifier Bridges with Standard Diodes, B6U

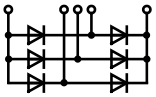

Type ○ Not for new design ➢ New	V_{RRM} V	V_{vRMS} V	I_{dAV} A	@ T_C °C	I_{FSM} 45°C 10 ms A	V_{F0} V	r_F mΩ	T_{VJM} °C	R_{thJC} K/W	R_{thJH} K/W	Fig. No.	Package style Outline drawings on pages O-30...O-55
VUO 62-08NO7	800	250	60	120	550	0.78	8.1	150	1.10	1.50	X122a	X030a **SMPD-B**
VUO 62-12NO7	1200	400										
VUO 62-14NO7	1400	440										
VUO 62-16NO7	1600	500										
VUO 62-18NO7	1800	575										
VUO 64-16NO7	1600	500	60	120	550	0.78	8.1	150	1.10	1.50	X122c	X101 **ECO-PAC 1**
VUO 68-08NO7	800	250	70	105	300	0.82	12.2	150	1.10	1.50	X101	
VUO 68-12NO7	1200	400										
VUO 68-14NO7	1400	440										
VUO 68-16NO7	1600	500										
○ **VUO 70-16NO7**	1600	500	70	100	550	0.80	8.0	150	1.45	1.90	X118d	See data sheet for pin arrangement
VUO 80-08NO1	800	250	82		600	0.80	7.5	150	-	1.42	X103	X102 **ECO-PAC 2**
VUO 80-12NO1	1200	400	T_H = 90°C									
VUO 80-14NO1	1400	440										
VUO 80-16NO1	1600	500										
VUO 80-18NO1	1800	575										
VUO 82-08NO7	800	250	90	115	750	0.78	6.0	150	0.90	1.30	X122a	See data sheet for pin arrangement
VUO 82-12NO7	1200	400										X103 **V1-A-Pack**
VUO 82-14NO7	1400	440										
VUO 82-16NO7	1600	500										
VUO 82-18NO7	1800	575										
VUO 84-16NO7	1600	500	90	115	750	0.78	6.0	150	0.90	1.30	X122c	
VUO 86-08NO7	600	125	90	105	550	0.81	7.8	150	0.90	1.30	X101	X104 **V2-Pack**
VUO 86-12NO7	1200	400										
VUO 86-14NO7	1400	440										
VUO 86-16NO7	1600	500										
➢ **DMA 90U1800LB**	1800	575	99	80	320	-	-	175	1.10	1.50	X030a	
VUO 98-08NO7	800	250	105	115	750	0.81	5.9	150	0.70	1.00	X102	X112 **E2-Pack**
VUO 98-12NO7	1200	400										
VUO 98-14NO7	1400	440										
VUO 98-16NO7	1600	500										
VUO 105-12NO7	1200	400	140	85	1500	0.80	5.0	150	0.83	1.13	X121a	X121a **PWS-C**
VUO 105-14NO7	1400	440										
VUO 105-16NO7	1600	500										
VUO 105-18NO7	1800	575										
VUO 110-08NO7	800	250	125	110	1200	0.79	4.5	150	0.70	1.00	X123c	X122a **PWS-D**
VUO 110-12NO7	1200	400										
VUO 110-14NO7	1400	440										
VUO 110-16NO7	1600	500										
VUO 110-18NO7	1800	575										
➢ **VUO 120-12NO2T**	1200	400	188	80	1100	0.87	4.0	150	0.60	0.80	X104	X122c **PWS-D Flat**
➢ **VUO 120-16NO2T**	1600	500										
VUO 121-16NO1	1600	500	120	105	700	0.80	7.6	150	0.65	0.75	X112	
VUO 122-08NO7	800	250	125	115	1000	0.80	4.6	150	0.60	0.90	X102	
VUO 122-12NO7	1200	400										
VUO 122-14NO7	1400	440										X123c **PWS-E**
VUO 122-16NO7	1600	500										
VUO 125-12NO7	1200	400	166	85	1800	0.80	3.0	150	0.83	1.13	X121a	
VUO 125-14NO7	1400	440										
VUO 125-16NO7	1600	500										
VUO 125-18NO7	1800	575										

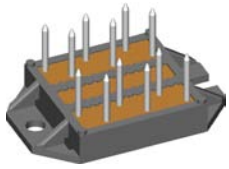
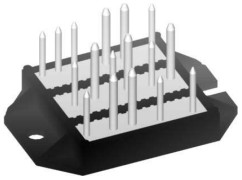

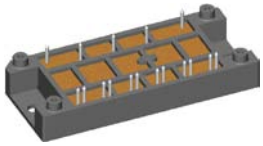

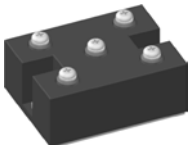

Data according to IEC 60747 and refer to a single diode or thyristor unless otherwise stated.

3~ Rectifier Bridges

DM/NA...YA...

DM/NA...YC...

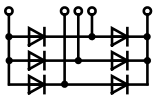
VUO...

3~ Rectifier Bridges with Standard Diodes, B6U

Type ➢ New	V_{RRM} V	V_{vRMS} V	I_{dAV} A	@ T_C °C	I_{FSM} 45°C 10 ms A	V_{F0} V	r_F mΩ	T_{VJM} °C	R_{thJC} K/W	R_{thJH} K/W	Fig. No.	Package style Outline drawings on pages O-30...O-55
➢ **DNA 90YA2200NA** ➢ **DNA 90YC2200NA**	2200	690	90	85	370	0.86	11.4	150	1.20	1.30	X027a	
DMA 150YA1600NA **DMA 150YC1600NA**	1600	500	150	85	700	0.85	5.3	150	0.75	0.85		X027a **SOT-227B miniBLOC**
VUO 160-08NO7	800	250	175	110	1800	0.77	3.4	150	0.50	0.70	X123c	
VUO 160-12NO7	1200	400										
VUO 160-14NO7	1400	440										
VUO 160-16NO7	1600	500										
VUO 160-18NO7	1800	575										
VUO 162-16NO7	1600	500	175	110	1800	0.77	3.4	150	0.50	0.70	X123h	
VUO 190-08NO7	800	250	240	110	2800	0.74	2.4	150	0.40	0.55	X123c	
VUO 190-12NO7	1200	400										
VUO 190-14NO7	1400	440										
VUO 190-16NO7	1600	500										
VUO 190-18NO7	1800	575										
VUO 192-16NO7	1600	500	240	110	2800	0.74	2.4	150	0.40	0.55	X123h	

X103 **V1-A-Pack**

3~ Rectifier Bridges with IGBT and Fast Diode for Brake Unit

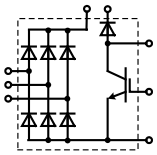

Type ➢ New	Rectifier V_{RRM} V	I_{dAV} A	@ T_C °C	IGBT V_{CES} V	I_{C80} A	Fast Diode V_{RRM} V	$I_{F(AV)}$ A	t_{rr} ns	Fig. No.
VUB 72-12NOXT **VUB 72-16NOXT**	1200 1600	110	80	1200	40	1200	15	130	X103
VUI 72-16NOXT	1600	110	80	1200	40	-	-	-	
VUB 116-16NOXT	1600	116	100	1200	84	1200	27	40	X112
VUB 120-16NOX **VUB 120-16NOXT**	1600	188	80	1200	108	1200	34	40	X104
VUB 135-22NO1	2200	135	100	1700	50	1800	50	40	X112
VUB 145-16NOXT	1600	145	100	1200	108	1200	27	40	
VUB 160-16NOX **VUB 160-16NOXT**	1600	188	80	1200	154	1200	34	40	X104
MDMA240UB1600ED	1600	240	80	1200	108	1200	59	350	X112

X104 **V2-Pack**

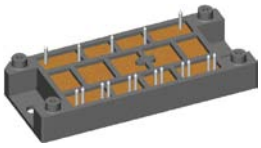

X112 **E2-Pack**

X123c **PWS-E**

3~ Half Controlled Rectifier Bridges

with IGBT and Fast Diode for Brake Unit

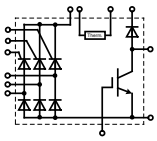

Type ➢ New	Rectifier V_{RRM} V	I_{dAV} A	@ T_C °C	IGBT V_{CES} V	I_{C80} A	Fast Diode V_{RRM} V	$I_{F(AV)}$ A	t_{rr} ns	Fig. No.
VVZB 120-16ioX	1600	120	80	1200	108	1200	27	40	X104
➢ **MCNA120UI2200TED**	2200	120	80	1700	80	1700	50	550	X112
VVZB 135-16ioXT	1600	135	85	1200	84	1200	27	40	
VVZB 170-16ioXT	1600	170	85	1200	108	1200	27	40	
➢ **MCMA240UI1600ED**	1600	240	80	1200	108	1200	59	350	

X123h **PWS-E Flat**

Data according to IEC 60747 and refer to a single diode or thyristor unless otherwise stated.

3~ Rectifier Bridges

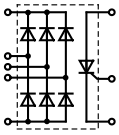
VUC

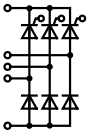
VVZ

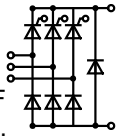
VVZF ..UJ..

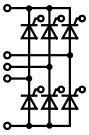
VTO

Type	V_{RRM} V	V_{vRMS} V	I_{dAVM} A	@ T_H °C	$I_{FSM/TSM}$ 10 ms, 45°C A	V_{T0} V	r_T mΩ	T_{VJM} °C	R_{thJC} K/W	R_{thJH} K/W	Fig. No.
3~ Rectifier Bridges with Fast Diodes (t_{rr} = 1.5 ms) & Integrated Softstart Thyristor											
VUC 36-12go2	1200	400	34	85	Dio.	300	1.20	16.0	125	1.40	2.00	X105a
					Thy.	400	0.85	10.0	125	0.90	1.10	
VUC 36-16go2	1600	500	34	85	Dio.	300	1.20	16.0	125	1.40	2.00	
					Thy.	400	0.85	10.0	125	0.90	1.10	

Package style
Outline drawings
on pages O-30...O-55

X101 **ECO-PAC 1**

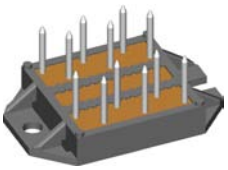

See data sheet for pin arrangement

Type ○ Not for new design	V_{RRM} V	V_{vRMS} V	I_{dAV} T_C = 85°C A	I_{TSM} 10 ms 45°C A	V_{T0} V	r_T mΩ	T_{VJM} °C	R_{thJC} K/W	R_{thJH} K/W	Fig. No.
3~ Half Controlled Rectifier Bridges, B6HK										
VVZ 12-12io1	1200	400	15	110	1.10	30.0	125	2.50	3.10	X105a
VVZ 12-16io1	1600	500	T_H = 100°C							
VVZ 24-12io1	1200	400	21	300	1.00	16.0	125	2.10	2.70	
VVZ 24-16io1	1600	500	T_H = 100°C							
VVZ 39-08ho7	800	250	39	200	0.85	27.0	125	1.30	1.80	X101
VVZ 39-12ho7	1200	400								
VVZ 40-12io1	1200	400	34	320	0.85	15.0	125	1.00	1.60	X105a
VVZ 40-16io1	1600	500	T_H = 100°C							
VVZ 110-12io7	1200	400	110	1150	0.85	6.0	125	0.65	0.80	X123b
VVZ 175-12io7	1200	400	167	1500	0.85	3.5	125	0.46	0.55	
VVZ 175-16io7	1600	500								
3~ Half Controlled Rectifier Bridges with free wheeling diode, B6HKF										
MCMA120UJ1800ED	1800	575	120	500	0.89	13.6	150	0.65	0.75	X112
○ **VVZF 70-16io7**	1600	500	70	550	0.85	11.0	125	0.90	1.10	X118c
3~ Full Controlled Rectifier Bridges, B6C										
VTO 39-08ho7	800	250	39	200	0.85	27.0	125	1.30	1.80	X101
VTO 39-12ho7	1200	400								

X105a **V1-B-Pack**

X112 **E2-Pack**

X118c **FO-T-A**

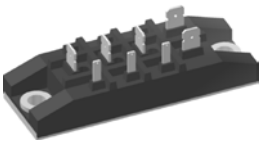

X123b **PWS-E**

Data according to IEC 60747 and refer to a single diode or thyristor unless otherwise stated.

AC Controller 1~ / 2~ / 3~

I_{RMS} = 30 - 230 A

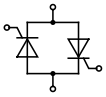
MMO/CLA..MB..

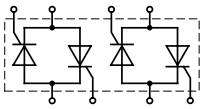
VW 2x..

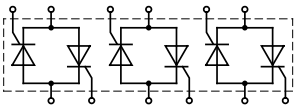
VWO

	Type	V_{RRM}	V_{vRMS}	I_{RMS}	@ T_C	I_{TSM} 10 ms 45°C	V_{T0}	r_T	T_{VJM}	R_{thJC}	R_{thJH}	Fig. No.
	➢ New	V	V	A	°C	A	V	mΩ	°C	K/W	K/W	
1~	**MMO 62-12io6**	1200	400	54	110	400	0.85	12.0	150	0.91	1.01	X027a
	MMO 62-16io6	1600	500									
	MMO 74-12io6	1200	400	74	110	600	0.85	8.4	150	0.71	0.81	
	MMO 74-16io6	1600	500									
	MMO 90-12io6	1200	400	90	110	800	0.90	5.8	150	0.60	0.70	
	MMO 90-14io6	1400	440									
	MMO 90-16io6	1600	500									
	CLA 110MB1200NA	1200	400	110	110	1100	0.78	4.9	150	0.55	0.65	
	MMO 110-08io7	800	250	112	85	1000	0.85	5.6	150	0.80	0.92	X101
	MMO 110-12io7	1200	400									
	MMO 110-14io7	1400	440									
	MMO 140-08io7	800	250	130	85	1150	0.85	5.2	150	0.70	0.82	
	MMO 140-12io7	1200	400									
	MMO 140-16io7	1600	500									
	MMO 175-08io7	800	250	175	85	1500	0.85	3.7	150	0.50	0.62	
	MMO 175-12io7	1200	400									
	MMO 175-16io7	1600	500									
	MMO 230-08io7	800	250	230	85	2250	0.80	2.4	125	0.26	0.46	X102
	MMO 230-12io7	1200	400									
	MMO 230-14io7	1400	440									
	MMO 230-16io7	1600	500									
	MMO 230-18io7	1800	575									
2~	**VW 2x30-12io1**	1200	400	2x 30	85	200	0.80	25.0	125	1.70	2.00	X103
	VW 2x30-14io1	1400	440									
	VW 2x30-16io1	1600	500									
	VW 2x45-12io1	1200	400	2x 45	85	300	0.85	15.0	125	1.25	1.55	
	VW 2x45-14io1	1400	440									
	VW 2x45-16io1	1600	500									
	VW 2x60-12io1	1200	400	2x 60	85	520	0.85	11.0	125	0.92	1.22	
	VW 2x60-14io1	1400	440									
	VW 2x60-16io1	1600	500									
3~	**VWO 35-08ho7**	800	250	3x 35	85	200	0.85	27.0	125	1.30	1.80	X101
	VWO 35-12ho7	1200	400									
	VWO 85-12io1	1200	400	3x 83	85	520	0.85	11.0	150	0.92	1.22	X104
	VWO 85-14io1	1400	440									
	VWO 85-16io1	1600	500									
	VWO 140-12io1	1200	400	3x 143	85	1150	0.85	5.2	150	0.60	0.70	X104
	VWO 140-14io1	1400	440									
	VWO 140-16io1	1600	500									

Package style

Outline drawings on pages O-30...O-55

X027a **SOT-227B miniBLOC**

X101 **ECO-PAC 1**

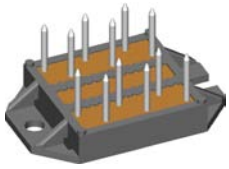

See data sheet for pin arrangement

X102 **ECO-PAC 2**

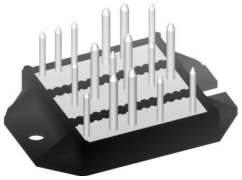

See data sheet for pin arrangement

X103 **V1-A-Pack**

X104 **V2-Pack**

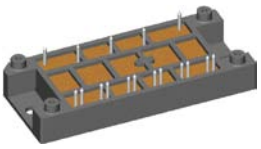

X014a **TO-247AD**

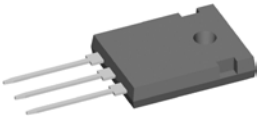

X016c **ISO247**

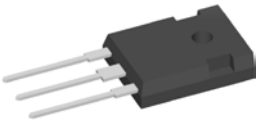

X019a **TO-268AA**

TRIAC 1~

I_{RMS} = 60 A

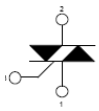

➢ **CLA60MT1200NHB**	1200	400	60	120	300	0.86	12.5	150	0.55	0.25	X014a
➢ **CLA60MT1200NTZ**										0.15	X019a
➢ **CLA60MT1200NHR**									0.90	0.25	X016c

Data according to IEC 60747 and refer to a single diode or thyristor unless otherwise stated.

1~ / 3~ High Voltage Rectifier Modules

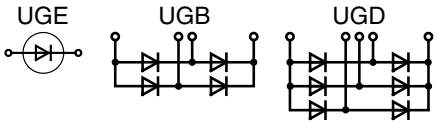

Type	V_{RRM} V	I_{dAV} ① / ② A	I_{FSM} 10 ms, 45°C A	V_{F0} V	r_F mΩ	T_{VJM} °C	R_{thJA1} ① K/W	R_{thJA2} ② K/W	Fig. No.	Package style Outline drawings on pages O-30...O-55
UGE 0421AY4	3200	23 / 7.4	300	1.70	16	150	1.9	7.1	X251	
UGE 0221AY4	4800	10 / 3.8	180	2.55	90	150	1.7	8.0		
UGE 1112AY4	8000	4.2 / 2.0	120	4.25	215	150	4.2	10.0		
UGE 3126AY4	24000	2.0 / 0.8	70	12.00	1800	150	2.7	8.7		
UGB 3132AD	4800	1.3	60	-	-	150	-	-	X252	
UGB 6124AG	10500	1.0	50	-	-	150	-	-	X253b	
UGD 6123AG	7200	1.8	50	-	-	150	-	-	X253a	
UGD 8124AG	10500	1.2	50	-	-	150	-	-		

Data according to IEC 60747-2/6

① for oil-cooling with cooling plate, T_A = 35°C
② for natural air cooling without cooling plate, T_A = 45°C

X253b **UGB**

X253a **UGD**

X252 **UGB**

X251 **UGE**

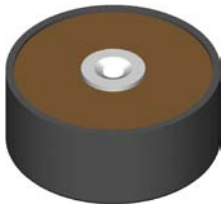

Braking Rectifier Assemblies

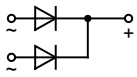

VGF 0136 AH

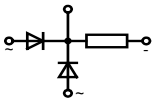

VGF 0136 AB

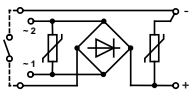

VGB 0124 AY7

Type	V_{vRMS} typ. V	V_{dAV} typ. V	I_{dAVM} typ. A	I_{dAVM} max. A	V_{RRM} max. V	I_{FSM} max. A	I^2t max. A^2s	Fig. No.	Package style Outline drawings on pages O-30...O-55
VGB 0124AY7a	380	340	1.0	1.0	1400	60	28	X254	
VGF 0136AB	1000	440	1.2	1.5	2800	80	40	X255	
VGF 0136AH	1000	440	0.6	1.1	1400	60	28	X256	

X256 **VG-C**

X254 **VG-A**

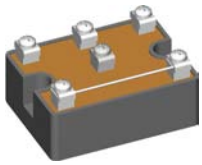

X255 **VG-B**

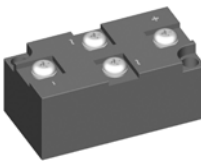

Data according to IEC 60747 and refer to a single diode or thyristor unless otherwise stated.

Break-Over Diodes

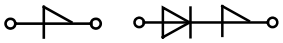

Version R Version RD

Type	V_{BO}	I_{BO}	I_H	V_H	I_D	I_{AVM} ①	I_{SM}	dv/dt	R_{thJA}	Fig. No.	Package style
	T_{VJ} = 25 °C, $K_T = 2 \cdot 10^{-3}$ K^{-1}		T_{VJ} = 25 °C		T_{VJ} = 125 °C, $V_D = 0.8 \cdot V_{BO}$	T_{amb} = 50 °C					Outline drawings on pages O-30...O-55
	V	mA	mA	V	µA	A	A	V/µs	K/W		
IXBOD 1-06	600 ±50	< 15	30	4-8	20	0.90	200	>1000	60	X201	
IXBOD 1-07	700										
IXBOD 1-08	800										
IXBOD 1-09	900										
IXBOD 1-10	1000										X201 **FP-Case** (oil proof)
IXBOD 1-12R	1200 ±50	< 15	30	4-8	100	0.90	200	>1500	20	X202	
IXBOD 1-12RD											
IXBOD 1-13R	1300										
IXBOD 1-13RD											
IXBOD 1-14R	1400										
IXBOD 1-14RD											
IXBOD 1-15R	1500										
IXBOD 1-15RD											
IXBOD 1-16R	1600										
IXBOD 1-16RD											
IXBOD 1-17R	1700										
IXBOD 1-17RD											X202 **BOD-Package**
IXBOD 1-18R	1800										
IXBOD 1-18RD											
IXBOD 1-19R	1900										
IXBOD 1-19RD											
IXBOD 1-20R	2000										
IXBOD 1-20RD											
IXBOD 1-21R	2100 ±50	< 15	30	4-8	100	0.90	200	>2500	20		
IXBOD 1-21RD											
IXBOD 1-22R	2200										
IXBOD 1-22RD											
IXBOD 1-23R	2300										
IXBOD 1-23RD											
IXBOD 1-24R	2400										
IXBOD 1-24RD											
IXBOD 1-25R	2500										
IXBOD 1-25RD											
IXBOD 1-26R	2600 ±100										
IXBOD 1-26RD											
IXBOD 1-28R	2800										
IXBOD 1-28RD											
IXBOD 1-30R	3000										
IXBOD 1-30RD											
IXBOD 1-32R	3200										
IXBOD 1-32RD											
IXBOD 1-34R	3400 ±100	< 15	30	4-8	100	0.90	200	>3500	20		
IXBOD 1-36R	3600										
IXBOD 1-38R	3800										
IXBOD 1-40R	4000										
IXBOD 1-42R	4200										

① Leads soldered on PCB board, T_{stg} and T_{VJ} = -40 ... +125°C

Break-Over-Diodes Sets

We deliver also:
- Special selection of more than 2 pcs IXBOD1-... for every break down voltage of VBO > 2000 V
- Example
  type designation IXBOD Set SA05/00
  VBO = 4700 V ±100 V
  (we deliver 5 pcs single selected IXBOD1-... in one plastic bag)
  Customers use these products on PCB connected in series with parallel resistor R = 10 MΩ
  across each IXBOD

Data according to IEC 60747 and refer to a single diode or thyristor unless otherwise stated.

IXBOD 2 - Fast Break-Over Diodes

Advantages compared with IXBOD 1**:**

- Temperature coefficient K_T reduced by a factor of 3
  - tighter definition of the break-over voltage V_{BO}
    -- $V_{BO}(T_{VJ}) = V_{BO}, 25°C [1 + K_T (T_{VJ} - 25°C)]$
  - more precise and controllable design due to smaller tolerances
- Significant reduction of the switching-on time down to a few nanoseconds

Applications:

- Protection circuits for thyristors in high valuable designs
  - high DC current power transmissions for long distances like offshore windmills or hydroelectric dams
- High Intensity Discharge Lighting (HID)

Fast Break-Over Diodes

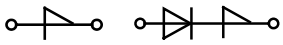

Version R Version RD

Type	V_{BO}	I_{BO}	I_H	V_H	I_D	I_{AVM} ①	I_{SM}	dv/dt	R_{thJA}	Fig. No.	Package style
	T_{VJ} = 25 °C, $K_T = 0.7 \cdot 10^{-3}$ K^{-1}		T_{VJ} = 25 °C		T_{VJ} = 125 °C, $V_D = 0.8 \cdot V_{BO}$	T_{amb} = 50 °C					Outline drawings on pages O-30...O-55
➢ New	V	mA	mA	V	µA	A	A	V/µs	K/W		
IXBOD 2-01	100	15	20	4-8	200	0.90	250	>1000	60	X201	
IXBOD 2-02	200 ±10%										
IXBOD 2-03	300 $\cdot V_{BO}$										
IXBOD 2-04	400										
IXBOD 2-05	500 ±50										
IXBOD 2-06	600										X201 **FP-Case** (oil proof)
IXBOD 2-07	700										
IXBOD 2-08	800										
IXBOD 2-09	900										
IXBOD 2-10	1000										
IXBOD 2-11	1100										
IXBOD 2-12	1200										
IXBOD 2-13	1300										
IXBOD 2-14	1400										
IXBOD 2-15R	1500 ±50	15	20	4-8	200	0.90	250	>1500	20	X202	
IXBOD 2-15RD											
IXBOD 2-16R	1600										
IXBOD 2-16RD											X202 **BOD-Package**
IXBOD 2-17R	1700										
IXBOD 2-17RD											
IXBOD 2-18R	1800										
IXBOD 2-18RD											
IXBOD 2-19R	1900										
IXBOD 2-19RD											
IXBOD 2-20R	2000										
IXBOD 2-20RD											
IXBOD 2-21R	2100										
IXBOD 2-21RD											
IXBOD 2-22R	2200										
IXBOD 2-22RD											
IXBOD 2-23R	2300										
IXBOD 2-23RD											
IXBOD 2-24R	2400										
IXBOD 2-24RD											
IXBOD 2-25R	2500										
IXBOD 2-25RD											
IXBOD 2-26R	2600										
IXBOD 2-26RD											
IXBOD 2-27R	2700										
IXBOD 2-27RD											
IXBOD 2-28R	2800										
IXBOD 2-28RD											

Data according to IEC 60747 and refer to a single diode or thyristor unless otherwise stated.

Fast Break-Over Diodes

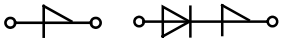

Version R Version RD

Type	V_{BO}		I_{BO}	I_H	V_H	I_D	I_{AVM} ①	I_{SM}	dv/dt	R_{thJA}	Fig. No.	Package style
	T_{VJ} = 25 °C K_T = 0.7·10^{-3} K^{-1}			T_{VJ} = 25 °C		T_{VJ} = 125 °C V_D = 0.8 · V_{BO}	T_{amb} = 50 °C					Outline drawings on pages O-30...O-55
➢ New	V		mA	mA	V	µA	A	A	V/µs	K/W		
IXBOD 2-29R	2900	±50	15	20	4-8	200	0.90	250	>2500	20	X202	X202 **BOD-Package** 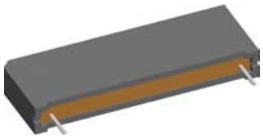
IXBOD 2-29RD												
IXBOD 2-30R	3000											
IXBOD 2-30RD												
IXBOD 2-31R	3100											
IXBOD 2-31RD												
IXBOD 2-32R	3200											
IXBOD 2-32RD												
IXBOD 2-33R	3300											
IXBOD 2-33RD												
IXBOD 2-34R	3400											
IXBOD 2-34RD												
IXBOD 2-35R	3500											
IXBOD 2-35RD												
IXBOD 2-36R	3600											
IXBOD 2-36RD												
IXBOD 2-37R	3700											
IXBOD 2-37RD												
IXBOD 2-38R	3800											
IXBOD 2-38RD												
IXBOD 2-39R	3900											
IXBOD 2-39RD												
IXBOD 2-40R	4000											
IXBOD 2-40RD												
IXBOD 2-41R	4100											
IXBOD 2-41RD												
IXBOD 2-42R	4200											
IXBOD 2-42RD												
IXBOD 2-43R	4300	±50	15	20	4-8	200	0.90	250	>3500	20		
IXBOD 2-44R	4400											
IXBOD 2-45R	4500											
IXBOD 2-46R	4600											
IXBOD 2-47R	4700											
IXBOD 2-48R	4800											
IXBOD 2-49R	4900											
IXBOD 2-50R	5000											
IXBOD 2-51R	5100											
IXBOD 2-52R	5200											
IXBOD 2-53R	5300											
IXBOD 2-54R	5400											
IXBOD 2-55R	5500											
IXBOD 2-56R	5600											

① Leads soldered on PCB board, T_{stg} and T_{VJ} = -40 ... +125°C

Data according to IEC 60747 and refer to a single diode or thyristor unless otherwise stated.

For a complete listing of IXYS Integrated Circuits Division's Solid-State Relay products, please visit: *www.ixysic.com*

BI

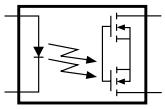

1-Form-A Relays: Single-Pole, Bidirectional

Part Number	Relay Type	Blocking Voltage	Load Current			On Resistance	Input Control Current	Switching Speeds	Isolation Voltage	Off-State Leakage	Package Type
			Free Air	5°C/W Heat Sink	T_C = 25°C			t_{on} / t_{off}			
		(V_P)	(A_{rms})	(A_{rms})	(A_{rms})	(Ω)	(mA)	(ms)	(V_{rms})	(μA)	
CPC1906Y	BI	60	2	-	-	0.3	10	10 / 5	2500	1	36
CPC1907B	BI	60	6	-	-	0.06	5	5 / 1	5000	1	66
CPC1908J	BI	60	3.5	8.5	15	0.3	10	20 / 5	2500	1	29
CPC1909J	BI	60	6.5	15	15	0.1	10	25 / 10	2500	1	37
CPC1916Y	BI	100	2.5	-	-	0.34	10	5 / 3	2500	1	36
CPC1918J	BI	100	5.25	13	15	0.1	10	25 / 10	2500	1	37
CPC1926Y	BI	250	0.7	-	-	1.4	10	10 / 10	2500	1	36
CPC1927J	BI	250	2.7	6.7	15	0.2	10	25 / 10	2500	1	37
CPC1967J	BI	400	1.35	3.35	13.15	0.85	10	20 / 5	2500	1	29
CPC1968J	BI	500	2	5	15	0.35	10	20 / 5	2500	1	37
CPC1973Y	BI	400	0.35	-	-	5	10	5 / 3	2500	1	36
CPC1977J	BI	600	1.25	3.1	12.25	1	10	20 / 5	2500	1	29
CPC1978J	BI	800	0.75	1.85	7.25	2.3	10	20 / 5	2500	1	29
CPC1979J	BI	600	1.4	3.5	14.5	0.75	10	25 / 5	2500	1	37
CPC1981Y	BI	1000	0.18	-	-	18	10	10 / 5	2500	1	36
CPC1983Y	BI	600	0.5	-	-	6	5	5 / 2	2500	1	36
CPC1983YE	BI	600	0.5	-	-	6	5	5 / 2	4000	1	36
CPC1986J	BI	1000	0.65	1.6	6.5	3	10	20 / 5	2500	1	29
CPC1988J	BI	1000	0.9	2.25	9.4	2.5	10	20 / 5	2500	1	37

UNI

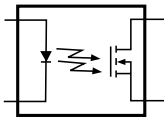

1-Form-A Relays: Single-Pole, Unidirectional

CPC1706Y	UNI	60	4	-	-	0.09	5	5 / 2	2500	1	36
CPC1708J	UNI	60	4	11.85	24	0.08	10	20 / 5	2500	1	29
CPC1709J	UNI	60	9	22.8	32	0.05	10	20 / 5	2500	1	37
CPC1718J	UNI	100	6.75	17.5	32	0.075	10	20 / 5	2500	1	37
CPC1726Y	UNI	250	1	-	-	0.75	10	5 / 2	2500	1	36
CPC1727J	UNI	250	3.4	8.6	20	0.09	10	20 / 5	2500	1	37
CPC1777J	UNI	600	1.5	4.6	15	0.5	10	20 / 5	2500	1	29
CPC1779J	UNI	600	1.65	4.12	15	0.4	10	20 / 5	2500	1	37
CPC1786J	UNI	1000	0.65	1.75	6.9	2	10	20 / 5	2500	1	29
CPC1788J	UNI	1000	1	2.45	10.3	1.25	10	20 / 5	2500	1	37

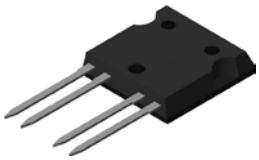

29 i4-PAC

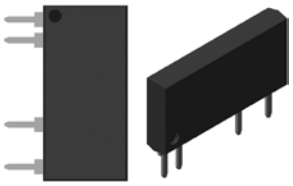

36 Power SIP

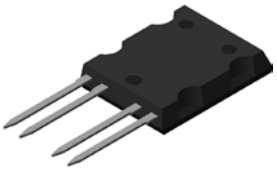

37 ISOPLUS-264

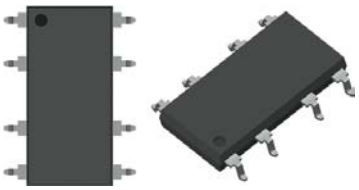

66 Power SOIC

Optically Isolated AC Power Switches

These AC Power Switches offer dual power-SCR outputs, and have tightly controlled zero-cross circuitry to ensure switching of AC loads with minimal transient generation. These switches are ideal for controlling a variety of AC circuits in industrial environments where electromagnetic interference would disrupt the operation of electromechanical relays.

AC Relays I_{LOAD} >1A

Part Number	Blocking Voltage	Load Current			Input Control Current	Input Control Voltage	Operating Frequency	Isolation Voltage	Fig. No.
		No Heat Sink	with 5°C/W Heat Sink	T_C = 25°C			Min / Max		
➢ New	(V_P)	(A_{rms})	(A_{rms})	(A_{rms})	(mA)	(V)	(Hz)	(V_{rms})	
CPC1964B	800	1.5	-	-	5	-	20 - 500	5000	66
CPC1966	600	3	-	-	5	-	20 - 500	3750	36
➢ **CPC1966B**	800	3	-	-	5	-	20 - 500	5000	66
CPC1976	600	2	-	-	5	-	20 - 500	3750	36
CPC1998	800	5	20	50	5	-	20 - 500	2500	29
➢ **CPC40055**	800	5	20	50	5	-	20 - 500	2500	64
➢ **CPC44055**	800	5	20	50	-	9 - 16	20 - 500	2500	64

2 4-Pin DIP (16-Pin Body)

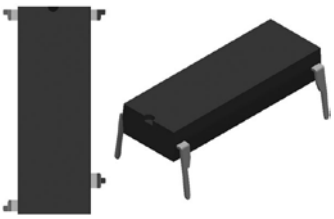

12 6-Pin Surface Mount

14 6-Pin DIP

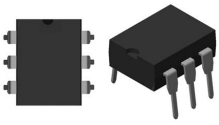

15 6-Pin Power DIP

16 6-Pin DIP Surface Mount

20 8-Pin DIP

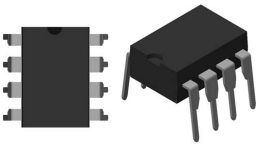

22 8-Pin Surface Mount

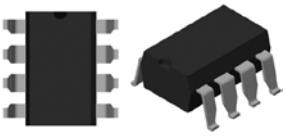

23 4-Pin SIP (8-Pin Body)

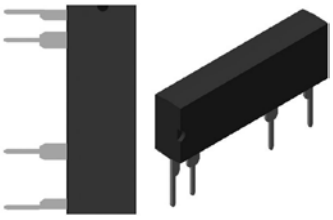

29 i4-PAC

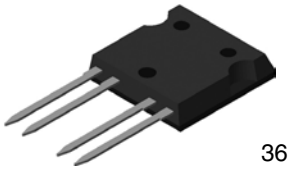

64 NEW Large SIP Full Pack

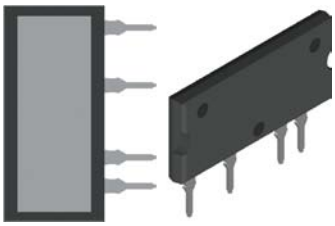

66 NEW Power SOIC

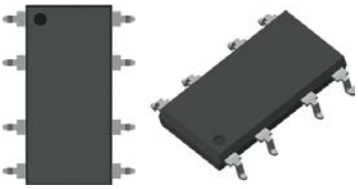

36 Power SIP

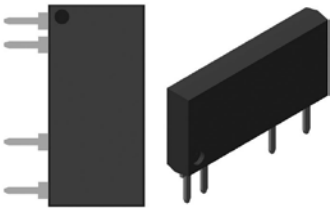

Part Number	Blocking Voltage	Load Current	Input Control Current	Operating Frequency	Isolation Voltage	Fig. No.
				Min / Max		
	(V_P)	(A_{rms})	(mA)	(Hz)	(V_{rms})	
CPC1943	400	0.5	5	20 - 500	3750	15, 16
CPC1945G	400	1	5	20 - 400	3750	2
CPC1945Y	400	1	5	20 - 400	3750	23
CPC1961	600	0.25	5	20 - 500	3750	20, 22
CPC1963	600	0.5	5	20 - 500	3750	15, 16
CPC1965G	600	1	5	20 - 400	3750	2
CPC1965Y	600	1	5	20 - 400	3750	23
CPC1972	800	0.25	5	20 - 500	3750	12, 14
PD1201	400	1	5	20 - 500	3750	2
PD2401	500	1	5	20 - 500	3750	2
PD2601	600	1	5	20 - 500	3750	2
PM1204	400	0.5	5	20 - 500	3750	15, 16
PM1205	500	0.5	5	20 - 500	3750	15, 16
PM1206	600	0.5	5	20 - 500	3750	15, 16
PS1201	400	1	5	20 - 500	3750	23
PS2401	500	1	5	20 - 500	3750	23
PS2601	600	1	5	20 - 500	3750	23

For a complete listing of IXYS Integrated Circuits Division's Solid-State Relay products, please visit: *www.ixysic.com*

Gate Drivers

These ultra-fast, high current MOSFET and IGBT gate drivers are optimized for high efficiency performance in motor drive and power conversion applications. With output current ratings of 2A to 30A, they are designed to switch the largest MOSFETs and IGBTs with minimum switching times and at frequencies up to 10MHz. Depending on the output current rating, these gate drivers are offered in DFN, SOIC, Power SOIC, DIP, TO-220, and TO-263 packages.

Part Number	Output Type	I_{PEAK} T_C = 25°C (A_P)	Output Resistance (Ω)	Logic Config.	Enable Function	Under-voltage Lockout (V)	Fig. No.	Package Type
IX4423	DUAL	3	4	D			54	20 8-pin DIP
IX4424	DUAL	3	4	E			54	
IX4425	DUAL	3	4	F			54	
IX4426	DUAL	1.5	9	D			54, 56	
IX4427	DUAL	1.5	9	E			54, 56	
IX4428	DUAL	1.5	9	F			54, 56	
IXD_602	DUAL	2	4	D, E, F			20, 53, 54, 56	
IXD_604	DUAL	4	2.5	D, E, F, G	• (G)		20, 53, 54, 56	
IXD_609	SINGLE	9	1	A, B, C	• (A)		20, 53, 54, 56, 57, 58	
IXD_614	SINGLE	14	0.8	A, B, C	• (A)		20, 53, 57, 58	53 8-pin Power SOIC
IXD_630	SINGLE	30	0.4	A, B, C	• (A)	$V_{CC} \leq 12.5$	57, 58	
IXD_630M	SINGLE	30	0.4	A, B, C	• (A)	$V_{CC} \leq 9$	57, 58	

IXD_604SI/SIA and IXD_609SI AEC Q100 Qualified!

54 8-pin SOIC

56 8-pin DFN

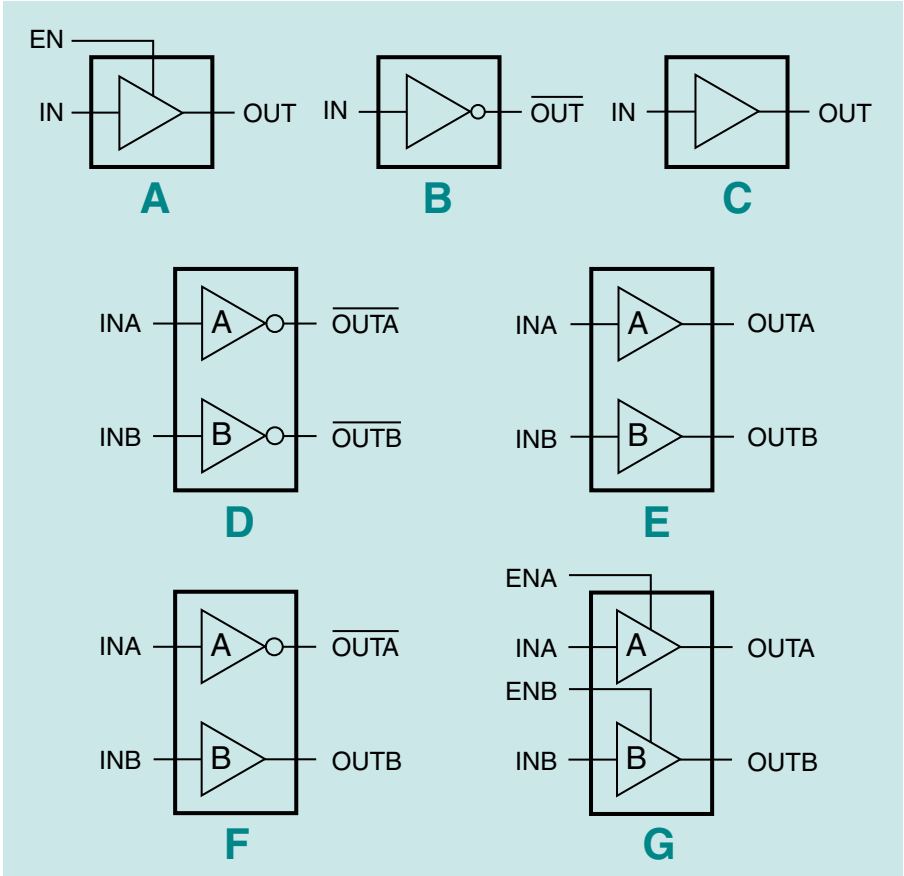

57 5-pin TO-220

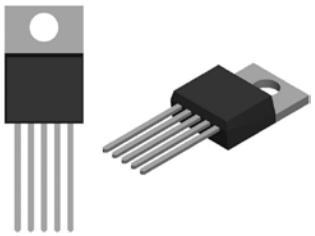

58 5-pin TO-263

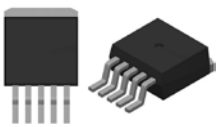

IX2127 600V High-Side MOSFET and IGBT Gate Driver

The IX2127 is a high voltage, high-speed power MOSFET and IGBT driver. The device's high voltage level-shift technique enables it to operate at up to 600V. Proprietary common-mode design techniques provide stable operation in high dV/dt noise environments.

The IX2127 detects an over-current condition in the driven MOSFET or IGBT device, and shuts down drive to that device. An open-drain output, FAULT, indicates that an over-current shutdown has occurred. The gate driver output typically can source 250mA and sink 500mA, which is suitable for fluorescent lamp ballast, motor control, SMPS, and other converter drive topologies. Available in 8-pin DIP and 8-pin SOIC packages.

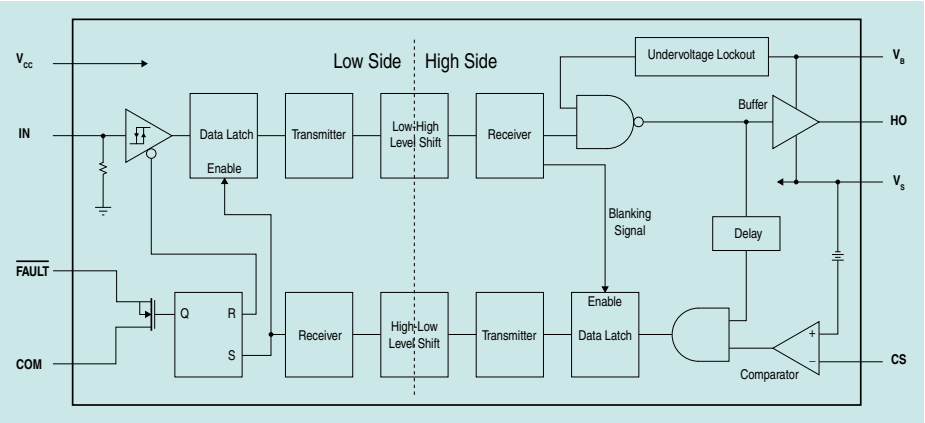

Features:

- Floating Channel Designed for Bootstrap Operation up to 600V
- Tolerant to Negative Transient Voltages; dV/dt Immune
- Undervoltage Lockout
- 3.3V, 5V, and 12V Input Logic Compatible
- Open-Drain FAULT Indicator Pin Shows Over-Current Shutdown
- Output in Phase with the Input

Applications:

- High Speed Gate Driver
- Motor Drive Inverter

8-pin DIP

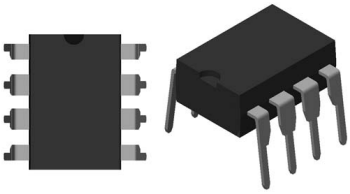

8-pin SOIC

IX3120 2.5A-Output Optically Coupled Gate Driver **NEW!**

The IX3120 gate driver includes an input infrared LED that is optically coupled to a power output stage. The power output stage is capable of sourcing or sinking 2.5A of peak current, which is ideal for driving IGBTs and MOSFETs in the mid-power range. The gate driver optocoupler with its low input LED current, high output peak current, and high noise immunity (25kV/µs) is ideally suited for use in motor control and inverter applications. The IX3120 is provided in an 8-pin DIP package and an 8-pin surface mount package.

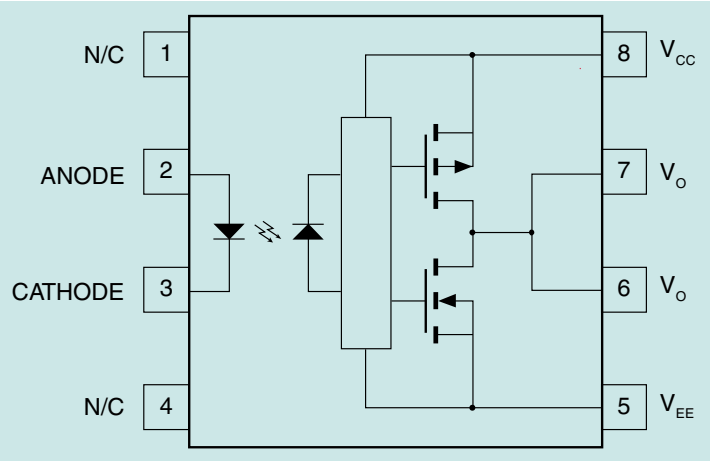

Applications:

- Isolated IGBT/MOSFET Gate Drive
- Switch Mode Power Supplies
- Industrial Inverters
- Motor Drivers

Features:

- 2.5A Maximum Peak Output Current
- 25kV/µs Minimum Common Mode Rejection (CMR) at $1500V_{CM}$
- Wide Operating Voltage Range: 15V to 30V
- Under Voltage Lockout with Hysteresis
- $3750V_{rms}$ Input to Output Isolation
- Wide Temperature Range: -40°C to +100°C

Optically Isolated Gate Drivers

The CPC1580 and CPC1590 are high speed, optically isolated Gate Driver ICs. On-chip circuitry charges an external capacitor from the load voltage which eliminates the need for an external IC power supply. These Gate Drivers are ideal for low duty cycle switching applications. Both devices are provided in an 8-pin flatpack package.

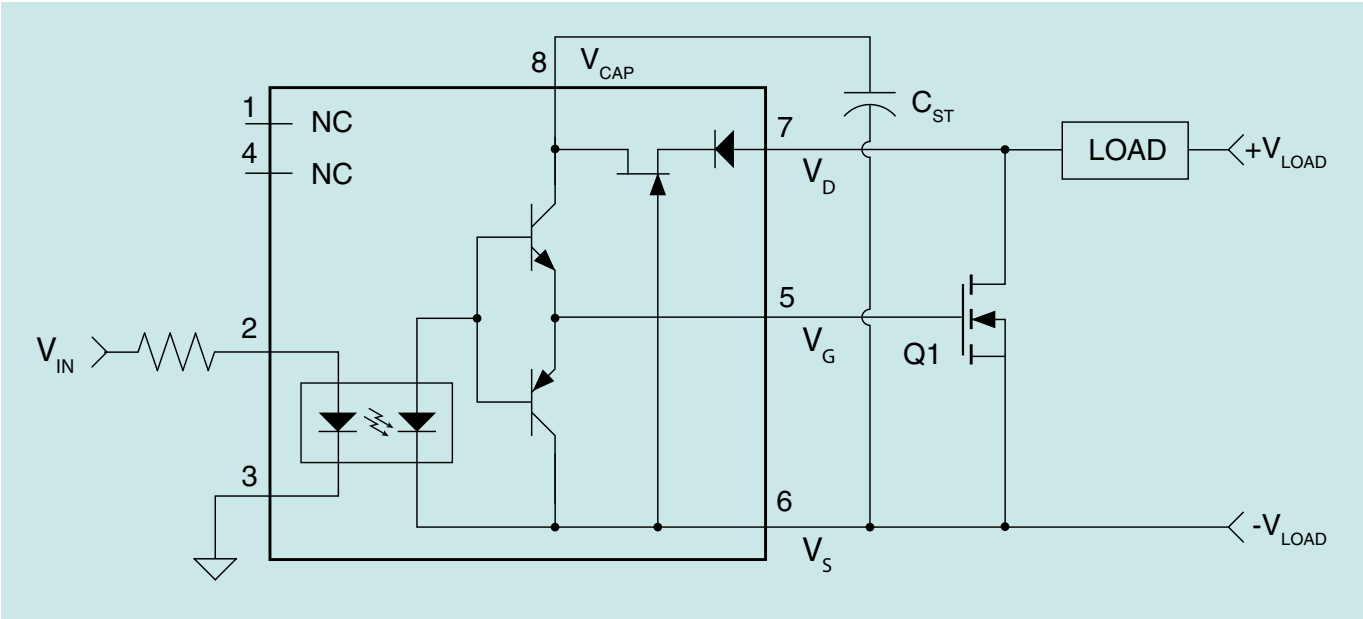

Features:

- No External IC Power Supply
- Low Drive Power Requirements (TTL/CMOS Compatible)
- Load Voltages up to 200V
- Fast Switching Times - On: 40µsec / Off: 400µsec

8-Pin Flatpack

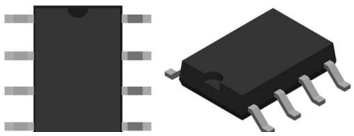

Applications:

- Instrumentation
- Multiplexers
- I/O Subsystems
- Meters (Watt-Hour, Water, Gas)
- Medical Equipment (Patient/Equipment Isolation)
- Industrial Controls
- Aerospace
- Security

Part Number	Input Control Current (mA)	Gate Voltage @ I_F = 5mA (V_P)	Blocking Voltage (V_P)	Regulated Capacitor Voltage ($V_{CAP-MAX}$)	Switching Speeds t_{on} / t_{off} (µs)	Isolation Voltage (V_{rms})
CPC1580	2.5	7.5 - 12	65	V_{DS} - 0.2V	40 / 400	3750
CPC1590	2.5	7.5 - 12	200	16	40 / 400	3750

LED Drivers

CPC9909 High Efficiency, High Brightness Off-Line LED Driver

The CPC9909 is a low-cost, high-efficiency, off-line, high-brightness (HB) LED driver manufactured using our high voltage BCDMOS on SOI process. It has an internal regulator that allows it to operate from 8VDC to 550VDC. This wide input operating voltage range enables the driver to be used in a broad range of HB LED applications.

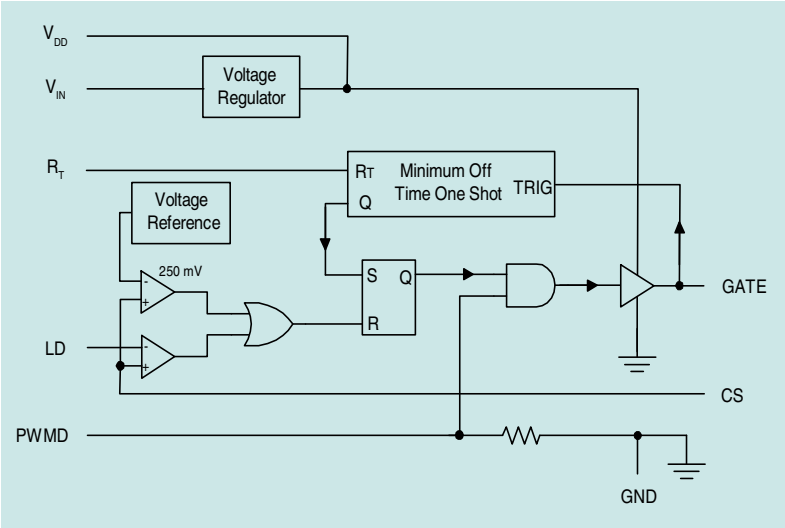

Features:
- 8V to 550V Input Voltage Range
- >90% Efficiency
- Stable Operation at >50% Duty Cycle
- Drives Multiple LEDs in Series/Parallel
- Regulated LED Current
- Linear or PWM Brightness Control Inputs
- Resistor-Programmable Minimum Off-Time
- Buck or Boost Configuration
- Available in 8-Pin SOIC and Power SOIC Packages

8-Pin SOIC

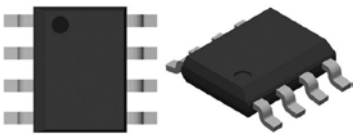

8-Pin Power SOIC

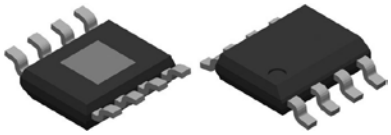

MXHV9910 High Voltage, Off-Line LED Driver

The MXHV9910 features a fixed-frequency, peak-current control method, which provides an ideal solution for driving multiple LEDs in series and in parallel. Internal circuitry allows it to operate from a universal AC line, or from 8VDC to 450VDC. This highly versatile input operating voltage enables this IC to be used in a broad range of HB LED applications. In addition, LED dimming can be implemented by applying a small DC voltage to the LD pin, or by applying a low-frequency digital PWM signal to the PWMD pin. Applications include flat-panel display RGB backlighting, signage, decorative LED lighting, and DC & AC/DC LED driver applications.

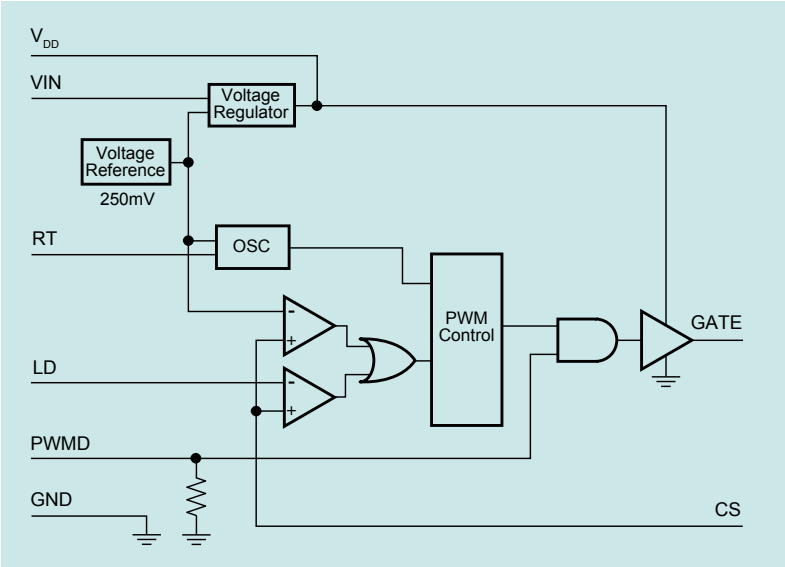

Features:
- 8V to 450V Input Voltage Range
- >90% Efficiency
- Drives Multiple LEDs in Series/Parallel Combinations
- Regulated LED Drive Current
- Linear or PWM Brightness Control Inputs
- Resistor-Programmable Oscillator Frequency
- Available in 8-Pin SOIC and Power SOIC Packages

8-Pin SOIC

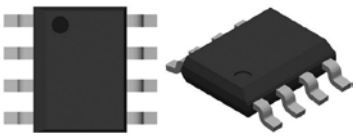

8-Pin Power SOIC

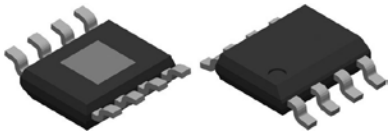

Product Application Notes and Technical Information

Available from www.ixysuk.com

- Application dependent gate trigger requirements of GTO thyristors
- The implementation of gate turn-off thyristors as high voltage turn-on switches for pulse power applications
- Improved semiconductor switches for pulse power applications
- Integrated 30 kV Solid-State Switch for Pulse Power Applications
- Press-Pack IGBTs, Semiconductor Switches for Pulse Power
- The application of pressure contact IGBTs in pulse power
- Design concepts of a bondless pressure-contact IGBT
- Electromechanical characteristics of a bondless pressure contact IGBT
- Pressure Contacted IGBTs
- Pressure contact IGBT, the ideal switch for high power applications
- Pressure contact IGBT, testing for reliability
- New high current press-pack IGBTs
- Magazine Feature: Positive Development in high reliability completely bond free pressure contact IGBTs
- Application of Press-pack IGBTs in Traction Refurbishment
- New 5.2 kV Extra Fast Recovery Diodes for IGBT and IGCT Applications
- New family of 4.5 kV Press-Pack IGBTs
- New Extra Fast Soft Recovery Diodes and their Applications
- Managing power semiconductor obsolescence by press-pack IGBT substitution
- Westcode Product Nomenclatures (Capsules, Studs, and Pulse Thyristors)
- Terms & Symbols
- Mounting Instructions
- Press Releases

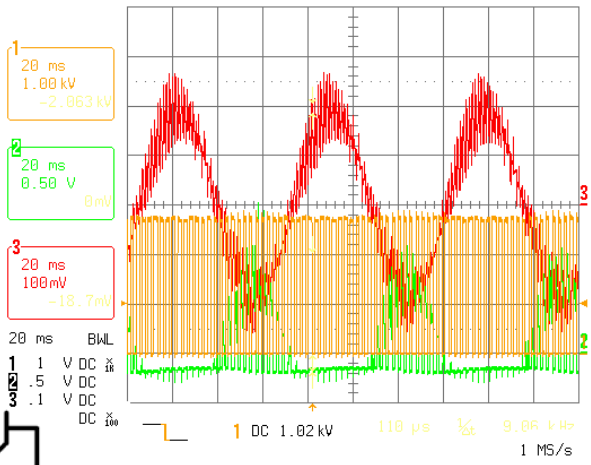

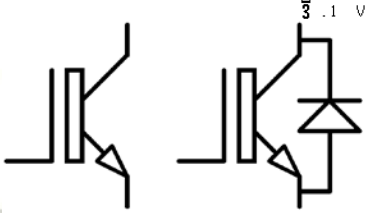

Rectifier Diodes

Our comprehensive range of rectifier diodes offers class leading performance and reliability. Devices are available with blocking voltages from 200V up to 6kV. Optimised to offer low conduction losses, these devices are ideally suited to line frequency applications up to 400Hz including input rectifiers for variable speed drives, traction converters, trackside substations, welding and DC power supplies. Featuring compression bonded, alloyed Silicon wafer construction, these devices feature low thermal impedance and high overload capacity and are designed to survive even the most arduous applications.

The latest additions to the IXYS UK Rectifier Diode family are four new 83mm dia Si Rectifier Diodes. These new designs use a bonded die construction and improved package design for maximum power to package ratio, as well as better thermal and electromechanical performance. Four new products have been launched offering average current ratings up to 9830A and voltage ratings up to 4800V with further products planned.

Stud Types

Type Part No.	V_{RRM}	I_{FAV}	I_{FSM}	I^2t	V_{T0}	r_T	T_{JM}	R_{thJC}		Fig. No.
		T_C = 55°C	10 ms ½ sine $V_R \leq 60\%\ V_{RRM}$		@T_{JM}			d.c. 180° sine	120° Rect.	
	V	A	A	A^2s	V	mΩ	°C	K/W	K/W	
W0428RE250	2500	428	5500	151 x 10^3	0.926	0.739	150	0.1300	0.1530	W39
W0428RE280	2800	428	5500	151 x 10^3	0.926	0.739	150	0.1300	0.1530	W39
W0428RE320	3200	428	5500	151 x 10^3	0.926	0.739	150	0.1300	0.1530	W39
W0428RF250	2500	428	5500	151 x 10^3	0.926	0.739	150	0.1300	0.1530	W24
W0428RF280	2800	428	5500	151 x 10^3	0.926	0.739	150	0.1300	0.1530	W24
W0428RF320	3200	428	5500	151 x 10^3	0.926	0.739	150	0.1300	0.1530	W24
W0428SE250	2500	428	5500	151 x 10^3	0.926	0.739	150	0.1300	0.1530	W39
W0428SE280	2800	428	5500	151 x 10^3	0.926	0.739	150	0.1300	0.1530	W39
W0428SE320	3200	428	5500	151 x 10^3	0.926	0.739	150	0.1300	0.1530	W39
W0428SF250	2500	428	5500	151 x 10^3	0.926	0.739	150	0.1300	0.1530	W24
W0428SF280	2800	428	5500	151 x 10^3	0.926	0.739	150	0.1300	0.1530	W24
W0428SF320	3200	428	5500	151 x 10^3	0.926	0.739	150	0.1300	0.1530	W24
W0503RC160	1600	503	5500	151 x 10^3	0.990	0.740	180	0.1300	0.1530	W24
W0503RC200	2000	503	5500	151 x 10^3	0.990	0.740	180	0.1300	0.1530	W24
W0503RC240	2400	503	5500	151 x 10^3	0.990	0.740	180	0.1300	0.1530	W24
W0503SC160	1600	503	5500	151 x 10^3	0.990	0.740	180	0.1300	0.1530	W24
W0503SC200	2000	503	5500	151 x 10^3	0.990	0.740	180	0.1300	0.1530	W24
W0503SC240	2400	503	5500	151 x 10^3	0.990	0.740	180	0.1300	0.1530	W24
W0735RA120	1200	735	9000	405 x 10^3	0.790	0.342	190	0.1300	0.1530	W23
W0735RA150	1500	735	9000	405 x 10^3	0.790	0.342	190	0.1300	0.1530	W23
W0735SA120	1200	735	9000	405 x 10^3	0.790	0.342	190	0.1300	0.1530	W23
W0735SA150	1500	735	9000	405 x 10^3	0.790	0.342	190	0.1300	0.1530	W23

Package style

Outlines on pages O-01...O-29

S R

W23 Weight 250 g

W24 Weight 250 g

W39 Weight 250 g

Rectifier Diodes

Capsule Types

Type Part No. ○ Not for new design ➢ New	V_{RRM} V	I_{FAV} T_K = 55°C A	I_{FSM} 10 ms ½ sine $V_R \leq 60\%\ V_{RRM}$ A	I^2t A^2s	V_{T0} @T_{JM} V	r_T mΩ	T_{JM} °C	R_{thJK} 180° Sine K/W	R_{thJK} 120° Rect. K/W	Fig. No.	Package style Outlines on pages O-01...O-29
W0507YH360	3600	507	7600	289 x 10³	0.970	0.880	160	0.1000	0.1170	W3	
W0507YH450	4500	507	7600	289 x 10³	0.970	0.880	160	0.1000	0.1170	W3	
W0642WC160	1600	642	5500	151 x 10³	0.990	0.740	180	0.0900	0.0980	W1	
W0642WC200	2000	642	5500	151 x 10³	0.990	0.740	180	0.0900	0.0980	W1	
W0642WC240	2400	642	5500	151 x 10³	0.990	0.740	180	0.0900	0.0980	W1	
W0944WC120	1200	944	9000	405 x 10³	0.790	0.342	190	0.0900	0.0980	W1	
W0944WC150	1500	944	9000	405 x 10³	0.790	0.342	190	0.0900	0.0980	W1	
W1032LC500	5000	1032	7200	259 x 10³	1.000	0.702	150	0.0330	0.0400	W4	W1 Weight 70 g
W1032LC560	5600	1032	7200	259 x 10³	1.000	0.702	150	0.0330	0.0400	W4	
W1032LC600	6000	1032	7200	259 x 10³	1.000	0.702	150	0.0330	0.0400	W4	
W1074YC200	2000	1074	10800	583 x 10³	0.920	0.390	160	0.0500	0.0610	W2	
W1074YC260	2600	1074	10800	583 x 10³	0.920	0.390	160	0.0500	0.0610	W2	
W1074YC320	3200	1074	10800	583 x 10³	0.920	0.390	160	0.0500	0.0610	W2	
W1074YH200	2000	1074	10800	583 x 10³	0.920	0.390	160	0.0500	0.0610	W3	
W1074YH260	2600	1074	10800	583 x 10³	0.920	0.390	160	0.0500	0.0610	W3	
W1074YH320	3200	1074	10800	583 x 10³	0.920	0.390	160	0.0500	0.0610	W3	
W1185LC300	3000	1185	9200	423 x 10³	1.000	0.575	160	0.0330	0.0400	W4	W2 Weight 80 g
W1185LC380	3800	1185	9200	423 x 10³	1.000	0.575	160	0.0330	0.0400	W4	
W1185LC450	4500	1185	9200	423 x 10³	1.000	0.575	160	0.0330	0.0400	W4	
W1263YC160	1600	1263	11700	684 x 10³	0.870	0.330	175	0.0500	0.0610	W2	
W1263YC200	2000	1263	11700	684 x 10³	0.870	0.330	175	0.0500	0.0610	W2	
W1263YC250	2500	1263	11700	684 x 10³	0.870	0.330	175	0.0500	0.0610	W2	
W1263YH160	1600	1263	11700	684 x 10³	0.870	0.330	175	0.0500	0.0610	W3	
W1263YH200	2000	1263	11700	684 x 10³	0.870	0.330	175	0.0500	0.0610	W3	
W1263YH250	2500	1263	11700	684 x 10³	0.870	0.330	175	0.0500	0.0610	W3	
W1411LC300	3000	1411	10600	562 x 10³	0.900	0.388	160	0.0330	0.0400	W4	W3 Weight 140 g
W1411LC360	3600	1411	10600	562 x 10³	0.900	0.388	160	0.0330	0.0400	W4	
W1520NC500	5000	1478	12000	720 x 10³	0.904	0.552	150	0.0220	0.0255	W5	
W1520NC600	6000	1478	12000	720 x 10³	0.904	0.552	150	0.0220	0.0255	W5	
W1524LC240	2400	1524	12700	810 x 10³	0.870	0.323	160	0.0330	0.0400	W4	
W1524LC300	3000	1524	12700	810 x 10³	0.870	0.323	160	0.0330	0.0400	W4	
W1748LC180	1800	1748	15400	1.19 x 10⁶	0.870	0.280	175	0.0330	0.0400	W4	
W1748LC220	2200	1748	15400	1.19 x 10⁶	0.870	0.280	175	0.0330	0.0400	W4	
W1748LC250	2500	1748	15400	1.19 x 10⁶	0.870	0.280	175	0.0330	0.0400	W4	
○ **W1856NC400**	4000	1856	16000	1.28 x 10⁶	0.975	0.348	160	0.0220	0.0255	W5	
○ **W1856NC500**	5000	1856	16000	1.28 x 10⁶	0.975	0.348	160	0.0220	0.0255	W5	
W2054NC360	3600	2054	19000	1.81 x 10⁶	0.800	0.300	160	0.0220	0.0255	W5	W4 Weight 340 g
W2054NC450	4500	2054	19000	1.81 x 10⁶	0.800	0.300	160	0.0220	0.0255	W5	
W2058LC100	1000	2058	19500	1.90 x 10⁶	0.790	0.192	175	0.0330	0.0400	W4	
W2058LC120	1200	2058	19500	1.90 x 10⁶	0.790	0.192	175	0.0330	0.0400	W4	
W2058LC140	1400	2058	19500	1.90 x 10⁶	0.790	0.192	175	0.0330	0.0400	W4	
W2115MC520	5200	2122	19000	1.81 x 10⁶	1.074	0.405	150	0.0140	0.0160	W54	
W2115MC560	5600	2122	19000	1.81 x 10⁶	1.074	0.405	150	0.0140	0.0160	W54	
W2115MC600	6000	2122	19000	1.81 x 10⁶	1.074	0.405	150	0.0140	0.0160	W54	
W2134NC300	3000	2134	20000	2.00 x 10⁶	0.865	0.260	160	0.0220	0.0255	W5	
W2134NC400	4000	2134	20000	2.00 x 10⁶	0.865	0.260	160	0.0220	0.0255	W5	
○ **W2624NC200**	2000	2624	28000	3.92 x 10⁶	0.780	0.160	160	0.0220	0.0255	W5	W5 Weight 510 g
○ **W2624NC250**	2500	2624	28000	3.92 x 10⁶	0.780	0.160	160	0.0220	0.0255	W5	
W2820VC360	3600	2820	26200	3.43 x 10⁶	1.300	0.147	160	0.0160	0.0180	W6	
W2820VC450	4500	2820	26200	3.43 x 10⁶	1.300	0.147	160	0.0160	0.0180	W6	
W2820VF360	3600	2820	26200	3.43 x 10⁶	1.300	0.147	160	0.0160	0.0180	W43	
W2820VF450	4500	2820	26200	3.43 x 10⁶	1.300	0.147	160	0.0160	0.0180	W43	
W2899MC420	4200	2899	25400	3.23 x 10⁶	0.996	0.222	160	0.0140	0.0160	W54	
W2899MC460	4600	2899	25400	3.23 x 10⁶	0.996	0.222	160	0.0140	0.0160	W54	
W2899MC480	4800	2899	25400	3.23 x 10⁶	0.996	0.222	160	0.0140	0.0160	W54	
W3082MC420	4200	3120	26000	3.38 x 10⁶	0.923	0.192	160	0.0140	0.0160	W54	W6 Weight 1000 g
W3082MC440	4400	3120	26000	3.38 x 10⁶	0.923	0.192	160	0.0140	0.0160	W54	
W3082MC450	4500	3120	26000	3.38 x 10⁶	0.923	0.192	160	0.0140	0.0160	W54	

Rectifier Diodes

Capsule Types

Type Part No. ○ Not for new design ➢ New	V_{RRM} V	I_{FAV} T_K = 55°C A	I_{FSM} 10 ms ½ sine $V_R \leq 60\%\ V_{RRM}$ A	I^2t A²s	V_{T0} @T_{JM} V	r_T mΩ	T_{JM} °C	R_{thJK} 180° Sine K/W	R_{thJK} 120° Rect. K/W	Fig. No.	Package style Outlines on pages O-01...O-29
W3128VC300	3000	3128	30000	4.50×10^6	0.875	0.158	160	0.0160	0.0190	W6	
W3128VC400	4000	3128	30000	4.50×10^6	0.875	0.158	160	0.0160	0.0190	W6	
W3128VF300	3000	3128	30000	4.50×10^6	0.875	0.158	160	0.0160	0.0190	W43	
W3128VF400	4000	3128	30000	4.50×10^6	0.875	0.158	160	0.0160	0.0190	W43	
W3270NC20A †	2000	3270	30400	4.62×10^6	0.826	0.104	175	0.0220	0.0260	W5	
W3270NC22A †	2200	3270	30400	4.62×10^6	0.826	0.104	175	0.0220	0.0260	W5	
W3270NC200 ‡	2000	3270	30400	4.62×10^6	0.826	0.104	175	0.0220	0.0260	W5	
W3270NC220 ‡	2200	3270	30400	4.62×10^6	0.826	0.104	175	0.0220	0.0260	W5	
➢ **W3305QK240**	2400	3305	18500	1.71×10^6	0.910	0.150	175	0.0170	0.0207	WD2	W7 Weight 1700 g
➢ **W3305QK280**	2800	3305	18500	1.71×10^6	0.910	0.150	175	0.0170	0.0207	WD2	
W3455QK200	2000	3455	20000	2.00×10^6	0.940	0.139	180	0.0170	0.0207	WD2	
W3455QK220	2200	3455	20000	2.00×10^6	0.940	0.139	180	0.0170	0.0207	WD2	
W3477MC360	3600	3470	28200	3.98×10^6	0.908	0.146	160	0.0140	0.0160	W54	
W3477MC380	3800	3470	28200	3.98×10^6	0.958	0.146	160	0.0140	0.0160	W54	
W3477MC400	4000	3470	28200	3.98×10^6	0.958	0.146	160	0.0140	0.0160	W54	
W3697VC220	2200	3697	40000	8.00×10^6	0.860	0.100	160	0.0160	0.0190	W6	
W3697VC280	2800	3697	40000	8.00×10^6	0.860	0.100	160	0.0160	0.0190	W6	W28 Weight 1230 g
W3697VF220	2200	3697	40000	8.00×10^6	0.860	0.100	160	0.0160	0.0190	W43	
W3697VF280	2800	3697	40000	8.00×10^6	0.860	0.100	160	0.0160	0.0190	W43	
W3708MC300	3000	3753	30000	4.50×10^6	0.958	0.112	160	0.0140	0.0160	W54	
W3708MC320	3200	3753	30000	4.50×10^6	0.958	0.112	160	0.0140	0.0160	W54	
W3708MC350	3500	3753	30000	4.50×10^6	0.958	0.112	160	0.0140	0.0160	W54	
W3743ZC400	4000	3743	35000	6.13×10^6	0.976	0.170	160	0.0110	0.0132	W7	
W3743ZC450	4500	3743	35000	6.13×10^6	0.976	0.170	160	0.0110	0.0132	W7	
W3743ZC500	5000	3743	35000	6.13×10^6	0.976	0.170	160	0.0110	0.0132	W7	
W3743ZD400	4000	3743	35000	6.13×10^6	0.976	0.170	160	0.0110	0.0132	W42	W29 Weight 1700 g
W3743ZD450	4500	3743	35000	6.13×10^6	0.976	0.170	160	0.0110	0.0132	W42	
W3743ZD500	5000	3743	35000	6.13×10^6	0.976	0.170	160	0.0110	0.0132	W42	
W3841VC300	3000	3841	39800	7.92×10^6	0.860	0.115	175	0.0160	0.0190	W6	
W3841VC340	3400	3841	39800	7.92×10^6	0.860	0.115	175	0.0160	0.0190	W6	
W3841VF300	3000	3841	39800	7.92×10^6	0.860	0.115	175	0.0160	0.0190	W43	
W3841VF340	3400	3841	39800	7.92×10^6	0.860	0.115	175	0.0160	0.0190	W43	
W3842MC240	2400	3842	35100	6.16×10^6	0.831	0.118	160	0.0140	0.0160	W54	W42 Weight 1200 g
W3842MC280	2800	3842	35100	6.16×10^6	0.831	0.118	160	0.0140	0.0160	W54	
W3864QK120	1200	3864	22200	2.46×10^6	0.861	0.109	180	0.0170	0.0210	WD2	
W3864QK150	1500	3864	22200	2.46×10^6	0.861	0.109	180	0.0170	0.0210	WD2	
W3864QK180	1800	3864	22200	2.46×10^6	0.861	0.109	180	0.0170	0.0210	WD2	
W4096ZC340	3400	4096	41700	8.70×10^6	0.730	0.158	160	0.0110	0.0132	W7	
W4096ZC450	4500	4096	41700	8.70×10^6	0.730	0.158	160	0.0110	0.0132	W7	
W4096ZD340	3400	4096	41700	8.70×10^6	0.730	0.158	160	0.0110	0.0132	W42	
W4096ZD450	4500	4096	41700	8.70×10^6	0.730	0.158	160	0.0110	0.0132	W42	W43 Weight 800 g
W4534NC020	200	4543	40000	8.00×10^6	0.765	0.052	190	0.0220	0.0260	W5	
W4534NC060	600	4543	40000	8.00×10^6	0.765	0.052	190	0.0220	0.0260	W5	
W4693QK050	500	4693	31500	4.98×10^6	0.904	0.057	180	0.0170	0.0207	WD2	
W4693QK080	800	4693	31500	4.98×10^6	0.904	0.057	180	0.0170	0.0207	WD2	
W4693QR050	500	4693	31500	4.98×10^6	0.904	0.057	180	0.0170	0.0207	WD7	
W4693QR080	800	4693	31500	4.98×10^6	0.904	0.057	180	0.0170	0.0207	WD7	
W4713HL300	3000	4713	56000	15.70×10^6	0.807	0.090	160	0.0120	0.0132	WD5	
W4713HL350	3500	4713	56000	15.70×10^6	0.807	0.090	160	0.0120	0.0132	WD5	
W4713HM300	3000	4713	56000	15.70×10^6	0.807	0.090	160	0.0120	0.0132	WD6	W52 Weight 2800 g
W4713HM350	3500	4713	56000	15.70×10^6	0.807	0.090	160	0.0120	0.0132	WD6	
W4767MC180	1800	4767	38000	7.22×10^6	0.819	0.083	175	0.0140	0.0160	W54	
W4767MC220	2200	4767	38000	7.22×10^6	0.819	0.083	175	0.0140	0.0160	W54	
W5092ZC320	3200	5092	58000	16.8×10^6	0.874	0.079	160	0.0110	0.0132	W7	
W5092ZC350	3500	5092	58000	16.8×10^6	0.874	0.079	160	0.0110	0.0132	W7	
W5092ZD320	3200	5092	58000	16.8×10^6	0.874	0.079	160	0.0110	0.0132	W42	
W5092ZD350	3500	5092	58000	16.8×10^6	0.874	0.079	160	0.0110	0.0132	W42	W54 Weight 530 g
➢ **W5130MK240**	2400	5130	42000	8.82×10^6	0.910	0.070	175	0.0130	0.0149	WD3	
➢ **W5130MK280**	2800	5130	42000	8.82×10^6	0.910	0.070	175	0.0130	0.0149	WD3	

Rectifier Diodes

Capsule Types

Type Part No. ○ Not for new design ➢ New	V_{RRM} V	I_{FAV} T_K = 55°C A	I_{FSM} 10 ms ½ sine $V_R \leq 60\%\ V_{RRM}$ A	I^2t A^2s	V_{T0} @T_{JM} V	r_T @T_{JM} mΩ	T_{JM} °C	R_{thJK} 180° Sine K/W	R_{thJK} 120° Rect. K/W	Fig. No.	Package style Outlines on pages O-01...O-29
➢ **W5139TJ400**	4000	5139	55000	15.10×10^6	0.826	0.136	160	0.0080	0.0085	W89	
➢ **W5139TJ480**	4800	5139	55000	15.10×10^6	0.826	0.136	160	0.0080	0.0085	W89	
➢ **W5139TE400**	4000	5139	55000	15.10×10^6	0.826	0.136	160	0.0080	0.0085	W94	
➢ **W5139TE480**	4800	5139	55000	15.10×10^6	0.826	0.136	160	0.0080	0.0085	W94	
W5282ZC240	2400	5282	60000	18.00×10^6	0.970	0.064	160	0.0110	0.0132	W7	
W5282ZC300	3000	5282	60000	18.00×10^6	0.970	0.064	160	0.0110	0.0132	W7	
W5282ZD240	2400	5282	60000	18.00×10^6	0.970	0.064	160	0.0110	0.0132	W42	
W5282ZD300	3000	5282	60000	18.00×10^6	0.970	0.064	160	0.0110	0.0132	W42	W59 Weight 2000 g
○ **W5292TC500**	5000	5292	52700	13.90×10^6	1.027	0.111	160	0.0080	0.0085	W28	
○ **W5292TC560**	5600	5292	52700	13.90×10^6	1.027	0.111	160	0.0080	0.0085	W28	
○ **W5292TD500**	5000	5292	52700	13.90×10^6	1.027	0.111	160	0.0080	0.0085	W29	
○ **W5292TD560**	5600	5292	52700	13.90×10^6	1.027	0.111	160	0.0080	0.0085	W29	
W5334MK200	2000	5334	46800	10.95×10^6	0.892	0.069	180	0.0130	0.0149	WD3	
W5334MK220	2200	5334	46800	10.95×10^6	0.892	0.069	180	0.0130	0.0149	WD3	
W5636MC120	1200	5636	46000	10.58×10^6	0.698	0.059	175	0.0140	0.0160	W54	W89 Weight 1.3 kg
W5636MC140	1400	5636	46000	10.58×10^6	0.698	0.059	175	0.0140	0.0160	W54	
W5636MC150	1500	5636	46000	10.58×10^6	0.698	0.059	175	0.0140	0.0160	W54	
W5696VC100	1000	5696	53000	14.00×10^6	0.650	0.059	190	0.0160	0.0190	W6	
W5696VC140	1400	5696	53000	14.00×10^6	0.650	0.059	190	0.0160	0.0190	W6	
W5696VF100	1000	5696	53000	14.00×10^6	0.650	0.059	190	0.0160	0.0190	W43	
W5696VF140	1400	5696	53000	14.00×10^6	0.650	0.059	190	0.0160	0.0190	W43	
W5838ZC180	1800	5838	64000	20.50×10^6	0.800	0.074	175	0.0110	0.0132	W7	W94 Weight 1.6 kg
W5838ZC220	2200	5838	64000	20.50×10^6	0.800	0.074	175	0.0110	0.0132	W7	
W5838ZD180	1800	5838	64000	20.50×10^6	0.800	0.074	175	0.0110	0.0132	W42	
W5838ZD220	2200	5838	64000	20.50×10^6	0.800	0.074	175	0.0110	0.0132	W42	
➢ **W5984TJ360**	3600	5984	62000	19.20×10^6	0.758	0.097	160	0.0080	0.0085	W89	
➢ **W5984TJ400**	4000	5984	62000	19.20×10^6	0.758	0.097	160	0.0080	0.0085	W89	
➢ **W5984TE360**	3600	5984	62000	19.20×10^6	0.758	0.097	160	0.0080	0.0085	W94	WD2 Weight 200 g
➢ **W5984TE400**	4000	5984	62000	19.20×10^6	0.758	0.097	160	0.0080	0.0085	W94	
W6262ZC200	2000	6262	67000	22.40×10^6	0.740	0.065	175	0.0110	0.0132	W7	
W6262ZC240	2400	6262	67000	22.40×10^6	0.740	0.065	175	0.0110	0.0132	W7	
W6262ZD200	2000	6262	67000	22.40×10^6	0.740	0.065	175	0.0110	0.0132	W42	
W6262ZD240	2400	6262	67000	22.40×10^6	0.740	0.065	175	0.0110	0.0132	W42	
W6908FC450	4500	6908	70000	24.50×10^6	0.767	0.092	160	0.0065	0.0069	W52	
W6908FC500	5000	6908	70000	24.50×10^6	0.767	0.092	160	0.0065	0.0069	W52	WD3 Weight 270 g
W6908FD450	4500	6908	70000	24.50×10^6	0.767	0.092	160	0.0065	0.0069	W59	
W6908FD500	5000	6908	70000	24.50×10^6	0.767	0.092	160	0.0065	0.0069	W59	
W7045MC030	300	7045	54000	14.60×10^6	0.793	0.033	190	0.0140	0.0160	W54	
W7045MC060	600	7045	54000	14.60×10^6	0.793	0.033	190	0.0140	0.0160	W54	
W8405ZC100	1000	8405	72000	25.90×10^6	0.670	0.038	190	0.0110	0.0132	W7	
W8405ZC140	1400	8405	72000	25.90×10^6	0.670	0.038	190	0.0110	0.0132	W7	
W8405ZD100	1000	8405	72000	25.90×10^6	0.670	0.038	190	0.0110	0.0132	W42	WD5 Weight 1200 g
W8405ZD140	1400	8405	72000	25.90×10^6	0.670	0.038	190	0.0110	0.0132	W42	
➢ **W8570TJ180**	1800	8570	70200	24.60×10^6	0.690	0.050	175	0.0080	0.0085	W89	
➢ **W8570TJ220**	2200	8570	70200	24.60×10^6	0.690	0.050	175	0.0080	0.0085	W89	
➢ **W8570TE180**	1800	8570	70200	24.60×10^6	0.690	0.050	175	0.0080	0.0085	W94	
➢ **W8570TE220**	2200	8570	70200	24.60×10^6	0.690	0.050	175	0.0080	0.0085	W94	
➢ **W9830TJ120**	1200	9830	72000	25.90×10^6	0.670	0.043	190	0.0080	0.0085	W89	
➢ **W9830TJ150**	1500	9830	72000	25.90×10^6	0.670	0.043	190	0.0080	0.0085	W89	WD6 Weight 1500 g
➢ **W9830TE120**	1200	9830	72000	25.90×10^6	0.670	0.043	190	0.0080	0.0085	W94	
➢ **W9830TE150**	1500	9830	72000	25.90×10^6	0.670	0.043	190	0.0080	0.0085	W94	

† = Avalanche rated diode
‡ = Advanced data

For additional voltages, please contact the Chippenham Factory

WD7 Weight 200 g

Fast Diodes

Fast Recovery Diodes are an essential complement to any switching device and are more often than not the limiting factor in the design and performance of modern power converters. To address the needs of our customers, we have developed an unparalleled range of Fast Recovery Diodes. These diodes are available with blocking voltages up to 6 kV making them suitable for operation with DC link voltages up to 3.3 kV and average current ratings to 4 kA depending upon type. The devices utilise compression bonding along with both alloyed and floating silicon technologies to deliver robust devices that you can rely on in demanding applications. This range has been sub-classified as follows to aid appropriate device selection; Fast Recovery, Soft Recovery, Extra Fast Recovery Diodes and HP Sonic-FRDs.

Standard Fast Recovery Capsule Types

Fast Recovery Diodes: These parts are particularly suitable for use as anti-parallel diodes in Gate Turn-Off thyristors and Fast Thyristor inverters, diodes for choppers.

Type	V_{RRM}	I_{FAV}	I_{FSM}	I^2t	Typ. Reverse Recovery T_J = 150°C				V_{T0}	r_T	R_{thJK} d.c.	Fig. No.
Part No.		T_K = 55°C	10 ms ½ sine $V_R \leq 60\%\ V_{RRM}$		t_{rr}	Q_{rr}	@I_{FM}	@-di_F/dt	@T_{JM}		180° sine	
	V	A	A	A2s	µs	µC	A	A/µs	V	mΩ	K/W	
M0588LC400	4000	588	3955	78.2 x 10^3	3.50	450	1000	60	2.320	1.770	0.0330	W4
M0588LC450	4500	588	3955	78.2 x 10^3	3.50	450	1000	60	2.320	1.770	0.0330	W4
M0790YC200	2000	790	9000	405 x 10^3	4.00	425	1000	60	1.272	0.584	0.0500	W2
M0790YC250	2500	790	9000	405 x 10^3	4.00	425	1000	60	1.272	0.584	0.0500	W2
M0790YH200	2000	790	9000	405 x 10^3	4.00	425	1000	60	1.272	0.584	0.0500	W3
M0790YH250	2500	790	9000	405 x 10^3	4.00	425	1000	60	1.272	0.584	0.0500	W3
M0914LC200	2000	914	8500	361 x 10^3	3.20	300	1000	60	1.768	0.653	0.0320	W4
M0914LC250	2500	914	8500	361 x 10^3	3.20	300	1000	60	1.768	0.653	0.0320	W4
M1010NC400	4000	1010	9600	461 x 10^3	3.20	1450	1000	200	1.700	1.030	0.0220	W5
M1010NC450	4500	1010	9600	461 x 10^3	3.20	1450	1000	200	1.700	1.030	0.0220	W5
M1010ND400	4000	1010	9600	461 x 10^3	3.20	1450	1000	200	1.700	1.030	0.0220	W37
M1010ND450	4500	1010	9600	461 x 10^3	3.20	1450	1000	200	1.700	1.030	0.0220	W37
M1163NC400	4000	1163	10800	583 x 10^3	6.40	1200	1000	60	1.500	0.770	0.0220	W5
M1163NC450	4500	1163	10800	583 x 10^3	6.40	1200	1000	60	1.500	0.770	0.0220	W5
M1163ND400	4000	1163	10800	583 x 10^3	6.40	1200	1000	60	1.500	0.770	0.0220	W37
M1163ND450	4500	1163	10800	583 x 10^3	6.40	1200	1000	60	1.500	0.770	0.0220	W37
M1502NC200	2000	1502	17000	1.45 x 10^6	3.50	350	1000	60	1.240	0.440	0.0220	W5
M1502NC250	2500	1502	17000	1.45 x 10^6	3.50	350	1000	60	1.240	0.440	0.0220	W5
M1502ND200	2000	1502	17000	1.45 x 10^6	3.50	350	1000	60	1.240	0.440	0.0220	W37
M1502ND250	2500	1502	17000	1.45 x 10^6	3.50	350	1000	60	1.240	0.440	0.0220	W37
M1583VC400	4000	1583	24800	3.08 x 10^6	5.00	2000	1000	200	1.693	0.525	0.0160	W6
M1583VC450	4500	1583	24800	3.08 x 10^6	5.00	2000	1000	200	1.693	0.525	0.0160	W6
M1583VF400	4000	1583	24800	3.08 x 10^6	5.00	2000	1000	200	1.693	0.525	0.0160	W43
M1583VF450	4500	1583	24800	3.08 x 10^6	5.00	2000	1000	200	1.693	0.525	0.0160	W43
M1609NC200	2000	1609	17500	1.53 x 10^6	3.20	800	1000	200	1.310	0.345	0.0220	W5
M1609NC260	2600	1609	17500	1.53 x 10^6	3.20	800	1000	200	1.310	0.345	0.0220	W5
M1609ND200	2000	1609	17500	1.53 x 10^6	3.20	800	1000	200	1.310	0.345	0.0220	W37
M1609ND260	2600	1609	17500	1.53 x 10^6	3.20	800	1000	200	1.310	0.345	0.0220	W37
M2273VC300	3000	2273	28000	3.92 x 10^6	8.50	2500	1000	60	1.239	0.244	0.0160	W6
M2273VC360	3600	2273	28000	3.92 x 10^6	8.50	2500	1000	60	1.239	0.244	0.0160	W6
M2273VF300	3000	2273	28000	3.92 x 10^6	8.50	2500	1000	60	1.239	0.244	0.0160	W43
M2273VF360	3600	2273	28000	3.92 x 10^6	8.50	2500	1000	60	1.239	0.244	0.0160	W43
M2408NC020	200	2408	24000	2.88 x 10^6	1.90	250	1000	200	1.065	0.122	0.0220	W5
M2408NC060	600	2408	24000	2.88 x 10^6	1.90	250	1000	200	1.065	0.122	0.0220	W5
M2408ND020	200	2408	24000	2.88 x 10^6	1.90	250	1000	200	1.065	0.122	0.0220	W37
M2408ND060	600	2408	24000	2.88 x 10^6	1.90	250	1000	200	1.065	0.122	0.0220	W37
M2639ZC420	4200	2639	27520	3.79 x 10^6	8.50	2300	1000	60	1.380	0.290	0.0110	W7
M2639ZC450	4500	2639	27520	3.79 x 10^6	8.50	2300	1000	60	1.380	0.290	0.0110	W7
M2639ZD420	4200	2639	27520	3.79 x 10^6	8.50	2300	1000	60	1.380	0.290	0.0110	W42
M2639ZD450	4500	2639	27520	3.79 x 10^6	8.50	2300	1000	60	1.380	0.290	0.0110	W42
M2698ZC250	2500	2698	27800	3.86 x 10^6	6.20	1200	1000	60	1.000	0.330	0.0110	W7
M2698ZC280	2800	2698	27800	3.86 x 10^6	6.20	1200	1000	60	1.000	0.330	0.0110	W7
M2698ZC350	3500	2698	27800	3.86 x 10^6	6.20	1200	1000	60	1.000	0.330	0.0110	W7
M2698ZD250	2500	2698	27800	3.86 x 10^6	6.20	1200	1000	60	1.000	0.330	0.0110	W42
M2698ZD280	2800	2698	27800	3.86 x 10^6	6.20	1200	1000	60	1.000	0.330	0.0110	W42
M2698ZD350	3500	2698	27800	3.86 x 10^6	6.20	1200	1000	60	1.000	0.330	0.0110	W42
M2837VC180	1800	2837	31800	5.10 x 10^6	7.00	2100	1000	60	0.900	0.170	0.0160	W6
M2837VC250	2500	2837	31800	5.10 x 10^6	7.00	2100	1000	60	0.900	0.170	0.0160	W6
M2837VF180	1800	2837	31800	5.10 x 10^6	7.00	2100	1000	60	0.900	0.170	0.0160	W43
M2837VF250	2500	2837	31800	5.10 x 10^6	7.00	2100	1000	60	0.900	0.170	0.0160	W43
M3770ZC200	2000	3770	44000	9.68 x 10^6	7.00	2000	1000	60	1.190	0.118	0.0110	W7
M3770ZC240	2400	3770	44000	9.68 x 10^6	7.00	2000	1000	60	1.190	0.118	0.0110	W7
M3770ZC300	3000	3770	44000	9.68 x 10^6	7.00	2000	1000	60	1.190	0.118	0.0110	W7
M3770ZD200	2000	3770	44000	9.68 x 10^6	7.00	2000	1000	60	1.190	0.118	0.0110	W42
M3770ZD240	2400	3770	44000	9.68 x 10^6	7.00	2000	1000	60	1.190	0.118	0.0110	W42
M3770ZD300	3000	3770	44000	9.68 x 10^6	7.00	2000	1000	60	1.190	0.118	0.0110	W42

Package style

Outlines on pages O-01...O-29

W2 Weight 80 g

W3 Weight 140 g

W4 Weight 340 g

W5 Weight 510 g

W6 Weight 1000 g

W7 Weight 1700 g

W37 Weight 510 g

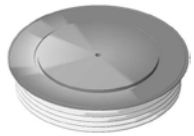

W42 Weight 1200 g

W43 Weight 800 g

T_{JM} = 150°C

Soft Recovery Diodes

Our soft recovery diodes are available with a range of reverse recovery characteristics tailored to meet the requirements of both freewheeling and snubber applications.These devices are available with blocking voltages up to 6kV and average currents up to 2413A. 38mm to 75mm diameter silicon slices. These parts are particularly suitable where soft recovery is required, such as RCD snubbers, voltage clamping and snubberless applications.

Stud Types

Type	V_{RRM}	I_{FAV}	I_{FSM}	I^2t	Typ. Reverse Recovery				V_{T0}	r_T	T_{JM}	R_{thJC}	Fig. No.	Package style
		T_C = 55°C	10 ms ½ sine $V_R \leq 60\%\ V_{RRM}$		T_{JM}				@T_{JM}			d.c. 180° sine		Outlines on pages O-01...O-29
					t_{rr}	Q_{rr}	@ I_{FM}	@ $-di_F/dt$						
Part No.	V	A	A	A^2s	µs	µC	A	A/µs	V	mW	°C	K/W		
M0130RL200	2000	130	2240	25.0 x 10^3	2.60	430	1000	150	1.290	1.540	125	0.3000	W20	
M0130RL250	2500	130	2240	25.0 x 10^3	2.60	430	1000	150	1.290	1.540	125	0.3000	W20	
M0130SL200	2000	130	2240	25.0 x 10^3	2.60	430	1000	150	1.290	1.540	125	0.3000	W20	
M0130SL250	2500	130	2240	25.0 x 10^3	2.60	430	1000	150	1.290	1.540	125	0.3000	W20	
M0139RL120	1200	139	2450	30.0 x 10^3	1.00	125	1000	100	1.240	1.280	125	0.3000	W20	
M0139RL180	1800	139	2450	30.0 x 10^3	1.00	125	1000	100	1.240	1.280	125	0.3000	W20	
M0139SL120	1200	139	2450	30.0 x 10^3	1.00	125	1000	100	1.240	1.280	125	0.3000	W20	
M0139SL180	1800	139	2450	30.0 x 10^3	1.00	125	1000	100	1.240	1.280	125	0.3000	W20	
M0268RC200	2000	268	4250	90.3 x 10^3	2.80	300	1000	150	1.210	1.200	125	0.1300	W24	
M0268RC250	2500	268	4250	90.3 x 10^3	2.80	300	1000	150	1.210	1.200	125	0.1300	W24	
M0268SC200	2000	268	4250	90.3 x 10^3	2.80	300	1000	150	1.210	1.200	125	0.1300	W24	
M0268SC250	2500	268	4250	90.3 x 10^3	2.80	300	1000	150	1.210	1.200	125	0.1300	W24	
M0268RJ200	2000	268	4250	90.3 x 10^3	2.80	300	1000	150	1.210	1.200	125	0.1300	W22	
M0268RJ250	2500	268	4250	90.3 x 10^3	2.80	300	1000	150	1.210	1.200	125	0.1300	W22	
M0268SJ200	2000	268	4250	90.3 x 10^3	2.80	300	1000	150	1.210	1.200	125	0.1300	W22	
M0268SJ250	2500	268	4250	90.3 x 10^3	2.80	300	1000	150	1.210	1.200	125	0.1300	W22	
M0280RC200	2000	280	4500	100 x 10^3	2.80	610	1000	150	1.280	0.920	125	0.1300	W24	
M0280RC250	2500	280	4500	100 x 10^3	2.80	610	1000	150	1.280	0.920	125	0.1300	W24	
M0280SC200	2000	280	4500	100 x 10^3	2.80	610	1000	150	1.280	0.920	125	0.1300	W24	
M0280SC250	2500	280	4500	100 x 10^3	2.80	610	1000	150	1.280	0.920	125	0.1300	W24	
M0280RJ200	2000	280	4500	100 x 10^3	2.80	610	1000	150	1.280	0.920	125	0.1300	W22	
M0280RJ250	2500	280	4500	100 x 10^3	2.80	610	1000	150	1.280	0.920	125	0.1300	W22	
M0280SJ200	2000	280	4500	100 x 10^3	2.80	610	1000	150	1.280	0.920	125	0.1300	W22	
M0280SJ250	2500	280	4500	100 x 10^3	2.80	610	1000	150	1.280	0.920	125	0.1300	W22	
M0334RC160	1600	334	4500	101 x 10^3	3.50	290	550	40	1.000	0.740	125	0.1300	W24	
M0334RC200	2000	334	4500	101 x 10^3	3.50	290	550	40	1.000	0.740	125	0.1300	W24	
M0334SC160	1600	334	4500	101 x 10^3	3.50	290	550	40	1.000	0.740	125	0.1300	W24	
M0334SC200	2000	334	4500	101 x 10^3	3.50	290	550	40	1.000	0.740	125	0.1300	W24	
M0334RJ160	1600	334	4500	101 x 10^3	3.50	290	550	40	1.000	0.740	125	0.1300	W22	
M0334RJ200	2000	334	4500	101 x 10^3	3.50	290	550	40	1.000	0.740	125	0.1300	W22	
M0334SJ160	1600	334	4500	101 x 10^3	3.50	290	550	40	1.000	0.740	125	0.1300	W22	
M0334SJ200	2000	334	4500	101 x 10^3	3.50	290	550	40	1.000	0.740	125	0.1300	W22	
M0336RA120	1200	336	4500	101 x 10^3	3.00	140	550	40	1.020	0.700	125	0.1300	W23	
M0336RA140	1400	336	4500	101 x 10^3	3.00	140	550	40	1.020	0.700	125	0.1300	W23	
M0336SA120	1200	336	4500	101 x 10^3	3.00	140	550	40	1.020	0.700	125	0.1300	W23	
M0336SA140	1400	336	4500	101 x 10^3	3.00	140	550	40	1.020	0.700	125	0.1300	W23	

S R

W20 Weight 85 g

W22 Weight 200 g

W23 Weight 250 g

W24 Weight 250 g

Capsule Types

Type Part No.	V_{RRM}	I_{FAV}	I_{FSM}	I2t	Typ. Reverse Recovery				V_{T0}	r_T	T_{JM}	R_{thJK}	Fig. No.	Package style Outlines on pages O-01...O-29
		T_K = 55°C	10 ms ½ sine $V_R \leq 60\%\ V_{RRM}$		T_{JM}				@T_{JM}			d.c. 180° sine		
					t_{rr}	Q_{rr}	@I_{FM}	@-di_F/dt						
	V	A	A	A2s	µs	µC	A	A/µs	V	mΩ	°C	K/W		
M0225YH360	3600	225	2000	20 x 10^3	3.00	220	550	40	1.900	4.160	150	0.1000	W3	
M0225YH450	4500	225	2000	20 x 10^3	3.00	220	550	40	1.900	4.160	150	0.1000	W3	
M0310YH300	3000	310	4590	105 x 10^3	2.80	275	1000	100	1.490	2.060	150	0.1000	W3	
M0310YH350	3500	310	4590	105 x 10^3	2.80	275	1000	100	1.490	2.060	150	0.1000	W3	
M0347WC200	2000	347	4250	90.3 x 10^3	2.80	210	550	40	1.210	1.200	125	0.0900	W1	
M0347WC250	2500	347	4250	90.3 x 10^3	2.80	210	550	40	1.210	1.200	125	0.0900	W1	
M0358WC120	1200	358	2450	30 x 10^3	1.40	125	1000	100	1.460	0.800	125	0.0900	W1	
M0358WC180	1800	358	2450	30 x 10^3	1.40	125	1000	100	1.460	0.800	125	0.0900	W1	
M0367WC220	2200	367	4500	101 x 10^3	3.30	300	550	40	1.280	0.920	125	0.0900	W1	W1 Weight 70 g
M0367WC280	2800	367	4500	101 x 10^3	3.30	300	550	40	1.280	0.920	125	0.0900	W1	
M0371YH350	3500	371	4900	120 x 10^3	3.20	1260	1000	200	1.050	1.650	150	0.1000	W3	
M0371YH450	4500	371	4900	120 x 10^3	3.20	1260	1000	200	1.050	1.650	150	0.1000	W3	
M0433WC120	1200	433	4500	101 x 10^3	3.50	270	550	40	1.000	0.740	125	0.0900	W1	
M0433WC160	1600	433	4500	101 x 10^3	3.50	270	550	40	1.000	0.740	125	0.0900	W1	
M0433WC200	2000	433	4500	101 x 10^3	3.50	270	550	40	1.000	0.740	125	0.0900	W1	
M0437WC080	800	437	4500	101 x 10^3	3.00	140	550	40	1.020	0.700	125	0.0900	W1	
M0437WC140	1400	437	4500	101 x 10^3	3.00	140	550	40	1.020	0.700	125	0.0900	W1	
M0451YC160	1600	451	4500	101 x 10^3	2.80	220	550	40	1.000	0.740	125	0.0850	W2	
M0451YC200	2000	451	4500	101 x 10^3	2.80	220	550	40	1.000	0.740	125	0.0850	W2	W2 Weight 80 g
M0659LC400	4000	659	7620	290 x 10^3	4.20	800	1000	60	1.710	0.925	125	0.0330	W4	
M0659LC450	4500	659	7620	290 x 10^3	4.20	800	1000	60	1.710	0.925	125	0.0330	W4	
M0710LC560	5600	710	8400	353 x 10^3	4.00	2100	1000	200	1.450	0.875	125	0.0330	W4	
M0710LC600	6000	710	8400	353 x 10^3	4.00	2100	1000	200	1.450	0.875	125	0.0330	W4	
M0736LC400	4000	736	9000	405 x 10^3	5.20	1250	1000	60	1.606	0.700	125	0.0330	W4	
M0736LC450	4500	736	9000	405 x 10^3	5.20	1250	1000	60	1.606	0.700	125	0.0330	W4	
M0759YC120	1200	759	9500	450 x 10^3	2.00	80	550	50	1.130	0.380	125	0.0500	W2	
M0759YC160	1600	759	9500	450 x 10^3	2.00	80	550	50	1.130	0.380	125	0.0500	W2	
M0759YH120	1200	759	9500	450 x 10^3	2.00	80	550	50	1.130	0.380	125	0.0500	W3	
M0759YH160	1600	759	9500	450 x 10^3	2.00	80	550	50	1.130	0.380	125	0.0500	W3	
M0859LC140	1400	859	10000	500 x 10^3	3.00	280	800	50	1.170	0.320	125	0.0440	W4	W3 Weight 140 g
M0859LC160	1600	859	10000	500 x 10^3	3.00	280	800	50	1.170	0.320	125	0.0440	W4	
M0863LC260	2600	863	10000	500 x 10^3	4.80	950	1000	60	1.308	0.538	125	0.0330	W4	
M0863LC300	3000	863	10000	500 x 10^3	4.80	950	1000	60	1.308	0.538	125	0.0330	W4	
M0863LC360	3600	863	10000	500 x 10^3	4.80	950	1000	60	1.308	0.538	125	0.0330	W4	
M0872LC140	1400	872	10000	500 x 10^3	4.00	700	1000	60	1.090	0.340	125	0.0440	W4	
M0872LC180	1800	872	10000	500 x 10^3	4.00	700	1000	60	1.090	0.340	125	0.0440	W4	
M0872LC210	2100	872	10000	500 x 10^3	4.00	700	1000	60	1.090	0.340	125	0.0440	W4	
M0955LC200	2000	955	11700	684 x 10^3	3.40	500	1000	60	1.440	0.330	125	0.0330	W4	
M0955LC250	2500	955	11700	684 x 10^3	3.40	500	1000	60	1.440	0.330	125	0.0330	W4	
M1022LC120	1200	1022	14000	980 x 10^3	3.00	375	1000	60	1.240	0.330	125	0.0330	W4	W4 Weight 340 g
M1022LC160	1600	1022	14000	980 x 10^3	3.00	375	1000	60	1.240	0.330	125	0.0330	W4	
M1022LC200	2000	1022	14000	980 x 10^3	3.00	375	1000	60	1.240	0.330	125	0.0330	W4	

Capsule Types

Type Part No.	V_{RRM}	I_{FAV}	I_{FSM}	I^2t	Typ. Reverse Recovery T_{JM}				V_{T0}	r_T	T_{JM}	R_{thJK} d.c. 180° sine	Fig. No.	Package style Outlines on pages O-01...O-29
		T_K = 55°C	10 ms ½ sine $V_R \leq 60\%\ V_{RRM}$		t_{rr}	Q_{rr}	@I_{FM}	@-di_F/dt	@T_{JM}					
	V	A	A	A^2s	µs	µC	A	A/µs	V	mΩ	°C	K/W		
M1080LC100	1000	1080	13500	910 x 10^3	1.90	85	1000	60	1.125	0.314	125	0.0330	W4	
M1080LC120	1200	1080	13500	910 x 10^3	1.90	85	1000	60	1.125	0.314	125	0.0330	W4	
M1102NC500	5000	1102	13000	845 x 10^3	5.50	3300	1000	200	1.360	0.557	125	0.0220	W5	
M1102NC600	6000	1102	13000	845 x 10^3	5.50	3300	1000	200	1.360	0.557	125	0.0220	W5	
M1102ND500	5000	1102	13000	845 x 10^3	5.50	3300	1000	200	1.360	0.557	125	0.0220	W37	
M1102ND600	6000	1102	13000	845 x 10^3	5.50	3300	1000	200	1.360	0.557	125	0.0220	W37	
M1104NC400	4000	1104	13000	845 x 10^3	6.00	2100	1000	60	1.370	0.553	125	0.0220	W5	
M1104NC450	4500	1104	13000	845 x 10^3	6.00	2100	1000	60	1.370	0.553	125	0.0220	W5	W5 Weight 510 g
M1104ND400	4000	1104	13000	845 x 10^3	6.00	2100	1000	60	1.370	0.553	125	0.0220	W37	
M1104ND450	4500	1104	13000	845 x 10^3	6.00	2100	1000	60	1.370	0.553	125	0.0220	W37	
M1242NC260	2600	1242	16400	1.34 x 10^6	6.00	1500	1000	60	1.270	0.420	125	0.0220	W5	
M1242NC360	3600	1242	16400	1.34 x 10^6	6.00	1500	1000	60	1.270	0.420	125	0.0220	W5	
M1242ND260	2600	1242	16400	1.34 x 10^6	6.00	1500	1000	60	1.270	0.420	125	0.0220	W37	
M1242ND360	3600	1242	16400	1.34 x 10^6	6.00	1500	1000	60	1.270	0.420	125	0.0220	W37	
M1494NC180	1800	1494	19600	1.92 x 10^6	3.90	815	1000	60	1.150	0.265	125	0.0220	W5	
M1494NC250	2500	1494	19600	1.92 x 10^6	3.90	815	1000	60	1.150	0.265	125	0.0220	W5	W6 Weight 1000 g
M1494ND180	1800	1494	19600	1.92 x 10^6	3.90	815	1000	60	1.150	0.265	125	0.0220	W37	
M1494ND250	2500	1494	19600	1.92 x 10^6	3.90	815	1000	60	1.150	0.265	125	0.0220	W37	
M1565VC360	3600	1565	19700	1.94 x 10^6	5.00	2800	1000	200	1.090	0.360	125	0.0180	W6	
M1565VC400	4000	1565	19700	1.94 x 10^6	5.00	2800	1000	200	1.090	0.360	125	0.0180	W6	
M1565VC450	4500	1565	19700	1.94 x 10^6	5.00	2800	1000	200	1.090	0.360	125	0.0180	W6	
M1565VF360	3600	1565	19700	1.94 x 10^6	5.00	2800	1000	200	1.090	0.360	125	0.0180	W43	
M1565VF400	4000	1565	19700	1.94 x 10^6	5.00	2800	1000	200	1.090	0.360	125	0.0180	W43	
M1565VF450	4500	1565	19700	1.94 x 10^6	5.00	2800	1000	200	1.090	0.360	125	0.0180	W43	W37 Weight 510 g
M1858NC120	1200	1858	25000	3.25 x 10^6	2.50	120	1000	60	1.127	0.127	125	0.0220	W5	
M1858NC160	1600	1858	25000	3.25 x 10^6	2.50	120	1000	60	1.127	0.127	125	0.0220	W5	
M1858ND120	1200	1858	25000	3.25 x 10^6	2.50	120	1000	60	1.127	0.127	125	0.0220	W37	
M1858ND160	1600	1858	25000	3.25 x 10^6	2.50	120	1000	60	1.127	0.127	125	0.0220	W37	
M2322ZC300	3000	2322	23000	2.64 x 10^6	6.50	3200	1000	150	1.670	0.186	125	0.0110	W7	
M2322ZC400	4000	2322	23000	2.64 x 10^6	6.50	3200	1000	150	1.670	0.186	125	0.0110	W7	
M2322ZD300	3000	2322	23000	2.64 x 10^6	6.50	3200	1000	150	1.670	0.186	125	0.0110	W42	
M2322ZD400	4000	2322	23000	2.64 x 10^6	6.50	3200	1000	150	1.670	0.186	125	0.0110	W42	W42 Weight 1200 g
M2413VC200	2000	2413	32000	5.12 x 10^6	5.00	2500	1000	200	1.090	0.121	125	0.0160	W6	
M2413VC250	2500	2413	32000	5.12 x 10^6	5.00	2500	1000	200	1.090	0.121	125	0.0160	W6	
M2413VF200	2000	2413	32000	5.12 x 10^6	5.00	2500	1000	200	1.090	0.121	125	0.0160	W43	
M2413VF250	2500	2413	32000	5.12 x 10^6	5.00	2500	1000	200	1.090	0.121	125	0.0160	W43	

W43 Weight 800 g

Extra Fast Recovery Diodes

Featuring a combination of the latest developments in lifetime engineering technologies. These products are designed to offer the lowest practical values of reverse recovery current whilst offering wide safe operating area and high di/dt capability required by modern switching components such as IGBT's and GCT's as well as pulsed power applications.

Capsule Types

Type Part No.	V_{RRM}	I_{FAV}	I_{FSM}	I^2t	Typ. Reverse Recovery					V_{T0}	r_T	T_{JM}	R_{thJK}	Fig. No.
		T_K = 55°C	10 ms ½ sine $V_R \leq 60\%\ V_{RRM}$		T_{JM}					@T_{JM}			d.c. 180° sine	
					I_{rm}	t_{rr}	Q_{rr}	@I_{FM}	@ $-di_F/dt$					
➢ New	V	A	A	A^2s	A	µs	µC	A	A/µs	V	mΩ	°C	K/W	
F0240YC250	2500	240	3100	48.1 x 10^3	190	1.65	300	550	300	2.271	2.853	150	0.1000	W2
F0240YC300	3000	240	3100	48.1 x 10^3	190	1.65	300	550	300	2.271	2.853	150	0.1000	W2
F0240YH250	2500	240	3100	48.1 x 10^3	190	1.65	300	550	300	2.271	2.853	150	0.1000	W3
F0240YH300	3000	240	3100	48.1 x 10^3	190	1.65	300	550	300	2.271	2.853	150	0.1000	W3
F0300WC140	1400	240	2700	36.5 x 10^3	530	0.30	140	300	2000	1.760	2.210	125	0.0950	W1
F0300WC180	1800	240	2700	36.5 x 10^3	530	0.30	140	300	2000	1.760	2.210	125	0.0950	W1
F0800LC140	1400	775	7630	291 x 10^3	380	1.10	500	800	1000	1.494	0.692	125	0.0320	W4
F0800LC180	1800	775	7630	291 x 10^3	380	1.10	500	800	1000	1.494	0.692	125	0.0320	W4
F0900VC450	4500	816	10450	546 x 10^3	3000	1.40	2500	900	2000	2.024	1.274	115	0.0160	W6
F0900VC520	5200	816	10450	546 x 10^3	3000	1.40	2500	900	2000	2.024	1.274	115	0.0160	W6
F0900VF450	4500	816	10450	546 x 10^3	3000	1.40	2500	900	2000	2.024	1.274	115	0.0160	W43
F0900VF520	5200	816	10450	546 x 10^3	3000	1.40	2500	900	2000	2.024	1.274	115	0.0160	W43
F1000LC080	800	826	8500	361 x 10^3	320	1.60	450	1000	800	1.530	0.547	125	0.0320	W4
F1000LC120	1200	826	8500	361 x 10^3	320	1.60	450	1000	800	1.530	0.547	125	0.0320	W4
F1300NC45P	4500	1346	20800	2.16 x 10^6	470	4.30	2150	1000	200	1.569	0.318	140	0.0240	W5
F1300NC50P	5000	1346	20800	2.16 x 10^6	470	4.30	2150	1000	200	1.569	0.318	140	0.0240	W5
F1300NC55P	5500	1346	20800	2.16 x 10^6	470	4.30	2150	1000	200	1.569	0.318	140	0.0240	W5
F1300NH45P	4500	1346	20800	2.16 x 10^6	470	4.30	2150	1000	200	1.569	0.318	140	0.0240	W47
F1300NH50P	5000	1346	20800	2.16 x 10^6	470	4.30	2150	1000	200	1.569	0.318	140	0.0240	W47
F1300NH55P	5500	1346	20800	2.16 x 10^6	470	4.30	2150	1000	200	1.569	0.318	140	0.0240	W47
F1400NC140	1400	1093	17250	1.49 x 10^6	800	1.50	1000	1400	1000	1.618	0.388	125	0.0240	W5
F1400NC180	1800	1093	17250	1.49 x 10^6	800	1.50	1000	1400	1000	1.618	0.388	125	0.0240	W5
F1400ND140	1400	1093	17250	1.49 x 10^6	800	1.50	1000	1400	1000	1.618	0.388	125	0.0240	W37
F1400ND180	1800	1093	17250	1.49 x 10^6	800	1.50	1000	1400	1000	1.618	0.388	125	0.0240	W37
F1500NC200	2000	1054	13750	950 x 10^3	1065	1.50	1500	1500	2000	1.372	0.535	125	0.0240	W5
F1500NC250	2500	1054	13750	950 x 10^3	1065	1.50	1500	1500	2000	1.372	0.535	125	0.0240	W5
F1600NC080	800	1326	20000	2.0 x 10^6	480	2.30	700	1600	800	1.320	0.268	125	0.0240	W5
F1600NC120	1200	1326	20000	2.0 x 10^6	480	2.30	700	1600	800	1.320	0.268	125	0.0240	W5

W1 Weight 70 g

W2 Weight 80 g

W3 Weight 140 g

W4 Weight 340 g

W5 Weight 510 g

Outlines on pages
O-01...O-29

W6 Weight 1000 g

W37 Weight 510 g

W43 Weight 800 g

W47 Weight 250 g

High Power Sonic FRD's

Introducing a world-leading class of ultra fast and ultra soft recovery diode available from 1.4kV to 4.5kV in current ratings from 170 to 4000A. These diodes incorporate a unique manufacturing process and lifetime control to offer a class leading trade-off between conduction and switching loses. The wide safe operating area (SOA) makes them ideal as freewheeling diodes for snubberless IGBT and IGCT applications. In fact, any application which requires a fast, low loss diode. For example, traction, medium voltage drives, induction heating and pulsed power applications.

Capsule Types

Type	V_{RRM}	I_{FAV}	I_{FSM}	I^2t	Typ. Reverse Recovery					V_{T0}	r_T	T_{JM}	R_{thJK}	Fig. No.
		T_K = 55°C	10 ms ½ sine $V_R \leq 60\%\ V_{RRM}$		I_{rm}	t_{rr}	T_{JM} Q_{rr}	@ I_{FM}	@-di_F/dt	@T_{JM}			180° Sine	
Part No. ➢ New	V	A	A	A^2s	A	µs	µC	A	A/µs	V	mΩ	°C	K/W	
E0170YH40C	4000	208	1800	16.2 x 10^3	125	1.60	215	170	300	2.340	7.650	150	0.073	W3
E0170YH45C	4500	208	1800	16.2 x 10^3	125	1.60	215	170	200	2.340	7.650	150	0.073	W3
E0280YH20C	2000	391	3200	51.2 x 10^3	225	2.30	520	280	300	1.660	1.720	150	0.073	W3
E0280YH25C	2500	391	3200	51.2 x 10^3	225	2.30	520	280	300	1.660	1.720	150	0.073	W3
E0460QC40C	4000	532	5750	165 x 10^3	450	1.00	900	500	1500	2.150	3.040	150	0.029	W68
E0460QC45C	4500	532	5750	165 x 10^3	450	1.00	900	500	1500	2.150	3.040	150	0.029	W68
E0660NC40C	4000	783	7100	252 x 10^3	625	1.75	1100	660	850	2.270	1.960	150	0.020	W5
E0660NC45C	4500	783	7100	252 x 10^3	625	1.75	1100	660	850	2.270	1.960	150	0.020	W5
E0660NH40C	4500	783	7100	252 x 10^3	625	1.75	1100	660	850	2.270	1.960	150	0.020	W47
E0660NH45C	4500	783	7100	252 x 10^3	625	1.75	1100	660	850	2.270	1.960	150	0.020	W47
E0800QC20C	2000	960	10700	575 x 10^3	720	1.60	1420	800	1500	1.410	0.839	150	0.029	W68
E0800QC25C	2500	960	10700	575 x 10^3	720	1.60	1420	800	1500	1.410	0.839	150	0.029	W68
E1200NC20C	2000	1473	12900	832 x 10^3	650	3.80	2000	1200	1500	1.620	0.440	150	0.020	W5
E1200NC25C	2500	1473	12900	832 x 10^3	650	3.80	2000	1200	1500	1.620	0.440	150	0.020	W5
E1200NH20C	2000	1473	12900	832 x 10^3	650	3.80	2000	1200	1500	1.620	0.440	150	0.020	W47
E1200NH25C	2500	1473	12900	832 x 10^3	650	3.80	2000	1200	1500	1.620	0.440	150	0.020	W47
E1300VF40C	4000	1350	14000	1.08 x 10^6	1500	1.10	2150	1300	3000	2.310	0.930	150	0.013	W43
E1300VF45C	4500	1350	14000	1.08 x 10^6	1500	1.10	2150	1300	3000	2.310	0.930	150	0.013	W43
E1500NC36P	3600	1280	17050	1.45 x 10^6	1425	2.80	2750	1000	1000	1.417	0.656	140	0.019	W5
E1500NC42P	4200	1280	17050	1.45 x 10^6	1425	2.80	2750	1000	1000	1.417	0.656	140	0.019	W5
E1500NC48P	4800	1280	17050	1.45 x 10^6	1425	2.80	2750	1000	1000	1.417	0.656	140	0.019	W5
E1500NH36P	3600	1280	17050	1.45 x 10^6	1425	2.80	2750	1000	1000	1.417	0.656	140	0.019	W47
E1500NH42P	4200	1280	17050	1.45 x 10^6	1425	2.80	2750	1000	1000	1.417	0.656	140	0.019	W47
E1500NH48P	4800	1280	17050	1.45 x 10^6	1425	2.80	2750	1000	1000	1.417	0.656	140	0.019	W47
E2000NC140	1400	1568	15000	1.13 x 10^6	1870	1.00	1670	2000	4000	1.770	0.350	150	0.020	W5
E2000NC170	1700	1568	15000	1.13 x 10^6	1870	1.00	1670	2000	4000	1.770	0.350	150	0.020	W5
E2000NH140	1400	1568	15000	1.13 x 10^6	1870	1.00	1670	2000	4000	1.770	0.350	150	0.020	W47
E2000NH170	1700	1568	15000	1.13 x 10^6	1870	1.00	1670	2000	4000	1.770	0.350	150	0.020	W47
E2250VF20C	2000	2426	25200	3.17 x 10^6	1650	1.90	3700	2250	2500	1.510	0.250	150	0.013	W43
E2250VF25C	2500	2426	25200	3.17 x 10^6	1650	1.90	3700	2250	2500	1.510	0.250	150	0.013	W43
E2400TC40C	4000	2233	25600	3.29 x 10^6	2050	1.50	3700	2400	3000	2.060	0.590	150	0.008	W28
E2400TC45C	4500	2233	25600	3.29 x 10^6	2050	1.50	3700	2400	3000	2.060	0.590	150	0.008	W28
E4000TC20C	2000	4080	50000	12.5 x 10^6	2480	2.50	6700	4000	3500	1.406	0.149	150	0.008	W28
E4000TC25C	2500	4080	50000	12.5 x 10^6	2480	2.50	6700	4000	3500	1.406	0.149	150	0.008	W28

Outlines on pages O-01...O-29

W3 Weight 140 g

W5 Weight 510 g

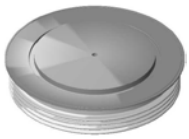

W28 Weight 1230 g

W43 Weight 800 g

W47 Weight 250 g

W68 Weight 300 g

Phase Control Thyristors

IXYS UK provides one of the most comprehensive ranges of standard phase control thyristors in the industry. Devices with voltage ranges from 400V to 6500V are available, making them suitable for applications with line voltages from 230V to over 1000V (higher voltage applications are now served by our range of Medium Voltage Thyristors). IXYS UK Westcode Ltd. is a leading supplier of phase control products into demanding markets such as industrial DC drives, controlled rectifiers, marine/rail propulsion systems, wind power converters, electrochemical power supplies and soft starters. These devices are optimised to give low conduction losses and are primarily intended for applications with line frequencies up to 400Hz.

The Wespack outline (WPxx) is a new concept in phase control thyristors for applications requiring devices rated to 2200V. It gives the maximum power rating for weight and volume without compromising on quality and reliability. It also gives the maximum current rating and lowest thermal resistance for the package size.

The newest additions to IXYS UK's phase control thyristor range are the 83mm dia Si capsules. These devices are of alloyed construction offering better thermal and electromechanical capability and are available with current ratings up to 4340A and voltage ratings up to 4500V.

Stud Types

Part No.	V_{DRM} V_{RRM}	I_{TAV} T_C = 55°C	I_{TSM} 10 ms ½ sine $V_R \leq 60\%\ V_{RRM}$	I^2t	V_{T0} @T_{JM}	r_T	T_{JM}	R_{thJC} d.c. 180° sine	R_{thJC} 120° Rect.	Fig. No.
	V	A	A	A^2s	V	mΩ	°C	K/W	K/W	
N0131SH120	1200	131	1700	14.5 x 10^3	1.570	2.290	125	0.2300	0.2800	W17
N0131SH160	1600	131	1700	14.5 x 10^3	1.570	2.290	125	0.2300	0.2800	W17
N0180SH120	1200	180	2450	30.0 x 10^3	0.900	1.790	125	0.2300	0.2800	W17
N0180SH160	1600	180	2450	30.0 x 10^3	0.900	1.790	125	0.2300	0.2800	W17
N0290SC120	1200	290	4200	88.2 x 10^3	1.080	1.300	125	0.1200	0.1400	W18
N0290SC160	1600	290	4200	88.2 x 10^3	1.080	1.300	125	0.1200	0.1400	W18
N0335SC120	1200	335	4650	108 x 10^3	0.920	0.990	125	0.1200	0.1400	W18
N0335SC160	1600	335	4650	108 x 10^3	0.920	0.990	125	0.1200	0.1400	W18
N0416SC040	400	416	6000	180 x 10^3	0.850	0.535	125	0.1200	0.1400	W18
N0416SC080	800	416	6000	180 x 10^3	0.850	0.535	125	0.1200	0.1400	W18

Outlines on pages
O-01...O-29

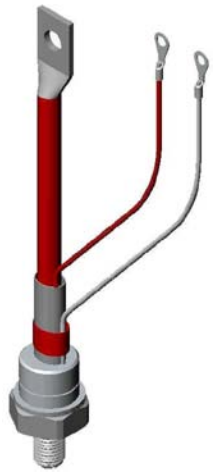

W17 Weight 130 g

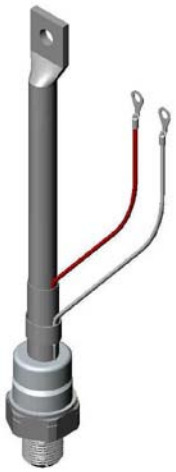

W18 Weight 280 g

Phase Control Thyristors

Capsule Types

Type Part No. ○ Not for new design ➢ New	V_{DRM} V_{RRM} V	I_{TAV} T_K = 55°C A	I_{TSM} 10 ms ½ sine $V_R \leq 60\%\ V_{RRM}$ A	I^2t A^2s	V_{T0} @T_{JM} V	r_T mΩ	T_{JM} °C	R_{thJC} 180° Sine K/W	R_{thJC} 120° Rect. K/W	Fig. No.	Package style Outlines on pages O-01...O-29
○ **N0255WC120**	1200	255	2450	30.0 x 10^3	0.900	1.790	125	0.1350	0.1900	W8	
○ **N0255WC160**	1600	255	2450	30.0 x 10^3	0.900	1.790	125	0.1350	0.1900	W8	
○ **N0392WC120**	1200	392	4650	108 x 10^3	0.920	0.990	125	0.0950	0.1100	W8	
○ **N0392WC160**	1600	392	4650	108 x 10^3	0.920	0.990	125	0.0950	0.1100	W8	
➢ **N0465WN140**	1400	465	4500	101 x 10^3	0.900	0.850	125	0.0800	0.0960	W90	
➢ **N0465WN160**	1600	465	4500	101 x 10^3	0.900	0.850	125	0.0800	0.0960	W90	
➢ **N0530YN220**	2200	530	6300	198 x 10^3	1.100	1.250	125	0.0480	0.0494	W91	
➢ **N0530YN250**	2500	530	6300	198 x 10^3	1.100	1.250	125	0.0480	0.0494	W91	W8 Weight 70 g
○ **N0606YS200**	2000	606	7100	252 x 10^3	1.103	0.804	125	0.0500	0.0580	W9	
○ **N0606YS240**	2400	606	7100	252 x 10^3	1.103	0.804	125	0.0500	0.0580	W9	
○ **N0606YS250**	2500	606	7100	252 x 10^3	1.103	0.804	125	0.0500	0.0580	W9	
N0616LC400	4000	616	5250	138 x 10^3	1.220	1.530	125	0.0320	0.0397	W10	
N0616LC450	4500	616	5250	138 x 10^3	1.220	1.530	125	0.0320	0.0397	W10	
N0634LC380	3800	634	7000	245 x 10^3	1.100	1.500	125	0.0320	0.0397	W10	
N0634LC420	4200	634	7000	245 x 10^3	1.100	1.500	125	0.0320	0.0397	W10	W9 Weight 90 g
N0646LC300	3000	646	5700	162 x 10^3	1.210	1.360	125	0.0320	0.0397	W10	
N0646LC360	3600	646	5700	162 x 10^3	1.210	1.360	125	0.0320	0.0397	W10	
○ **N0676YS120**	1200	676	7500	281 x 10^3	1.090	0.587	125	0.0500	0.0580	W9	
○ **N0676YS180**	1800	676	7500	281 x 10^3	1.090	0.587	125	0.0500	0.0580	W9	
○ **N0734YS120**	1200	734	8400	353 x 10^3	1.030	0.483	125	0.0500	0.0580	W9	
○ **N0734YS160**	1600	734	8400	353 x 10^3	1.030	0.483	125	0.0500	0.0580	W9	
○ **N0782YS120**	1200	782	9420	444 x 10^3	0.920	0.450	125	0.0500	0.0580	W9	
○ **N0782YS160**	1600	782	9420	444 x 10^3	0.920	0.450	125	0.0500	0.0580	W9	W10 Weight 340 g
➢ **N0795YN140**	1400	795	9450	444 x 10^3	0.950	0.450	125	0.0480	0.0494	W91	
➢ **N0795YN180**	1800	795	9450	444 x 10^3	0.950	0.450	125	0.0480	0.0494	W91	
N0845NC600 ø	6000	845	9500	451 x 10^3	1.100	0.890	115	0.0240	0.0271	W11	
N0845NC650 ø	6500	845	9500	451 x 10^3	1.100	0.890	115	0.0240	0.0271	W11	
N0845NG600 ø	6000	845	9500	451 x 10^3	1.100	0.890	115	0.0240	0.0271	W57	
N0845NG650 ø	6500	845	9500	451 x 10^3	1.100	0.890	115	0.0240	0.0271	W57	
N0882NC400	4000	882	7700	296 x 10^3	1.300	0.920	125	0.0240	0.0273	W11	
N0882NC450	4500	882	7700	296 x 10^3	1.300	0.920	125	0.0240	0.0273	W11	
N0910LC200	2000	910	9200	423 x 10^3	1.040	0.606	125	0.0320	0.0397	W10	W11 Weight 510 g
N0910LC260	2600	910	9200	423 x 10^3	1.040	0.606	125	0.0320	0.0397	W10	
N1010NC300	3000	1010	12100	732 x 10^3	1.170	0.687	125	0.0240	0.0273	W11	
N1010NC380	3800	1010	12100	732 x 10^3	1.170	0.687	125	0.0240	0.0273	W11	
➢ **N1075LN180**	1800	1075	15750	1.24 x 10^6	0.850	0.320	125	0.0410	0.0492	W92	
○ **N1114LC120**	1200	1114	12700	806 x 10^3	1.000	0.349	125	0.0320	0.0397	W10	
○ **N1114LC180**	1800	1114	12700	806 x 10^3	1.000	0.349	125	0.0320	0.0397	W10	
N1132NC300	3000	1132	14300	1.02 x 10^6	1.150	0.510	125	0.0240	0.0271	W11	
N1132NC320	3200	1132	14300	1.02 x 10^6	1.150	0.510	125	0.0240	0.0271	W11	
➢ **N1140LN140**	1400	1140	17500	1.53 x 10^6	0.820	0.280	125	0.0380	0.0456	W92	W12 Weight 1000 g
N1159NC380	3800	1159	14500	1.05 x 10^6	1.100	0.574	125	0.0220	0.0255	W11	
N1159NC420	4200	1159	14500	1.05 x 10^6	1.100	0.574	125	0.0220	0.0255	W11	
N1174JK200	2000	1174	13200	870 x 10^3	1.000	0.416	125	0.0270	0.0314	WP1	
N1174JK220	2200	1174	13200	870 x 10^3	1.000	0.416	125	0.0270	0.0314	WP1	
N1263JK160	1600	1263	15000	1.13 x 10^6	1.015	0.332	125	0.0270	0.0314	WP1	
N1263JK180	1800	1263	15000	1.13 x 10^6	1.015	0.332	125	0.0270	0.0314	WP1	
N1265LC120	1200	1226	15000	1.125 x 10^6	0.883	0.297	125	0.0320	0.0388	W10	
○ **N1265LC160**	1600	1226	15000	1.125 x 10^6	0.883	0.297	125	0.0320	0.0388	W10	

Capsule Types

Type Part No. ○ Not for new design ➢ New	V_{DRM} V_{RRM} V	I_{TAV} T_K = 55°C A	I_{TSM} 10 ms ½ sine $V_R \leq 60\%\ V_{RRM}$ A	I^2t A^2s	V_{T0} @T_{JM} V	r_T mΩ	T_{JM} °C	R_{thJC} 180° Sine K/W	R_{thJC} 120° Rect. K/W	Fig. No.	Package style Outlines on pages O-01...O-29
N1314NC300 †	3000	1314	16600	1.38×10^6	1.000	0.437	125	0.2200	0.0254	W11	
N1314NC360 †	3600	1314	16600	1.38×10^6	1.000	0.437	125	0.2200	0.0254	W11	
N1351VC400	4000	1351	17500	1.53×10^6	1.200	0.553	125	0.0170	0.0200	W12	
N1351VC450	4500	1351	17500	1.53×10^6	1.200	0.553	125	0.0170	0.0200	W12	
N1351VF400	4000	1351	17500	1.53×10^6	1.200	0.553	125	0.0170	0.0200	W62	
N1351VF450	4500	1351	17500	1.53×10^6	1.200	0.553	125	0.0170	0.0200	W62	
N1366JK080	800	1366	15900	1.26×10^6	0.985	0.270	125	0.0270	0.0314	WP1	
N1366JK120	1200	1366	15900	1.26×10^6	0.985	0.270	125	0.0270	0.0314	WP1	
N1366JK140	1400	1366	15900	1.26×10^6	0.985	0.270	125	0.0270	0.0314	WP1	
N1449QL200	2000	1410	17300	1.50×10^6	1.060	0.317	125	0.023	0.027	WP6	W13 Weight 1700 g
N1449QL220	2200	1410	17300	1.50×10^6	1.060	0.317	125	0.023	0.027	WP6	
N1467NC200	2000	1467	21500	2.31×10^6	1.000	0.272	125	0.0240	0.0271	W11	
N1467NC260	2600	1467	21500	2.31×10^6	1.000	0.272	125	0.0240	0.0271	W11	
➢ **N1479NC24R ‡**	2400	1436	21000	2.21×10^6	1.000	0.342	125	0.0220	0.0255	W36	
➢ **N1479NC30R ‡**	3000	1436	21000	2.21×10^6	1.000	0.342	125	0.0220	0.0255	W36	
N1479NC240 †	2400	1436	21000	2.21×10^6	1.000	0.342	125	0.0220	0.0255	W11	
N1479NC300 †	3000	1436	21000	2.21×10^6	1.000	0.342	125	0.0220	0.0255	W11	
N1547NC160	1600	1547	23300	2.71×10^6	0.920	0.252	125	0.0240	0.0271	W11	W14 Weight 1300 g
N1547NC200	2000	1547	23300	2.71×10^6	0.920	0.252	125	0.0240	0.0271	W11	
N1581QL160	1600	1535	19100	1.82×10^6	1.022	0.253	125	0.0230	0.0270	WP6	
N1581QL180	1800	1535	19100	1.82×10^6	1.022	0.253	125	0.0230	0.0270	WP6	
N1588NC200 †	2000	1588	22500	2.53×10^6	0.951	0.268	125	0.0220	0.0255	W11	
N1588NC260 †	2600	1588	22500	2.53×10^6	0.951	0.268	125	0.0220	0.0255	W11	
N1651QK200	2000	1651	17300	1.50×10^6	1.060	0.317	125	0.0180	0.0217	WP2	
N1651QK220	2200	1651	17300	1.50×10^6	1.060	0.317	125	0.0180	0.0217	WP2	
N1661VC300	3000	1661	23000	2.65×10^6	1.040	0.350	125	0.0170	0.0200	W12	
N1661VC360	3600	1661	23000	2.65×10^6	1.040	0.350	125	0.0170	0.0200	W12	W15 Weight 2800 g
N1661VF300	3000	1661	23000	2.65×10^6	1.040	0.350	125	0.0170	0.0200	W62	
N1661VF360	3600	1661	23000	2.65×10^6	1.040	0.350	125	0.0170	0.0200	W62	
N1712VC240	2400	1712	24500	3.00×10^6	1.050	0.320	125	0.0170	0.0200	W12	
N1712VC300	3000	1712	24500	3.00×10^6	1.050	0.320	125	0.0170	0.0200	W12	
N1712VF240	2400	1712	24500	3.00×10^6	1.050	0.320	125	0.0170	0.0200	W62	
N1712VF300	3000	1712	24500	3.00×10^6	1.050	0.320	125	0.0170	0.0200	W62	
N1718NC120	1200	1718	27200	3.70×10^6	0.979	0.169	125	0.0240	0.0271	W11	W36 Weight 500 g
N1718NC180	1800	1718	27200	3.70×10^6	0.979	0.169	125	0.0240	0.0271	W11	
N1718NC200	2000	1718	27200	3.70×10^6	0.979	0.169	125	0.0240	0.0271	W11	
N1802NC120	1200	1802	29600	4.38×10^6	0.855	0.171	125	0.0240	0.0271	W11	
N1802NC160	1600	1802	29600	4.38×10^6	0.855	0.171	125	0.0240	0.0271	W11	
N1806QK160	1600	1806	19100	1.82×10^6	1.022	0.253	125	0.0180	0.0217	WP2	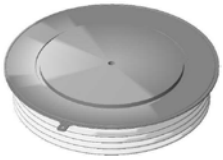
N1806QK180	1800	1806	19100	1.82×10^6	1.022	0.253	125	0.0180	0.0217	WP2	
N1817QL080	800	1760	22000	2.42×10^6	0.955	0.177	125	0.023	0.0272	WP6	
N1817QL160	1600	1760	22000	2.42×10^6	0.955	0.177	125	0.023	0.0272	WP6	
N1817QL180	1800	1760	22000	2.42×10^6	0.955	0.177	125	0.023	0.0272	WP6	W46 Weight 1200 g
N2015ML200	2000	2015	32400	5.25×10^6	0.883	0.210	125	0.0180	0.0201	WP5	* Available with reduced height 25mm, refer to Chippenham Factory
N2015ML220	2200	2015	32400	5.25×10^6	0.883	0.210	125	0.0180	0.0201	WP5	
N2046NC120 †	1200	2046	29200	4.26×10^6	0.980	0.114	125	0.0220	0.0255	W11	
N2046NC160 †	1600	2046	29200	4.26×10^6	0.980	0.114	125	0.0220	0.0255	W11	

Capsule Types

Type Part No. ○ Not for new design ➢ New	V_{DRM} V_{RRM} V	I_{TAV} T_K = 55°C A	I_{TSM} 10 ms ½ sine $V_R \leq 60\%\ V_{RRM}$ A	I^2t A^2s	V_{T0} @T_{JM} V	r_T mΩ	T_{JM} °C	R_{thJC} 180° Sine K/W	R_{thJC} 120° Rect. K/W	Fig. No.	Package style Outlines on pages O-01...O-29
N2083QK080	800	2083	22000	2.42×10^6	0.955	0.177	125	0.0180	0.0217	WP2	
N2083QK120	1200	2083	22000	2.42×10^6	0.955	0.177	125	0.0180	0.0217	WP2	
N2083QK140	1400	2083	22000	2.42×10^6	0.955	0.177	125	0.0180	0.0217	WP2	
N2086NC060	600	2086	35000	6.13×10^6	0.840	0.108	125	0.0240	0.0271	W11	
N2086NC100	1000	2086	35000	6.13×10^6	0.840	0.108	125	0.0240	0.0271	W11	
N2154JK020	200	2154	22700	2.58×10^6	0.890	0.107	140	0.0270	0.0314	WP1	
N2154JK040	400	2154	22700	2.58×10^6	0.890	0.107	140	0.0270	0.0314	WP1	
N2154JK060	600	2154	22700	2.58×10^6	0.890	0.107	140	0.0270	0.0314	WP1	
N2172ZC400	4000	2172	28000	3.92×10^6	1.350	0.294	125	0.0110	0.0120	W13	W48 Weight 2000 g
N2172ZC450	4500	2172	28000	3.92×10^6	1.350	0.294	125	0.0110	0.0120	W13	
N2172ZD400	4000	2172	28000	3.92×10^6	1.350	0.294	125	0.0110	0.0120	W46	
N2172ZD450	4500	2172	28000	3.92×10^6	1.350	0.294	125	0.0110	0.0120	W46	
N2191ML160	1600	2191	34500	5.95×10^6	0.940	0.154	125	0.0180	0.0201	WP5	
N2191ML180	1800	2191	34500	5.95×10^6	0.940	0.154	125	0.0180	0.0201	WP5	
N2293VC180	1800	2293	33800	5.7×10^6	0.956	0.148	125	0.0170	0.0200	W12	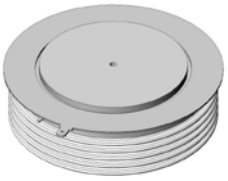
N2293VC220	2200	2293	33800	5.7×10^6	0.956	0.148	125	0.0170	0.0200	W12	
N2293VF180	1800	2293	33800	5.7×10^6	0.956	0.148	125	0.0170	0.0200	W62	
N2293VF220	2200	2293	33800	5.7×10^6	0.956	0.148	125	0.0170	0.0200	W62	
N2367MK200	2000	2367	32400	5.25×10^6	0.883	0.210	125	0.0140	0.0157	WP3	W51 Weight 1700 g
N2367MK220	2200	2367	32400	5.25×10^6	0.883	0.210	125	0.0140	0.0157	WP3	
N2418ZC300	3000	2418	30000	4.50×10^6	1.160	0.246	125	0.0110	0.0120	W13	
N2418ZC360	3600	2418	30000	4.50×10^6	1.160	0.246	125	0.0110	0.0120	W13	
N2418ZD300	3000	2418	30000	4.50×10^6	1.160	0.246	125	0.0110	0.0120	W46	
N2418ZD360	3600	2418	30000	4.50×10^6	1.160	0.246	125	0.0110	0.0120	W46	
N2500VC120	1200	2500	37000	6.85×10^6	0.880	0.124	125	0.0170	0.0200	W12	
N2500VC160	1600	2500	37000	6.85×10^6	0.880	0.124	125	0.0170	0.0200	W12	
N2500VF120	1200	2500	37000	6.85×10^6	0.880	0.124	125	0.0170	0.0200	W62	W57 Weight 326 g
N2500VF160	1600	2500	37000	6.85×10^6	0.880	0.124	125	0.0170	0.0200	W62	
N2520ML080	800	2520	38200	7.30×10^6	0.980	0.090	125	0.0180	0.0201	WP5	
N2520ML120	1200	2520	38200	7.30×10^6	0.980	0.090	125	0.0180	0.0201	WP5	
N2520ML140	1400	2520	38200	7.30×10^6	0.980	0.090	125	0.0180	0.0201	WP5	
N2543ZC240	2400	2543	32000	5.12×10^6	0.780	0.274	125	0.0110	0.0120	W13	
N2543ZC300	3000	2543	32000	5.12×10^6	0.780	0.274	125	0.0110	0.0120	W13	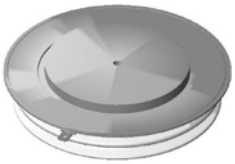
N2543ZD240	2400	2543	32000	5.12×10^6	0.780	0.274	125	0.0110	0.0120	W46	
N2543ZD300	3000	2543	32000	5.12×10^6	0.780	0.274	125	0.0110	0.0120	W46	
N2593MK160	1600	2593	34500	5.95×10^6	0.940	0.154	125	0.0140	0.0157	WP3	W62 Weight 1000 g
N2593MK180	1800	2593	34500	5.95×10^6	0.940	0.154	125	0.0140	0.0157	WP3	
➢ **N2825TE400**	4000	2825	36900	6.81×10^6	1.210	0.270	125	0.008	0.00837	W82	
➢ **N2825TE450**	4500	2825	36900	6.81×10^6	1.210	0.270	125	0.008	0.00837	W82	
➢ **N2825TJ400**	4000	2825	36900	6.81×10^6	1.210	0.270	125	0.008	0.00837	W81	
➢ **N2825TJ450**	4500	2825	36900	6.81×10^6	1.210	0.270	125	0.008	0.00837	W81	
➢ **N2900QL020**	200	2900	28000	3.92×10^6	0.850	0.080	150	0.023	0.0272	WP6	
➢ **N2900QL040**	400	2900	28000	3.92×10^6	0.850	0.080	150	0.023	0.0272	WP6	
➢ **N2900QL060**	600	2900	28000	3.92×10^6	0.850	0.080	150	0.023	0.0272	WP6	W81 Weight 1200 g
N3012ZC200	2000	3012	45100	10.2×10^6	0.920	0.160	125	0.0110	0.0120	W13	
N3012ZC260	2600	3012	45100	10.2×10^6	0.920	0.160	125	0.0110	0.0120	W13	
N3012ZD200	2000	3012	45100	10.2×10^6	0.920	0.160	125	0.0110	0.0120	W46	
N3012ZD260	2600	3012	45100	10.2×10^6	0.920	0.160	125	0.0110	0.0120	W46	

Capsule Types

Type Part No. ○ Not for new design ➢ New	V_{DRM} V_{RRM} V	I_{TAV} T_K = 55°C A	I_{TSM} 10 ms ½ sine $V_R \leq 60\%\ V_{RRM}$ A	I^2t A^2s	V_{T0} @T_{JM} V	r_T mΩ	T_{JM} °C	R_{thJC} 180° Sine K/W	R_{thJC} 120° Rect. K/W	Fig. No.	Package style Outlines on pages O-01...O-29
N3022MK080	800	3022	38200	7.30×10^6	0.981	0.090	125	0.0140	0.0157	WP3	
N3022MK120	1200	3022	38200	7.30×10^6	0.981	0.090	125	0.0140	0.0157	WP3	
N3022MK140	1400	3022	38200	7.30×10^6	0.981	0.090	125	0.0140	0.0157	WP3	
N3029ZC240	2400	3029	38200	7.30×10^6	0.947	0.154	125	0.0110	0.0119	W13	
N3029ZC280	2800	3029	38200	7.30×10^6	0.947	0.154	125	0.0110	0.0119	W13	
N3029ZD240	2400	3029	38200	7.30×10^6	0.947	0.154	125	0.0110	0.0119	W46	
N3029ZD280	2800	3029	38200	7.30×10^6	0.947	0.154	125	0.0110	0.0119	W46	
N3229QK020	200	3229	28000	3.92×10^6	0.926	0.067	140	0.0180	0.0217	WP2	W82 Weight 1650 g
N3229QK040	400	3229	28000	3.92×10^6	0.926	0.067	140	0.0180	0.0217	WP2	
N3229QK060	600	3229	28000	3.92×10^6	0.926	0.067	140	0.0180	0.0217	WP2	
○ **N3493TC360**	3600	3493	46800	10.95×10^6	0.950	0.180	125	0.008	0.012	W14	
○ **N3493TC420**	4200	3493	46800	10.95×10^6	0.950	0.180	125	0.008	0.012	W14	
○ **N3493TD360**	3600	3493	46800	10.95×10^6	0.950	0.180	125	0.008	0.012	W51	
○ **N3493TD420**	4200	3493	46800	10.95×10^6	0.950	0.180	125	0.008	0.012	W51	
N3533ZC180	1800	3533	50000	12.50×10^6	0.970	0.095	125	0.0110	0.0120	W13	
N3533ZC220	2200	3533	50000	12.50×10^6	0.970	0.095	125	0.0110	0.0120	W13	W90 Weight 90 g
N3533ZD180	1800	3533	50000	12.50×10^6	0.970	0.095	125	0.0110	0.0120	W46	
N3533ZD220	2200	3533	50000	12.50×10^6	0.970	0.095	125	0.0110	0.0120	W46	
N3597ML020	200	3597	45400	10.3×10^6	0.840	0.053	140	0.0180	0.0201	WP5	
N3597ML040	400	3597	45400	10.3×10^6	0.840	0.053	140	0.0180	0.0201	WP5	
N3597ML060	600	3597	45400	10.3×10^6	0.840	0.053	140	0.0180	0.0201	WP5	
➢ **N3790TE240**	2400	3790	49500	12.3×10^6	0.900	0.150	125	0.0080	0.00837	W82	W91 Weight 110 g
➢ **N3790TE280**	2800	3790	49500	12.3×10^6	0.900	0.150	125	0.0080	0.00837	W82	
➢ **N3790TJ240**	2400	3790	49500	12.3×10^6	0.900	0.150	125	0.0080	0.00837	W81	
➢ **N3790TJ280**	2800	3790	49500	12.3×10^6	0.900	0.150	125	0.0080	0.00837	W81	
N3839TC300	3000	3839	49500	12.25×10^6	0.950	0.140	125	0.008	0.0120	W14	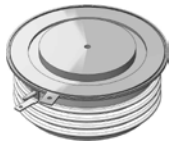
N3839TC350	3500	3839	49500	12.25×10^6	0.950	0.140	125	0.008	0.0120	W14	
N3839TD300	3000	3839	49500	12.25×10^6	0.950	0.140	125	0.008	0.0120	W51	
N3839TD350	3500	3839	49500	12.25×10^6	0.950	0.140	125	0.008	0.0120	W51	
N3880ZD160	1600	3880	59000	17.4×10^6	0.986	0.068	125	0.1100	0.1190	W46	W92 Weight 280 g
N3880ZD180	1800	3880	59000	17.4×10^6	0.986	0.068	125	0.1100	0.1190	W46	
N3904HK200	2000	3904	50900	12.95×10^6	0.920	0.111	125	0.0090	0.0099	WP4	
N3904HK220	2200	3904	50900	12.95×10^6	0.920	0.111	125	0.0090	0.0099	WP4	
N3930ZC120	1200	3930	54000	14.6×10^6	0.841	0.080	125	0.0110	0.0119	W13	
N3930ZC160	1600	3930	54000	14.6×10^6	0.841	0.080	125	0.0110	0.0119	W13	
N3930ZD120	1200	3930	54000	14.6×10^6	0.841	0.080	125	0.0110	0.0119	W46	WP1 Weight 180 g
N3930ZD160	1600	3930	54000	14.6×10^6	0.841	0.080	125	0.0110	0.0119	W46	
N4085ZC080	800	4085	64000	20.5×10^6	0.850	0.070	125	0.0110	0.0120	W13	
N4085ZC120	1200	4085	64000	20.5×10^6	0.850	0.070	125	0.0110	0.0120	W13	
N4085ZD080	800	4085	64000	20.5×10^6	0.850	0.070	125	0.0110	0.0120	W46	
N4085ZD120	1200	4085	64000	20.5×10^6	0.850	0.070	125	0.0110	0.0120	W46	WP2 Weight 200 g
N4151FC360	3600	4151	54000	14.6×10^6	0.850	0.170	125	0.0065	0.0070	W15	
N4151FC420	4200	4151	54000	14.6×10^6	0.850	0.170	125	0.0065	0.0070	W15	
N4151FD360	3600	4151	54000	14.6×10^6	0.850	0.170	125	0.0065	0.0070	W48	
N4151FD420	4200	4151	54000	14.6×10^6	0.850	0.170	125	0.0065	0.0070	W48	
N4316MK020	200	4316	45400	10.3×10^6	0.840	0.053	140	0.0140	0.0157	WP3	
N4316MK040	400	4316	45400	10.3×10^6	0.840	0.053	140	0.0140	0.0157	WP3	WP3 Weight 260 g
N4316MK060	600	4316	45400	10.3×10^6	0.840	0.053	140	0.0140	0.0157	WP3	

Capsule Types

Type Part No. ○ Not for new design ➢ New	V_{DRM} V_{RRM} V	I_{TAV} T_K = 55°C A	I_{TSM} 10 ms ½ sine $V_R \leq 60\%\ V_{RRM}$ A	I^2t A^2s	V_{T0} @T_{JM} V	r_T mΩ	T_{JM} °C	R_{thJC} 180° Sine K/W	R_{thJC} 120° Rect. K/W	Fig. No.	Package style Outlines on pages O-01...O-29
➢ **N4340TE180**	1800	4340	55000	15.1×10^6	0.886	0.105	125	0.008	0.00847	W82	WP4 Weight 550 g
➢ **N4340TE220**	2200	4340	55000	15.1×10^6	0.886	0.105	125	0.008	0.00847	W82	
➢ **N4340TJ180**	1800	4340	55000	15.1×10^6	0.886	0.105	125	0.008	0.00847	W81	
➢ **N4340TJ220**	2200	4340	55000	15.1×10^6	0.886	0.105	125	0.008	0.00847	W81	
N4472HK160	1600	4472	59000	17.40×10^6	0.986	0.068	125	0.0090	0.0099	WP4	
N4472HK180	1800	4472	59000	17.40×10^6	0.986	0.068	125	0.0090	0.0099	WP4	
N4803FC300	3000	4803	60000	18.0×10^6	0.920	0.110	125	0.0065	0.0070	W15	
N4803FC350	3500	4803	60000	18.0×10^6	0.920	0.110	125	0.0065	0.0070	W15	
N4803FD300	3000	4803	60000	18.0×10^6	0.920	0.110	125	0.0065	0.0069	W48	
N4803FD350	3500	4803	60000	18.0×10^6	0.920	0.110	125	0.0065	0.0069	W48	
N5177FC200	2000	5177	67500	22.8×10^6	0.800	0.100	125	0.0065	0.0070	W15	WP5 Weight 500 g
N5177FC280	2800	5177	67500	22.8×10^6	0.800	0.100	125	0.0065	0.0070	W15	
N5177FD200	2000	5177	67500	22.8×10^6	0.800	0.100	125	0.0065	0.0069	W48	
N5177FD280	2800	5177	67500	22.8×10^6	0.800	0.100	125	0.0065	0.0069	W48	
N5946FC180	1800	5946	72000	25.9×10^6	0.855	0.065	125	0.0065	0.0070	W15	
N5946FC220	2200	5946	72000	25.9×10^6	0.855	0.065	125	0.0065	0.0070	W15	
N5946FD180	1800	5946	72000	25.9×10^6	0.855	0.065	125	0.0065	0.0069	W48	
N5946FD220	2200	5946	72000	25.9×10^6	0.855	0.065	125	0.0065	0.0069	W48	
N6012ZD020	200	6012	65000	21.13×10^6	0.853	0.029	140	0.0110	0.0119	W46	WP6 Weight 330 g
N6012ZD040	400	6012	65000	21.13×10^6	0.853	0.029	140	0.0110	0.0119	W46	
N6012ZD060	600	6012	65000	21.13×10^6	0.853	0.029	140	0.0110	0.0119	W46	
N6974HK020	200	6974	65000	21.13×10^6	0.853	0.029	140	0.0090	0.0099	WP4	
N6974HK040	400	6974	65000	21.13×10^6	0.853	0.029	140	0.0090	0.0099	WP4	
N6974HK060	600	6974	65000	21.13×10^6	0.853	0.029	140	0.0090	0.0099	WP4	

‡ - Thyristor for rotating applications - Please consult factory for more details

† - Please consult factory for new 56mm products to be introduced 2013/14

ø - Not for series operation

Medium Voltage Thyristors

Medium voltage applications place additional demands on phase controlled thyristors. To meet these demands we have developed a comprehensive range of thyristors optimised for medium voltage applications. As voltages increase, so do switching losses and turn-off time to a point where they become significant in line frequency applications. Our patented distributed gate architecture ensures excellent switching performance over a wide range of voltage, current and di/dt. Device lifetime is also engineered to achieve an optimum balance between conduction losses, commutation losses and turn-off time to give maximum power handling from line frequency to 400 Hz. This also gives significant benefits when series or parallel connection of devices is required. Medium voltage thyristors are available from 3.2 kV up to 6.5 kV with silicon diameters from 38 mm to 100 mm making them particularly suitable for high power converters such as medium voltage DC drives, medium voltage soft starts and utility applications such as HVDC, static VAr compensators, excitation and transfer switches.

We recognise the importance of reliability in these large, capital intensive applications and as a result we subject these parts to extended levels of both routine and type testing to ensure that your investment gives years of trouble free service.

Capsule Types

Type	V_{DRM}	I_{TAV}	I_{TSM}	I^2t	t_q	Typ. Reverse Recovery Charge			V_{T0}	r_T	T_{JM}	R_{thJK}		Fig. No.
	V_{RRM}	T_K = 55°C	10 ms ½ sine		@	T_{JM}			@T_{JM}			180°	120°	
Part No.			$V_R \leq 60\%\ V_{RRM}$		200 V/µs	Q_{rr}	@I_{TM}	@-di/dt				Sine	Rect.	
➢ New	V	A	A	A^2s	µs	µC	A	A/µs	V	mΩ	°C	K/W	K/W	
K0349LC600 †	6000	349	4800	115 x 10^3	900-1200	3100	1000	10	1.568	2.428	115	0.047	0.049	W10
K0349LC650 †	6500	349	4800	115 x 10^3	900-1200	3100	1000	10	1.568	2.428	115	0.047	0.049	W10
K0349LG600 †	6000	349	4800	115 x 10^3	900-1200	3100	1000	10	1.568	2.428	115	0.047	0.049	W56
K0349LG650 †	6500	349	4800	115 x 10^3	900-1200	3100	1000	10	1.568	2.428	115	0.047	0.049	W56
K0443LC600 †	6000	443	4800	115 x 10^3	900-1200	3100	1000	10	1.568	2.428	115	0.032	0.039	W10
K0443LC650 †	6500	443	4800	115 x 10^3	900-1200	3100	1000	10	1.568	2.428	115	0.032	0.039	W10
K0443LG600 †	6000	443	4800	115 x 10^3	900-1200	3100	1000	10	1.568	2.428	115	0.032	0.039	W56
K0443LG650 †	6500	443	4800	115 x 10^3	900-1200	3100	1000	10	1.568	2.428	115	0.032	0.039	W56
K0566LC440	4400	566	6000	180 x 10^3	700-1000	2200	500	10	1.360	1.790	125	0.032	0.039	W10
K0566LC480	4800	566	6000	180 x 10^3	700-1000	2200	500	10	1.360	1.790	125	0.032	0.039	W10
K0566LC520	5200	566	6000	180 x 10^3	700-1000	2200	500	10	1.360	1.790	125	0.032	0.039	W10
K0566LG440	4400	566	6000	180 x 10^3	700-1000	2200	500	10	1.360	1.790	125	0.032	0.039	W56
K0566LG480	4800	566	6000	180 x 10^3	700-1000	2200	500	10	1.360	1.790	125	0.032	0.039	W56
K0566LG520	5200	566	6000	180 x 10^3	700-1000	2200	500	10	1.360	1.790	125	0.032	0.039	W56
➢ K0620QA600 †	6000	620	7250	263 x 10^3	700-1000	4000	2000	10	1.540	1.450	125	0.030	0.037	W75
➢ K0620QA650 †	6500	620	7250	263 x 10^3	700-1000	4000	2000	10	1.540	1.450	125	0.030	0.037	W75
➢ K0620QE600 †	6000	620	7250	263 x 10^3	700-1000	4000	2000	10	1.540	1.450	125	0.030	0.037	W76
➢ K0620QE650 †	6500	620	7250	263 x 10^3	700-1000	4000	2000	10	1.540	1.450	125	0.030	0.037	W76
K0682LC360	3600	682	6350	202 x 10^3	650-800	2000	1000	10	1.211	1.182	125	0.032	0.039	W10
K0682LC420	4200	682	6350	202 x 10^3	650-800	2000	1000	10	1.211	1.182	125	0.032	0.039	W10
K0682LG360	3600	682	6350	202 x 10^3	650-800	2000	1000	10	1.211	1.182	125	0.032	0.039	W56
K0682LG420	4200	682	6350	202 x 10^3	650-800	2000	1000	10	1.211	1.182	125	0.032	0.039	W56
K0769NC600 †	6000	769	8600	370 x 10^3	900-1200	3100	1000	10	1.566	1.172	115	0.024	0.029	W11
K0769NC650 †	6500	769	8600	370 x 10^3	900-1200	3100	1000	10	1.566	1.172	115	0.024	0.029	W11
K0769NG600 †	6000	769	8600	370 x 10^3	900-1200	3100	1000	10	1.566	1.172	115	0.024	0.029	W57
K0769NG650 †	6500	769	8600	370 x 10^3	900-1200	3100	1000	10	1.566	1.172	115	0.024	0.029	W57
K0885NC450	4500	885	10000	500 x 10^3	700-1100	5300	1000	10	1.270	0.930	125	0.024	0.027	W11
K0885NC480	4800	885	10000	500 x 10^3	700-1100	5300	1000	10	1.270	0.930	125	0.024	0.027	W11
K0885NC520	5200	885	10000	500 x 10^3	700-1100	5300	1000	10	1.270	0.930	125	0.024	0.027	W11
K0885NG450	4500	885	10000	500 x 10^3	700-1100	5300	1000	10	1.270	0.930	125	0.024	0.027	W57
K0885NG480	4800	885	10000	500 x 10^3	700-1100	5300	1000	10	1.270	0.930	125	0.024	0.027	W57
K0885NG520	5200	885	10000	500 x 10^3	700-1100	5300	1000	10	1.270	0.930	125	0.024	0.027	W57
K0890NC360	3600	890	10900	594 x 10^3	350-550	4000	1000	10	1.516	0.800	125	0.024	0.029	W11
K0890NC420	4200	890	10900	594 x 10^3	350-550	4000	1000	10	1.516	0.800	125	0.024	0.029	W11
➢ K1000MA600 †	6000	1000	12500	781 x 10^3	700-1000	6500	2000	10	1.390	0.860	125	0.020	0.022	W77
➢ K1000MA650 †	6500	1000	12500	781 x 10^3	700-1000	6500	2000	10	1.390	0.860	125	0.020	0.022	W77
➢ K1000ME600 †	6000	1000	12500	781 x 10^3	700-1000	6500	2000	10	1.390	0.860	125	0.020	0.022	W78
➢ K1000ME650 †	6500	1000	12500	781 x 10^3	700-1000	6500	2000	10	1.390	0.860	125	0.020	0.022	W78
K1120NC360	3600	1120	13500	911 x 10^3	650-1000	5000	1000	10	1.092	0.546	125	0.024	0.027	W11
K1120NC420	4200	1120	13500	911 x 10^3	650-1000	5000	1000	10	1.092	0.546	125	0.024	0.027	W11
K1120NG360	3600	1120	13500	911 x 10^3	650-1000	5000	1000	10	1.092	0.546	125	0.024	0.027	W57
K1120NG420	4200	1120	13500	911 x 10^3	650-1000	5000	1000	10	1.092	0.546	125	0.024	0.027	W57
K1121NC320	3200	1121	15000	1.13 x 10^6	200-300	2000	1000	10	1.098	0.542	125	0.024	0.029	W11
K1121NC360	3600	1121	15000	1.13 x 10^6	200-300	2000	1000	10	1.098	0.542	125	0.024	0.029	W11
K1197NC300	3000	1197	10650	567 x 10^3	200-300	2700	1000	10	1.335	0.372	125	0.024	0.029	W11
K1197NC320	3200	1197	10650	567 x 10^3	200-300	2700	1000	10	1.335	0.372	125	0.024	0.029	W11
K1351VC600 †	6000	1351	14300	1.02 x 10^6	800-1500	7200	2000	10	1.410	0.600	115	0.013	0.015	W12
K1351VC650 †	6500	1351	14300	1.02 x 10^6	800-1500	7200	2000	10	1.410	0.600	115	0.013	0.015	W12
K1351VF600 †	6000	1351	14300	1.02 x 10^6	800-1500	7200	2000	10	1.410	0.600	115	0.013	0.015	W62
K1351VF650 †	6500	1351	14300	1.02 x 10^6	800-1500	7200	2000	10	1.410	0.600	115	0.013	0.015	W62
K1947ZC400	4000	1947	25000	3.13 x 10^6	600-700	8800	1000	10	1.221	0.425	125	0.011	0.012	W13
K1947ZC450	4500	1947	25000	3.13 x 10^6	600-700	8800	1000	10	1.221	0.425	125	0.011	0.012	W13
K1947ZD400	4000	1947	25000	3.13 x 10^6	600-700	8800	1000	10	1.221	0.425	125	0.011	0.012	W46
K1947ZD450	4500	1947	25000	3.13 x 10^6	600-700	8800	1000	10	1.221	0.425	125	0.011	0.012	W46

Medium Voltage Thyristors

Capsule Types

Type Part No. ➢ New	V_{DRM} V_{RRM} V	I_{TAV} T_K = 55°C A	I_{TSM} 10 ms ½ sine $V_R \leq 60\%\ V_{RRM}$ A	I^2t A^2s	t_q @ 200 V/µs µs	Typ. Reverse Recovery Charge T_{JM} Q_{rr} µC	@ I_{TM} A	@-di/dt A/µs	V_{T0} @ T_{JM} V	r_T mΩ	T_{JM} °C	R_{thJK} 180° Sine K/W	120° Rect. K/W	Fig. No.
K2065VC360	3600	2065	28000	3.92×10^6	400-700	6700	2000	10	1.121	0.291	125	0.013	0.015	W12
K2065VC420	4200	2065	28000	3.92×10^6	400-700	6700	2000	10	1.121	0.291	125	0.013	0.015	W12
K2065VF360	3600	2065	28000	3.92×10^6	400-700	6700	2000	10	1.121	0.291	125	0.013	0.015	W62
K2065VF420	4200	2065	28000	3.92×10^6	400-700	6700	2000	10	1.121	0.291	125	0.013	0.015	W62
K2095ZC360	3600	2095	18200	1.66×10^6	400-500	4550	2000	10	1.502	0.296	125	0.011	0.012	W13
K2095ZC420	4200	2095	18200	1.66×10^6	400-500	4550	2000	10	1.502	0.296	125	0.011	0.012	W13
K2095ZD360	3600	2095	18200	1.66×10^6	400-500	4550	2000	10	1.502	0.296	125	0.011	0.012	W46
K2095ZD420	4200	2095	18200	1.66×10^6	400-500	4550	2000	10	1.502	0.296	125	0.011	0.012	W46
K2359TC600 †	6000	2359	27000	3.65×10^6	1100-1500	11500	2000	10	1.391	0.360	115	0.009	0.009	W14
K2359TC650 †	6500	2359	27000	3.65×10^6	1100-1500	11500	2000	10	1.391	0.360	115	0.009	0.009	W14
K2359TD600 †	6000	2359	27000	3.65×10^6	1100-1500	11500	2000	10	1.391	0.360	115	0.009	0.009	W51
K2359TD650 †	6500	2359	27000	3.65×10^6	1100-1500	11500	2000	10	1.391	0.360	115	0.009	0.009	W51
K2623TC450	4500	2623	27000	3.65×10^6	500-1000	6800	2000	10	1.421	0.295	125	0.008	0.009	W14
K2623TC480	4800	2623	27000	3.65×10^6	500-1000	6800	2000	10	1.421	0.295	125	0.008	0.009	W14
K2623TC520	5200	2623	27000	3.65×10^6	500-1000	6800	2000	10	1.421	0.295	125	0.008	0.009	W14
K2623TD450	4500	2623	27000	3.65×10^6	500-1000	6800	2000	10	1.421	0.295	125	0.008	0.009	W51
K2623TD480	4800	2623	27000	3.65×10^6	500-1000	6800	2000	10	1.421	0.295	125	0.008	0.009	W51
K2623TD520	5200	2623	27000	3.65×10^6	500-1000	6800	2000	10	1.421	0.295	125	0.008	0.009	W51
K2960TC450	4500	2960	32500	5.28×10^6	800-1600	17000	4000	10	1.229	0.212	125	0.009	0.009	W14
K2960TC480	4800	2960	32500	5.28×10^6	800-1600	17000	4000	10	1.229	0.212	125	0.009	0.009	W14
K2960TC520	5200	2960	32500	5.28×10^6	800-1600	17000	4000	10	1.229	0.212	125	0.009	0.009	W14
K2960TD450	4500	2960	32500	5.28×10^6	800-1600	17000	4000	10	1.229	0.212	125	0.009	0.009	W51
K2960TD480	4800	2960	32500	5.28×10^6	800-1600	17000	4000	10	1.229	0.212	125	0.009	0.009	W51
K2960TD520	5200	2960	32500	5.28×10^6	800-1600	17000	4000	10	1.229	0.212	125	0.009	0.009	W51
K2973FC600	6000	2973	35400	6.27×10^6	1100-1500	15000	4000	10	1.581	0.207	115	0.007	0.007	W15
K2973FC650	6500	2973	35400	6.27×10^6	1100-1500	15000	4000	10	1.581	0.207	115	0.007	0.007	W15
K2973FD600	6000	2973	35400	6.27×10^6	1100-1500	15000	4000	10	1.581	0.207	115	0.007	0.007	W48
K2973FD650	6500	2973	35400	6.27×10^6	1100-1500	15000	4000	10	1.581	0.207	115	0.007	0.007	W48
K3207EC450	4500	3207	32500	5.28×10^6	800-1600	17000	4000	10	1.229	0.212	125	0.008	0.008	W55
K3207EC480	4800	3207	32500	5.28×10^6	800-1600	17000	4000	10	1.229	0.212	125	0.008	0.008	W55
K3207EC520	5200	3207	32500	5.28×10^6	800-1600	17000	4000	10	1.229	0.212	125	0.008	0.008	W55
K3362TC360	3600	3362	39500	7.80×10^6	1000-2000	12000	4000	10	1.052	0.168	125	0.009	0.009	W14
K3362TC420	4200	3362	39500	7.80×10^6	1000-2000	12000	4000	10	1.052	0.168	125	0.009	0.009	W14
K3362TD360	3600	3362	39500	7.80×10^6	1000-2000	12000	4000	10	1.052	0.168	125	0.009	0.009	W51
K3362TD420	4200	3362	39500	7.80×10^6	1000-2000	12000	4000	10	1.052	0.168	125	0.009	0.009	W51
K3503FC450	4500	3503	43200	9.33×10^6	900-1800	8000	4000	10	1.375	0.196	125	0.007	0.007	W15
K3503FC480	4800	3503	43200	9.33×10^6	900-1800	8000	4000	10	1.375	0.196	125	0.007	0.007	W15
K3503FC520	5200	3503	43200	9.33×10^6	900-1800	8000	4000	10	1.375	0.196	125	0.007	0.007	W15
K3503FD450	4500	3503	43200	9.33×10^6	900-1800	8000	4000	10	1.375	0.196	125	0.007	0.007	W48
K3503FD480	4800	3503	43200	9.33×10^6	900-1800	8000	4000	10	1.375	0.196	125	0.007	0.007	W48
K3503FD520	5200	3503	43200	9.33×10^6	900-1800	8000	4000	10	1.375	0.196	125	0.007	0.007	W48

† - New 6.5kV alternative alloyed parts in development, please consult factory for more details

Outlines on pages O-01...O-29

W10 Weight 340 g

W12 Weight 1000 g

W13 Weight 1700 g

W11 Weight 510 g

W14 Weight 1300 g

W15 Weight 2800 g

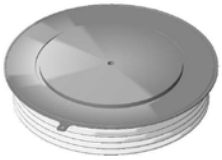

W46 Weight 1200 g

W48 Weight 2000 g

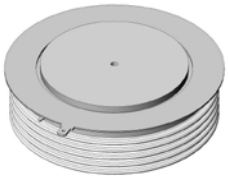

W51 Weight 1700 g

W55 Weight 1800 g

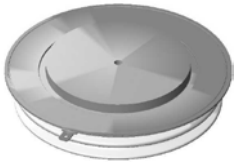

W62 Weight 1000 g

Fast Turn Off Thyristors

IXYS UK Westcode Ltd's "P" series of fast switching thyristors have regenerative gate structure to ensure low switching losses and high di/dt performance. "P" Series devices are suitable for existing inverter, DC chopper drives, UPS and Pulse Power applications. In addition to pressure contact technology these devices offer lower reverse recovery charge values, low forward switching losses and high reliability. These devices are not recommended for new designs.

Stud Types

Type	V_{DRM}	I_{TAV}	I_{TSM}	I^2t	t_q	Typ. Reverse Recovery Charge			V_{T0}	r_T	R_{thJC}	Fig. No.	Package style
	V_{RRM}	T_C = 55°C	10 ms ½ sine $V_R \leq 60\%\ V_{RRM}$		@ 200 V/µs	T_{JM} Q_{rr}	@I_{TM}	@-di/dt	@T_{JM}		180° sine		Outlines on pages O-01...O-29
Part No.	V	A	A	A^2s	µs	µC	A	A/µs	V	mΩ	K/W		
P0128SH10C	1000	128	1700	19 x 10^3	15	50	100	10	1.600	2.490	0.2300	W17	
P0128SH10D	1000	128	1700	19 x 10^3	20	50	100	10	1.600	2.490	0.2300	W17	
P0128SH10E	1000	128	1700	19 x 10^3	25	50	100	10	1.600	2.490	0.2300	W17	
P0128SH12C	1200	128	1700	19 x 10^3	15	50	100	10	1.600	2.490	0.2300	W17	
P0128SH12D	1200	128	1700	19 x 10^3	20	50	100	10	1.600	2.490	0.2300	W17	
P0128SH12E	1200	128	1700	19 x 10^3	25	50	100	10	1.600	2.490	0.2300	W17	
P0128SJ10C	1000	128	1700	19 x 10^3	15	50	100	10	1.600	2.490	0.2300	W16	
P0128SJ10D	1000	128	1700	19 x 10^3	20	50	100	10	1.600	2.490	0.2300	W16	
P0128SJ10E	1000	128	1700	19 x 10^3	25	50	100	10	1.600	2.490	0.2300	W16	
P0128SJ12C	1200	128	1700	19 x 10^3	15	50	100	10	1.600	2.490	0.2300	W16	
P0128SJ12D	1200	128	1700	19 x 10^3	20	50	100	10	1.600	2.490	0.2300	W16	
P0128SJ12E	1200	128	1700	19 x 10^3	25	50	100	10	1.600	2.490	0.2300	W16	
P0248SC12D	1200	248	2700	36.5 x 10^3	20	45	300	20	1.600	1.230	0.1200	W18	
P0248SC12E	1200	248	2700	36.5 x 10^3	25	45	300	20	1.600	1.230	0.1200	W18	
P0273SC12D	1200	273	3250	52.8 x 10^3	20	80	300	20	1.550	0.870	0.1200	W18	
P0273SC12E	1200	273	3250	52.8 x 10^3	25	80	300	20	1.550	0.870	0.1200	W18	
P0273SC12F	1200	273	3250	52.8 x 10^3	30	80	300	20	1.550	0.870	0.1200	W18	
P0306SC08A	800	306	4700	110 x 10^3	10	50	300	20	1.400	0.670	0.1200	W18	
P0306SC08B	800	306	4700	110 x 10^3	12	50	300	20	1.400	0.670	0.1200	W18	
P0306SC08C	800	306	4700	110 x 10^3	15	50	300	20	1.400	0.670	0.1200	W18	
P0311SC12E	1200	311	3600	64.8 x 10^3	25	55	300	20	1.170	0.920	0.1200	W18	
P0311SC12F	1200	311	3600	64.8 x 10^3	30	55	300	20	1.170	0.920	0.1200	W18	
P0330SC04A	400	330	5000	125 x 10^3	10	55	300	20	1.050	0.880	0.1200	W18	
P0330SC04C	400	330	5000	125 x 10^3	15	55	300	20	1.050	0.880	0.1200	W18	
P0330SC06A	600	330	5000	125 x 10^3	10	55	300	20	1.050	0.880	0.1200	W18	
P0330SC06C	600	330	5000	125 x 10^3	20	55	300	20	1.050	0.880	0.1200	W18	
P0330SC08A	800	330	5000	125 x 10^3	10	55	300	20	1.050	0.880	0.1200	W18	
P0330SC08C	800	330	5000	125 x 10^3	15	55	300	20	1.050	0.880	0.1200	W18	
P0431SC04B	400	431	6500	211 x 10^3	12	190	300	20	0.950	0.377	0.1200	W18	
P0431SC04C	400	431	6500	211 x 10^3	15	190	300	20	0.950	0.377	0.1200	W18	
P0431SC06B	600	431	6500	211 x 10^3	12	190	300	20	0.950	0.377	0.1200	W18	
P0431SC06C	600	431	6500	211 x 10^3	15	190	300	20	0.950	0.377	0.1200	W18	

T_{JM} = 125°C

W16 Weight 100 g

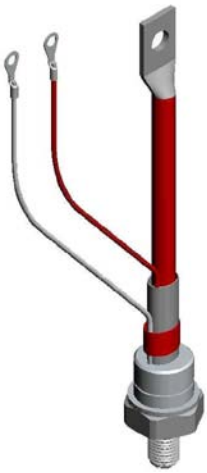

W17 Weight 130 g

W18 Weight 280 g

Fast Turn Off Thyristors

Capsule Types

Type	V_{DRM}	I_{TAV}	I_{TSM}	I^2t	t_q	Typ. Reverse Recovery Charge			V_{T0}	r_T	R_{thJC}	Fig. No.	Package style
	V_{RRM}	T_C = 55°C	10 ms ½ sine $V_R \leq 60\%\ V_{RRM}$		@ 200 V/µs	T_{JM} Q_{rr}	@I_{TM}	@-di/dt	@ T_{JM}		180° sine		Outlines on pages O-01...O-29
Part No.	V	A	A	A^2s	µs	µC	A	A/µs	V	mΩ	K/W		
P0295WC12D	1200	295	2700	36.5 x 10^3	20	50	300	20	1.600	1.230	0.0950	W8	
P0295WC12E	1200	295	2700	36.5 x 10^3	25	50	300	20	1.600	1.230	0.0950	W8	
P0327WC08C	800	327	3250	63.9 x 10^3	20	45	300	20	1.550	0.870	0.0950	W8	
P0327WC08D	800	327	3250	63.9 x 10^3	20	45	300	20	1.550	0.870	0.0950	W8	
P0327WC08E	800	327	3250	63.9 x 10^3	25	45	300	20	1.550	0.870	0.0950	W8	
P0327WC08F	800	327	3250	63.9 x 10^3	30	45	300	20	1.550	0.870	0.0950	W8	
P0327WC12C	1200	327	3250	63.9 x 10^3	20	45	300	20	1.550	0.870	0.0950	W8	
P0327WC12D	1200	327	3250	63.9 x 10^3	20	45	300	20	1.550	0.870	0.0950	W8	
P0327WC12E	1200	327	3250	63.9 x 10^3	25	45	300	20	1.550	0.870	0.0950	W8	
P0327WC12F	1200	327	3250	63.9 x 10^3	30	45	300	20	1.550	0.870	0.0950	W8	W8 Weight 70 g
P0366WC04A	400	366	4700	110 x 10^3	10	25	300	20	1.400	0.670	0.0950	W8	
P0366WC04B	400	366	4700	110 x 10^3	12	25	300	20	1.400	0.670	0.0950	W8	
P0366WC04C	400	366	4700	110 x 10^3	15	25	300	20	1.400	0.670	0.0950	W8	
P0366WC06A	600	366	4700	110 x 10^3	10	25	300	20	1.400	0.670	0.0950	W8	
P0366WC06B	600	366	4700	110 x 10^3	12	25	300	20	1.400	0.670	0.0950	W8	
P0366WC06C	600	366	4700	110 x 10^3	15	25	300	20	1.400	0.670	0.0950	W8	
P0366WC08A	800	366	4700	110 x 10^3	10	25	300	20	1.400	0.670	0.0950	W8	
P0366WC08B	800	366	4700	110 x 10^3	12	25	300	20	1.400	0.670	0.0950	W8	
P0366WC08C	800	366	4700	110 x 10^3	15	25	300	20	1.400	0.670	0.0950	W8	
P0367WC12E	1200	367	3600	64.8 x 10^3	25	50	300	20	1.170	0.920	0.0950	W8	
P0367WC12F	1200	367	3600	64.8 x 10^3	30	50	300	20	1.170	0.920	0.0950	W8	
P0389WC04B	400	389	5000	125 x 10^3	12	30	300	20	1.050	0.880	0.0950	W8	
P0389WC04C	400	389	5000	125 x 10^3	15	30	300	20	1.050	0.880	0.0950	W8	W9 Weight 90 g
P0389WC08B	800	389	5000	125 x 10^3	12	30	300	20	1.050	0.880	0.0950	W8	
P0389WC08C	800	389	5000	125 x 10^3	15	30	300	20	1.050	0.880	0.0950	W8	
P0515WC04B	400	515	6500	211 x 10^3	15	180	300	20	0.950	0.377	0.0950	W8	
P0515WC04C	400	515	6500	211 x 10^3	15	180	300	20	0.950	0.377	0.0950	W8	
P0515WC04D	400	515	6500	211 x 10^3	20	180	300	20	0.950	0.377	0.0950	W8	
P0515WC06B	600	515	6500	211 x 10^3	15	180	300	20	0.950	0.377	0.0950	W8	
P0515WC06C	600	515	6500	211 x 10^3	15	180	300	20	0.950	0.377	0.0950	W8	
P0515WC06D	600	515	6500	211 x 10^3	20	180	300	20	0.950	0.377	0.0950	W8	
P0838LC06B	600	839	12300	750 x 10^3	12	160	800	50	1.200	0.280	0.0470	W10	
P0838LC06C	600	836	12300	750 x 10^3	15	160	800	50	1.200	0.280	0.0470	W10	
P0848YS04B	400	848	8750	383 x 10^3	12	200	550	40	1.010	0.305	0.0500	W9	
P0848YS04C	400	848	8750	383 x 10^3	15	200	550	40	1.010	0.305	0.0500	W9	
P0848YS06B	600	848	8750	383 x 10^3	12	200	550	40	1.010	0.305	0.0500	W9	
P0848YS06C	600	848	8750	383 x 10^3	15	200	550	40	1.010	0.305	0.0500	W9	
P1007LC08D	800	1007	9500	451 x 103	20	400	800	50	1.509	0.265	0.0320	W10	W10 Weight 340 g
P1007LC08E	800	1007	9500	451 x 103	25	400	800	50	1.509	0.265	0.0320	W10	
P1007LC08F	800	1007	9500	451 x 103	30	400	800	50	1.509	0.265	0.0320	W10	
P1007LC12D	1200	1007	9500	451 x 103	20	400	800	50	1.509	0.265	0.0320	W10	
P1007LC12E	1200	1007	9500	451 x 103	25	400	800	50	1.509	0.265	0.0320	W10	
P1007LC12F	1200	1007	9500	451 x 103	30	400	800	50	1.509	0.265	0.0320	W10	

T_{JM} = 125°C

Distributed Gate Thyristors

IXYS UK Westcode Ltd is recognised as the Worldwide leader in distributed gate technology. These devices are available with blocking voltages to 4.5kV and average current to 4kA, with tq from 10 to 300µs. The unique distributed gate design and lifetime control features give these devices both high di/dt capability and fast, low recovery turn-off, while maintaining a low on-state voltage drop. Ideally suited to application including: induction power supplies, high frequency inverters/converters, UPS and pulse power.

Capsule Types

Type Part No. ➢ New	V_{DRM} V	V_{RRM} V	I_{TAV} T_K = 55°C A	I_{TSM} 10 ms ½ sine $V_R \leq 60\%\ V_{RRM}$ A	I^2t A^2s	t_q @ 200 V/µs µs	Typ. Reverse Recovery Charge Q_{rr} µC	@T_{JM} @I_{TM} A	@-di/dt A/µs	V_{T0} @T_{JM} V	r_T mΩ	R_{thJK} 180° Sine K/W	Fig. No.	Package style Outlines on pages O-01...O-29
R0472YS12E	1200	1200	472	4300	92.5 x 10³	25	155	550	40	1.648	1.125	0.050	W9	
R0472YS12F	1200	1200	472	4300	92.5 x 10³	30	155	550	40	1.648	1.125	0.050	W9	
R0472YS16E	1600	1600	472	4300	92.5 x 10³	25	155	550	40	1.648	1.125	0.050	W9	
R0472YS16F	1600	1600	472	4300	92.5 x 10³	30	155	550	40	1.648	1.125	0.050	W9	
R0487YS12D	1200	1200	487	4300	92.5 x 10³	20	90	550	40	1.738	0.943	0.0500	W9	
R0487YS12E	1200	1200	487	4300	92.5 x 10³	25	90	550	40	1.738	0.943	0.0500	W9	
R0487YS14D	1400	1400	487	4300	92.5 x 10³	20	90	550	40	1.738	0.943	0.0500	W9	
R0487YS14E	1400	1400	487	4300	92.5 x 10³	25	90	550	40	1.738	0.943	0.0500	W9	
R0577YS12C	1200	1200	577	6000	180 x 10³	15	150	550	40	1.510	0.640	0.0500	W9	W9 Weight 90 g
R0577YS12D	1200	1200	577	6000	180 x 10³	20	150	550	40	1.510	0.640	0.0500	W9	
R0577YS12E	1200	1200	577	6000	180 x 10³	25	150	550	40	1.510	0.640	0.0500	W9	
R0633YS12D	1200	1200	633	6300	200 x 10³	20	125	550	40	1.250	0.614	0.0500	W9	
R0633YS12E	1200	1200	633	6300	200 x 10³	25	125	550	40	1.250	0.614	0.0500	W9	
R0633YS12F	1200	1200	633	6300	200 x 10³	30	125	550	40	1.250	0.614	0.0500	W9	
R0717LC14G	1400	1400	717	7050	248.5 x 10³	35	425	1000	60	1.752	0.732	0.0320	W10	
➢ R0717LC18G	1800	1800	717	7050	248.5 x 10³	35	425	1000	60	1.752	0.732	0.0320	W10	
R0736LC20J	2000	2000	736	6800	231 x 10³	50	640	1000	60	1.842	0.619	0.0320	W10	
R0736LC20K	2000	2000	736	6800	231 x 10³	60	640	1000	60	1.842	0.619	0.0320	W10	
R0736LC22J	2200	2200	736	6800	231 x 10³	50	640	1000	60	1.842	0.619	0.0320	W10	
R0736LC22K	2200	2200	736	6800	231 x 10³	60	640	1000	60	1.842	0.619	0.0320	W10	
R0736LC25J	2500	2500	736	6800	231 x 10³	50	640	1000	60	1.842	0.619	0.0320	W10	
R0736LC25K	2500	2500	736	6800	231 x 10³	60	640	1000	60	1.842	0.619	0.0320	W10	
R0736LC25L	2500	2500	736	6800	231 x 10³	65	640	1000	60	1.842	0.619	0.0320	W10	
R0736LC25M	2500	2500	736	6800	231 x 10³	70	640	1000	60	1.842	0.619	0.0320	W10	
R0809LC10A	1000	1000	809	8000	320 x 10³	10	120	1000	60	2.100	0.300	0.0320	W10	
R0809LC10B	1000	1000	809	8000	320 x 10³	12	120	1000	60	2.100	0.300	0.0320	W10	
R0830LC12C	1200	1200	830	8500	361 x 10³	15	285	1000	60	1.900	0.357	0.0320	W10	W10 Weight 340 g
R0830LC12D	1200	1200	830	8500	361 x 10³	20	285	1000	60	1.900	0.357	0.0320	W10	
R0830LC12E	1200	1200	830	8500	361 x 10³	25	285	1000	60	1.900	0.357	0.0320	W10	
R0830LC12F	1200	1200	830	8500	361 x 10³	30	285	1000	60	1.900	0.357	0.0320	W10	
R0830LC14C	1400	1400	830	8500	361 x 10³	15	285	1000	60	1.900	0.357	0.0320	W10	
R0830LC14D	1400	1400	830	8500	361 x 10³	20	285	1000	60	1.900	0.357	0.0320	W10	
R0830LC14E	1400	1400	830	8500	361 x 10³	25	285	1000	60	1.900	0.357	0.0320	W10	
R0830LC14F	1400	1400	830	8500	361 x 10³	30	285	1000	60	1.900	0.357	0.0320	W10	
R0878LC18K	1800	1800	878	7500	281 x 10³	60	720	1000	60	1.447	0.480	0.0320	W10	
R0878LC18L	1800	1800	878	7500	281 x 10³	65	720	1000	60	1.447	0.480	0.0320	W10	
R0878LC18M	1800	1800	878	7500	281 x 10³	70	720	1000	60	1.447	0.480	0.0320	W10	
R0878LC20K	2000	1800	878	7500	281 x 10³	60	720	1000	60	1.447	0.480	0.0320	W10	
R0878LC20L	2000	1800	878	7500	281 x 10³	65	720	1000	60	1.447	0.480	0.0320	W10	
R0878LC20M	2000	1800	878	7500	281 x 10³	70	720	1000	60	1.447	0.480	0.0320	W10	
R0878LC21K	2100	1800	878	7500	281 x 10³	60	720	1000	60	1.447	0.480	0.0320	W10	
R0878LC21L	2100	1800	878	7500	281 x 10³	65	720	1000	60	1.447	0.480	0.0320	W10	
R0878LC21M	2100	1800	878	7500	281 x 10³	70	720	1000	60	1.447	0.480	0.0320	W10	
R0929LC10A	1000	1000	929	9000	405 x 10³	10	150	1000	60	1.549	0.350	0.0320	W10	
R0929LC10B	1000	1000	929	9000	405 x 10³	12	150	1000	60	1.549	0.350	0.0320	W10	
R0929LC10C	1000	1000	929	9000	405 x 10³	15	150	1000	60	1.549	0.350	0.0320	W10	
R0929LC12A	1200	1200	929	9000	405 x 10³	10	150	1000	60	1.549	0.350	0.0320	W10	
R0929LC12B	1200	1200	929	9000	405 x 10³	12	150	1000	60	1.549	0.350	0.0320	W10	W11 Weight 510 g
R0929LC12C	1200	1200	929	9000	405 x 10³	15	150	1000	60	1.549	0.350	0.0320	W10	
R0929LC12D	1200	1200	929	9000	405 x 10³	20	150	1000	60	1.549	0.350	0.0320	W10	
R0929LC12E	1200	1200	929	9000	405 x 10³	25	150	1000	60	1.549	0.350	0.0320	W10	
R0964LC10C	1000	1000	964	9400	442 x 10³	15	170	1000	60	1.530	0.309	0.0320	W10	
R0964LC10D	1000	1000	964	9400	442 x 10³	20	170	1000	60	1.530	0.309	0.0320	W10	
R0964LC10E	1000	1000	964	9400	442 x 10³	25	170	1000	60	1.530	0.309	0.0320	W10	
R0964LC12C	1200	1200	964	9400	442 x 10³	15	170	1000	60	1.530	0.309	0.0320	W10	

Distributed Gate Thyristors

Capsule Types

Type Part No. ➢ New	V_{DRM} V	V_{RRM} V	I_{TAV} T_K = 55°C A	I_{TSM} 10 ms ½ sine $V_R \leq 60\%\ V_{RRM}$ A	I^2t A^2s	t_q @ 200 V/µs µs	Typ. Reverse Recovery Charge Q_{rr} µC	T_{JM} @I_{TM} A	@-di/dt A/µs	V_{T0} @T_{JM} = 125°C V	r_T mΩ	R_{thJK} 180° Sine K/W	Fig. No.	Package style Outlines on pages O-01...O-29
R0964LC12D	1200	1200	964	9400	442 x 10^3	20	170	1000	60	1.530	0.309	0.0320	W10	
R0964LC12E	1200	1200	964	9400	442 x 10^3	25	170	1000	60	1.530	0.309	0.0320	W10	
R0990LC08A	800	800	990	11000	605 x 10^3	10	90	1000	60	1.350	0.350	0.0320	W10	
R0990LC08B	800	800	990	11000	605 x 10^3	12	90	1000	60	1.350	0.350	0.0320	W10	
R0990LC08C	800	800	990	11000	605 x 10^3	15	90	1000	60	1.350	0.350	0.0320	W10	
R1124NC18J	1800	1800	1124	13500	0.91 x 106	50	640	1000	60	1.540	0.379	0.0240	W11	
R1124NC18K	1800	1800	1124	13500	0.91 x 106	60	640	1000	60	1.540	0.379	0.0240	W11	
R1124NC18L	1800	1800	1124	13500	0.91 x 106	65	640	1000	60	1.540	0.379	0.0240	W11	
R1124NC18M	1800	1800	1124	13500	0.91 x 106	70	640	1000	60	1.540	0.379	0.0240	W11	
R1124NC20J	2000	1800	1124	13500	0.91 x 106	50	640	1000	60	1.540	0.379	0.0240	W11	
R1124NC20K	2000	1800	1124	13500	0.91 x 106	60	640	1000	60	1.540	0.379	0.0240	W11	
R1124NC20L	2000	1800	1124	13500	0.91 x 106	65	640	1000	60	1.540	0.379	0.0240	W11	
R1124NC20M	2000	1800	1124	13500	0.91 x 106	70	640	1000	60	1.540	0.379	0.0240	W11	
R1124NC21J	2100	1800	1124	13500	0.91 x 106	50	640	1000	60	1.540	0.379	0.0240	W11	
R1124NC21K	2100	1800	1124	13500	0.91 x 106	60	640	1000	60	1.540	0.379	0.0240	W11	
R1124NC21L	2100	1800	1124	13500	0.91 x 106	65	640	1000	60	1.540	0.379	0.0240	W11	
R1124NC21M	2100	1800	1124	13500	0.91 x 106	70	640	1000	60	1.540	0.379	0.0240	W11	
R1127NC32P	3200	3200	1127	12800	819 x 10^3	120	3500	1000	60	1.500	0.474	0.0220	W11	
R1127NC32R	3200	3200	1127	12800	819 x 10^3	140	3500	1000	60	1.500	0.474	0.0220	W11	W13 Weight 1700 g
R1127NC32S	3200	3200	1127	12800	819 x 10^3	160	3500	1000	60	1.500	0.474	0.0220	W11	
R1127NC32T	3200	3200	1127	12800	819 x 10^3	200	3500	1000	60	1.500	0.474	0.0220	W11	
R1127NC34R	3400	3400	1127	12800	819 x 10^3	140	3500	1000	60	1.500	0.474	0.0220	W11	
R1127NC34S	3400	3400	1127	12800	819 x 10^3	160	3500	1000	60	1.500	0.474	0.0220	W11	
R1127NC34T	3400	3400	1127	12800	819 x 10^3	200	3500	1000	60	1.500	0.474	0.0220	W11	
R1127NC36R	3600	3600	1127	12800	819 x 10^3	140	3500	1000	60	1.500	0.474	0.0220	W11	
R1127NC36S	3600	3600	1127	12800	819 x 10^3	160	3500	1000	60	1.500	0.474	0.0220	W11	
R1127NC36T	3600	3600	1127	12800	819 x 10^3	200	3500	1000	60	1.500	0.474	0.0220	W11	
R1158NC26N	2600	2600	1158	14500	1.05 x 10^6	100	1600	1000	60	1.600	0.400	0.0220	W11	
R1158NC26P	2600	2600	1158	14500	1.05 x 10^6	120	1600	1000	60	1.600	0.400	0.0220	W11	
R1158NC26T	2600	2600	1158	14500	1.05 x 10^6	200	1600	1000	60	1.600	0.400	0.0220	W11	
R1178NC14E	1400	1400	1178	17000	1.45 x 10^6	25	320	1000	60	1.600	0.300	0.0240	W11	
R1178NC14F	1400	1400	1178	17000	1.45 x 10^6	30	320	1000	60	1.600	0.300	0.0240	W11	
R1178NC14G	1400	1400	1178	17000	1.45 x 10^6	35	320	1000	60	1.600	0.300	0.0240	W11	
R1211NC12C	1200	1200	1211	17600	1.548 x 10^6	15	230	1000	60	1.720	0.230	0.0240	W11	
R1211NC12D	1200	1200	1211	17600	1.548 x 10^6	20	230	1000	60	1.720	0.230	0.0240	W11	
R1211NC12E	1200	1200	1211	17600	1.548 x 10^6	25	230	1000	60	1.720	0.230	0.0240	W11	
R1271NC12B	1200	1200	1271	18000	1.62 x 10^6	12	200	1000	60	1.547	0.237	0.0240	W11	
R1271NC12C	1200	1200	1271	18000	1.62 x 10^6	15	200	1000	60	1.547	0.237	0.0240	W11	
R1271NC12D	1200	1200	1271	18000	1.62 x 10^6	20	200	1000	60	1.547	0.237	0.0240	W11	
R1271NC12E	1200	1200	1271	18000	1.62 x 10^6	25	200	1000	60	1.547	0.237	0.0240	W11	
R1275NC18J	1800	1800	1275	15500	1.20 x 10^6	50	940	1000	60	1.207	0.342	0.0240	W11	
R1275NC18K	1800	1800	1275	15500	1.20 x 10^6	60	940	1000	60	1.207	0.342	0.0240	W11	W14 Weight 1300 g
R1275NC18L	1800	1800	1275	15500	1.20 x 10^6	65	940	1000	60	1.207	0.342	0.0240	W11	
R1275NC18M	1800	1800	1275	15500	1.20 x 10^6	70	940	1000	60	1.207	0.342	0.0240	W11	
R1275NC20J	2000	1800	1275	15500	1.20 x 10^6	50	940	1000	60	1.207	0.342	0.0240	W11	
R1275NC20K	2000	1800	1275	15500	1.20 x 10^6	60	940	1000	60	1.207	0.342	0.0240	W11	
R1275NC20L	2000	1800	1275	15500	1.20 x 10^6	65	940	1000	60	1.207	0.342	0.0240	W11	
R1275NC20M	2000	1800	1275	15500	1.20 x 10^6	70	940	1000	60	1.207	0.342	0.0240	W11	
R1275NC21J	2100	1800	1275	15500	1.20 x 10^6	50	940	1000	60	1.207	0.342	0.0240	W11	
R1275NC21K	2100	1800	1275	15500	1.20 x 10^6	60	940	1000	60	1.207	0.342	0.0240	W11	
R1275NC21L	2100	1800	1275	15500	1.20 x 10^6	65	940	1000	60	1.207	0.342	0.0240	W11	
R1275NC21M	2100	1800	1275	15500	1.20 x 10^6	70	940	1000	60	1.207	0.342	0.0240	W11	
R1279NC22J	2200	2200	1279	14800	1.10 x 10^6	50	1250	1000	60	1.440	0.330	0.0220	W11	
R1279NC22K	2200	2200	1279	14800	1.10 x 10^6	60	1250	1000	60	1.440	0.330	0.0220	W11	
R1279NC22L	2200	2200	1279	14800	1.10 x 10^6	65	1250	1000	60	1.440	0.330	0.0220	W11	
R1279NC22M	2200	2200	1279	14800	1.10 x 10^6	70	1250	1000	60	1.440	0.330	0.0220	W11	
R1279NC25J	2500	2500	1279	14800	1.10 x 10^6	50	1250	1000	60	1.440	0.330	0.0220	W11	
R1279NC25K	2500	2500	1279	14800	1.10 x 10^6	60	1250	1000	60	1.440	0.330	0.0220	W11	

Distributed Gate Thyristors

Capsule Types

Type Part No. ➢ New	V_{DRM} V	V_{RRM} V	I_{TAV} T_K = 55°C A	I_{TSM} 10 ms ½ sine $V_R \leq 60\%\ V_{RRM}$ A	I^2t A^2s	t_q @ 200 V/µs µs	Typ. Reverse Recovery Charge T_{JM} Q_{rr} µC	@I_{TM} A	@-di/dt A/µs	V_{T0} @T_{JM} = 125°C V	r_T mΩ	R_{thJK} 180° Sine K/W	Fig. No.	Package style Outlines on pages O-01...O-29
R1279NC25L	2500	2500	1279	14800	1.10×10^6	65	1250	1000	60	1.440	0.330	0.0220	W11	
R1279NC25M	2500	2500	1279	14800	1.10×10^6	70	1250	1000	60	1.440	0.330	0.0220	W11	
R1280NC21J	2100	2100	1280	14800	1.10×10^6	50	1200	1000	60	1.440	0.330	0.0220	W11	
R1280NC21K	2100	2100	1280	14800	1.10×10^6	60	1200	1000	60	1.440	0.330	0.0220	W11	
R1280NC21L	2100	2100	1280	14800	1.10×10^6	65	1200	1000	60	1.440	0.330	0.0220	W11	
R1280NC21M	2100	2100	1280	14800	1.10×10^6	70	1200	1000	60	1.440	0.330	0.0220	W11	
R1280NC22J	2200	2100	1280	14800	1.10×10^6	50	1200	1000	60	1.440	0.330	0.0220	W11	
R1280NC22K	2200	2100	1280	14800	1.10×10^6	60	1200	1000	60	1.440	0.330	0.0220	W11	
R1280NC22L	2200	2100	1280	14800	1.10×10^6	65	1200	1000	60	1.440	0.330	0.0220	W11	
R1280NC22M	2200	2100	1280	14800	1.10×10^6	70	1200	1000	60	1.440	0.330	0.0220	W11	
R1280NC25J	2500	2100	1280	14800	1.10×10^6	50	1200	1000	60	1.440	0.330	0.0220	W11	
R1280NC25K	2500	2100	1280	14800	1.10×10^6	60	1200	1000	60	1.440	0.330	0.0220	W11	
R1280NC25L	2500	2100	1280	14800	1.10×10^6	65	1200	1000	60	1.440	0.330	0.0220	W11	
R1280NC25M	2500	2100	1280	14800	1.10×10^6	70	1200	1000	60	1.440	0.330	0.0220	W11	
R1331NC10B	1000	1000	1331	18200	1.66×10^6	12	200	1000	60	1.450	0.285	0.0220	W11	W15 Weight 2800 g
R1331NC10C	1000	1000	1331	18200	1.66×10^6	15	200	1000	60	1.450	0.285	0.0220	W11	
R1331NC10D	1000	1000	1331	18200	1.66×10^6	20	200	1000	60	1.450	0.285	0.0220	W11	
R1331NC12B	1200	1200	1331	18200	1.66×10^6	12	200	1000	60	1.450	0.285	0.0220	W11	
R1331NC12C	1200	1200	1331	18200	1.66×10^6	15	200	1000	60	1.450	0.285	0.0220	W11	
R1331NC12D	1200	1200	1331	18200	1.66×10^6	20	200	1000	60	1.450	0.285	0.0220	W11	
R1446NC12C	1200	1200	1446	19500	1.90×10^6	15	300	1000	60	1.304	0.199	0.0240	W11	
R1446NC12E	1200	1200	1446	19500	1.90×10^6	20	300	1000	60	1.304	0.199	0.0240	W11	
R1446NC12F	1200	1200	1446	19500	1.90×10^6	30	300	1000	60	1.304	0.199	0.0240	W11	
R1446NC12G	1200	1200	1446	19500	1.90×10^6	35	300	1000	60	1.304	0.199	0.0240	W11	
R1448NC14H	1400	2000	1448	15500	1.20×10^6	40	950	1000	60	1.300	0.250	0.0220	W11	
R1448NC14J	1400	2000	1448	15500	1.20×10^6	50	950	1000	60	1.300	0.250	0.0220	W11	
R1448NC18H	1800	2000	1448	15500	1.20×10^6	40	950	1000	60	1.300	0.250	0.0220	W11	
R1448NC18J	1800	2000	1448	15500	1.20×10^6	50	950	1000	60	1.300	0.250	0.0220	W11	
R1448NC20H	2000	2000	1448	15500	1.20×10^6	40	950	1000	60	1.300	0.250	0.0220	W11	
R1448NC20J	2000	2000	1448	15500	1.20×10^6	50	950	1000	60	1.300	0.250	0.0220	W11	
R1448NC20K	2000	2000	1448	15500	1.20×10^6	60	950	1000	60	1.300	0.250	0.0220	W11	
R1448NC20L	2000	2000	1448	15500	1.20×10^6	65	950	1000	60	1.300	0.250	0.0220	W11	
R1448NC20M	2000	2000	1448	15500	1.20×10^6	70	950	1000	60	1.300	0.250	0.0220	W11	
R1700MC18E	1800	1800	1700	20000	2.0×10^6	25	1400	1000	60	1.600	0.250	0.0150	W70	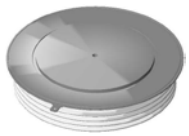
R1700MC18F	1800	1800	1700	20000	2.0×10^6	30	1400	1000	60	1.600	0.250	0.0150	W70	
R1700MC18G	1800	1800	1700	20000	2.0×10^6	35	1400	1000	60	1.600	0.250	0.0150	W70	
R1700MC18H	1800	1800	1700	20000	2.0×10^6	40	1400	1000	60	1.600	0.250	0.0150	W70	
R1700MC18J	1800	1800	1700	20000	2.0×10^6	50	1400	1000	60	1.600	0.250	0.0150	W70	W46 Weight 1200 g
R1700MC21E	2100	1800	1700	20000	2.0×10^6	25	1400	1000	60	1.600	0.250	0.0150	W70	
R1700MC21F	2100	1800	1700	20000	2.0×10^6	30	1400	1000	60	1.600	0.250	0.0150	W70	
R1700MC21G	2100	1800	1700	20000	2.0×10^6	35	1400	1000	60	1.600	0.250	0.0150	W70	
R1700MC21H	2100	1800	1700	20000	2.0×10^6	40	1400	1000	60	1.600	0.250	0.0150	W70	
R1700MC21J	2100	1800	1700	20000	2.0×10^6	50	1400	1000	60	1.600	0.250	0.0150	W70	
R2475ZC28M	2800	2800	2475	31000	4.81×10^6	70	3900	4000	60	1.504	0.174	0.0110	W13	
R2475ZC28N	2800	2800	2475	31000	4.81×10^6	100	3900	4000	60	1.504	0.174	0.0110	W13	
R2475ZC28R	2800	2800	2475	31000	4.81×10^6	140	3900	4000	60	1.504	0.174	0.0110	W13	
R2475ZD28M	2800	2800	2475	31000	4.81×10^6	70	3900	4000	60	1.504	0.174	0.0110	W46	
R2475ZD28N	2800	2800	2475	31000	4.81×10^6	100	3900	4000	60	1.504	0.174	0.0110	W46	
R2475ZD28R	2800	2800	2475	31000	4.81×10^6	140	3900	4000	60	1.504	0.174	0.0110	W46	
R2619ZC18J	1800	1800	2619	33800	5.71×10^6	50	1850	4000	60	1.308	0.173	0.0110	W13	
R2619ZC18K	1800	1800	2619	33800	5.71×10^6	60	1850	4000	60	1.308	0.173	0.0110	W13	
R2619ZC18L	1800	1800	2619	33800	5.71×10^6	65	1850	4000	60	1.308	0.173	0.0110	W13	
R2619ZC20J	2000	2000	2619	33800	5.71×10^6	50	1850	4000	60	1.308	0.173	0.0110	W13	

Distributed Gate Thyristors

Capsule Types

Type Part No. ➢ New	V_{DRM} V	V_{RRM} V	I_{TAV} T_K = 55°C A	I_{TSM} 10 ms ½ sine $V_R \leq 60\%\ V_{RRM}$ A	I^2t A^2s	t_q @ 200 V/µs µs	Typ. Reverse Recovery Charge Q_{rr} µC	T_{JM} @ I_{TM} A	@-di/dt A/µs	V_{T0} @T_{JM} = 125°C V	r_T mΩ	R_{thJK} 180° Sine K/W	Fig. No.	Package style Outlines on pages O-01...O-29
R2619ZC20K	2000	2000	2619	33800	5.71×10^6	60	1850	4000	60	1.308	0.173	0.0110	W13	
R2619ZC20L	2000	2000	2619	33800	5.71×10^6	65	1850	4000	60	1.308	0.173	0.0110	W13	
R2619ZC21J	2100	1800	2619	33800	5.71×10^6	50	1850	4000	60	1.308	0.173	0.0110	W13	
R2619ZC21K	2100	1800	2619	33800	5.71×10^6	60	1850	4000	60	1.308	0.173	0.0110	W13	
R2619ZC21L	2100	1800	2619	33800	5.71×10^6	65	1850	4000	60	1.308	0.173	0.0110	W13	
R2619ZC25J	2500	2100	2619	33800	5.71×10^6	50	1850	4000	60	1.308	0.173	0.0110	W13	
R2619ZC25K	2500	2100	2619	33800	5.71×10^6	60	1850	4000	60	1.308	0.173	0.0110	W13	
R2619ZC25L	2500	2100	2619	33800	5.71×10^6	65	1850	4000	60	1.308	0.173	0.0110	W13	
R2619ZD18J	1800	1800	2619	33800	5.71×10^6	50	1850	4000	60	1.308	0.173	0.0110	W46	
R2619ZD18K	1800	1800	2619	33800	5.71×10^6	60	1850	4000	60	1.308	0.173	0.0110	W46	
R2619ZD18L	1800	1800	2619	33800	5.71×10^6	65	1850	4000	60	1.308	0.173	0.0110	W46	
R2619ZD20J	2000	2000	2619	33800	5.71×10^6	50	1850	4000	60	1.308	0.173	0.0110	W46	
R2619ZD20K	2000	2000	2619	33800	5.71×10^6	60	1850	4000	60	1.308	0.173	0.0110	W46	
R2619ZD20L	2000	2000	2619	33800	5.71×10^6	65	1850	4000	60	1.308	0.173	0.0110	W46	
R2619ZD21J	2100	1800	2619	33800	5.71×10^6	50	1850	4000	60	1.308	0.173	0.0110	W46	W48 Weight 2000 g
R2619ZD21K	2100	1800	2619	33800	5.71×10^6	60	1850	4000	60	1.308	0.173	0.0110	W46	
R2619ZD21L	2100	1800	2619	33800	5.71×10^6	65	1850	4000	60	1.308	0.173	0.0110	W46	
R2619ZD25J	2500	2100	2619	33800	5.71×10^6	50	1850	4000	60	1.308	0.173	0.0110	W46	
R2619ZD25K	2500	2100	2619	33800	5.71×10^6	60	1850	4000	60	1.308	0.173	0.0110	W46	
R2619ZD25L	2500	2100	2619	33800	5.71×10^6	65	1850	4000	60	1.308	0.173	0.0110	W46	
R2620ZC22J	2200	2200	2620	33800	5.71×10^6	50	2100	4000	60	1.500	0.143	0.0110	W13	
R2620ZC22K	2200	2200	2620	33800	5.71×10^6	60	2100	4000	60	1.500	0.143	0.0110	W13	
R2620ZC22L	2200	2200	2620	33800	5.71×10^6	65	2100	4000	60	1.500	0.143	0.0110	W13	
R2620ZC25J	2500	2500	2620	33800	5.71×10^6	50	2100	4000	60	1.500	0.143	0.0110	W13	
R2620ZC25K	2500	2500	2620	33800	5.71×10^6	60	2100	4000	60	1.500	0.143	0.0110	W13	
R2620ZC25L	2500	2500	2620	33800	5.71×10^6	65	2100	4000	60	1.500	0.143	0.0110	W13	
R2620ZD22J	2200	2200	2620	33800	5.71×10^6	50	2100	4000	60	1.500	0.143	0.0110	W46	
R2620ZD22K	2200	2200	2620	33800	5.71×10^6	60	2100	4000	60	1.500	0.143	0.0110	W46	
R2620ZD22L	2200	2200	2620	33800	5.71×10^6	65	2100	4000	60	1.500	0.143	0.0110	W46	
R2620ZD25J	2500	2500	2620	33800	5.71×10^6	50	2100	4000	60	1.500	0.143	0.0110	W46	
R2620ZD25K	2500	2500	2620	33800	5.71×10^6	60	2100	4000	60	1.500	0.143	0.0110	W46	
R2620ZD25L	2500	2500	2620	33800	5.71×10^6	65	2100	4000	60	1.500	0.143	0.0110	W46	
R2714ZC14H	1400	1400	2714	35600	6.34×10^6	40	1400	4000	60	1.250	0.163	0.0110	W13	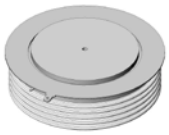
R2714ZC14J	1400	1400	2714	35600	6.34×10^6	50	1400	4000	60	1.250	0.163	0.0110	W13	
R2714ZC14K	1400	1400	2714	35600	6.34×10^6	60	1400	4000	60	1.250	0.163	0.0110	W13	
R2714ZC18H	1800	1800	2714	35600	6.34×10^6	40	1400	4000	60	1.250	0.163	0.0110	W13	
R2714ZC18J	1800	1800	2714	35600	6.34×10^6	50	1400	4000	60	1.250	0.163	0.0110	W13	W51 Weight 1700 g
R2714ZC18K	1800	1800	2714	35600	6.34×10^6	60	1400	4000	60	1.250	0.163	0.0110	W13	
R2714ZD14H	1400	1400	2714	35600	6.34×10^6	40	1400	4000	60	1.250	0.163	0.0110	W46	
R2714ZD14J	1400	1400	2714	35600	6.34×10^6	50	1400	4000	60	1.250	0.163	0.0110	W46	
R2714ZD14K	1400	1400	2714	35600	6.34×10^6	60	1400	4000	60	1.250	0.163	0.0110	W46	
R2714ZD18H	1800	1800	2714	35600	6.34×10^6	40	1400	4000	60	1.250	0.163	0.0110	W46	
R2714ZD18J	1800	1800	2714	35600	6.34×10^6	50	1400	4000	60	1.250	0.163	0.0110	W46	
R2714ZD18K	1800	1800	2714	35600	6.34×10^6	60	1400	4000	60	1.250	0.163	0.0110	W46	
R3047TC24K	2400	2400	3047	50000	12.5×10^6	60	2100	4000	60	1.580	0.170	0.0080	W14	
R3047TC24L	2400	2400	3047	50000	12.5×10^6	65	2100	4000	60	1.580	0.170	0.0080	W14	
R3047TC24M	2400	2400	3047	50000	12.5×10^6	70	2100	4000	60	1.580	0.170	0.0080	W14	
R3047TC24N	2400	2400	3047	50000	12.5×10^6	100	2100	4000	60	1.580	0.170	0.0080	W14	
R3047TC28K	2800	2800	3047	50000	12.5×10^6	60	2100	4000	60	1.580	0.170	0.0080	W14	
R3047TC28L	2800	2800	3047	50000	12.5×10^6	65	2100	4000	60	1.580	0.170	0.0080	W14	
R3047TC28M	2800	2800	3047	50000	12.5×10^6	70	2100	4000	60	1.580	0.170	0.0080	W14	
R3047TC28N	2800	2800	3047	50000	12.5×10^6	100	2100	4000	60	1.580	0.170	0.0080	W14	

Distributed Gate Thyristors

Capsule Types

Type Part No. ➢ New	V_{DRM} V	V_{RRM} V	I_{TAV} T_K = 55°C A	I_{TSM} 10 ms ½ sine $V_R \leq 60\%\ V_{RRM}$ A	I^2t A^2s	t_q @ 200 V/µs µs	Typ. Reverse Recovery Charge Q_{rr} µC	T_{JM} @ I_{TM} A	@-di/dt A/µs	V_{T0} @ T_{JM} V	r_T mΩ	R_{thJK} 180° Sine K/W	Fig. No.	Package style Outlines on pages O-01...O-29
R3047TD24K	2400	2400	3047	50000	12.5 x 10^6	60	2100	4000	60	1.580	0.170	0.0080	W51	
R3047TD24L	2400	2400	3047	50000	12.5 x 10^6	65	2100	4000	60	1.580	0.170	0.0080	W51	
R3047TD24M	2400	2400	3047	50000	12.5 x 10^6	70	2100	4000	60	1.580	0.170	0.0080	W51	
R3047TD24N	2400	2400	3047	50000	12.5 x 10^6	100	2100	4000	60	1.580	0.170	0.0080	W51	
R3047TD28K	2800	2800	3047	50000	12.5 x 10^6	60	2100	4000	60	1.580	0.170	0.0080	W51	
R3047TD28L	2800	2800	3047	50000	12.5 x 10^6	65	2100	4000	60	1.580	0.170	0.0080	W51	
R3047TD28M	2800	2800	3047	50000	12.5 x 10^6	70	2100	4000	60	1.580	0.170	0.0080	W51	
R3047TD28N	2800	2800	3047	50000	12.5 x 10^6	100	2100	4000	60	1.580	0.170	0.0080	W51	
R3370ZC12C	1200	1200	3370	43900	9.64 x 10^6	15	600	4000	60	1.353	0.064	0.0110	W13	
R3370ZC12D	1200	1200	3370	43900	9.64 x 10^6	20	600	4000	60	1.353	0.064	0.0110	W13	
R3370ZC12E	1200	1200	3370	43900	9.64 x 10^6	25	600	4000	60	1.353	0.064	0.0110	W13	
R3370ZD12C	1200	1200	3370	43900	9.64 x 10^6	15	600	4000	60	1.353	0.064	0.0110	W46	
R3370ZD12D	1200	1200	3370	43900	9.64 x 10^6	20	600	4000	60	1.353	0.064	0.0110	W46	
R3370ZD12E	1200	1200	3370	43900	9.64 x 10^6	25	600	4000	60	1.353	0.064	0.0110	W46	
R3559TC16K	1600	1600	3559	38900	7.57 x 10^6	60	1750	4000	60	1.173	0.155	0.0080	W14	W55 Weight 1800 g
R3559TC16M	1600	1600	3559	38900	7.57 x 10^6	70	1750	4000	60	1.173	0.155	0.0080	W14	
R3559TC16N	1600	1600	3559	38900	7.57 x 10^6	100	1750	4000	60	1.173	0.155	0.0080	W14	
R3559TC20K	2000	2000	3559	38900	7.57 x 10^6	60	1750	4000	60	1.173	0.155	0.0080	W14	
R3559TC20M	2000	2000	3559	38900	7.57 x 10^6	70	1750	4000	60	1.173	0.155	0.0080	W14	
R3559TC20N	2000	2000	3559	38900	7.57 x 10^6	100	1750	4000	60	1.173	0.155	0.0080	W14	
R3559TD16K	1600	1600	3559	38900	7.57 x 10^6	60	1750	4000	60	1.173	0.155	0.0080	W51	
R3559TD16M	1600	1600	3559	38900	7.57 x 10^6	70	1750	4000	60	1.173	0.155	0.0080	W51	
R3559TD16N	1600	1600	3559	38900	7.57 x 10^6	100	1750	4000	60	1.173	0.155	0.0080	W51	
R3559TD20K	2000	2000	3559	38900	7.57 x 10^6	60	1750	4000	60	1.173	0.155	0.0080	W51	
R3559TD20M	2000	2000	3559	38900	7.57 x 10^6	70	1750	4000	60	1.173	0.155	0.0080	W51	
R3559TD20N	2000	2000	3559	38900	7.57 x 10^6	100	1750	4000	60	1.173	0.155	0.0080	W51	
R3636EC16K	1600	1600	3636	38900	7.57 x 10^6	60	1750	4000	60	1.173	0.155	0.0075	W55	
R3636EC16M	1600	1600	3636	38900	7.57 x 10^6	70	1750	4000	60	1.173	0.155	0.0075	W55	
R3636EC16N	1600	1600	3636	38900	7.57 x 10^6	100	1750	4000	60	1.173	0.155	0.0075	W55	
R3636EC20K	2000	2000	3636	38900	7.57 x 10^6	60	1750	4000	60	1.173	0.155	0.0075	W55	
R3636EC20M	2000	2000	3636	38900	7.57 x 10^6	70	1750	4000	60	1.173	0.155	0.0075	W55	
R3636EC20N	2000	2000	3636	38900	7.57 x 10^6	100	1750	4000	60	1.173	0.155	0.0075	W55	
R3708FC45V	4500	3000	3708	50000	12.5 x 10^6	250	8800	4000	60	1.473	0.156	0.0065	W15	
R3708FC45W	4500	3000	3708	50000	12.5 x 10^6	300	8800	4000	60	1.473	0.156	0.0065	W15	W70 Weight 550 g
R3708FD45V	4500	3000	3708	50000	12.5 x 10^6	250	8800	4000	60	1.473	0.156	0.0065	W48	
R3708FD45W	4500	3000	3708	50000	12.5 x 10^6	300	8800	4000	60	1.473	0.156	0.0065	W48	
R3968FC24K	2400	2400	4001	66000	21.78 x 10^6	60	2600	4000	60	1.453	0.125	0.0065	W15	
R3968FC24M	2400	2400	4001	66000	21.78 x 10^6	70	2600	4000	60	1.453	0.125	0.0065	W15	
R3968FC24N	2400	2400	4001	66000	21.78 x 10^6	100	2600	4000	60	1.453	0.125	0.0065	W15	
R3968FC28K	2800	2800	4001	66000	21.78 x 10^6	60	2600	4000	60	1.453	0.125	0.0065	W15	
R3968FC28M	2800	2800	4001	66000	21.78 x 10^6	70	2600	4000	60	1.453	0.125	0.0065	W15	
R3968FC28N	2800	2800	4001	66000	21.78 x 10^6	100	2600	4000	60	1.453	0.125	0.0065	W15	
R3968FD24K	2400	2400	4001	66000	21.78 x 10^6	60	2600	4000	60	1.453	0.125	0.0065	W48	
R3968FD24M	2400	2400	4001	66000	21.78 x 10^6	70	2600	4000	60	1.453	0.125	0.0065	W48	
R3968FD24N	2400	2400	4001	66000	21.78 x 10^6	100	2600	4000	60	1.453	0.125	0.0065	W48	
R3968FD28K	2800	2800	4001	66000	21.78 x 10^6	60	2600	4000	60	1.453	0.125	0.0065	W48	
R3968FD28M	2800	2800	4001	66000	21.78 x 10^6	70	2600	4000	60	1.453	0.125	0.0065	W48	
R3968FD28N	2800	2800	4001	66000	21.78 x 10^6	100	2600	4000	60	1.453	0.125	0.0065	W48	

T_{JM} = 125°C

Distributed Gate Thyristors

Asymmetric Thyristors

These devices are available up to a voltage of 2800V. They exhibit very fast turn-on times and are capable of very high values of both critical di/dt and dv/dt. For the device type, they also exhibit high current ratings in excess of 1000A.

Type Part No.	V_{DRM} V_{RRM} V	I_{TAV} T_K = 55°C A	I_{TSM} 10 ms A	I^2t ½ sine $V_R \leq 60\%\ V_{RRM}$ A^2s	t_{gd} 25°c typ. µs	typ. t_q @ 200 V/µs µC	$(di/dt)_{cr}$ @ T_{JM} A	$(dv/dt)_{cr}$ @ T_{JM} A/µs	V_{T0} @T_{JM} V	r_T @T_{JM} mΩ	T_{JM} °C	R_{thJK} 180° Sine K/W	Fig. No.	Package style Outlines on pages O-01...O-29
A0516YC240	2400	516	5700	1.51 x 10^3	0.5	55	2000	3000	1.630	0.850	125	0.050	W58	
A0516YC280	2800	516	5700	1.51 x 10^3	0.5	55	2000	3000	1.630	0.850	125	0.050	W58	
A1237NC240	2400	1237	18000	1.62 x 10^6	0.9	30	2000	3000	1.707	0.212	125	0.024	W11	
A1237NC280	2800	1237	18000	1.62 x 10^6	0.9	30	2000	3000	1.707	0.212	125	0.024	W11	

W11 Weight 510 g

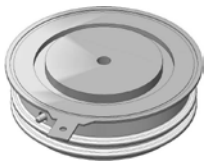

W58 Weight 90 g

Pulse Thyristors

IXYS UK Westcode Ltd are at the forefront of solid state pulsed power technology, offering custom solutions to complex pulsed power problems.
Standard Devices with voltage ratings to 2.5kV, pulsed currents to 150kA peak and di/dt capabilities to over 30kA/µs are available. Please consult factory for other requirements

Type Part No.	V_{DRM} V_{GK} = 2 V V	V_{RRM} V	V_{DC} V_{GK} = 2 V V	I_{PULSE} kA	$(di/dt)_{cr}$ @ T_{JM} kA/µs	V_{T0} @T_{JM} V	r_T @T_{JM} mΩ	T_{JM} °C	R_{thJC} 180° Sine K/W	Fig. No.	Package style Outlines on pages O-01...O-29
Y200CKC250	2500	2000	1500	20	5	1.216	2.196	125	0.065	W34	
Y500CNC250	2500	2000	1500	50	11	1.755	1.122	125	0.027	W36	

W34 Weight 120 g

W36 Weight 500 g

Gate Turn Off Thyristors

IXYS UK offers a broad range of high specification devices with voltage ratings to 4.5kV (2.8kV DC link) and controllable current ratings of up to 4kA are available to meet the toughest demands in applications such as traction propulsion and auxiliaries, AC industrial drives, FACT's and active VAr controllers. Offering both symmetrical devices for applications with a reverse blocking requirement e.g. current sourced inverters and asymmetric blocking devices for applications where no reverse blocking requirement exists e.g. voltage sourced inverters.

Gate Turn-off Thyristors are still the component of choice when it comes to very high power converters and we remain totally commited to this technology for the foreseeable future.

Type Part No. ➢ New	V_{DRM} V_{GK} = -2V V	V_{RRM} V	I_{TGQM} @ C_S A	 µC	I_{TAV} T_K = 55°C A	I_{TSM} 10 ms ½ sine kA	I^2t $V_R \leq 10$ V kA²s	Typ. Switching Times t_{gt} µs	 t_{gq} µs	V_T I_T = I_{TGQM} V	T_{JM} °C	R_{thJK} 180° Sine K/W	Fig. No.
G1000NC450	4500	18	1000	2.0	545	8.00	320 x 10³	4.5	14	4.0	125	0.0270	W36
G1000QC250	2500	18	1000	1.0	615	8.00	320 x 10³	2.8	13	2.5	125	0.0380	W35
G1000QC450	4500	18	1000	1.0	615	8.00	320 x 10³	2.8	13	2.5	125	0.0380	W35
G2000HF250	2500	18	2000	4.0	1030	16.00	1.28 × 10⁶	3.0	25	2.8	125	0.0220	W85
G2000HF450	4500	18	2000	4.0	890	13.70	938 × 10³	4.0	25	3.5	125	0.0220	W85
G2500HF250	2500	18	2500	6.0	1085	16.00	1.28 × 10⁶	3.0	25	3.1	125	0.0220	W85
G3000TF250	2500	18	3000	5.0	1640	30.00	4.5 × 10⁶	3.0	25	2.5	125	0.0150	W86
G3000TF450	4500	18	3000	6.0	1180	24.00	2.88 × 10⁶	9.0	28	4.0	125	0.0150	W86
G4000EC450	4500	18	4000	6.0	1270	25.00	3.13 x 10⁶	7.5	28	4.4	125	0.0150	W33
H0500KC200	2000	2000	500	1.0	280	3.00	45 x 10³	2.0	5	3.2	125	0.0650	W34
H0500KC20Y	2000	100	500	1.0	280	3.00	45 x 10³	2.0	5	3.2	125	0.0650	W34
H0500KC25D	2500	2000	500	1.0	280	3.00	45 x 10³	2.0	5	3.2	125	0.0650	W34
H0500KC25Y	2500	100	500	1.0	280	3.00	45 x 10³	2.0	5	3.2	125	0.0650	W34
H0700KC140	1400	1400	700	1.5	360	4.00	80 x 10³	3.0	5	2.75	125	0.0630	W34
H0700KC14Y	1400	100	700	1.5	360	4.00	80 x 10³	3.0	5	2.75	125	0.0630	W34
H0700KC17D	1700	1400	700	1.5	360	4.00	80 x 10³	3.0	5	2.75	125	0.0630	W34
H0700KC17Y	1700	100	700	1.5	360	4.00	80 x 10³	3.0	5	2.75	125	0.0630	W34
H1200NC200	2000	2000	1200	3.0	670	10.50	550 x 10³	3.0	12	3.3	125	0.0270	W36
H1200NC20Y	2000	100	1200	3.0	670	10.50	550 x 10³	3.0	12	3.3	125	0.0270	W36
H1200NC25D	2500	2000	1200	3.0	670	10.50	550 x 10³	3.0	12	3.3	125	0.0270	W36
H1200NC25Y	2500	100	1200	3.0	670	10.50	550 x 10³	3.0	12	3.3	125	0.0270	W36
S0300SR12D	1200	960	480	1.0	215	3.50	61.2 x 10³	3.5	9	2.4	125	0.1300	W87
S0300SR12Y	1200	100	480	1.0	215	3.50	61.2 x 10³	3.5	9	2.4	125	0.1300	W87
➢ **S0500YC20Y**	2000	100	500	1.0	275	4.00	80 x 10³	3.5	10	2.5	125	0.0870	W93
➢ **S0500YC25Y**	2500	100	500	1.0	275	4.00	80 x 10³	3.5	10	2.5	125	0.0870	W93
S0500KC200	2000	2000	500	1.0	330	4.00	80 x 10³	3.5	10	2.5	125	0.0650	W34
S0500KC20Y	2000	100	500	1.0	330	4.00	80 x 10³	3.5	10	2.5	125	0.0650	W34
S0500KC25D	2500	2000	500	1.0	330	4.00	80 x 10³	3.5	10	2.5	125	0.0650	W34
S0500KC25Y	2500	100	500	1.0	330	4.00	80 x 10³	3.5	10	2.5	125	0.0650	W34
S0700KC140	1400	1400	700	1.5	430	5.00	125 x 10³	3.0	10	2.2	125	0.0630	W34
S0700KC14Y	1400	100	700	1.5	430	5.00	125 x 10³	3.0	10	2.2	125	0.0630	W34
S0700KC17D	1700	1400	700	1.5	430	5.00	125 x 10³	3.0	10	2.2	125	0.0630	W34
S0700KC17Y	1700	100	700	1.5	430	5.00	125 x 10³	3.0	10	2.2	125	0.0630	W34
S1000NC300	3000	3000	1000	2.0	600	10.00	500 x 10³	5.0	19	3.5	125	0.0270	W36
S1000NC30Y	3000	100	1000	2.0	600	10.00	500 x 10³	5.0	19	3.5	125	0.0270	W36
S1000NC36D	3600	2880	1000	2.0	600	10.00	500 x 10³	5.0	19	3.5	125	0.0270	W36
S1000NC36Y	3600	100	1000	2.0	600	10.00	500 x 10³	5.0	19	3.5	125	0.0270	W36
S1200NC200	2000	2000	1200	3.0	790	13.00	840 x 10³	4.5	19	2.7	125	0.0270	W36
S1200NC20Y	2000	100	1200	3.0	790	13.00	840 x 10³	4.5	19	2.7	125	0.0270	W36
S1200NC25D	2500	2000	1200	3.0	790	13.00	840 x 10³	4.5	19	2.7	125	0.0270	W36
S1200NC25Y	2500	100	1200	3.0	790	13.00	840 x 10³	4.5	19	2.7	125	0.0270	W36

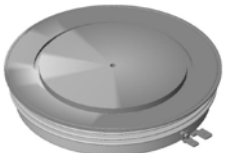

W33 Weight 1500 g

W34 Weight 120 g

W35 Weight 300 g

W36 Weight 500 g

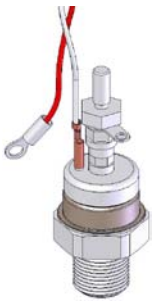

W87 Weight 250 g

Outlines on pages O-01...O-29

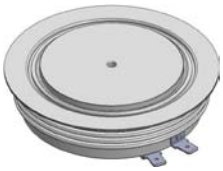

W85 Weight 990 g

W86 Weight 1240 g

W93 Weight 90 g

Insulated Gate Bi-polar Transistors
Capsule Types

As a pioneer of Press-Pack IGBT technology, we are able to offer a range of class leading devices with voltage ratings of 2.5kV (1.25kV DC link) and 4.5kV (2.8kV DC link). The construction of these devices is totally free from wire and solder bonds which all but eliminates the problems of mechanical fatigue associated with conventional modules. Internal stray inductance in both the gate connections and emitter connections is vastly reduced when compared to conventional modules leading to improved ruggedness and short circuit behavior, which is further enhanced by direct cooling of the emitter side of the chip.

These devices are based on a state of the art soft punch through (SPT++) process, which yields exceptional values of VCE(sat) and quiet switching behavior despite the high voltage ratings, yet the devices feature a positive temperature coefficient making them suitable for reliable parallel operation. Devices available with or without integral anti-parallel diode; a range of complimentary extra fast recovery diodes optimized for use with these IGBTs are available now with a new generation using improved technology in development. Please contact your representative for more information.

The press-pack IGBT‘s exhibit exceptional power cycling performance; typically an order of magnitude better than modules, making them highly suited to applications such as induction power supplies, melting/heating and mass transit systems where there are repeated cyclic power demands. Press-pack IGBT‘s have rupture rated housings making them a good choice in critical applications such as mining, the petro-chemical industry, and transportation applications. Press-pack IGBT‘s have a stable short circuit failure mode which, as well as safety benefits, makes them an ideal choice for medium and high voltage applications where series connection is required. Press-pack construction is the obvious choice where series connection is needed and the short circuit failure mode allows for the design in of n+redundancy. Typical examples include HVDC, Active VAr controllers and medium voltage drives.

These PPIGBT‘s are largely backwardly compatible with standard 2.5kV and 4.5kV GTOs in many applications such as AC drives. This makes these parts a simple and economical path to upgrade or refurbish equipment that previously used GTOs, such as locomotives or medium voltage drives.They are suitable for all cooling options including direct liquid immersion. Complementary gate drives, mounting clamps and passive components available.

Type	V_{CES}	I_C	I_{CM}	$V_{CE(sat)}$	IGBT Switching typical		V_F	Diode Recovery typical			T_{JM}	R_{thJK}		Fig. No.
Part No.				@ I_C	E_{ON}	E_{OFF}	@ I_C	I_{rm}	t_{rr}	Q_r		IGBT	Diode	
	V	A	A	V	J	J	V	A	µs	µC	°C	K/W	K/W	
T0360NB25A	2500	360	720	2.95	0.85	0.60	2.25	240	0.9	320	125	0.0541	0.0730	W40
T0500NB25E	2500	500	1000	2.90	1.20	0.84	N/A	N/A	N/A	N/A	125	0.0386	N/A	W40
T0570VB25G	2500	570	1140	2.95	1.40	0.95	2.05	320	1.6	450	125	0.0338	0.0365	W67
T0850VB25E	2500	850	1700	2.90	2.00	1.40	N/A	N/A	N/A	N/A	125	0.0225	N/A	W67
T1200TB25A	2500	1200	2400	3.00	2.80	2.00	2.50	660	1.1	950	125	0.0169	0.0292	W41
T1500TB25E	2500	1500	3000	2.90	3.70	2.60	N/A	N/A	N/A	N/A	125	0.0129	N/A	W41
T2250AB25E	2500	2250	4500	2.90	5.30	3.70	N/A	N/A	N/A	N/A	125	0.0085	N/A	W71
T0160NB45A	4500	160	320	3.40	1.10	0.70	3.75	120	2.7	300	125	0.0720	0.1720	W40
T0240NB45E	4500	240	480	3.80	1.50	1.10	N/A	N/A	N/A	N/A	125	0.0525	N/A	W40
T0340VB45G	4500	340	680	3.50	2.90	1.40	3.45	220	3.2	500	125	0.0364	0.0576	W67
T0510VB45E	4500	510	1020	3.60	4.20	2.10	N/A	N/A	N/A	N/A	125	0.0243	N/A	W67
T0600TB45A	4500	600	1200	3.70	4.60	2.90	3.90	640	1.2	700	125	0.0218	0.0432	W41
T0800TB45E	4500	800	1600	3.50	7.00	4.30	N/A	N/A	N/A	N/A	125	0.0156	N/A	W41
T0800EB45G	4500	800	1600	3.60	6.30	3.70	3.50	800	1.5	1020	125	0.0156	0.0247	W44
T0900EB45A	4500	900	1800	3.80	3.80	3.60	3.90	610	2.3	920	125	0.0140	0.0260	W44
T1200EB45E	4500	1200	2400	3.60	5.70	5.10	N/A	N/A	N/A	N/A	125	0.0080	N/A	W44
T1600GB45G	4500	1600	3200	3.50	14.00	8.70	3.45	1380	1.7	1970	125	0.0078	0.0123	W45
T1800GB45A	4500	1800	3600	3.60	12.60	9.50	3.90	1600	1.6	1850	125	0.0073	0.0144	W45
T2400GB45E	4500	2400	4800	3.60	15.00	14.00	N/A	N/A	N/A	N/A	125	0.0052	N/A	W45

W40 Weight 430 g

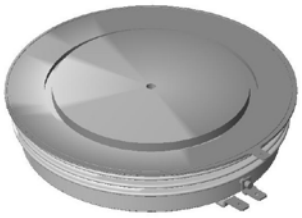

W41 Weight 1200 g

W44 Weight 1200 g

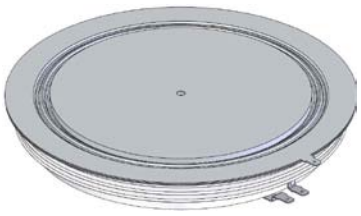

W45 Weight 2000 g

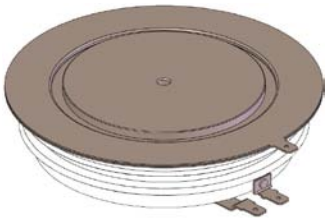

W67 Weight 650 g

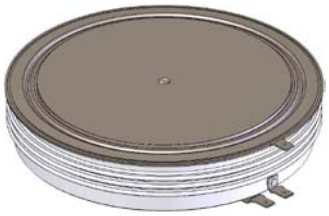

W71 Weight 1500 g

Outlines on pages O-01...O-29

Press-Pack IGBT Gate Drive Units

The C044BG400 IGBT Gate Driver is a low power consumption driver with on board V_{CE} desaturation detection for high reliability application. The driver features a fibre-optic communication interface for drive, status and switching feedback signals. A fully supervised DC/DC converter with EMI filtering, low coupling capacitance and high partial discharge level is integrated into the board. The high voltage collector sense and gate interface are implemented on a separate card to allow close coupling to the IGBT. A range of pre-configured boards is available to complement IXYS UK's range of press-pack IGBTs – other applications on request.

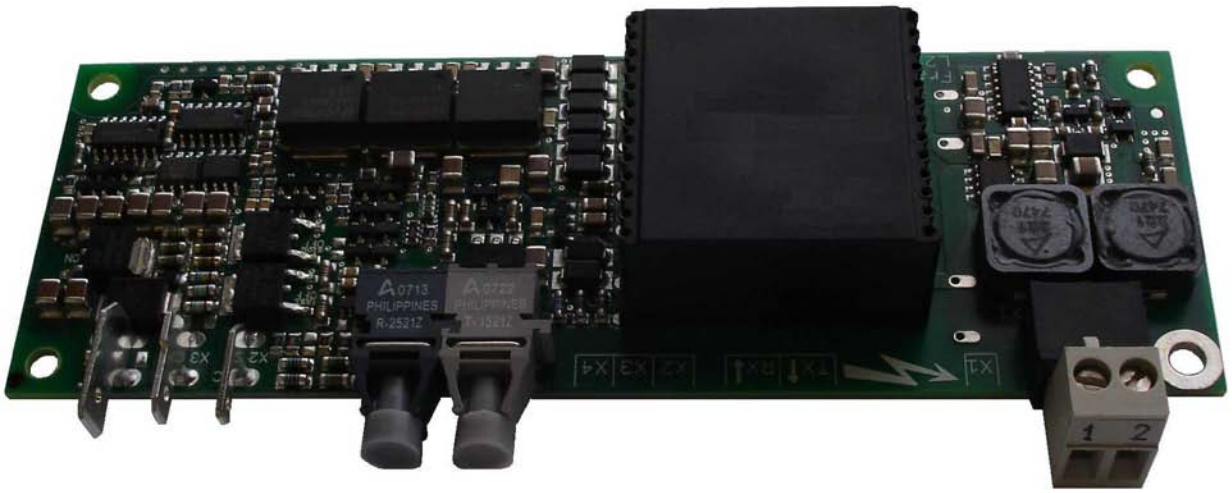

A range of pre-configured boards is available to complement IXYS UK's range of press-pack IGBTs see table below, other applications on request.

Gate Drive Part Number	IGBT Type
C0044BG400SBK	T0160NB45A
C0044BG400SBL	T0240NB45E
C0044BG400SBQ	T0340VB45G
C0044BG400SBA	T0360NB25A
C0044BG400SBB	T0500NB25E
C0044BG400SBE	T0510VB45E
C0044BG400SBF	T0570VB25G
C0044BG400SBM	T0600TB45A
C0044BG400SBG	T0800EB45G
C0044BG400SBN	T0800TB45E
C0044BG400SBH	T0850VB25E
C0044BG400SBP	T0900EB45A
C0044BG400SBR	T1200EB45E
C0044BG400SBC	T1200TB25A
C0044BG400SBD	T1500TB25E
C0044BG400SBJ	T1600GB45G
C0044BG400SBS	T1800GB45A
C0044BG400SBV	T2250AB25E
C0044BG400SBT	T2400GB45E

FEATURES

- High reliability topology
- Designed for ultra low power consumption
- Build in DC/DC-converter with soft start
- Integrated input filter for low EMI
- Separate low impedance path for parasitic EMI currents
- PD-Voltage levels available up to 11 kV on request.
- Low impedance from gate to emitter at start-up and power fail
- Monitoring of all secondary supply voltages
- Monitoring of IGBT switching status (VCE-de-sat detection)
- Soft switch-OFF at V_{CE}-de-sat fault condition
- Fiber-optic links for switching commands and status control
- Low light protection for input signal
- Short-pulse suppression, configurable
- Balanced propagation delay time
- Gate Current up to 44 A
- Optional gate-speed-up capacitors

APPICATION

- Large and medium drives
- Renewable generation.
- Utilities scale converters

Dual Thyristor Modules

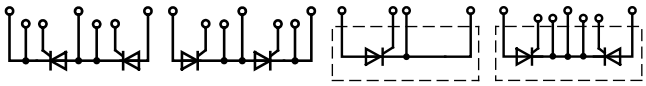

MCR... MCC... MCO MCK...

IXYS UK Westcode Ltd. has UL Certification for most modules (Underwriters Laboratories Inc). See the UL Listing.

Part No.	V_{RRM} V_{DRM}	I_{TAV}	@ T_C	I_{TRMS}	I_{TSM} 125°C 10 ms	V_{T0}	r_T	T_{VJM}	R_{thJC} per die	R_{thCH} per die	Fig. No.
○ Not for new design ➢ New	V	A	°C	A	A	V	mΩ	°C	K/W	K/W	
MCC320-30io2	3000	327	85	765	5000	1.150	0.800	125	0.0650	0.2000	W74
MCC320-36io2	3600	327	85	765	5000	1.150	0.800	125	0.0650	0.2000	W74
MCC431-20io2	2000	429	85	1020	10900	1.000	0.410	125	0.0620	0.0200	W74
MCC431-22io2	2200	429	85	1020	10900	1.000	0.410	125	0.0620	0.0200	W74
MCC431-24io2	2400	429	85	1020	10900	1.000	0.410	125	0.0620	0.0200	W74
○ MCC500-14io1	1400	500	89	1294	16500	0.850	0.270	125	0.0620	0.0200	W63
○ MCC500-18io1	1800	500	89	1294	16500	0.850	0.270	125	0.0620	0.0200	W63
○ MCC500-22io1	2200	500	80	1071	14000	0.880	0.460	125	0.0620	0.0200	W63
○ MCK500-14io1	1400	500	89	1294	16500	0.850	0.270	125	0.0620	0.0200	W63
○ MCK500-18io1	1800	500	89	1294	16500	0.850	0.270	125	0.0620	0.0200	W63
○ MCK500-22io1	2200	500	80	1071	14000	0.880	0.460	125	0.0620	0.0200	W63
MCC501-12io2	1200	503	85	1195	14500	0.850	0.300	125	0.0620	0.0200	W74
MCC501-14io2	1400	503	85	1195	14500	0.850	0.300	125	0.0620	0.0200	W74
MCC501-16io2	1600	503	85	1195	14500	0.850	0.300	125	0.0620	0.0200	W74
MCC501-18io2	1800	503	85	1195	14500	0.850	0.300	125	0.0620	0.0200	W74
➢ MCC552-12io2	1200	550	85	1300	15800	0.770	0.259	125	0.0620	0.0200	W74
➢ MCC552-14io2	1400	550	85	1300	15800	0.770	0.259	125	0.0620	0.0200	W74
➢ MCC552-16io2	1600	550	85	1300	15800	0.770	0.259	125	0.0620	0.0200	W74
➢ MCC500-30io7	3000	500	85	1181	18000	1.079	0.422	125	0.0500	0.0160	W88
➢ MCC500-36io7	3600	500	85	1181	18000	1.079	0.422	125	0.0500	0.0160	W88
➢ MCR500-30io7	3000	500	85	1181	18000	1.079	0.422	125	0.0500	0.0160	W88
➢ MCR500-36io7	3600	500	85	1181	18000	1.079	0.422	125	0.0500	0.0160	W88
➢ MCC580-28io7	2800	581	85	1372	21000	0.926	0.313	125	0.0500	0.0160	W88
➢ MCR580-28io7	2800	581	85	1372	21000	0.926	0.313	125	0.0500	0.0160	W88
➢ MCC650-24io7	2400	646	85	1542	24500	0.874	0.227	125	0.0500	0.0160	W88
➢ MCR650-24io7	2400	646	85	1542	24500	0.874	0.227	125	0.0500	0.0160	W88
➢ MCC720-14io7	1400	719	85	1633	28000	0.823	0.241	125	0.0500	0.0160	W88
➢ MCC720-18io7	1800	719	85	1633	28000	0.823	0.241	125	0.0500	0.0160	W88
➢ MCR720-14io7	1400	719	85	1633	28000	0.823	0.241	125	0.0500	0.0160	W88
➢ MCR720-18io7	1800	719	85	1633	28000	0.823	0.241	125	0.0500	0.0160	W88

Outlines on pages O-01...O-29

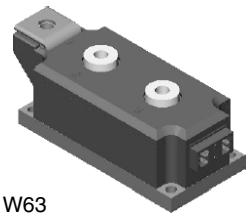

W63

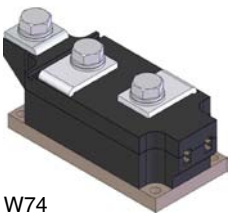

W74

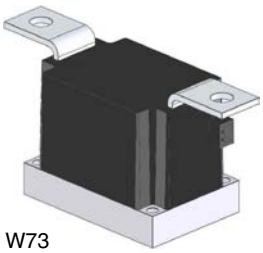

W73

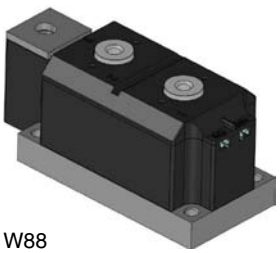

W88

Single Thyristor Modules

Type	V_{RRM} V_{DRM}	I_{TAV}	@ T_C	I_{TRMS}	I_{TSM} 125°C 10 ms	V_{T0}	r_T	T_{VJM}	R_{thJC} per die	R_{thCH} per die	Fig. No.
➢ New	V	A	°C	A	A	V	mΩ	°C	K/W	K/W	
MCO741-22io1	2200	765	85	2315	29000	0.850	0.210	125	0.042	0.0100	W73
MCO801-14io1	1400	830	85	2530	30000	0.800	0.170	125	0.042	0.0100	W73
MCO801-18io1	1800	830	85	2530	30000	0.800	0.170	125	0.042	0.0100	W73

Thyristor / Diode Modules

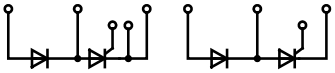

MCD... MCD...

IXYS UK Westcode Ltd. has UL Certification for most modules (Underwriters Laboratories Inc). See the UL Listing.

Part No.	V_{RRM} V_{DRM}	I_{TAV}	@ T_C	I_{TRMS}	I_{TSM} 125°C 10 ms	V_{T0}	r_T	T_{VJM}	R_{thJC} per die	R_{thCH} per die	Fig. No.	Package style Outline drawings on page O-01...O-29
○ Not for new design ➢ New	V	A	°C	A	A	V	mΩ	°C	K/W	K/W		
MCD320-30io2	3000	327	85	765	5000	1.150	0.800	125	0.065	0.0200	W74	
MCD320-36io2	3600	327	85	765	5000	1.150	0.800	125	0.065	0.0200	W74	
MDC320-30io2	3000	327	85	765	5000	1.150	0.800	125	0.065	0.0200	W74	
MDC320-36io2	3600	327	85	765	5000	1.150	0.800	125	0.065	0.0200	W74	
MCD431-20io2	2000	429	85	1020	10900	1.000	0.410	125	0.062	0.0200	W74	
MCD431-22io2	2200	429	85	1020	10900	1.000	0.410	125	0.062	0.0200	W74	
MCD431-24io2	2400	429	85	1020	10900	1.000	0.410	125	0.062	0.0200	W74	
MDC431-20io2	2000	429	85	1020	10900	1.000	0.410	125	0.062	0.0200	W74	
MDC431-22io2	2200	429	85	1020	10900	1.000	0.410	125	0.062	0.0200	W74	
MDC431-24io2	2400	429	85	1020	10900	1.000	0.410	125	0.062	0.0200	W74	
○ MCD500-14io1	1400	500	89	1294	16500	0.820	0.270	125	0.062	0.0200	W63	
○ MCD500-18io1	1800	500	89	1294	16500	0.820	0.270	125	0.062	0.0200	W63	
○ MCD500-22io1	2200	500	80	1071	14000	0.880	0.460	125	0.062	0.0200	W63	
○ MDC500-14io1	1400	500	89	1294	16500	0.820	0.270	125	0.062	0.0200	W63	
○ MDC500-18io1	1800	500	89	1294	16500	0.820	0.270	125	0.062	0.0200	W63	
○ MDC500-22io1	2200	500	80	1071	14000	0.880	0.460	125	0.062	0.0200	W63	
MCD501-12io2	1200	503	85	1195	14500	0.850	0.300	125	0.062	0.0200	W74	
MCD501-14io2	1400	503	85	1195	14500	0.850	0.300	125	0.062	0.0200	W74	
MCD501-16io2	1600	503	85	1195	14500	0.850	0.300	125	0.062	0.0200	W74	
MCD501-18io2	1800	503	85	1195	14500	0.850	0.300	125	0.062	0.0200	W74	
MDC501-12io2	1200	503	85	1195	14500	0.850	0.300	125	0.062	0.0200	W74	
MDC501-14io2	1400	503	85	1195	14500	0.850	0.300	125	0.062	0.0200	W74	
MDC501-16io2	1600	503	85	1195	14500	0.850	0.300	125	0.062	0.0200	W74	
MDC501-18io2	1800	503	85	1195	14500	0.850	0.300	125	0.062	0.0200	W74	
➢ MCD552-12io2	1200	550	85	1300	15800	0.770	0.259	125	0.062	0.0200	W74	
➢ MCD552-14io2	1400	550	85	1300	15800	0.770	0.259	125	0.062	0.0200	W74	
➢ MCD552-16io2	1600	550	85	1300	15800	0.770	0.259	125	0.062	0.0200	W74	
➢ MDC552-12io2	1200	550	85	1300	15800	0.770	0.259	125	0.062	0.0200	W74	
➢ MDC552-14io2	1400	550	85	1300	15800	0.770	0.259	125	0.062	0.0200	W74	
➢ MDC552-16io2	1600	550	85	1300	15800	0.770	0.259	125	0.062	0.0200	W74	
➢ MCD500-30io7	3000	500	85	1181	18000	1.079	0.422	125	0.05	0.0160	W88	
➢ MCD500-36io7	3600	500	85	1181	18000	1.079	0.422	125	0.05	0.0160	W88	
➢ MDC500-30io7	3000	500	85	1181	18000	1.079	0.422	125	0.05	0.0160	W88	
➢ MDC500-36io7	3600	500	85	1181	18000	1.079	0.422	125	0.05	0.0160	W88	
➢ MCD580-28io7	2800	581	85	1372	21000	0.926	0.313	125	0.05	0.0160	W88	
➢ MDC580-28io7	2800	581	85	1372	21000	0.926	0.313	125	0.05	0.0160	W88	
➢ MCD650-24io7	2400	646	85	1542	24500	0.874	0.227	125	0.05	0.0160	W88	
➢ MDC650-24io7	2400	646	85	1542	24500	0.874	0.227	125	0.05	0.0160	W88	
➢ MCD720-14io7	1400	719	85	1633	28000	0.823	0.241	125	0.05	0.0160	W88	
➢ MCD720-18io7	1800	719	85	1633	28000	0.823	0.241	125	0.05	0.0160	W88	
➢ MDC720-14io7	1400	719	85	1633	28000	0.823	0.241	125	0.05	0.0160	W88	
➢ MDC720-18io7	1800	719	85	1633	28000	0.823	0.241	125	0.05	0.0160	W88	

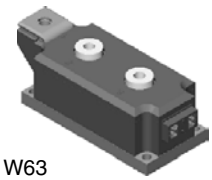

W63

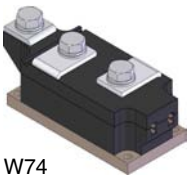

W74

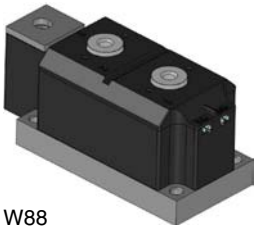

W88

Dual Diode Modules

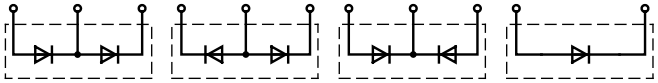

MDD... MDA... MDK... MDO...

IXYS UK Westcode Ltd. has UL Certification for most modules (Underwriters Laboratories Inc). See the UL Listing.

Part No. ○ Not for new design ➢ New	V_{RRM} V	I_{FAV} A	@ T_C °C	I_{FRMS} A	I_{FSM} 150°C 10 ms A	V_{T0} V	r_T mΩ	T_{VJM} °C	R_{thJC} per die K/W	R_{thCK} per die K/W	Fig. No.
○ **MDD600-14N1**	1400	600	111	1818	21800	0.750	0.200	150	0.0620	0.0200	W63
○ **MDD600-18N1**	1800	600	111	1818	21800	0.750	0.200	150	0.0620	0.0200	W63
○ **MDD600-22N1**	2200	600	111	1818	21800	0.750	0.200	150	0.0620	0.0200	W63
○ **MDA600-14N1**	1400	600	111	1818	21800	0.750	0.200	150	0.0620	0.0200	W63
○ **MDA600-18N1**	1800	600	111	1818	21800	0.750	0.200	150	0.0620	0.0200	W63
○ **MDA600-22N1**	2200	600	111	1818	21800	0.750	0.200	150	0.0620	0.0200	W63
○ **MDK600-14N1**	1400	600	111	1818	21800	0.750	0.200	150	0.0620	0.0200	W63
○ **MDK600-18N1**	1800	600	111	1818	21800	0.750	0.200	150	0.0620	0.0200	W63
○ **MDK600-22N1**	2200	600	111	1818	21800	0.750	0.200	150	0.0620	0.0200	W63
MDD630-30N2	3000	632	85	1273	11800	0.800	0.500	150	0.0620	0.0200	W74
MDD630-36N2	3600	632	85	1273	11800	0.800	0.500	150	0.0620	0.0200	W74
➢ **MDA630-30N2**	3000	632	85	1273	11800	0.800	0.500	150	0.0620	0.0200	W74
➢ **MDA630-36N2**	3600	632	85	1273	11800	0.800	0.500	150	0.0620	0.0200	W74
➢ **MDK630-30N2**	3000	632	85	1273	11800	0.800	0.500	150	0.0620	0.0200	W74
➢ **MDK630-36N2**	3600	632	85	1273	11800	0.800	0.500	150	0.0620	0.0200	W74
MDD 710-22N2	2200	708	85	1440	12750	0.800	0.350	150	0.0620	0.0200	W74
MDD 710-26N2	2600	708	85	1440	12750	0.800	0.350	150	0.0620	0.0200	W74
➢ **MDA 710-22N2**	2200	708	85	1440	12750	0.800	0.350	150	0.0620	0.0200	W74
➢ **MDA 710-26N2**	2600	708	85	1440	12750	0.800	0.350	150	0.0620	0.0200	W74
➢ **MDK 710-22N2**	2200	708	85	1440	12750	0.800	0.350	150	0.0620	0.0200	W74
➢ **MDK 710-26N2**	2600	708	85	1440	12750	0.800	0.350	150	0.0620	0.0200	W74
MDD 810-12N2	1200	807	85	1661	17250	0.780	0.230	150	0.0620	0.0200	W74
MDD 810-16N2	1600	807	85	1661	17250	0.780	0.230	150	0.0620	0.0200	W74
MDD 810-18N2	1800	807	85	1661	17250	0.780	0.230	150	0.0620	0.0200	W74
➢ **MDA 810-12N2**	1200	807	85	1661	17250	0.780	0.230	150	0.0620	0.0200	W74
➢ **MDA 810-16N2**	1600	807	85	1661	17250	0.780	0.230	150	0.0620	0.0200	W74
➢ **MDA 810-18N2**	1800	807	85	1661	17250	0.780	0.230	150	0.0620	0.0200	W74
➢ **MDK 810-12N2**	1200	807	85	1661	17250	0.780	0.230	150	0.0620	0.0200	W74
➢ **MDK 810-16N2**	1600	807	85	1661	17250	0.780	0.230	150	0.0620	0.0200	W74
➢ **MDK 810-18N2**	1800	807	85	1661	17250	0.780	0.230	150	0.0620	0.0200	W74
➢ **MDD1080-18N7**	1800	1080	85	2235	32000	0.782	0.157	150	0.0500	0.0160	W88
➢ **MDD1080-24N7**	2400	1080	85	2235	32000	0.782	0.157	150	0.0500	0.0160	W88
➢ **MDD1080-28N7**	2800	1080	85	2235	32000	0.782	0.157	150	0.0500	0.0160	W88
➢ **MDA1080-18N7**	1800	1080	85	2235	32000	0.782	0.157	150	0.0500	0.0160	W88
➢ **MDA1080-24N7**	2400	1080	85	2235	32000	0.782	0.157	150	0.0500	0.0160	W88
➢ **MDA1080-28N7**	2800	1080	85	2235	32000	0.782	0.157	150	0.0500	0.0160	W88
➢ **MDK1080-18N7**	1800	1080	85	2235	32000	0.782	0.157	150	0.0500	0.0160	W88
➢ **MDK1080-24N7**	2400	1080	85	2235	32000	0.782	0.157	150	0.0500	0.0160	W88
➢ **MDK1080-28N7**	2800	1080	85	2235	32000	0.782	0.157	150	0.0500	0.0160	W88

Outlines on pages O-01...O-29

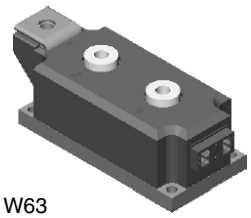

W63

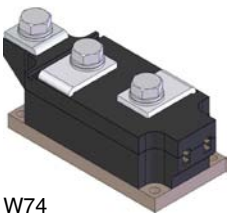

W74

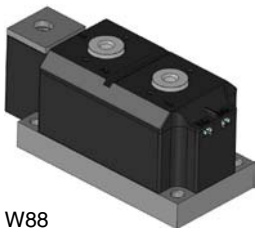

W88

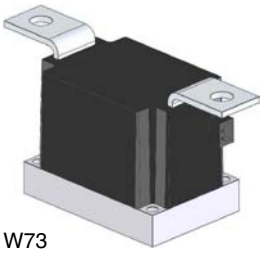

W73

Single Diode Modules

IXYS UK Westcode Ltd. has UL Certification for most modules (Underwriters Laboratories Inc).

Part No. ➢ New	V_{RRM} V	I_{FAV} A	@ T_C °C	I_{FRMS} A	I_{FSM} 150°C 10 ms A	V_{T0} V	r_T mΩ	T_{VJM} °C	R_{thJC} per die K/W	R_{thCK} per die K/W	Fig. No.
➢ **MDO1201-14N1**	1400	1520	85	3665	36000	0.800	0.100	160	0.0420	0.0100	W73
➢ **MDO1201-18N1**	1800	1520	85	3665	36000	0.800	0.100	160	0.0420	0.0100	W73
➢ **MDO1201-22N1**	2200	1520	85	3665	36000	0.800	0.100	160	0.0420	0.0100	W73

Water Cooled Dual Diode Modules

IXYS UK's range of water cooled modules feature a direct cooled base, with no extra interface to the die allowing for more efficient cooling giving an enhanced average current rating.

IXYS UK Westcode Ltd has UL Certification for most modules (Underwriters Laboratories Inc).
See the UL Listing.

Part No.	V_{RRM} V	I_{FAV} A	@ T_C °C	I_{FRMS} A	I_{FSM} 150°C 10ms A	V_{T0} V	r_T mΩ	T_{VJM} °C	R_{thJW} per die K/W	Fig. No.	Package style Outline drawings on page O-01...O-29
MDD950-14N1W	1400	950	45	1773	21800	0.750	0.200	150	0.0900	W64	
MDD950-18N1W	1800	950	45	1773	21800	0.750	0.200	150	0.0900	W64	
MDD950-22N1W	2200	950	45	1773	21800	0.750	0.200	150	0.0900	W64	
MDA950-14N1W	1400	950	45	1773	21800	0.750	0.200	150	0.0900	W64	
MDA950-18N1W	1800	950	45	1773	21800	0.750	0.200	150	0.0900	W64	
MDA950-22N1W	2200	950	45	1773	21800	0.750	0.200	150	0.0900	W64	
MDK950-14N1W	1400	950	45	1773	21800	0.750	0.200	150	0.0900	W64	
MDK950-18N1W	1800	950	45	1773	21800	0.750	0.200	150	0.0900	W64	
MDK950-22N1W	2200	950	45	1773	21800	0.750	0.200	150	0.0900	W64	

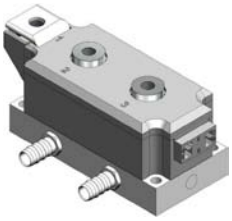

W64

Water Cooled Thyristor/Diode Modules

Part No.	V_{RRM} V_{DRM} V	I_{TAV} A	@ T_C °C	I_{TRMS} A	I_{TSM} 125°C 10ms A	V_{T0} V	r_T mΩ	T_{VJM} °C	R_{thJW} per die K/W	Fig. No.
MCD600-22io1W	2200	600	40	1116	16500	0.880	0.460	125	0.0900	W64
MDC600-22io1W	2200	600	40	1116	16500	0.880	0.460	125	0.0900	W64
MCD700-14io1W	1400	700	42	1331	16500	0.850	0.270	125	0.0900	W64
MCD700-18io1W	1800	700	42	1331	16500	0.850	0.270	125	0.0900	W64
MDC700-14io1W	1400	700	42	1331	16500	0.850	0.270	125	0.0900	W64
MDC700-18io1W	1800	700	42	1331	16500	0.850	0.270	125	0.0900	W64

Water Cooled Dual Thyristor Modules

Part No.	V_{RRM} V_{DRM} V	I_{TAV} A	@ T_C °C	I_{TRMS} A	I_{TSM} 125°C 10ms A	V_{T0} V	r_T mΩ	T_{VJM} °C	R_{thJW} per die K/W	Fig. No.
MCA600-22io1W	2200	600	40	1116	16500	0.880	0.460	125	0.0900	W64
MCC600-22io1W	2200	600	40	1116	16500	0.880	0.460	125	0.0900	W64
MCK600-22io1W	2200	600	40	1116	16500	0.880	0.460	125	0.0900	W64
MCC700-14io1W	1400	700	42	1331	16500	0.850	0.270	125	0.0900	W64
MCC700-18io1W	1800	700	42	1331	16500	0.850	0.270	125	0.0900	W64
MCA700-14io1W	1400	700	42	1331	16500	0.850	0.270	125	0.0900	W64
MCA700-18io1W	1800	700	42	1331	16500	0.850	0.270	125	0.0900	W64
MCK700-14io1W	1400	700	42	1331	16500	0.850	0.270	125	0.0900	W64
MCK700-18io1W	1800	700	42	1331	16500	0.850	0.270	125	0.0900	W64

Power Semiconductor Assemblies from IXYS UK

Power Semiconductor Assemblies

From discrete devices to complete assemblies, our customers can procure our products in whatever form suits their needs on a global basis. Supply management is critical to every manufacturer and reducing costs without compromising quality is essential. Our experienced, international, team of engineers is on hand to help our customers to get more from their products and keep at the forefront of technology in an increasingly competitive marketplace.

Standard Assemblies

We have a comprehensive range of standard assemblies for all of the common converter topologies utilising either natural air, forced air or liquid cooling. These well-proven designs provide an economical alternative to in house design and assembly of discrete parts. These assemblies are available on short lead-times to suit most common line voltages and current ratings from 35 A to 15 kA.

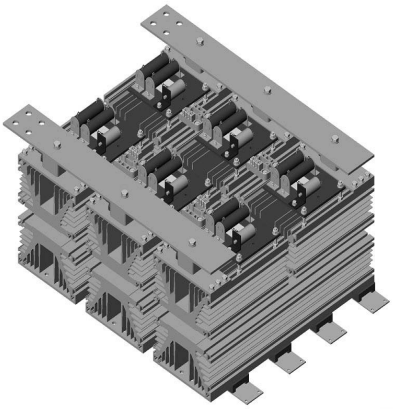

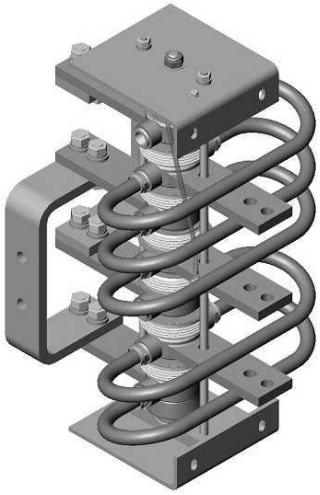

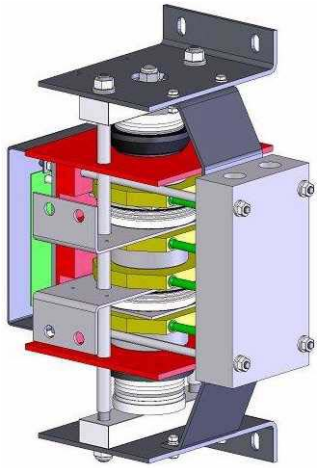

Custom Assemblies

With over 70 years of experience in power circuit design and manufacture, our dedicated team of design engineers can deliver customs solutions for a whole range of design problems ranging from simple crowbar applications to complicated multi-megawatt power converters. Utilising the latest 3D modeling techniques, we can reduce the cycle time from concept to manufacture and ensure successful system level integration into our customers equipment.

Pulsed Power

As a pioneer in the development of solid state pulsed power components and systems, we able to deliver anything from discrete components to fully integrated energy transfer switches. With systems successfully delivering voltage ratings of over 50 kV and pulsed currents to 140 kA, we have wealth of experience to put at your disposal. Our modular design solutions based on either pulse thyristor or press-pack IGBT technology and integrating control and protection functions provide you with a flexible “black box” approach to energy transfer problems.

We are involved with pulsed power on global basis, working with prestigious research organisations such as CERN, Switzerland as well as medium volume manufacture for emerging commercial applications such as laser supplies, PUV and PEF sterilisation, magnetisation and metal forming.

We have a philosophy of working closely with our customers to ensure that we deliver the right solution in the right time and right price – first time and every time.

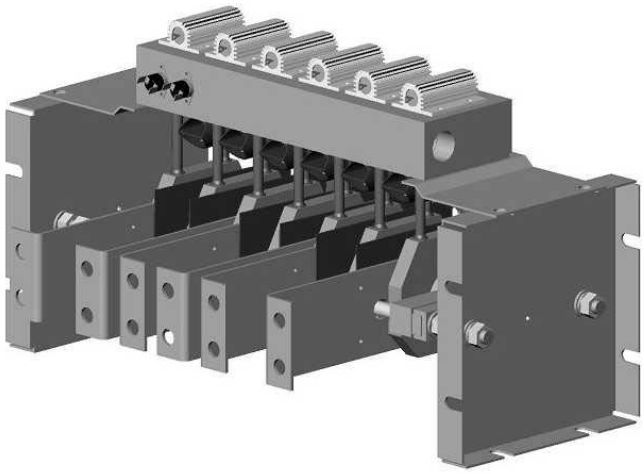

Power Semiconductor Assemblies

Transportation

We have a long association with the railway industry and over the years have gained an enviable reputation within railway industry as a solution provider. Using our experience and wide ranging contacts within the industry, we are able to offer assistance in tackling issues such as component obsolescence, improving power equipment reliability, contract maintenance of power modules, refurbishment of power electronics and upgrades to existing systems.

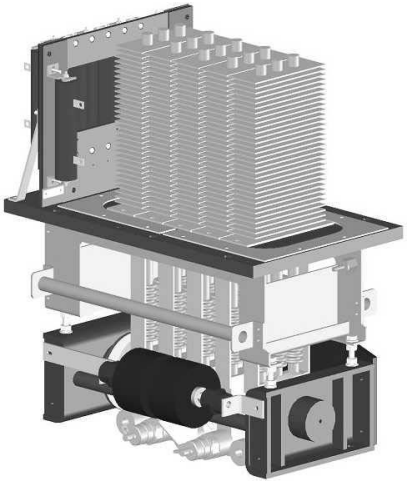

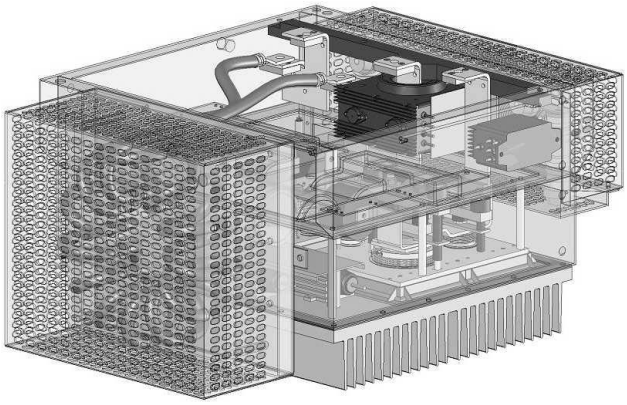

Working systematically to the highest international standards, we can give your equipment a new lease of life and help protect your investment in these valuable assets. For larger projects, such as fleet wide re-fits, we are able to work within a consortium of specialist companies to ensure that you have the right skills to hand to deliver a turnkey solution to your requirements.

Silicon Assemblies

A wide range of units is available, incorporating international standard outline silicon semiconductors. IXYS UK products have gained a worldwide reputation for quality in military, industrial and domestic applications.

Standard extruded aluminium heatsink profiles are used for mounting discrete semiconductor devices in various configurations, for example:

- Single-phase diode bridges with current ratings from 70 to 5170 Amps DC
- Single-phase half or fully controlled bridges from 35 to 2200 Amps DC
- Three-phase diode bridges with current ratings from 100 to 7190 Amps DC
- Three-phase half or fully controlled bridges from 45 to 3790 Amps DC
- Hexaphase single way diode assemblies from 200 to 14380 Amps DC
- Hexaphase single way Thyristor assemblies from 90 to 7580 Amps DC
- AC Regulators, single and three phase, from 40 to 2940 Amps RMS

Beyond Semiconductors

Our flexible manufacturing facility is able to readily adapt to our customers needs. In additional to power semiconductor assembly, we can offer complementary sub-assemblies to our customer's requirements, such as fuse panels and capacitor banks as well as contract manufacture to your designs.

Application and Engineering Support

Our highly experienced technical team is on hand to provide our customers with first class support for everything from the application of our range of discrete devices to the design and development of complex systems. We can help you from concept through design to manufacture and test, working closely with you at every step of the way.

Water Cooled AC Regulators

Included in our standard range are solid state, water cooled AC Regulators for resistance welding, with ratings from 315 to 3020 Amps RMS.

Also available are water cooled, single and three phase assemblies from 1200 to 6000 Amps DC.

All the above range is suitable for 440 V_{RMS} 50Hz mains operation.

Components

We offer a full portfolio of components which are complementary to our range of power semiconductors including:

Heatsinks Coolers Mounting Clamps
Ultra Rapid Semiconductor Protection Fuses
Capacitors for Power Electronics
Gate Drive Units

Westack - *Modular Solutions*

Single phase diode bridges — **Approx. total loss $2 \cdot I_{DC}$ @ 25°C**

Assembly Part Number	I_{DC} amps Air Forced 2.5m/s $T_a = 25°C$	$T_a = 35°C$	$T_a = 45°C$	I_{FSM} amps I_{TSM} amps	I^2t A^2s	Dimensions mm Fig.	W	H	D	Mass kg	Device Type and Quantity	Heat Sink Type
SXB1375B	1375	1303	1230	19500	1.9×10^6	1	382	325	405	20	W2058LC (4)	B(2x83,1x180)
SXB2096B	2096	1987	1874	33000	5.45×10^6	1	382	325	405	20	W3270NC (4)	B(2x83,1x180)
SXB3442B	3442	3277	3109	53000	13.5×10^6	2	382	593	405	40	W5696VC (4)	B(2x180)
SXB4264B	4264	4051	3835	72000	22.5×10^6	2	382	593	405	40	W8405ZC (4)	B(2x180)

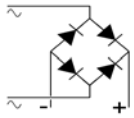

Three phase diode bridges — **Approx. total loss $2.5 \cdot I_{DC}$ @ 25°C**

Assembly Part Number	I_{DC} amps Air Forced 2.5m/s $T_a = 25°C$	$T_a = 35°C$	$T_a = 45°C$	I_{FSM} amps I_{TSM} amps	I^2t A^2s	Dimensions mm Fig.	W	H	D	Mass kg	Device Type and Quantity	Heat Sink Type
SXB1920G	1920	1822	1721	19500	1.9×10^6	3	548	325	405	30	W2058LC (6)	B(2x83,1x180)
SXB2939G	2939	2788	2634	33000	5.45×10^6	3	548	325	405	30	W3270NC (6)	B(2x83,1x180)
SXB4869G	4869	4640	4407	53000	13.5×10^6	4	548	593	405	60	W5696VC (6)	B(2x180)
SXB5993G	5993	5701	5402	72000	22.5×10^6	4	548	593	405	60	W8405ZC (6)	B(2x180)

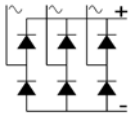

Six phase diode, single way with IPT — **Approx. total loss $1.25 \cdot I_{DC}$ @ 25°C**

Assembly Part Number	I_{DC} amps Air Forced 2.5m/s $T_a = 25°C$	$T_a = 35°C$	$T_a = 45°C$	I_{FSM} amps I_{TSM} amps	I^2t A^2s	Dimensions mm Fig.	W	H	D	Mass kg	Device Type and Quantity	Heat Sink Type
SXB3840HEX	3840	3644	3442	19500	1.9×10^6	5	548	325	395	30	W2058LC (6)	B(2x83,1x180)
SXB5877HEX	5877	5576	5268	33000	5.45×10^6	5	548	325	395	30	W3270NC (6)	B(2x83,1x180)
SXB9737HEX	9737	9281	8813	53000	13.5×10^6	6	548	593	395	60	W5696VC (6)	B(2x180)
SXB11987HEX	11987	11401	10804	72000	22.5×10^6	6	548	593	395	60	W8405ZC (6)	B(2x180)

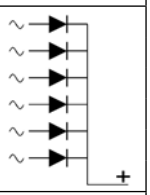

Six phase thyristor, single way with IPT — **Approx. total loss $1.5 \cdot I_{DC}$ @ 25°C**

Assembly Part Number	I_{DC} amps Air Forced 2.5m/s $T_a = 25°C$	$T_a = 35°C$	$T_a = 45°C$	I_{FSM} amps I_{TSM} amps	I^2t A^2s	Dimensions mm Fig.	W	H	D	Mass kg	Device Type and Quantity	Heat Sink Type
SXB2428HEXT	2428	2233	2030	15000	1.13×10^6	5	548	325	395	30	N1265LC (6)	B(2x83,1x180)
SXB3529HEXT	3529	3244	2949	29600	4.38×10^6	5	548	325	395	30	N1802LC (6)	B(2x83,1x180)
SXB4649HEXT	4649	4270	3878	37000	6.85×10^6	6	548	593	395	60	N2500VC (6)	B(2x180)
SXB6240HEXT	6240	5714	5173	64000	20.5×10^6	6	548	593	395	60	N4085ZC (6)	B(2x180)

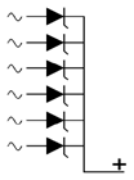

Single phase fully controlled bridges — **Approx. total loss $2.5 x I_{DC}$ @ 25°C**

Assembly Part Number	I_{DC} amps Air Forced 2.5m/s $T_a = 25°C$	$T_a = 35°C$	$T_a = 45°C$	I_{FSM} amps I_{TSM} amps	I^2t A^2s	Dimensions mm Fig.	W	H	D	Mass kg	Device Type and Quantity	Heat Sink Type
SXB868FB	868	797	724	15000	1.13×10^6	1	382	325	405	20	N1265NC (4)	B(2x83,1x180)
SXB1265FB	1265	1161	1054	29600	4.38×10^6	1	382	325	405	20	N1802NC (4)	B(2x83,1x180)
SXB1645FB	1645	1508	1367	37000	6.85×10^6	2	382	593	405	40	N2500VC (4)	B(2x180)
SXB2167FB	2167	1981	1790	64000	20.5×10^6	2	382	593	405	40	N4085ZC (4)	B(2x180)

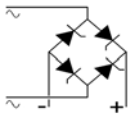

Three phase fully controlled bridges — **Approx. total loss $3 \cdot I_{DC}$ @ 25°C**

Assembly Part Number	I_{DC} amps Air Forced 2.5m/s $T_a = 25°C$	$T_a = 35°C$	$T_a = 45°C$	I_{FSM} amps I_{TSM} amps	I^2t A^2s	Dimensions mm Fig.	W	H	D	Mass kg	Device Type and Quantity	Heat Sink Type
SXB1214FG	1214	1116	1015	15000	1.13×10^6	3	548	325	405	30	N1265NC (6)	B(2x83,1x180)
SXB1764FG	1764	1622	1475	29600	4.38×10^6	3	548	325	405	30	N1802NC (6)	B(2x83,1x180)
SXB2324FG	2324	2135	1939	37000	6.85×10^6	4	548	593	405	60	N2500VC (6)	B(2x180)
SXB3120FG	3120	2857	2586	64000	20.5×10^6	4	548	593	405	60	N4085ZC (6)	B(2x180)

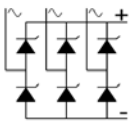

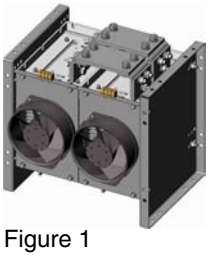

Figure 1

Figure 4

Figure 2

Figure 5

Figure 3

Figure 6

Westack - *Modular Solutions*

Cooling for each module section is provided by the use of a low noise 115/230 V ac fan which is protected against overloading by an integral thermal cut-out.

Surge suppression and fusing provides reliable and safe operation. Surge suppression (protecting the devices from voltage transients) and high speed fuses (to protect against short circuit) are available. Contact IXYS UK for details.

All plastic components are UL recognised and meet the requirements of the European Union Directive 2002/95/EC covering the restricted use of certain hazardous substances in electrical and electronic equipment.

ISO 9000 provides the standard against which all our products and services are measured.

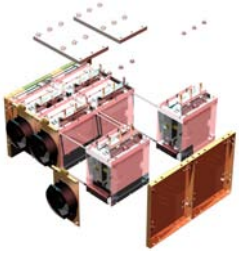

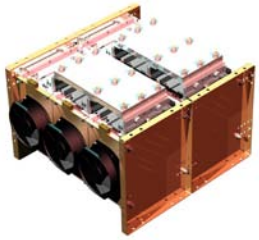

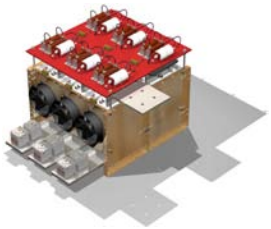

Westack - *Modular Solutions are available in 6 standard configurations, others by request.*

Figure 1
Weight 20 kg

Figure 2
Weight 40 kg

Figure 3
Weight 20 kg

Figure 4
Weight 60 kg

Figure 5
Weight 30 kg

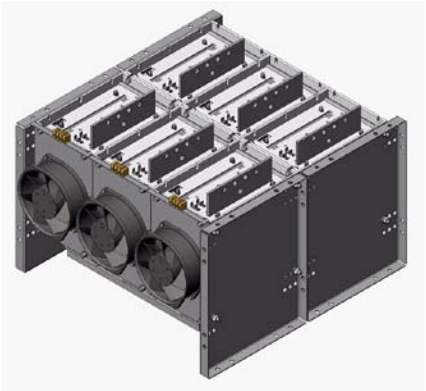

Figure 6
Weight 60 kg

Westack*LITE - Modular Solutions*

A simple but highly efficient range of stacks incorporating the new **WESPACK** range of phase control thyristors.

Currently available in 3 standard configurations:

AC voltage regulators

Single-phase bridges

Three-phase bridges

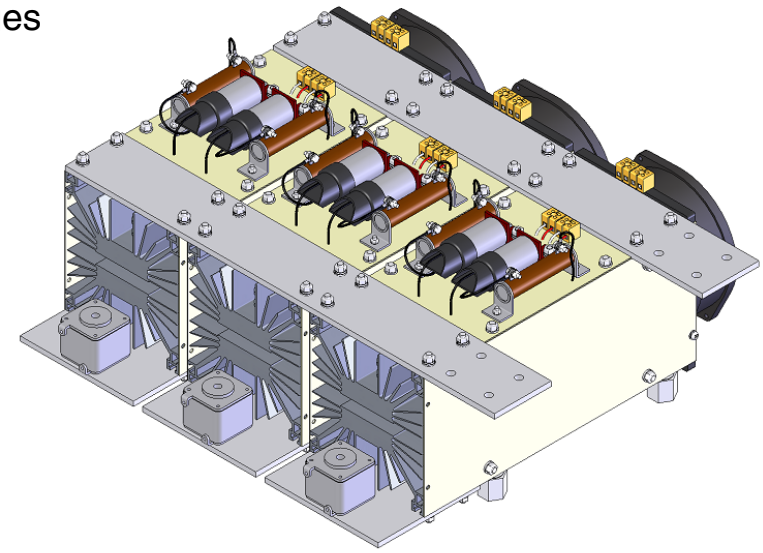

These stacks can easily be modified to meet individual customer requirements.

Fully dimensioned drawings are available upon request from the Chippenham Factory.

Features and Benefits

WESPACK devices provide the maximum power rating for weight and volume without compromising on quality and relaibilty.

Cooling is provided by means of a low noise dual voltage (230V/115V) ac fan that is protected against overloading by an integral thermal cut-out.

Surge suppression and fusing can be added to protect the devices from voltage transients and short circuits.

ISO 9000 2000 provides the standard against which all our products and services are measured.

AC regulators — **Approx. total loss $1.3 \cdot I_{RMS}$**

Assembly Part Number	I_{DC} amps Air Forced 5m/s $T_a = 25°C$	$T_a = 35°C$	$T_a = 45°C$	I_{FSM} amps I_{TSM} amps	I^2t A^2s	Dimensions mm Fig.	W	H	D	Mass kg	Device Type and Quantity	Heat Sink Type
SXC1195FR	1195	1098	997	19100	1.82×10^6	1	168	415	212	10	N1806QK (2)	(2x150, 1x330)
SXC1464FR	1464	1348	1227	32400	5.25×10^6	1	168	415	212	10	N2367MK (2)	(2x150, 1x330)
SXC1788FR	1788	1636	1480	50900	12.95×10^6	1	168	415	212	10	N3904HK (2)	(2x150, 1x330)

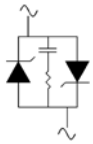

Single phase fully controlled bridges — **Approx. total loss $2.5 \cdot ID_{DC}$**

Assembly Part Number	I_{DC} amps Air Forced 2.5m/s $T_a = 25°C$	$T_a = 35°C$	$T_a = 45°C$	I_{FSM} amps I_{TSM} amps	I^2t A^2s	Dimensions mm Fig.	W	H	D	Mass kg	Device Type and Quantity	Heat Sink Type
SXC1076FB	1076	988	897	19100	1.82×10^6	2	330	415	212	20	N1806QK (4)	(2x150, 1x330)
SXC1318FB	1318	1213	1104	32400	5.25×10^6	2	330	415	212	20	N2367MK (4)	(2x150, 1x330)
SXC1609FB	1609	1473	1332	50900	12.95×10^6	2	330	415	212	20	N3904HK (4)	(2x150, 1x330)

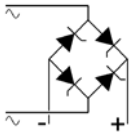

Three phase fully controlled bridges — **Approx. total loss $3 \cdot ID_{DC}$**

Assembly Part Number	I_{DC} amps Air Forced 2.5m/s $T_a = 25°C$	$T_a = 35°C$	$T_a = 45°C$	I_{FSM} amps I_{TSM} amps	I^2t A^2s	Dimensions mm Fig.	W	H	D	Mass kg	Device Type and Quantity	Heat Sink Type
SXC1517FG	1517	1396	1270	19100	1.82 x 106	3	492	415	212	30	N1806QK (6)	(2x150, 1x330)
SXC1871FG	1871	1725	1573	32400	5.25 x 106	3	492	415	212	30	N2367MK (6)	(2x150, 1x330)
SXC2319FG	2319	2125	1926	50900	12.95 x 106	3	492	415	212	30	N3904HK (6)	(2x150, 1x330)

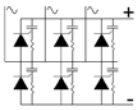

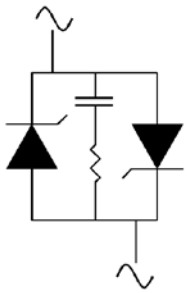

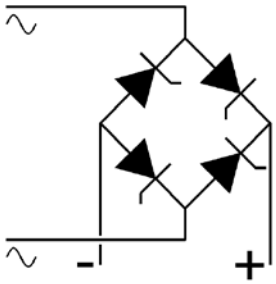

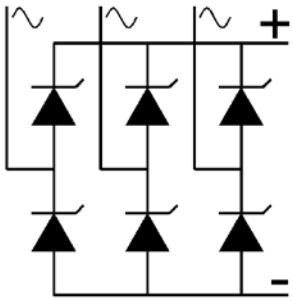

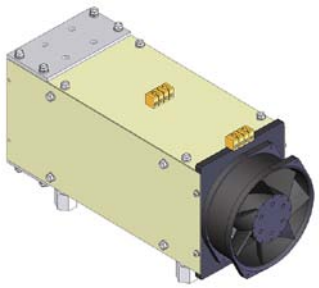

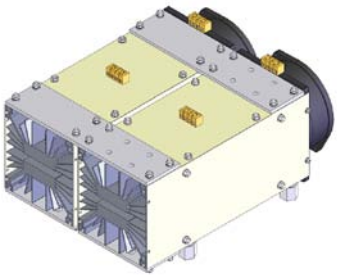

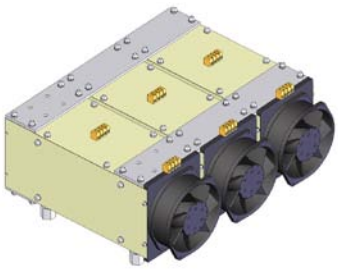

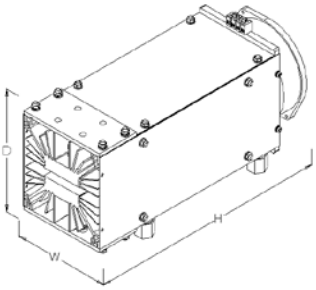

Figure 1
Weight 10 kg

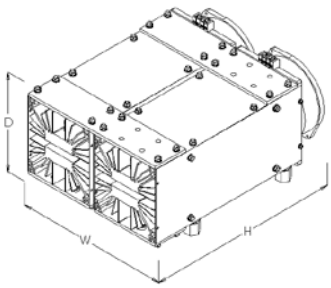

Figure 2
Weight 20 kg

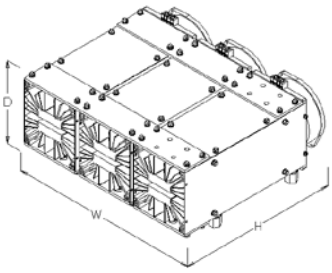

Figure 3
Weight 30 kg

Power Semiconductor Accessories

As part of our continuing commitment to meet our customers' demands, we offer a range of products to support our high power semiconductor devices and our silicon assembly business.

The following pages show a selection of accessories available to our customers, from heatsinks and coolers, to bar or box clamps, to mounting grease!

Part number	Old Part Number	Accessory
XSGSCX13	C7149	Press Pack Semiconductor Mounting Grease - supplied in 1kg tins
XST1000M08P	PTFE1000M8	M8 PTFE tube x 1m length insulation
XST1000M10P	PTFE1000M10	M10 PTFE tube x 1m length insulation
XST1000M12P	PTFE1000M12	M12 PTFE tube x 1m length insulation
XST1000M16P	PTFE1000M16	M16 PTFE tube x 1m length insulation
L0001YC600XXX	n/a	30mm diameter poleface Insulator Capsule
L0001QC600XXX	n/a	38mm diameter poleface Insulator Capsule
L0001NC600XXX	n/a	47mm diameter poleface Insulator Capsule
L0001HC600XXX	n/a	66mm diameter poleface Insulator Capsule
L0001ZF600XXX	n/a	73mm diameter poleface Insulator Capsule
L0001TC600XXX	n/a	75mm diameter poleface Insulator Capsule

Part number	Old Part Number	Accessory	Type
XSL200D8WRC	U9948	200mm long single Co-Axial cable, Red / White, M5 ring terminal for Ø75 IGBT & below	IGBT
XSL200D8WRCP	U9947	200mm long double Co-Axial cable, Red / White, M5 ring terminal for Ø85 IGBT & above	IGBT
XSL220C2WRT		220mm long twisted pair, Silicone sleeve cable 16/0.2, Red / White, M4 ring terminal	Thyristor
XSL300C2WRP	U9900	300mm long pair, Silicone sleeve cable 16/0.2, Red / White, M4 ring terminal	Thyristor
XSL300C2WS	U9900 (Gate Only)	300mm long gate wire, Silicone sleeve cable 16/0.2, White, M4 ring terminal	Thyristor
XSL350C2WRP	U9723	350mm long pair, Silicone sleeve cable 16/0.2, Red / White, M4 ring terminal	Thyristor
XSL400C2WRP	U9860	400mm long pair, Silicone sleeve cable 16/0.2, Red / White, M4 ring terminal	Thyristor
XSL500C2WRP	U9855	500mm long pair, Silicone sleeve cable 16/0.2, Red / White, M4 ring terminal	Thyristor
XSL600C2WRP	U9775	600mm long pair, Silicone sleeve cable 16/0.2, Red / White, M4 ring terminal	Thyristor
XSL1000C2WRP	U9734/U9801/U9849	1000mm long pair, Silicone sleeve cable 16/0.2, Red / White, M4 ring terminal	Thyristor
XSL1000C2WRT	U9952	1000mm long twisted pair, Silicone sleeve cable 16/0.2, Red / White, M4 ring terminal	Thyristor
XSL1100C2WRT	U9779	1100mm long twisted pair, Silicone sleeve cable 16/0.2, Red / White, M4 ring terminal	Thyristor

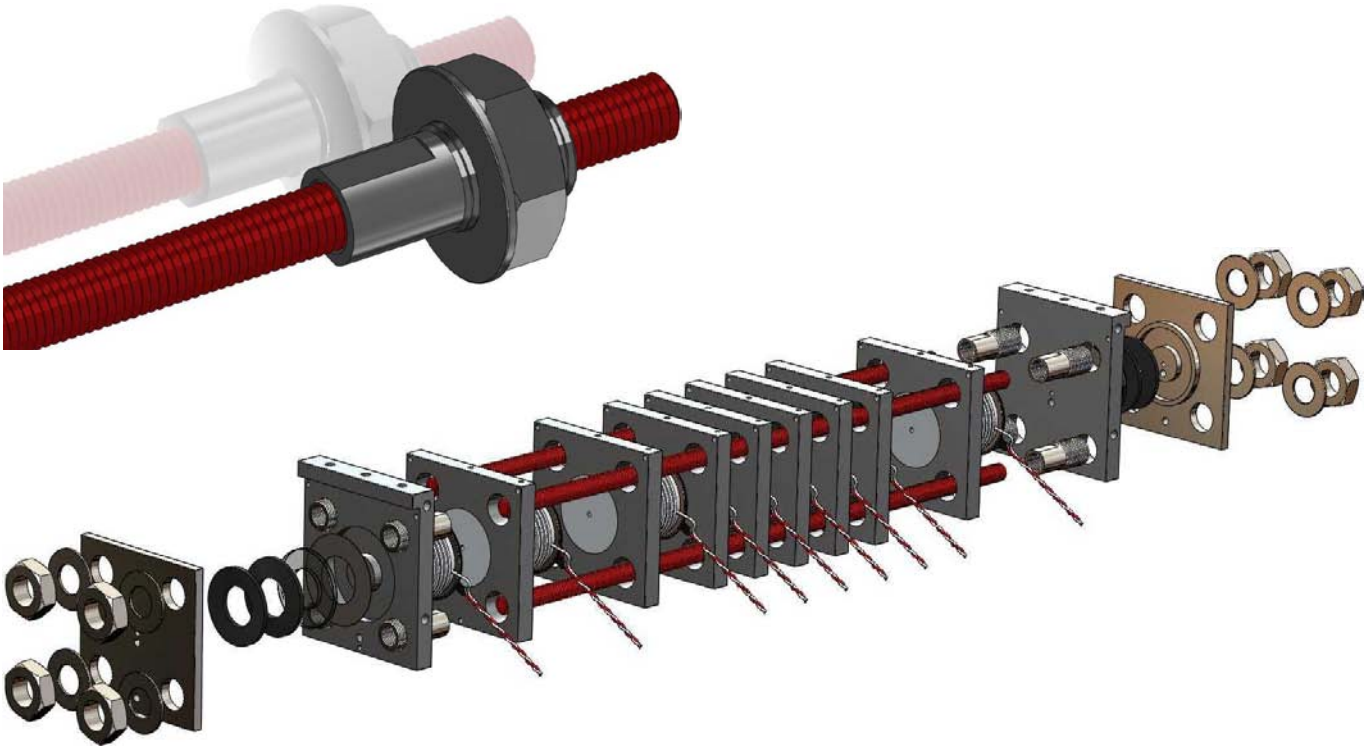

We can supply discrete parts, kits of parts or complete assemblies to satisfy your requirements.

Please contact the Chippenham Factory for further information.

Standard Bar Clamps

Part Number ○ Not for new design *	Fixing Centres mm	Rod Size	Capsule Device Outline	Mounting Surface Diameter mm	Nominal Thickness mm	$T_{j\ Max}$ °C	Outline No.
XK0450DA056M	65	M8	DO-200AA / TO-200AB	19.0	13.8	190	WC2
XK0450DT056M							WC3
XK0450SA056M							WC1
XK0550DA056M	65	M8	GTO	29.5	16.0	190	WC5
XK0550SA056M							WC4
○ XK0900DA056M	65	M8	Diode / Thyristor	25.1	14.6	190	WC7
○ XK0900DT056M							WC8
XK0900SA056M							WC6
XK0600DA074M	89	M10	Press-Pack IGBTs	47.0	27.0	190	WC10
XK0600SA074M							WC9
XK1000DA074M	89	M10	Press-Pack IGBTs	47.0	27.0	190	WC12
XK1000SA074M							WC11
XK1100DA076M	89	M10	DO-200AB / TO-200AC	34.0	26.2	190	WC13
XK1130DA076M	89	M10	DO-200AB / TO-200AC	34.0	26.2	190	WC15
XK1130DT076M							WC16
XK1130SA076M							WC14
XK1800DA076M	89	M10	Wespack PCT	38.0	14.0	190	WC18
XK1800DT076M							WC19
XK1800SA076M							WC17
XK2100DA076M	89	M10	GTO	47.0	27.0	190	WC21
XK2100DA076ML						125	
XK2100SA076M						190	WC20
XK2100SA076ML						125	
○ XK2140DA076M	89	M10	DO-200 / Thyristor	47.0	26.8	190	WC23
○ XK2140DA076ML						125	
○ XK2140DT076M						190	WC24
○ XK2140DT076ML						125	
XK2140SA076M						190	WC22
XK2140SA076ML						125	
XK2700DA076M	89	M10	Wespack PCT	50.0	14.0	190	WC26
XK2700DT076M							WC27
XK2700SA076M							WC25
XK2000DA114M	132	M12	Press-Pack IGBTs	75.0	26.0	190	WC29
XK2000SA114M							WC28
XK2500DA114M	132	M12	Press-Pack IGBTs	75.0	26.0	190	WC31
XK2500SA114M							WC30
XK2500DA116M	132	M12	GTO	63.0	26.0	190	WC33
XK2500DA116ML						125	
XK2500SA116M						190	WC32
XK2500SA116ML						125	
○ XK3000DA116M	132	M12	DO-200AD / Thyristor	63.0	33.0	190	WC35
○ XK3000DA116Mx						125	
XK3000SA116M						190	WC34
XK3000SA116ML						125	
XK3500DA116M	132	M12	GTO	75.0	26.0	190	WC37
XK3500DA116ML						125	
XK3500SA116M						190	WC36
XK3500SA116ML						125	
○ XK4000DA116M	132	M12	Diode / Thyristor	73.0	36.8	190	WC39
○ XK4000DA116ML						125	
XK4000SA116M						190	WC39
XK4000SA116ML						125	

Standard Bar Clamps

Part Number ○ Not for new design *	Fixing Centres mm	Rod Size	Capsule Device Outline	Mounting Surface Diameter mm	Nominal Thickness mm	$T_{j\,Max}$ °C	Outline Ref.
XK5000DA128M **XK5000DA128ML**	146	M16	GTO	75.0	26.0	190 125	WC40
XK7000DA128M **XK7000DA128ML**	146	M16	Diode / Thyristor	75.0	26.6	190 125	WC41
XK3060DA140ML **XK3060SA140ML**	154	M12	Press-Pack IGBTs	85.1	26.0	125	WC43 WC42
XK9000SA160M **XK9000SA160ML**	180	M16	Thyristor	99.3	35.8	190 125	WC44
XK9000DA160M **XK9000DA160ML**	180	M16	Thyristor	99.3	35.8	190 125	WC45
XK6120DA180ML **XK6120SA180ML**	196	M16	Press-Pack IGBTs	125.0	26.0	125	WC46 WC47

* For new replacement part see page 150

Outline drawings are available from pages O-01...O-29

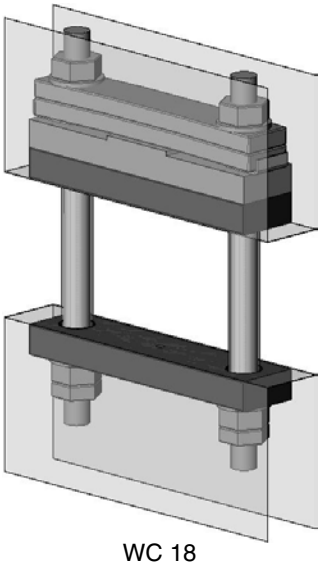

WC 18

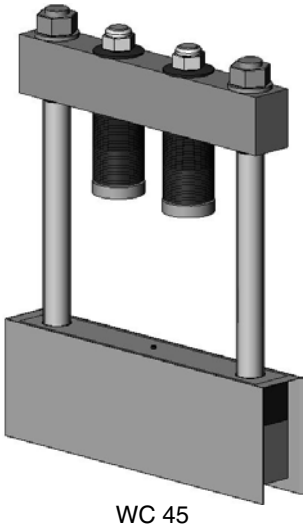

WC 45

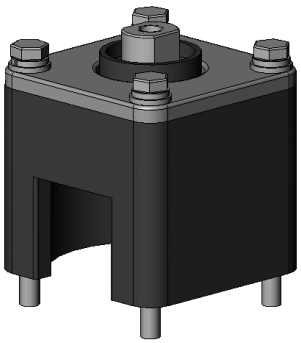

WC 50

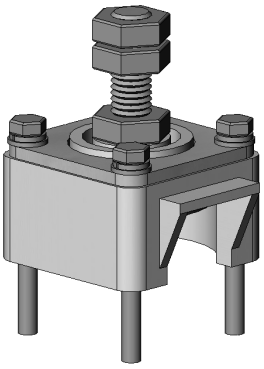

WC 48/49

Bar Clamps - new range!

Range	Part number	#### = Force kgf	Max cell dia mm	T_{JMAX} °C	xxx = max Z - dim range mm	Outline
XSK042	XSK####DA042Mxxx	0500/0900	42	190	025-076*	WC58
	XSK####DT042Mxxx	0500/0900	42	190	025-076*	WC59
	XSK####DF042Mxxx	0500/0900	42	190	025-076*	WC60
XSK054	XSK####DA054Mxxx	0900	54	190	025-076*	WC58
	XSK####DT054Mxxx	0900	54	190	025-076*	WC59
	XSK####DF054Mxxx	0900	54	190	025-076*	WC60
XSK056	XSK####DA056Mxxx	0500/0900/1500	56	190	038-120*	WC58
	XSK####DT056Mxxx	0500/0900/1500	56	190	038-120*	WC59
	XSK####DF056Mxxx	0500/0900/1500	56	190	038-120*	WC60
XSK065	XSK####DA065Mxxx	0500/0900/1500	65	190	038-120*	WC58
	XSK####DT065Mxxx	0500/0900/1500	65	190	038-120*	WC59
	XSK####DF065Mxxx	0500/0900/1500	65	190	038-120*	WC60
XSK075	XSK####DA075Mxxx	0900/1500/2200	75	190	038-120*	WC58
	XSK####DT075Mxxx	0900/1500/2200	75	190	038-120*	WC59
	XSK####DF075Mxxx	0900/1500/2200	75	190	038-120*	WC60
XSK087	XSK####DA087Mxxx	1500/2200/3000	87	190	038-120*	WC61
	XSK####DT087Mxxx	1500/2200/3000	87	190	038-120*	WC62
	XSK####DF087Mxxx	1500/2200/3000	87	190	038-120*	WC63
XSK103	XSK####DA103Mxxx	2200/3200/4000	103	190	038-120*	WC61
	XSK####DF103Mxxx	2200/3200/4000	103	190	038-120*	WC63
XSK112	XSK####DA112Mxxx	2800/3200/3800/4500	112	190	038-120*	WC61
	XSK####DF112Mxxx	2800/3200/3800/4500	112	190	038-120*	WC63
XSK120	XSK####DA120Mxxx	3800/4500/5000	120	190	050-120*	WC61
	XSK####DF120Mxxx	3800/4500/5000	120	190	050-120*	WC63
XSK126	XSK####DA126Mxxx	3800/4500/5000	126	190	050-120*	WC61
	XSK####DF126Mxxx	3800/4500/5000	126	190	050-120*	WC63

* contact factory for available sizes

WC 58

Outline drawings
on O-01...O-29

WC 59

WC 60

WC 61

WC 62

WC 63

Range	A	A1	B	C	C1	D	E	F	G	H	Fixing
XSK042	69.85	74.89	54.00	15.88	21.04	42.00	8.64	PCF	PCF	12.70	M6
XSK054	82.55	86.04	65.00	15.88	21.04	54.00	8.62	34.93	PCF	12.70	M6
XSK056	95.25	-	70.00	25.40	-	56.00	12.19	PCF	PCF	9.53	M8
XSK065	104.39	-	79.00	25.40	-	65.00	12.19	PCF	PCF	12.70	M8
XSK075	112.78	-	89.00	25.40	-	75.00	12.19	PCF	PCF	12.70	M8
XSK087	127.00	-	102.00	25.40	-	87.00	12.19	PCF	PCF	19.05	M8
XSK103	144.78	154.11	118.00	25.40	36.00	103.00	PCF	PCF	PCF	19.05	M8
XSK112	165.02	-	132.00	25.40	36.00	112.00	16.56	PCF	PCF	25.40	M10
XSK120	172.72	-	140.00	25.40	36.00	120.00	16.56	PCF	PCF	25.40	M10
XSK126	181.10	-	146.00	25.40	36.00	126.00	16.56	PCF	PCF	25.40	M10

PCF = Dimension is dependent on clamp force and cell height. Please consult factory
All dimensions above in mm and relate to outline drawing notation

Bar Clamps for **WESPACK™** *and GTO range*

Part number	Rod Size & Length mm	Insulator Size & Length mm	Fixing centres	Pole Face	Clamp Forces	„Z“ mm	„D“ mm	Fig. No.
XSK1500DA076038	M8 x 90	M8 x 60	89	32	10kN to 20kN	38	27.5	WC51
XSK1500DA076076	M8 x 130	M8 x 95				76	62.5	
XSK1500DA076101	M8 x 160	M8 x 120				101	87.6	
XSK2000DA076038	M8 x 95	M8 x 60	89	38	13kN to 20kN	38	25.9	WC52
XSK2000DA076076	M8 x 130	M8 x 95				76	61.0	
XSK2000DA076101	M8 x 160	M8 x 120				101	85.9	
XSK3000DA076038	M8 x 100	M8 x 65	89	50	27kN to 34kN	38	26.2	WC53
XSK3000DA076076	M8 x 130	M8 x 100				76	56.1	
XSK3000DA076101	M8 x 160	M8 x 125				101	86.1	
XSK3400DA076038	M8 x 100	M8 x 65	89	50	25kN to 31kN	38	24.6	WC54
XSK3400DA076076	M8 x 140	M8 x 105				76	64.5	
XSK3400DA076101	M8 x 160	M8 x 130				101	89.7	
XSK3800DA116M076	M10 x 150	M12 x 100	132	66	32kN to 38kN	76	59.7	WC55
XSK3800DA116M101	M10 x 180	M12 x 125				101	84.6	
XSK4400DA116M076	M10 x 150	M12 x 105	132	68	36kN to 44kN	76	63.0	WC56
XSK4400DA116M101	M10 x 180	M12 x 130				101	87.9	
XSK6000DA116M076	M10 x 150	M12 x 105	132	75	50kN to 60kN	76	59.9	WC57
XSK6000DA116M101	M10 x 180	M12 x 130				101	84.8	

Note: 1 Kgf = 9.8 Newtons

T_{JMAX} = 190°C

Outline drawings are available from pages O-01...O-29

WC51

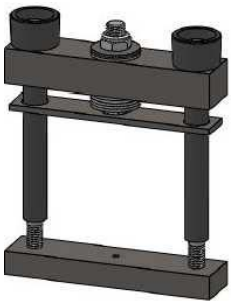

WC52

WC53

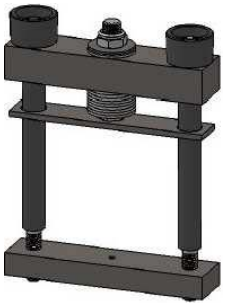

WC54

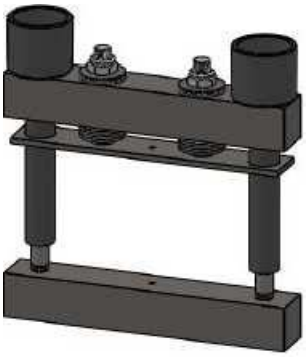

WC55

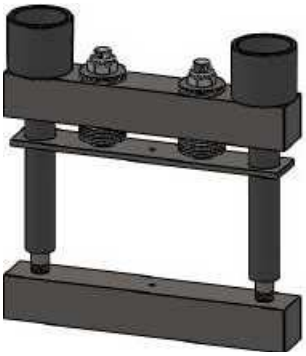

WC56

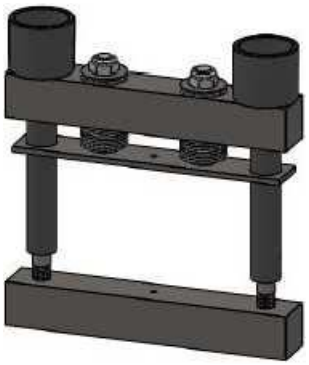

WC57

Box Clamps

Part Number	Moulded Box Style	Fixing Centres mm	Rod Size	Capsule Device Outline	Mounting Surface Ø mm	Nominal Thickness mm	Outline Ref.
XK0450BA019M	Injection	50 PCD	M5x50 Bolts	DO-200AA/TO-200AB	19.0	13.8	WC48
XK0450BB019M	Compression						
XK0450BA025M	Injection	50 PCD	M5x50 Bolts	DO-200AA/TO-200AB	25.1	14.6	WC49
XK0450BB025M	Compression						
XK1500BA034M	Injection	70 PCD	M6x50 Bolts	DO-200AB/TO-200AC	34.0	26.2	WC50

Note: 1 Kgf = 9.8 Newtons

Outline drawings are available from pages O-01...O-29

WC 48/49

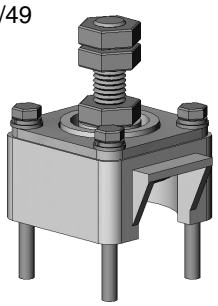

WC 50

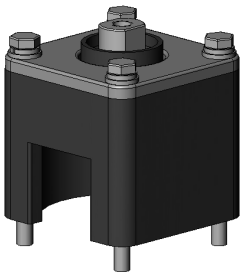

Heatsinks

Part No.	Weight Kg/m	Periphery mm	Area mm2	Fig. No.
XSFGxxxxAN	8.1	1059	2979	WH1
XSFGAxxxxAN	15.6	1682	5867	WH2
XSFHxxxxAN	12.7	1684	4655	WH3
XSFTxxxxAN	20	2065	7573	WH4
XSFTBxxxxAN	29	2467	10905	WH5
XSFTCxxxxAN	28	2544	10561	WH6
SXFLPxxxxAN	30	6620	11172	WH7
SXF46xxxxAN	20	2822	7411	WH8
SXF30xxxxAN	Dimensions 125mm x 125mm x 4 vanes			WH9

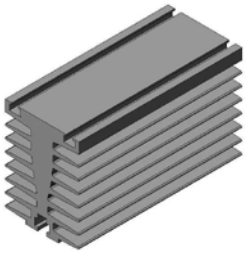

WH1

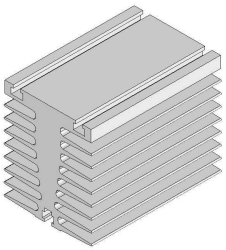

WH2

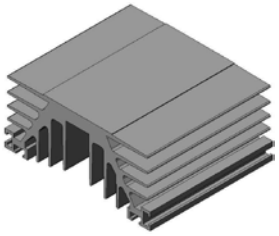

WH3

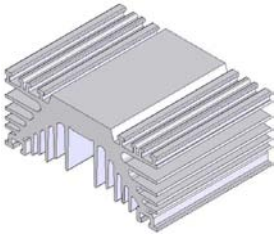

WH4

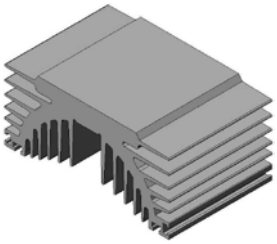

WH5

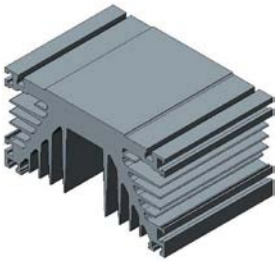

WH6

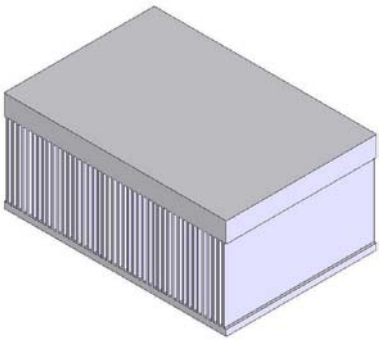

WH7

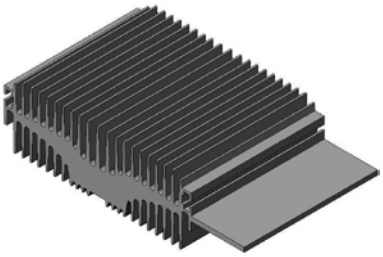

WH8

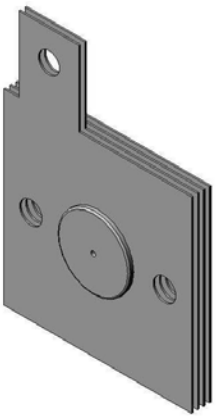

WH9

Coolers

Part Number New	Weight Kg	Cooler Thickness mm	Busbar Thickness mm	Description	Fig. No.
XW076NC16A	0.418	16	N/A	47mm WC Cu	WCL2
XW076NC16B	0.612	16	6.4	47mm WC Cu with Busbar (10mm Hose)	WCL1
XW076NC16BS				47mm WC Cu with Busbar + spirol pins fitted (10mm Hose)	WCL1
XW076NC16BT				47mm WC Cu with Busbar + thermostat hole (10mm Hose)	WCL1
XW076NC16C				47mm WC Cu with Busbar (1/2" Hose)	WCL1
XW076NC16CT				47mm WC Cu with Busbar + thermostat hole (1/2" Hose)	WCL1
XW076NC16R	0.581	16	6.35	47mm WC Cu reversed with Busbar	WCL12
XW076NC16W	0.400	16	N/A	47mm WC Cu reversed	WCL13
XW116ZC20A	1.300	20	N/A	73mm WC Cu	WCL4
XW116ZC20B	1.750	20	10	73mm WC Cu with Busbar	WCL3
XW116ZC20C	2.120	20	10	73mm WC Cu with alt. Busbar	WCL5
XW116ZC20R	1.672	20	10	73mm WC Cu reversed with Busbar	WCL14
XW116ZC20W	1.119	20	N/A	73mm WC Cu reversed	WCL15
XW127EN15A	0.375	15	N/A	85mm WC Al Nitride	WCL8
XW127EN15B				85mm WC Al Nitride without holes	WCL8
XW127EC25A	1.650	25	N/A	85mm WC Cu Helix	WCL16
XW127EC25B	2.200	25	8	85mm WC Cu with Busbar Helix	WCL17
XW127EA25A	0.500	25	N/A	85mm WC Al Helix	WCL16
XW127EA25B	0.650	25	8	85mm WC Al with Busbar Helix	WCL17
XW160FC25A	3.620	25	N/A	100mm WC Cu	WCL6
XW160FC25B	4.520	25	10	100mm WC Cu with Busbar	WCL7
XW180GC34A	4.920	34	N/A	125mm WC Cu Helix	WCL11
XW180GC34B	5.950	34	10	125mm WC Cu with Busbar Helix	WCL10
XW180GA34A	1.500	34	N/A	125mm WC Al Helix	WCL11
XW180GA34B	1.800	34	10	125mm WC Al with Busbar Helix	WCL10
XW180GN25A	0.920	25	N/A	125mm WC Al Nitride Helix	WCL18
XW270QA25A	2.941	25	n/a	270 x 190mm WC Al Cold Plate	WCL9

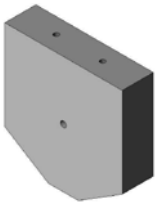
WCL2

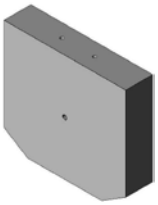
WCL4

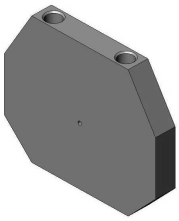
WCL8

Outlines on pages O-01...O-29

WCL1

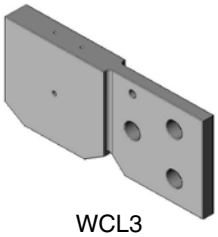
WCL3

WCL5

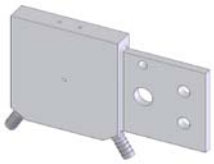
WCL6

WCL7

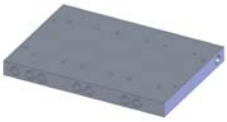
WCL9 -WS65

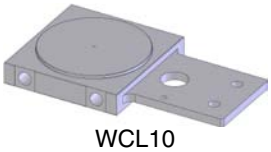
WCL10

WCL11

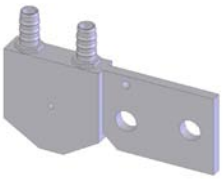
WCL12 -WS71-1

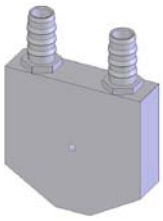
WCL13 -WS71-2

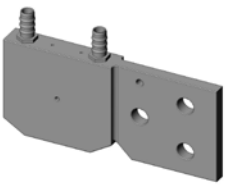
WCL14 -WS72-1

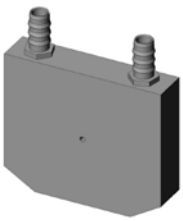
WCL15 -WS72-2

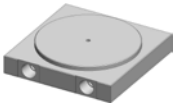
WCL16

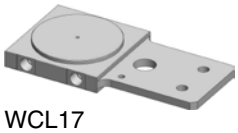
WCL17

WCL18

Part No.	Cooler Accessories
XSNM12H10S	M12 Cooler Connection, 10mm Hose & Stainless Steel material
XSNM12H12S	M12 Cooler Connection, 12mm Hose & Stainless Steel material
XSNM10H15P	M10 Cooler Connection, 15mm Hose & Plastic Material

Snubber Capacitors - New Range

A new addition for 2013, IXYS UK's new range of snubber capacitors. These capacitors have a low series resistance,high pulse strength and low self-inductance of 15nH; they also have very good self-healing characteristics without loss of capacitance. These capacitors consist of a flame retardent plastic can filled with solid resin to ensure reliable operation even under the most extreme environmental conditions.

Part No.	Capacitance CN µF	Series Resistance ESR mΩ	RMS Current I_{RMS} A	Peak Current I_{PK} kA	Peak Surge Current I_S kA	DC Voltage V_{DC} V	AC Voltage V_{AC} V	Non-repetitive Surge voltage V_S V	Fig.	Diameter D1 mm	Length L1 mm
E53.H59-471T1W	0.47	2.90	20	0.70	2.10	3750	2100	5625	T1	55	59
E53.H59-102T1W	1.00	1.60	40	0.35	1.75	3200	1050	4800	T1	55	59
E53.H59-152T1W	1.50	2.40	32	0.27	1.35	2800	700	4200	T1	55	59
E53.H59-252T1W	2.50	1.80	40	0.37	1.10	2250	700	3375	T1	55	59
E53.M59-252T2W	2.50	0.65	75	0.90	4.50	3200	1050	4800	T2	75	59
E53.R11-302T2W	3.00	1.20	125	2.10	6.30	5000	2100	7500	T1	115	110
E53.H59-332T1W	3.30	1.60	40	0.42	1.20	2000	700	3000	T1	55	59
E53.M59-332T2W	3.30	1.10	60	0.60	3.00	2800	700	4200	T2	75	59
E53.P59-402T2W	4.00	0.50	80	1.50	7.50	3200	1050	4800	T2	95	59
E53.R11-402T2W	4.00	1.00	125	2.50	7.50	5000	2100	7500	T2	115	110
E53.H59-472T1W	4.70	1.10	45	0.50	1.60	1700	700	2550	T1	55	59
E53.Q59-502T2W	5.00	0.32	100	1.80	9.00	3200	1050	4800	T2	105	59
E53.M59-602T2W	6.00	0.75	70	0.88	2.60	2250	700	3375	T2	75	59
E53.Q59-602T2W	6.00	0.28	100	2.20	11.00	3200	1050	4800	T2	105	59
E53.P59-682T2W	6.80	0.55	80	1.20	6.00	2800	700	4200	T2	95	59
E53.R60-702T2W	7.00	0.25	100	3.00	12.00	3200	1050	4800	T2	115	60
E53.P59-752T2W	7.50	0.50	80	1.50	7.50	2800	700	4200	T2	95	59
E53.H59-802T1W	8.00	1.70	38	0.33	1.00	1400	350	2100	T1	55	59
E53.M59-802T2W	8.00	0.65	80	1.00	3.00	2000	700	3000	T2	75	59
E53.Q59-802T2W	8.00	0.45	100	1.50	7.50	2800	700	4200	T2	105	59
E53.M59-103T2W	10.00	0.52	80	1.10	3.50	1700	700	2550	T2	75	59
E53.P59-103T2W	10.00	0.46	80	1.50	4.50	2250	700	3375	T2	95	59
E53.Q59-103T2W	10.00	0.35	100	1.80	9.00	2800	700	4200	T2	105	59
E53.H59-123T1W	12.00	1.70	40	0.40	1.20	1100	350	1650	T1	55	59
E53.R60-123T2W	12.00	0.29	100	2.20	12.00	2800	700	4200	T2	115	60
E53.P59-143T2W	14.00	0.35	80	1.80	5.50	2000	700	3000	T2	95	59
E53.Q59-143T2W	14.00	0.33	100	2.00	6.00	2250	700	3375	T2	105	59
E53.H59-153T1W	15.00	1.10	40	0.50	1.50	1100	350	1650	T1	55	59
E53.Q59-153T2W	15.00	0.27	100	2.10	6.20	2250	700	3375	T2	105	59
E53.M59-163T2W	16.00	0.85	60	0.65	1.35	1400	350	2100	T2	75	59
E53.P59-163T2W	16.00	0.37	80	1.80	5.50	1700	700	2550	T2	95	59
E53.Q59-183T2W	18.00	0.26	100	2.30	6.90	2000	700	3000	T2	105	59
E53.R60-183T2W	18.00	0.25	100	2.60	10.00	2250	700	3375	T2	115	60
E53.Q59-223T2W	22.00	0.27	100	2.50	7.50	1700	700	2550	T2	105	59
E53.R60-243T2W	24.00	0.21	100	3.00	10.00	2000	700	3000	T2	115	60
E53.M59-253T2W	25.00	0.71	70	0.83	2.50	1100	350	1650	T2	75	59
E53.H59-303T1W	30.00	0.85	60	0.68	2.10	900	350	1350	T1	55	59
E53.N51-303H1W	30.00	1.30	60	1.30	3.90	1600	-	2400	H1	85	51
E53.P59-303T2W	30.00	0.46	80	1.20	3.70	1400	350	2100	T2	95	59
E53.H59-333T1W	33.00	0.95	55	0.68	2.10	700	350	1050	T1	55	59
E53.R60-333T2W	33.00	0.18	100	3.50	10.00	1700	700	2550	T2	115	60
E53.N51-383H1W	37.50	1.20	60	1.40	4.00	1400	-	2100	H1	85	51
E53.N68-403H1W	40.00	1.60	60	1.30	3.90	1600	-	2400	H1	85	68
E53.Q59-403T2W	40.00	0.34	100	1.70	5.10	1400	350	2100	T2	105	59
E53.H59-503T1W	50.00	0.80	60	0.83	2.50	550	280	825	T1	55	59
E53.N51-503H1W	50.00	1.10	70	1.60	4.80	1200	-	1800	H1	85	51
E53.N68-503H1W	50.00	1.50	60	1.40	4.20	1400	-	2100	H1	85	68
E53.P59-503T2W	50.00	0.34	80	1.70	5.00	1100	350	1650	T2	95	59
E53.R60-503T2W	50.00	0.27	100	2.20	10.00	1400	350	2100	T2	115	60

H1

T1/T2

Standard base clamp kits for rectifier diodes and phase control thyristors

These Single side cooled square base mounting clamps are suitable for 34 mm to 50 mm pole face devices with clamping force in the range from 1130 Kgf to 2140 Kgf. Suitable for devices with blocking voltages from 400 volts up to 6 KV.

Part No.	Poleface Ref.	Outline Ref.
XK1500CB034M †	34-38	WC64
XK1130SB076M	34-38	WC65
XK2140SB076M	47-50	WC66

Standard part replacements to the obsolete flat-base power silicon diodes types KBN/R, KCN/R & KDN/R. For other voltages and thyristor options please consult factory.

Part No.	Old square base part no.	Base polarity	V_{RRM} V	I_{tav} Tc = 100°C A	I_{TSM} kA	I^2t A^2s	V_0 V	r_T mΩ	R_{th} K/W	Temp °C	Outline
W1185LC450KBR †	SW45KBR515	Anode	4500	435	10.2	520 x 10^3	1.000	0.575	0.085	160	WC64
W1185LC450KBN †	SW45KBN515	Cathode	4500	380	10.2	520 x 10^3	1.000	0.575	0.101	160	WC64
W1411LC360KBR †	SW36KBR595	Anode	3600	505	12.2	744 x 10^3	0.900	0.388	0.085	160	WC64
W1411LC360KBN †	SW36KBN595	Cathode	3600	445	12.2	744 x 10^3	0.900	0.388	0.101	160	WC64
W1524LC300KBR †	SW30KBR636	Anode	3000	540	13.4	898 x 10^3	0.870	0.323	0.085	160	WC64
W1524LC300KBN †	SW30KBN636	Cathode	3000	470	13.4	898 x 10^3	0.870	0.323	0.101	160	WC64
W1748LC220KBR †	SW22KBR805	Anode	2200	660	13.5	911 x 10^3	0.870	0.280	0.085	175	WC64
W1748LC220KBN †	SW22KBN805	Cathode	2200	582	13.5	911 x 10^3	0.870	0.280	0.101	175	WC64
W2058LC120KBR †	SW12KBR935	Anode	1200	760	16.1	1.30 x 106	0.790	0.192	0.085	175	WC64
W2058LC120KBN †	SW12KBN935	Cathode	1200	665	16.1	1.30 x 106	0.790	0.192	0.101	175	WC64
W1185LC450KCR	SW38KBR515	Anode	4500	455	10.2	520 x 10^3	1.000	0.575	0.080	160	WC65
W1185LC450KCN	SW45KBN515	Cathode	4500	395	10.2	520 x 10^3	1.000	0.575	0.097	160	WC65
W1411LC360KCR	SW36KBR595	Anode	3600	530	13.2	756 x 10^3	0.900	0.388	0.080	160	WC65
W1411LC360KCN	SW36KBN595	Cathode	3600	460	12.3	759 x 10^3	0.900	0.388	0.097	160	WC65
W1524LC300KCR	SW30KBR635	Anode	3000	565	13.4	898 x 10^3	0.870	0.323	0.080	160	WC65
W1524LC300KCN	SW30KBN636	Cathode	3000	490	13.4	898 x 10^3	0.870	0.323	0.097	160	WC65
W1748LC220KCR	SW22KBR805	Anode	2200	690	13.5	911 x 10^3	0.870	0.280	0.080	175	WC65
W1748LC220KCN	SW22KBN805	Cathode	2200	600	13.5	911 x 10^3	0.870	0.280	0.097	175	WC65
W2058LC120KCR	SW12KBR935	Anode	1200	800	16.1	1.30 x 10^6	0.790	0.192	0.080	175	WC65
W2058LC120KCN	SW12KBN935	Cathode	1200	690	16.1	1.30 x 10^6	0.790	0.192	0.097	175	WC65
W3082MC45KDR	SB45KDR680	Anode	4500	1115	26.6	3.54 x 10^6	0.923	0.192	0.037	160	WC66
W3082MC45KDN	SB45KDN680	Cathode	4500	1030	26.6	3.54 x 10^6	0.923	0.192	0.041	160	WC66
W3708MC35KDR	SB35KDR820	Anode	3500	1240	33.7	5.68 x 10^6	0.958	0.112	0.037	160	WC66
W3708MC35KDN	SB35KDN820	Cathode	3500	1145	33.7	5.68 x 10^6	0.958	0.112	0.041	160	WC66
W3842MC28KDR	SB25KDR950	Anode	2800	1325	33.5	5.61 x 10^6	0.831	0.118	0.037	160	WC66
W3842MC28KDN	SB25KDN950	Cathode	2800	1225	33.5	5.61 x 10^6	0.831	0.118	0.041	160	WC66
W5636MC15KDR	SB15KDR14C	Anode	1500	2035	43.9	9.64 x 10^6	0.698	0.059	0.037	175	WC66
W5636MC15KDN	SB15KDN14C	Cathode	1500	1875	43.9	9.64 x 10^6	0.698	0.059	0.041	175	WC66

† - Assembly supplied either as kit of parts or sub-assembly with selected diode or thyristor

WC64

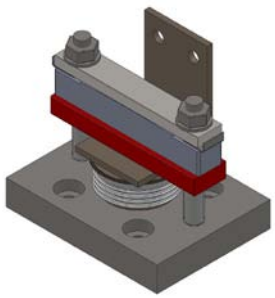

WC65

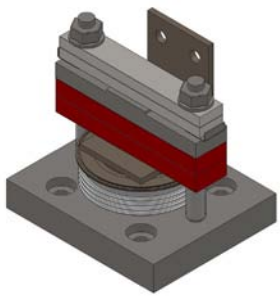

WC66

Power Semiconductor Chips

IXYS offers a wide range of dice for a multitude of applications.

Bipolar Chips	V_{RRM} / V_{DRM}	$I_{F(AV)M}$ / $I_{T(AV)M}$	t_{rr}
Schottky Diodes	8 - 200 V	5 - 300 A	-
HiPerFRED™ (Low Leakage)	200 - 1200 V	10 - 150 A	30 - 40 ns
Sonic™ Fast Recovery Diodes	600 - 1800 V	5 - 150 A	30 - 60 ns
FRED™ (Low Forward Voltage Drop)	200 - 1200 V	10 - 150 A	40 - 60 ns
Semi-Fast Diodes	1200 - 1600 V	15 - 60 A	60 - 100 ns
Rectifier Diodes	1200 - 2200 V	10 - 400 A	-
Phase Control Thyristors	800 - 2200 V	5 - 300 A	-

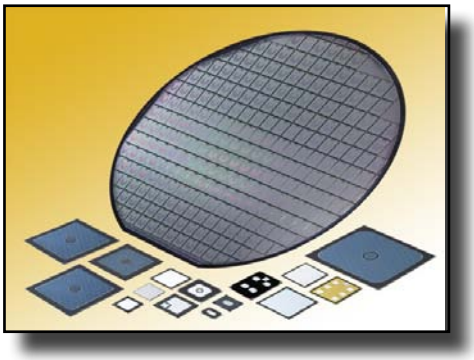

The most important features of planar technology are:

- no PN junction termination in the underside or to the edges; thus non-critical handling and simplified mounting
- fabricated using isolation diffusion with guard rings, channel stoppers and thick glass passivation to assure high electrical reliability and stability
- important electrical parameters 100% tested on the chips
- thyristor chips with center or corner gate construction
- chips with solderable or bondable metallization
- standard 125 mm (5 inch) and 150 mm (6 inch) diameter wafers

IXYS can ship chips as follows:

- Chips in wafer form, unsawed, electrically tested, rejects are inked
- Chips in sawed wafer on foil, electrically tested, rejects are inked
- Chips in tray (Waffle Pack), electrically tested

Direct Copper Bonded Ceramic Substrates

DCB Ceramic Substrates (Al_2O_3)

IXYS manufactures Direct Copper Bonded substrates on aluminum oxide (Al_2O_3) base.
DCB ceramic substrates form the basis for new product ideas and electronic developments with a high degree of integration.

Standard bonded DCB panel dimensions are:

Unclad aluminum oxide ceramic			
Al_2O_3 content		> 96	%
dimensions		138x210, 138x190.5, 115x165*	mm
usable area	max.	130x200, 130x180, 107x156*	mm
thickness		1.00, 0.63, 0.38, 0.25	mm
arc through voltage		10	kV
thermal conductivity		> 24	W/m · K
Conduction layers - both sides			
copper thickness		0.3 (< 0.3 on request)	mm
conductor width	min.	0.3 + / - 0.2	mm
conductor spacing	min.	0.4 + / - 0.2	mm
spacing conductor/edge of ceramic	min.	0.35 + / - 0.2	mm
surface finishes available		bare copper; nickel plated; nickel + gold plated	
peel-off resistance (90° peel test)		>6	N/mm
DCB ceramic substrate			
application temperature range		-55...+850	°C
resistant to hydrogen	max. up	400	°C
thermal expansion coefficient	to typ.	7.4 x 10-6	K-1
customer specific dimensions			

* = (for 0.25 mm thk.)

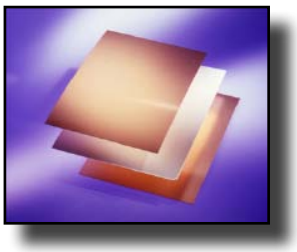

Patterned DCB substrates can be manufactured to customers‘ drawings.

DCB ceramic substrates fulfill several functions:

- carriers for semiconductor chips and connection clips
- circuits similar to that on a PC board
- electrical isolator for separating „current paths“ from „heat paths“
- transfer medium for heat dissipation from active parts into heat sink

DCB parts are available as:

- bonded plate
- bonded and patterned plate
- prelasered, unbroken plate
- individuale substrates

Outline drawings

IXYS UK WESTCODE

Dimensions in mm and inches (1 mm = 0.0394“)

W1 - 100A241

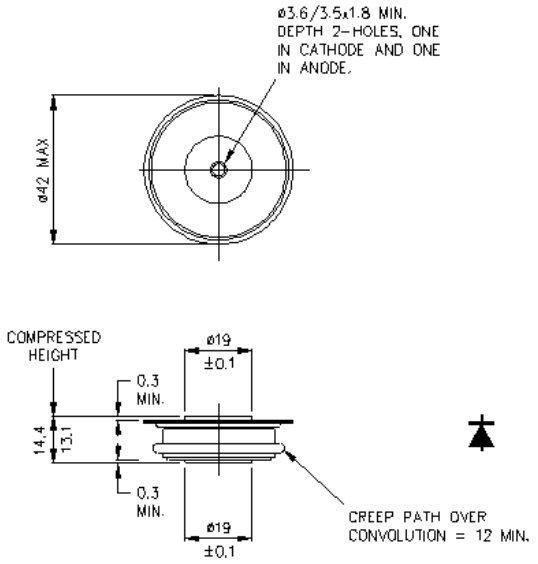

W2 - 100A291

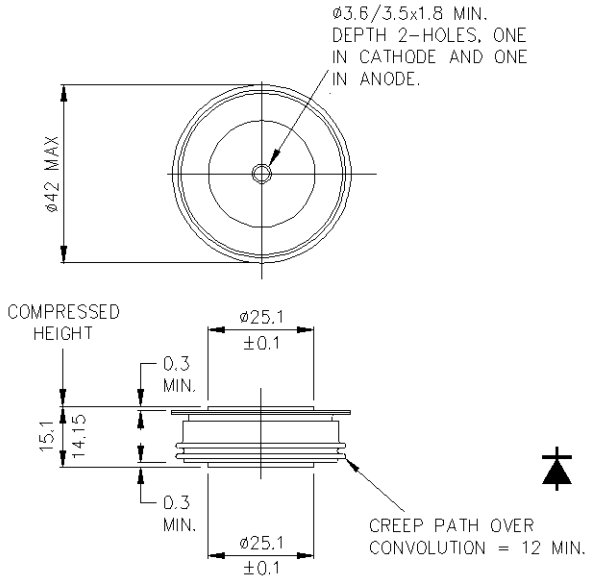

W3 - 100A317

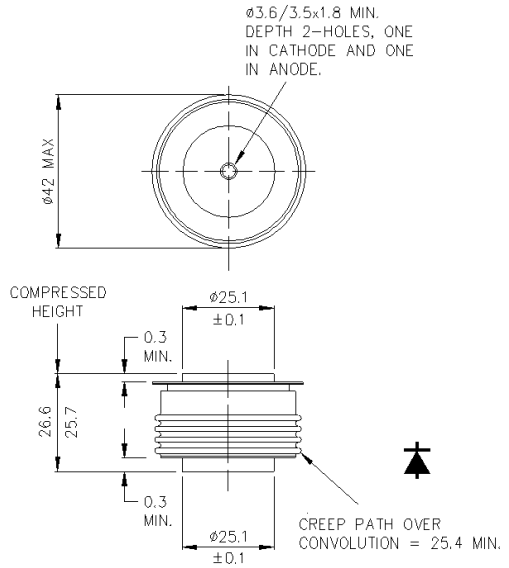

W4 - 100A243

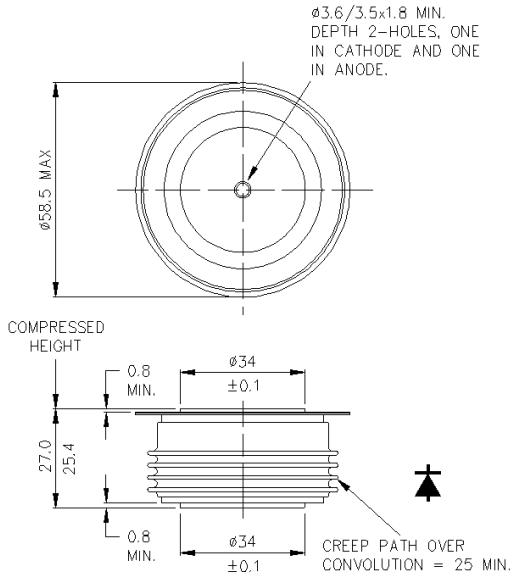

W5 - 100A249

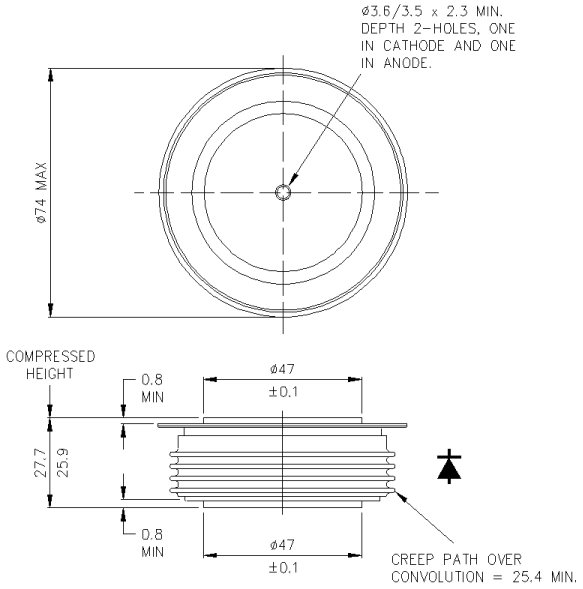

W6 - 100A270

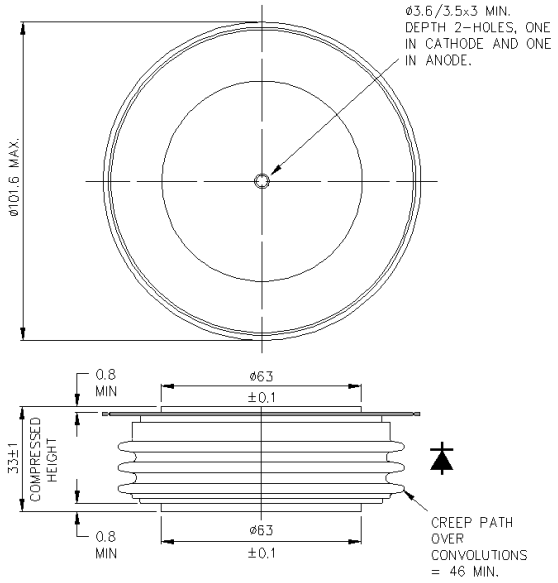

IXYS UK WESTCODE

Dimensions in mm and inches (1 mm = 0.0394“)

W7 - 100A293

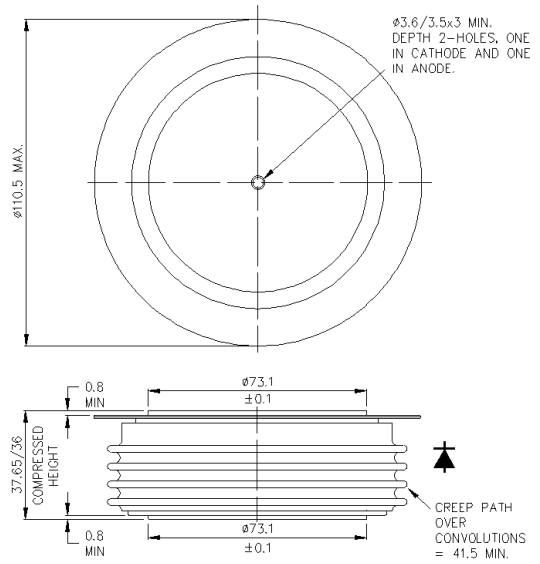

W8 - 101A212

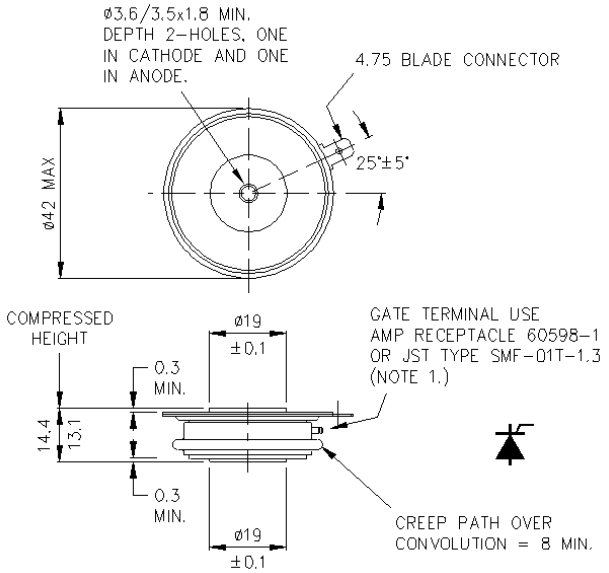

W9 - 101A335

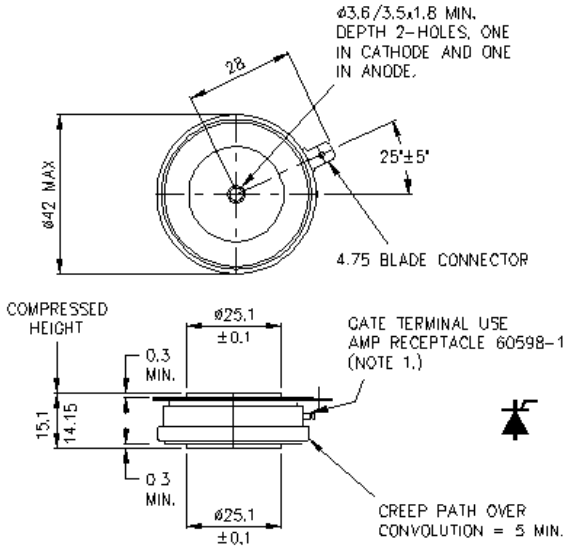

W10 - 101A216

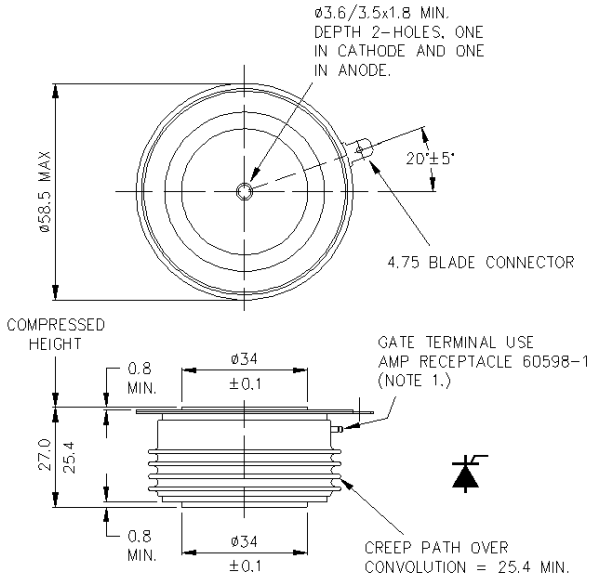

W11 - 101A223

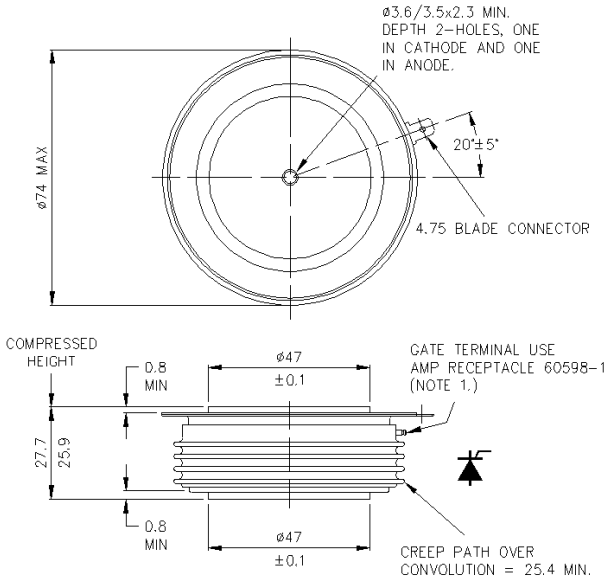

W12 - 101A232

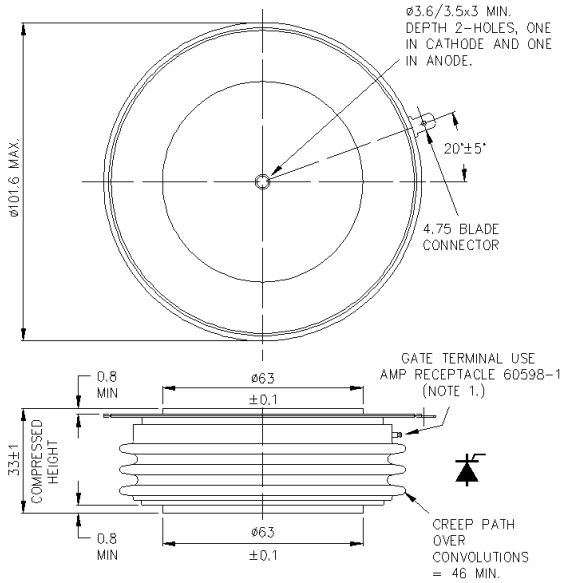

Outline drawings

IXYS UK WESTCODE

Dimensions in mm and inches (1 mm = 0.0394“)

W13 - 101A281

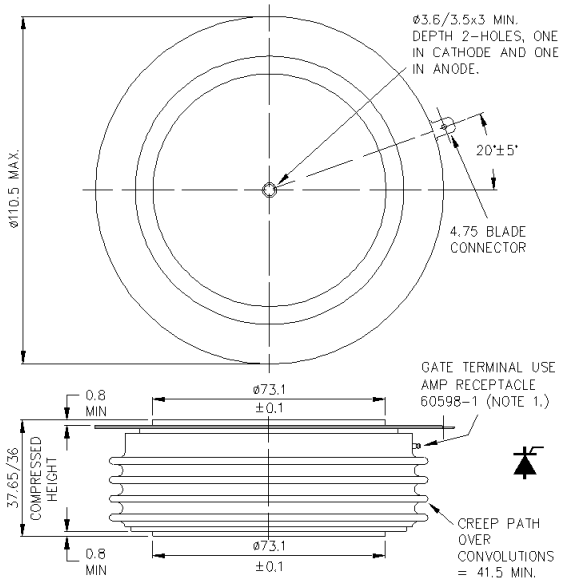

W14 - 101A325

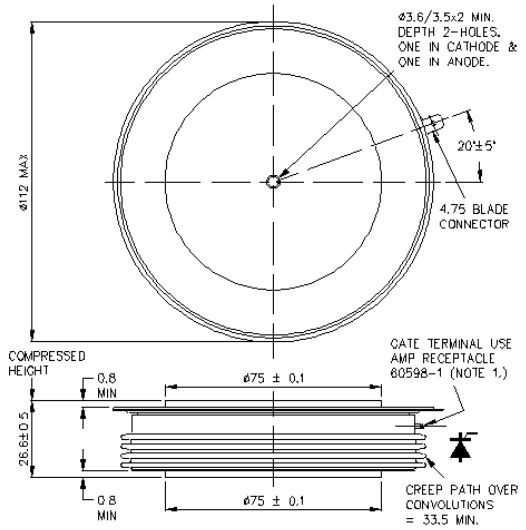

W15 - 101A322

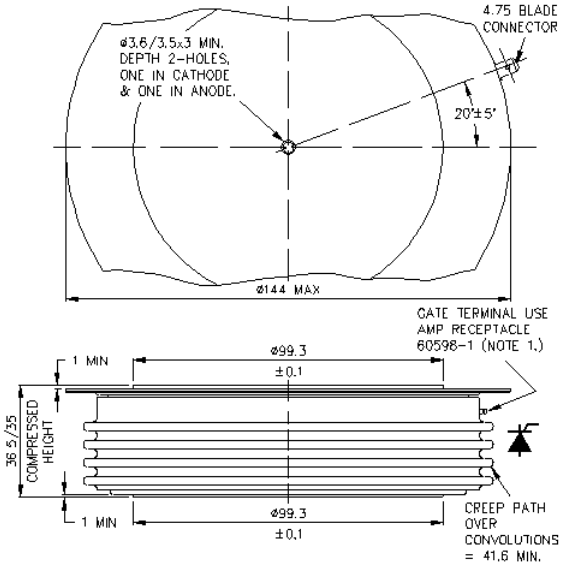

W16 - 101A235

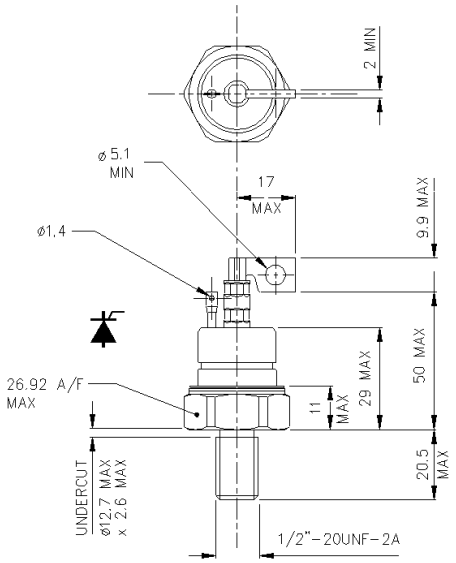

W17 - 101A231

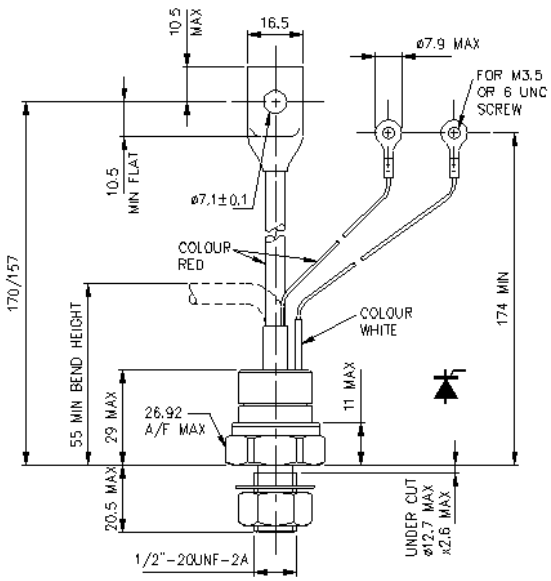

W18 - 101A225

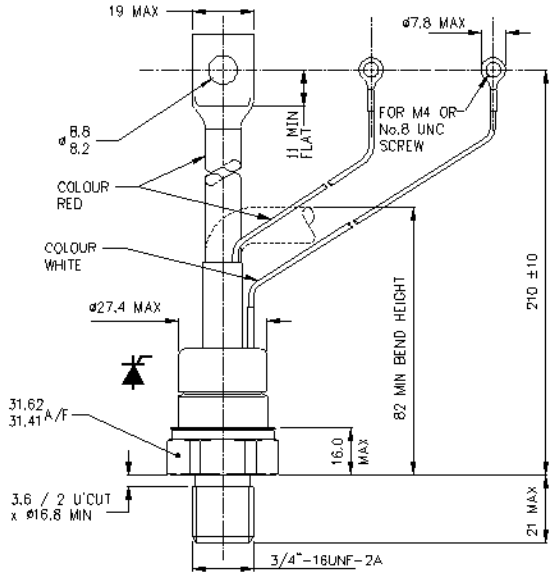

Outline drawings

IXYS UK WESTCODE

Dimensions in mm and inches (1 mm = 0.0394“)

W20 - 100A303

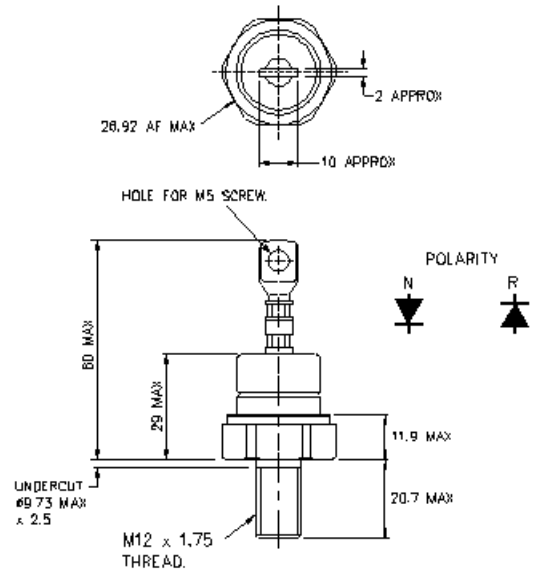

W22 - 100A297

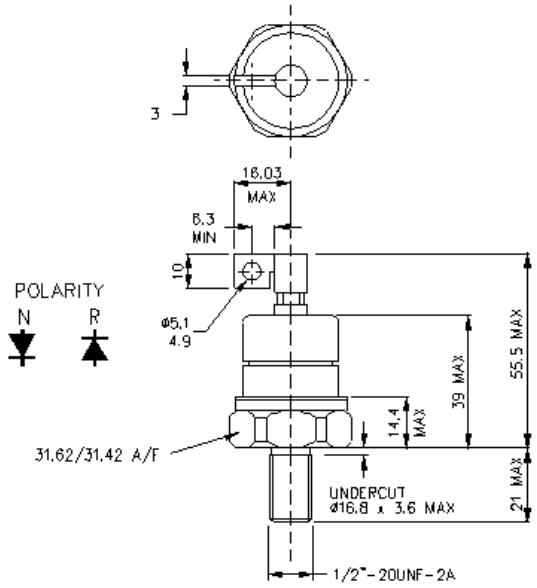

W23 - 100A281

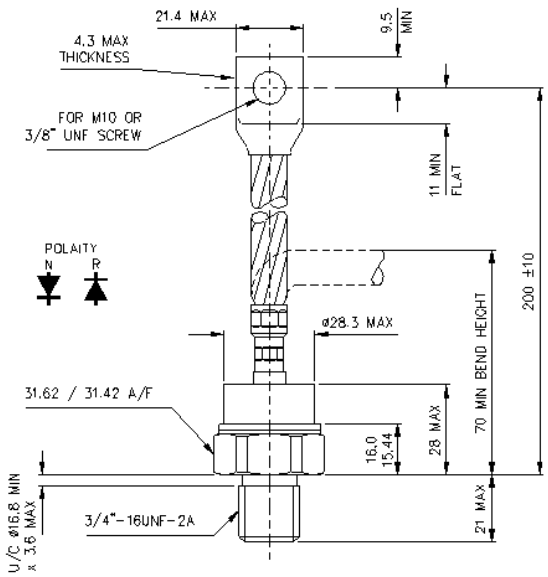

W24 - 100A280

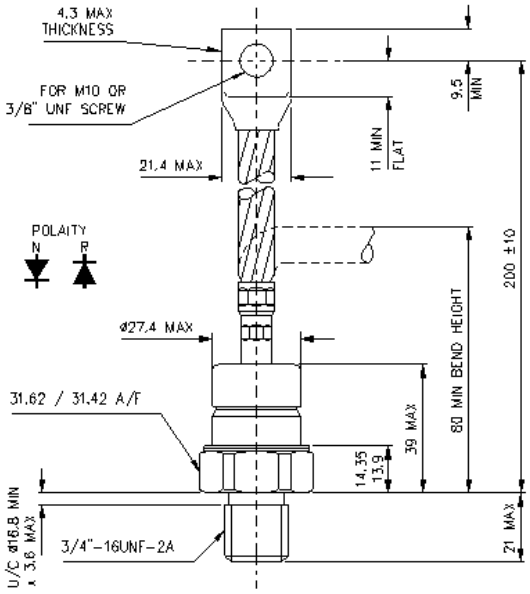

W28 - 100A330

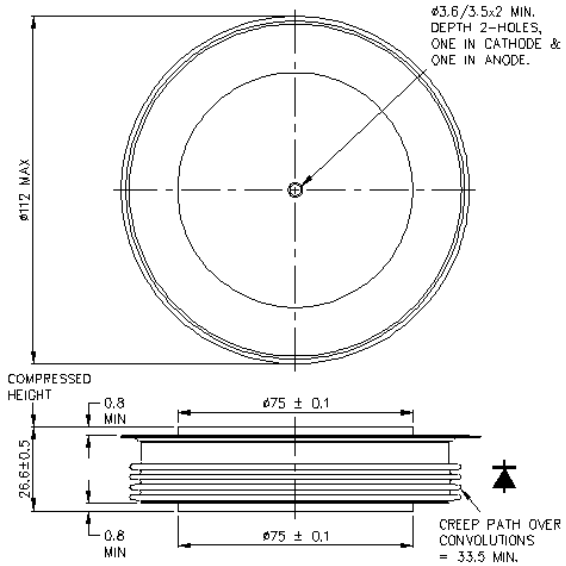

W29 - 100A342

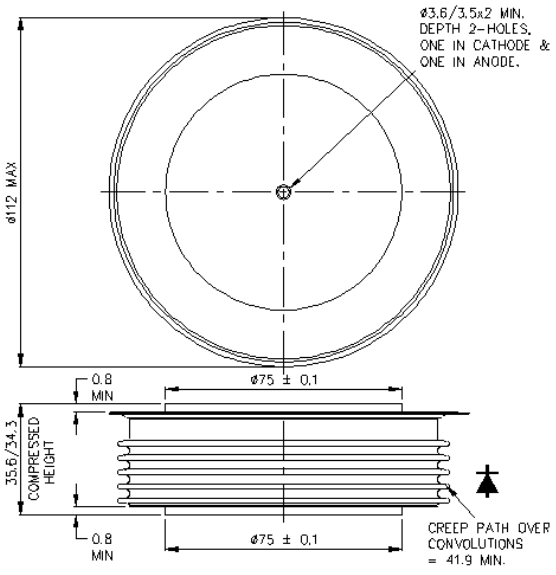

Outline drawings

Dimensions in mm and inches (1 mm = 0.0394“)

W33 - 101A346

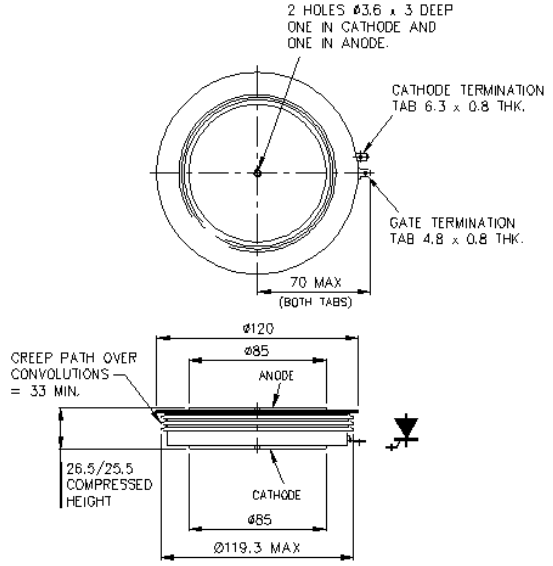

W34 - 101A287

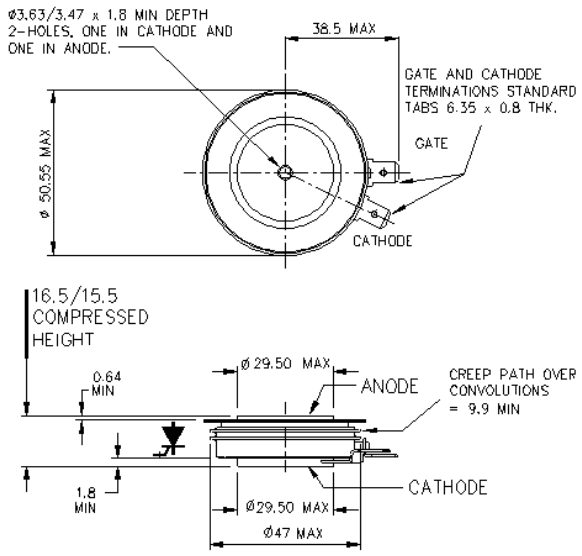

W35 - 101A358

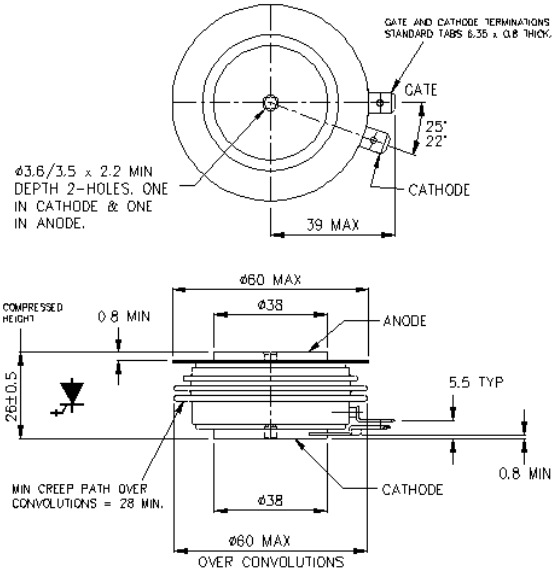

W36 - 101A288

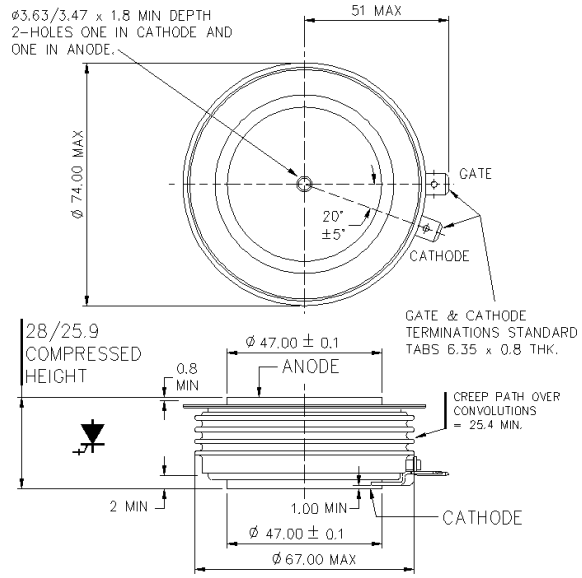

W37 - 100A325

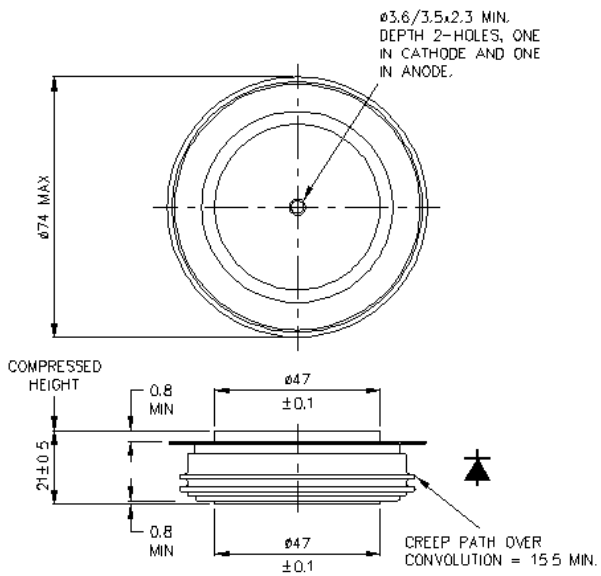

W39 - 100A338

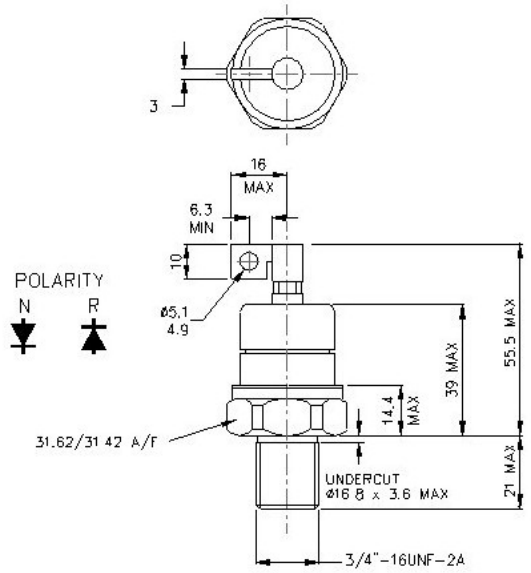

Outline drawings

IXYS UK WESTCODE

Dimensions in mm and inches (1 mm = 0.0394“)

W40 - 171A107

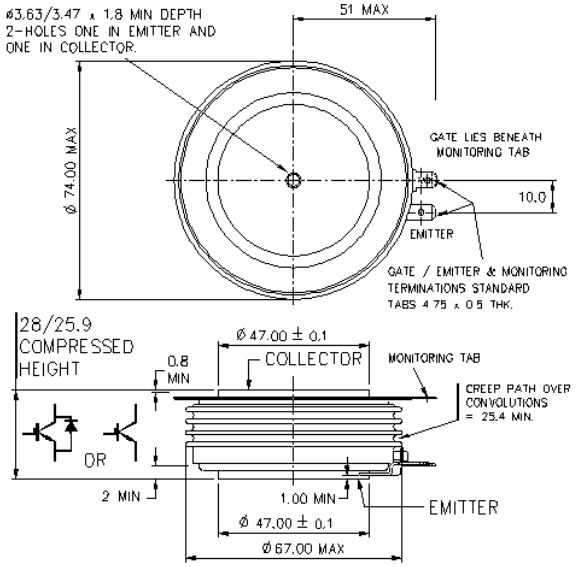

W41 - 171A108

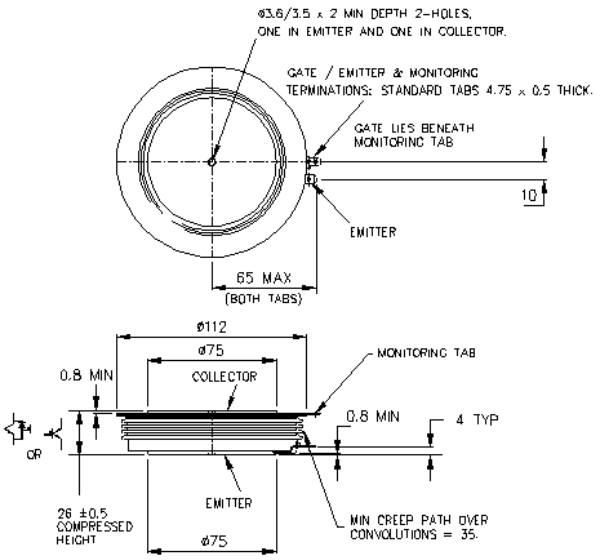

W42- 100A310

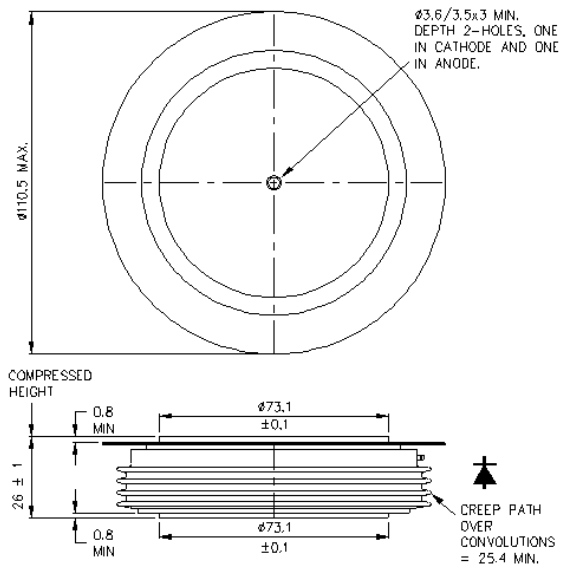

W43 - 100A320

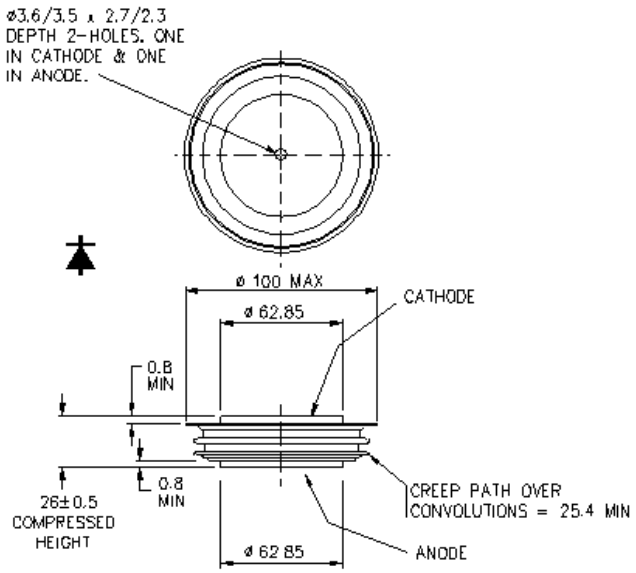

W44 - 101A340

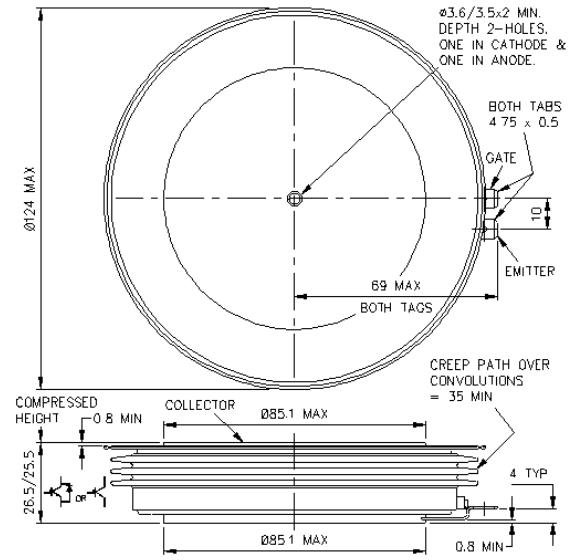

W45 - 101A359

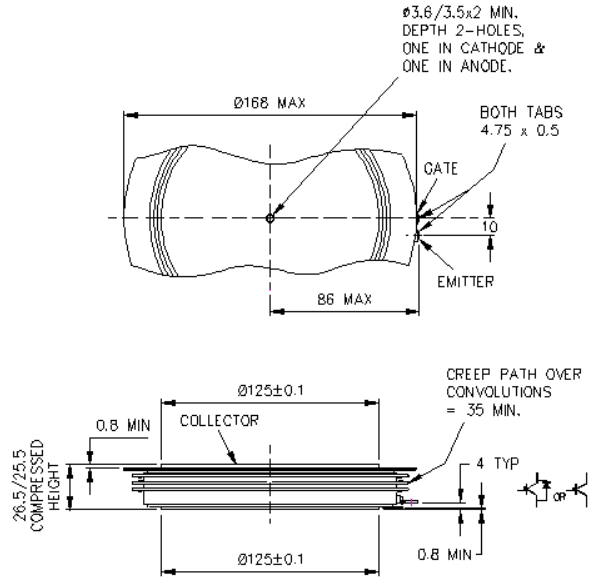

IXYS UK WESTCODE

Dimensions in mm and inches (1 mm = 0.0394“)

W46 - 101A305

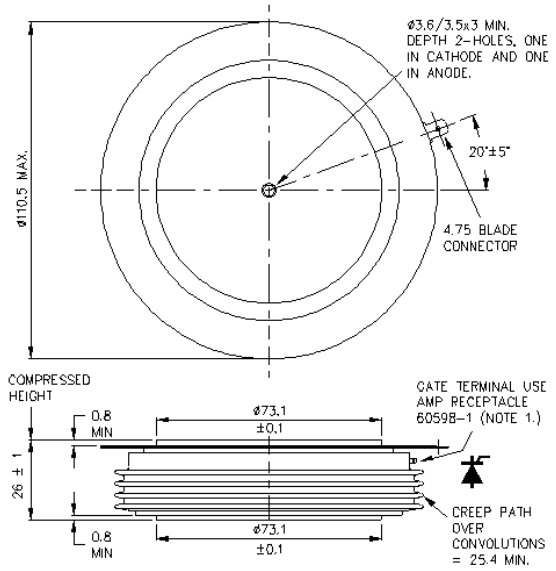

W46x

WC46*

Device outline W46 is available with a slightly reduced height of 25 mm.

At the time of going to press, this option only applies to two Phase Control Thyristors:
N3880ZD160-180 and N6012ZD020-060.

Please refer to Chippenham Factory.

W47 - 100A322

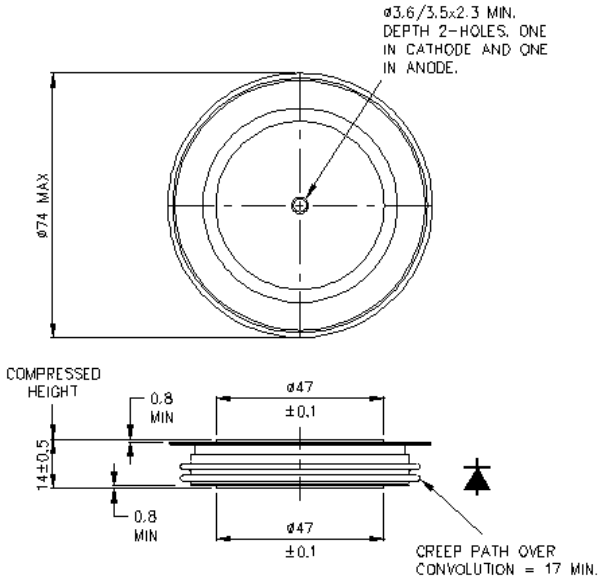

W48 - 101A347

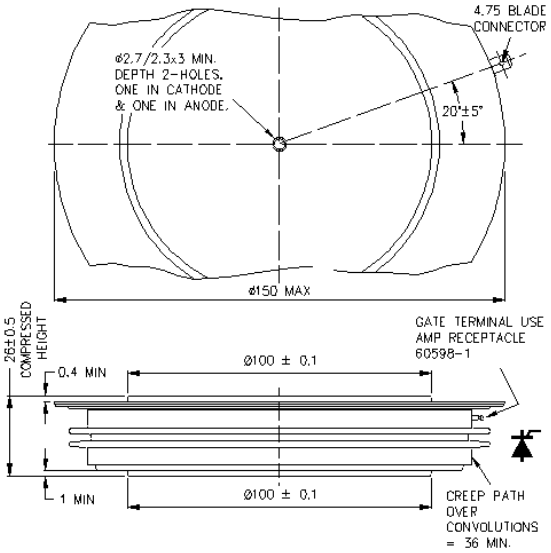

W51 - 101A334

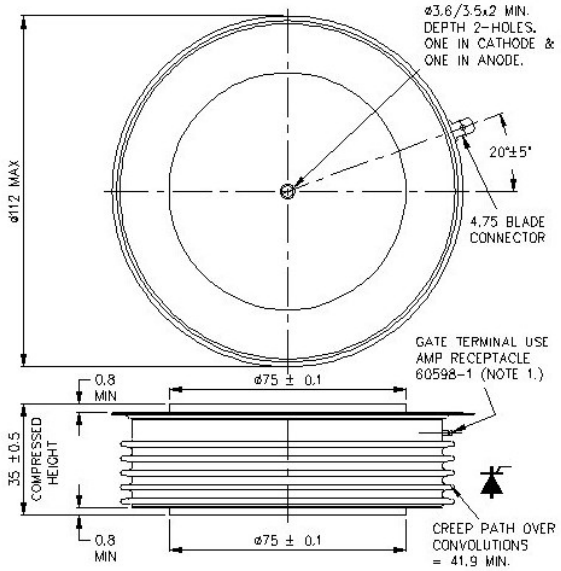

W52 - 100A328

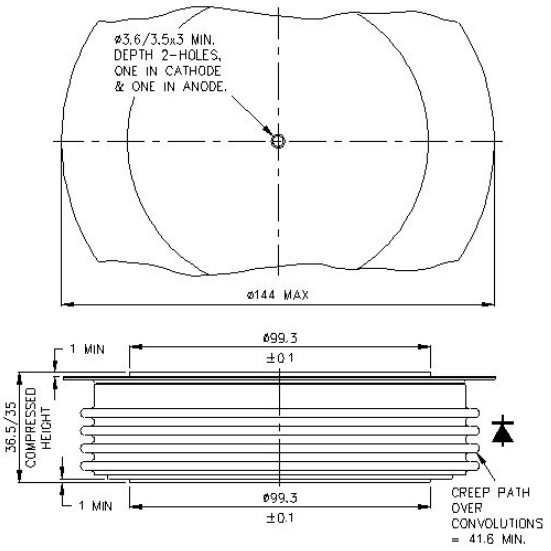

IXYS UK WESTCODE

Dimensions in mm and inches (1 mm = 0.0394“)

W54 - 100A353

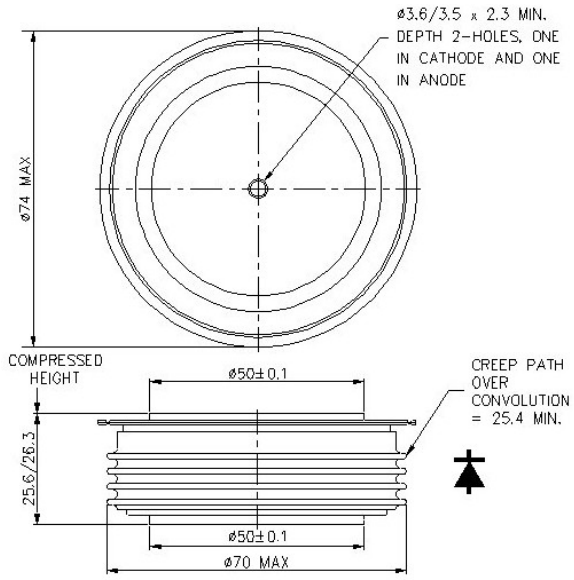

W55 - 101A352

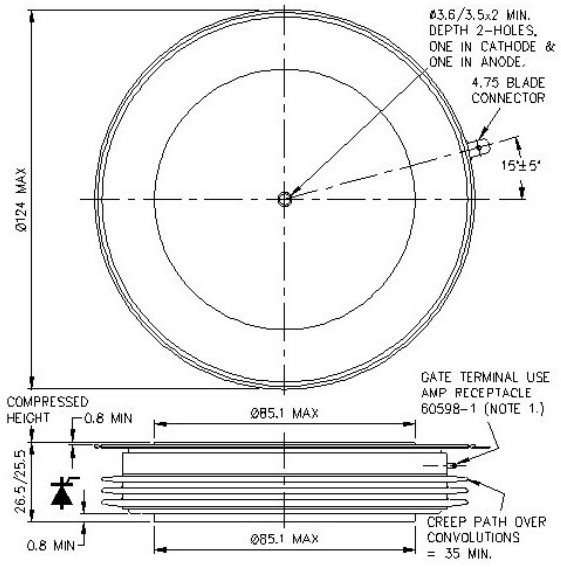

W56 - 101A365

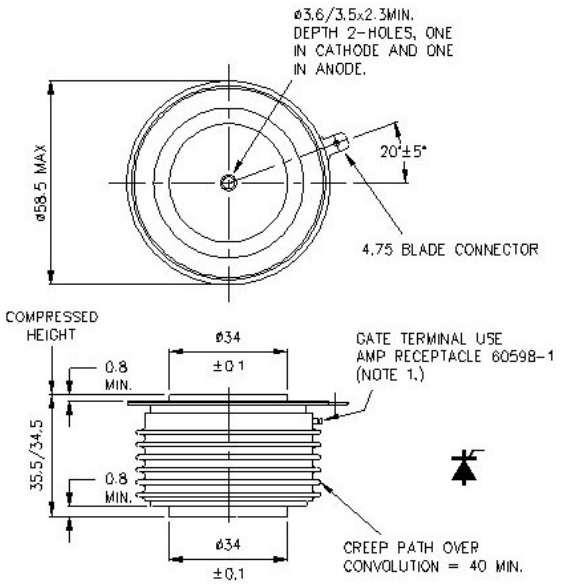

W57 - 101A363

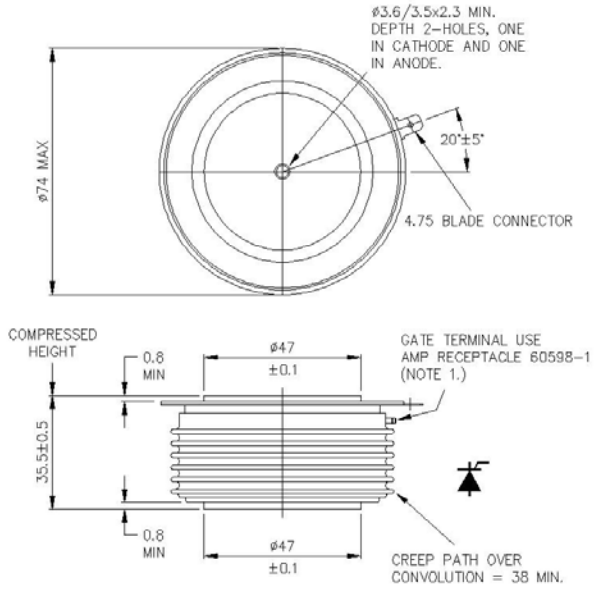

W58 - 101A237

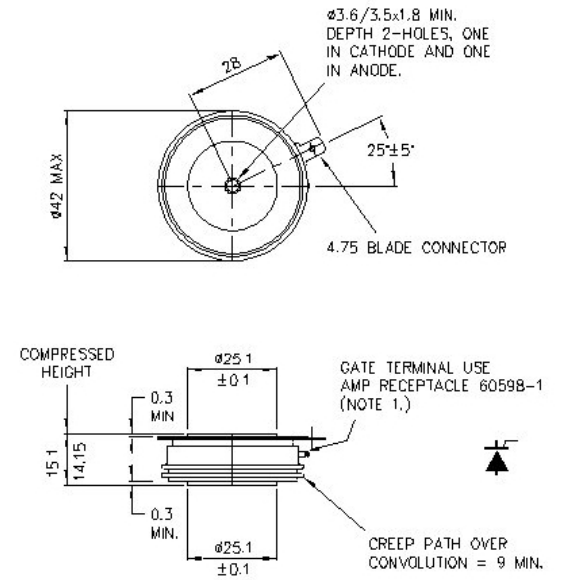

W59 - 100A359

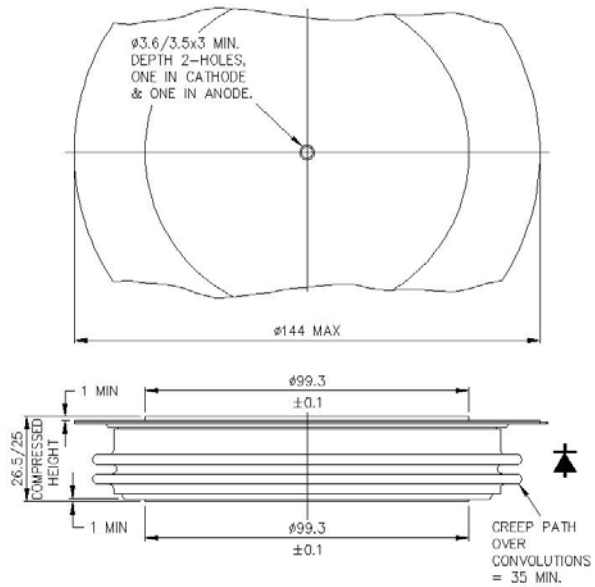

Outline drawings

IXYS UK WESTCODE

Dimensions in mm and inches (1 mm = 0.0394“)

W62 - 101A314

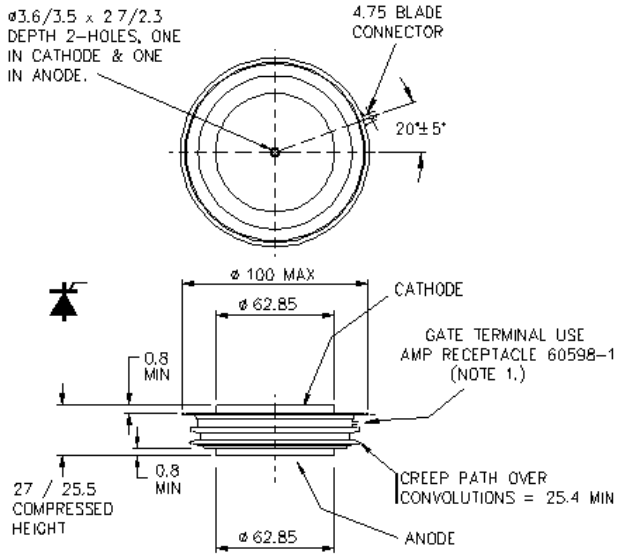

W63 - 150A111

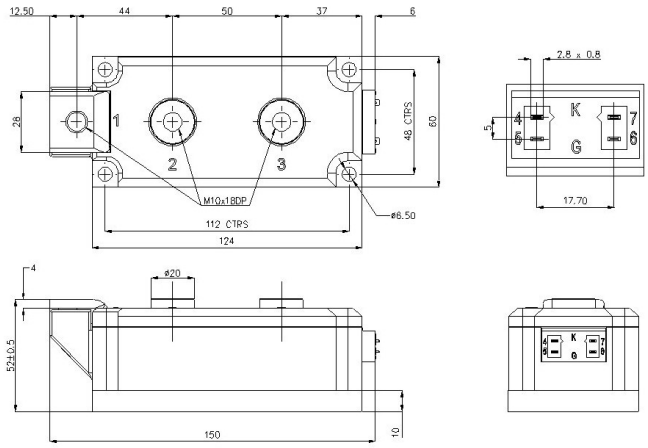

W64 - 150A113

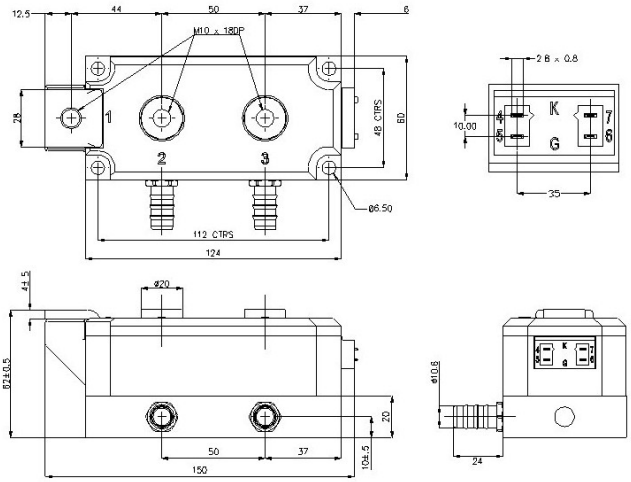

W67 - 101A366

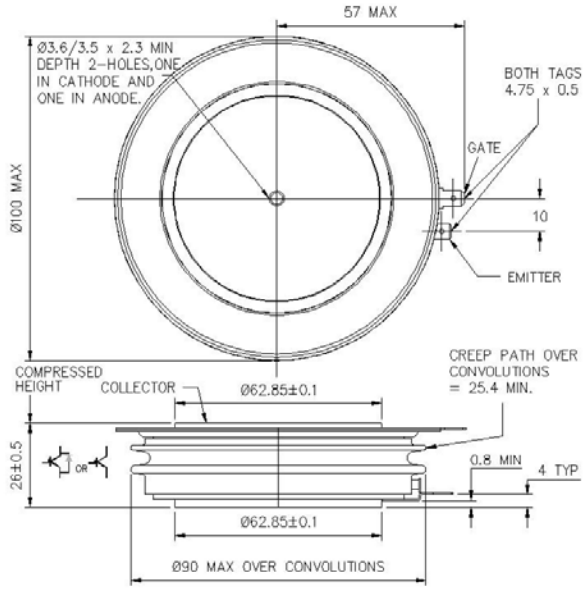

W68 - 100A367

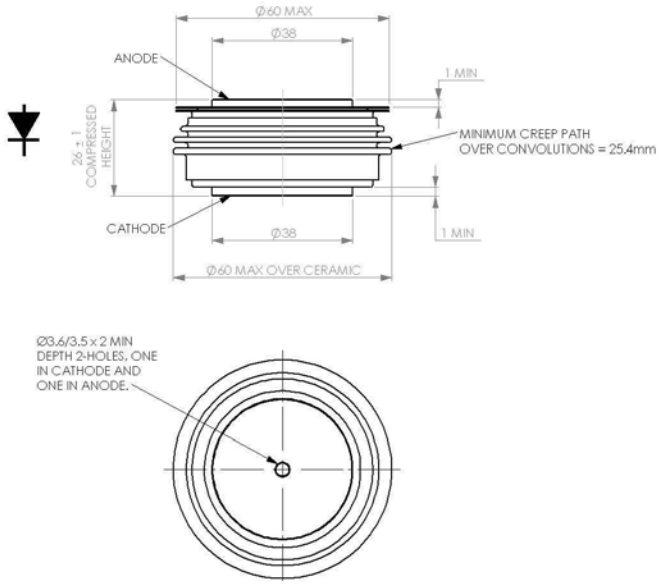

W70 - 101A357

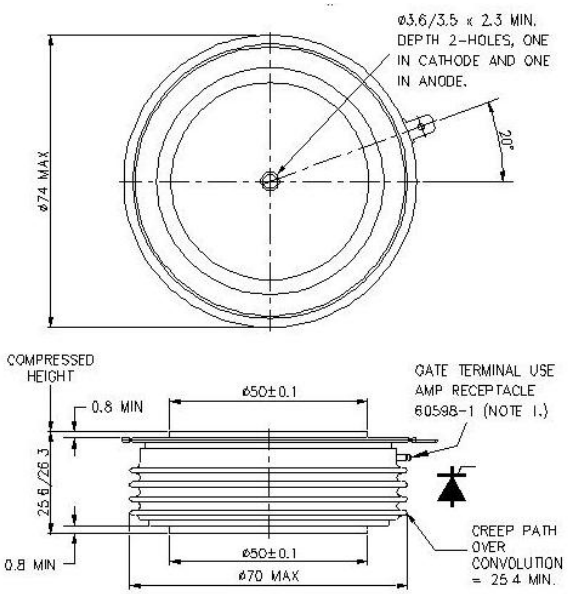

Outline drawings

IXYS UK WESTCODE

Dimensions in mm and inches (1 mm = 0.0394“)

W71 - 101A375

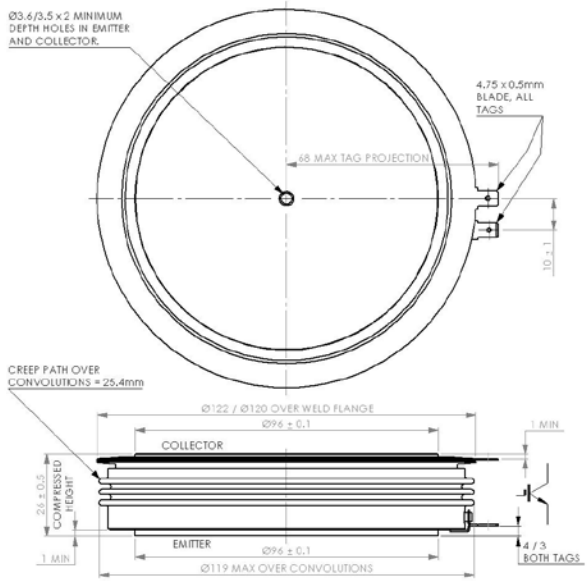

W73 - 150A122

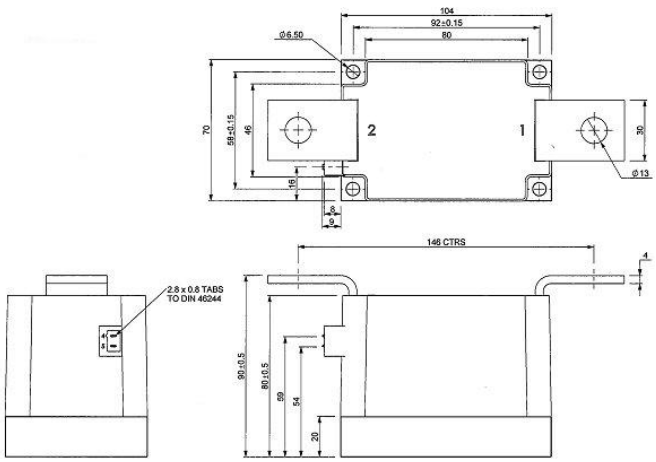

W74 - 150A123

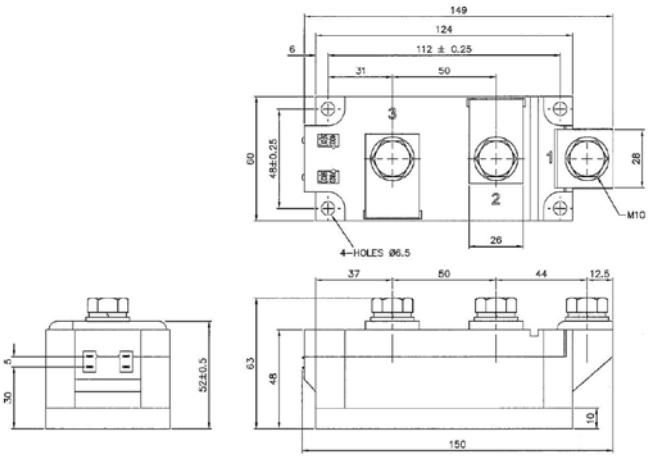

W75 - 101A377

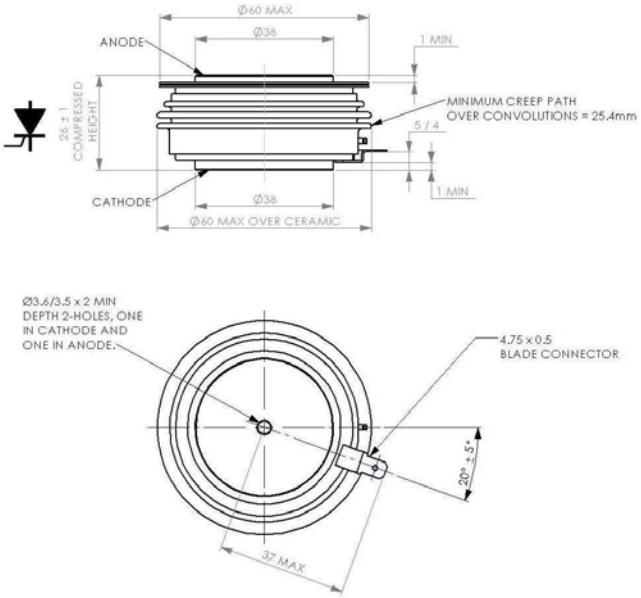

W76 - 101A392

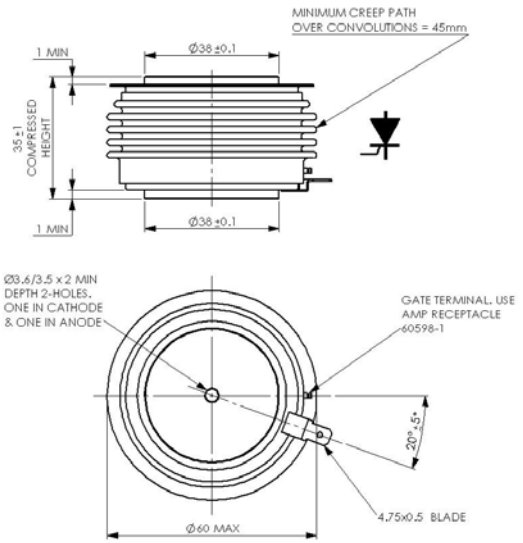

W77 - 101A372

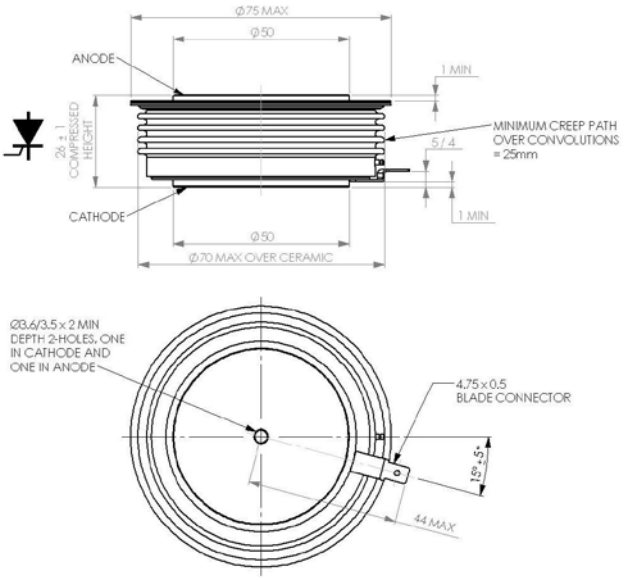

Outline drawings

IXYS UK WESTCODE

Dimensions in mm and inches (1 mm = 0.0394“)

W78 - 101A393

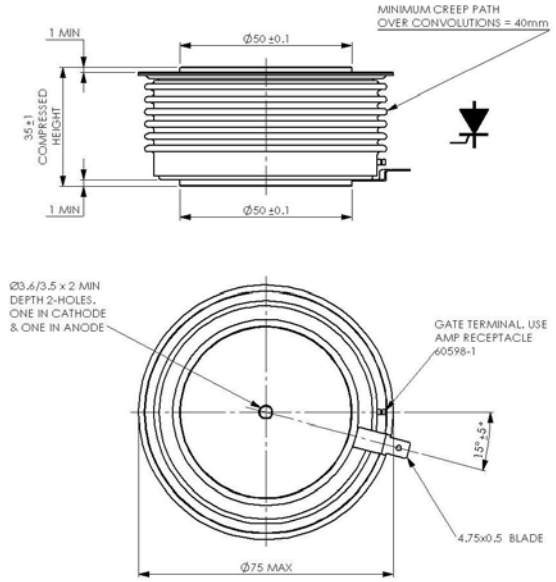

W81 - 101A373

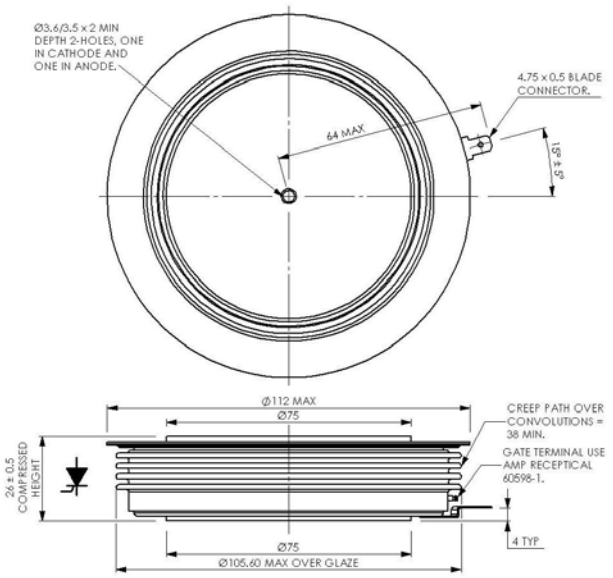

W82 - 101A395

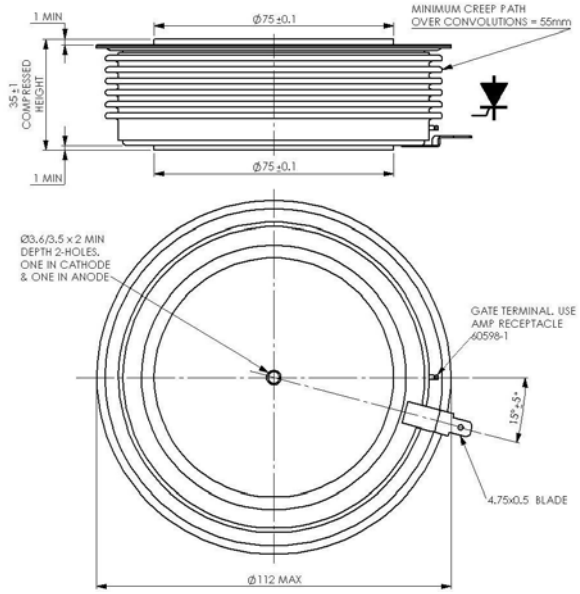

W85 - 101A388

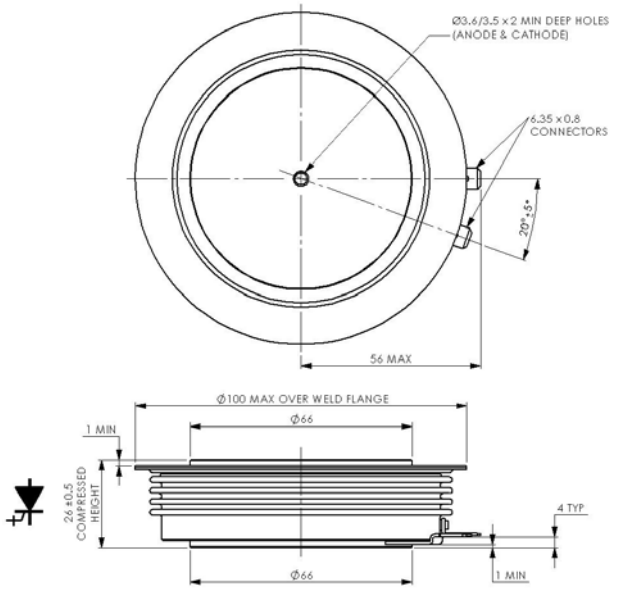

W86 - 101A316

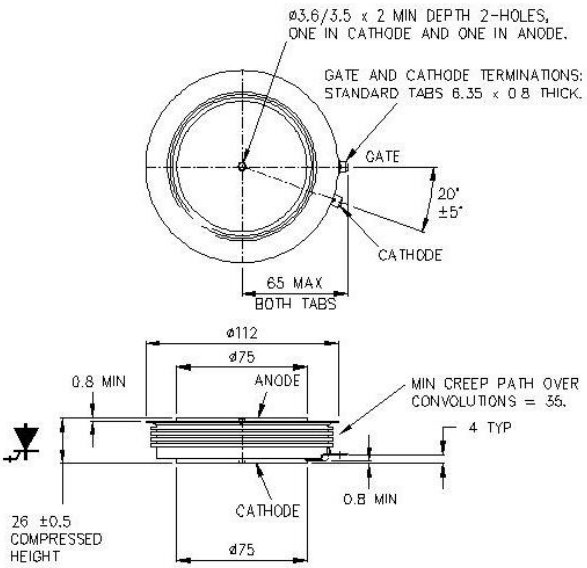

W87 101A376

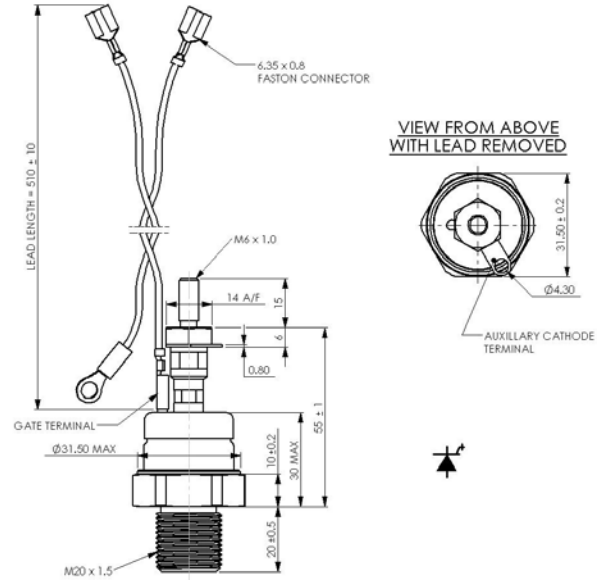

Outline drawings

IXYS UK WESTCODE

Dimensions in mm and inches (1 mm = 0.0394“)

W88 - 150A124

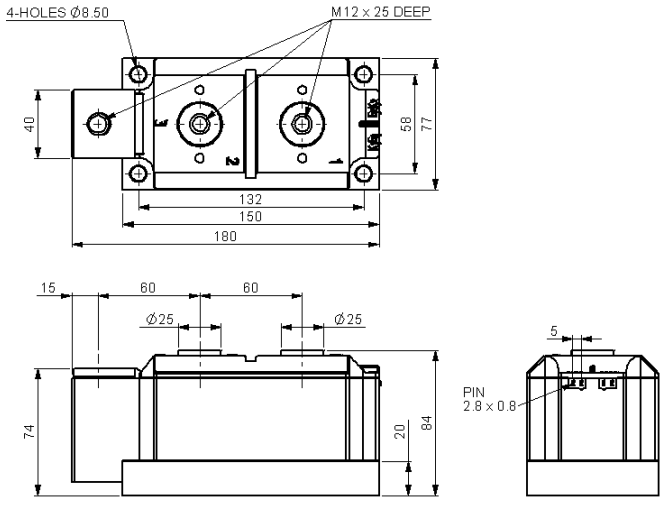

W89 - 100A368

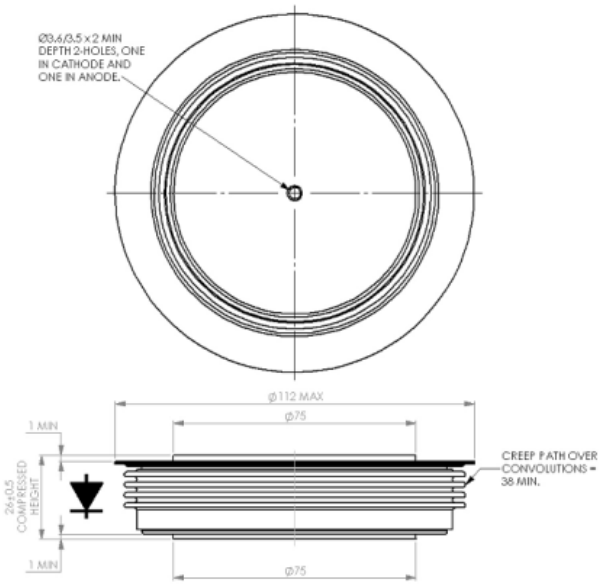

W90 - 101A405

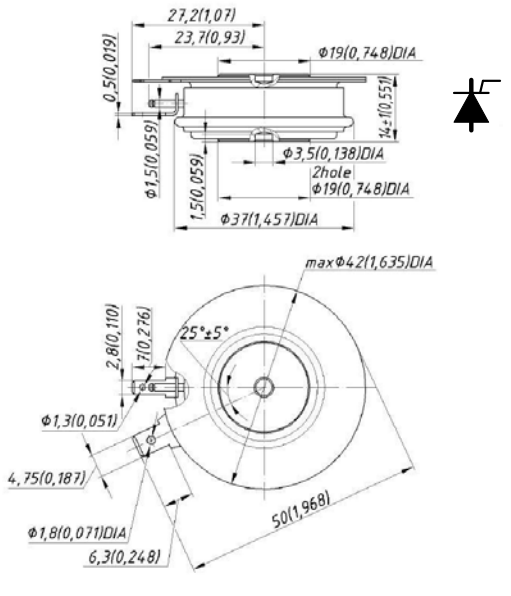

W91 - 101A406

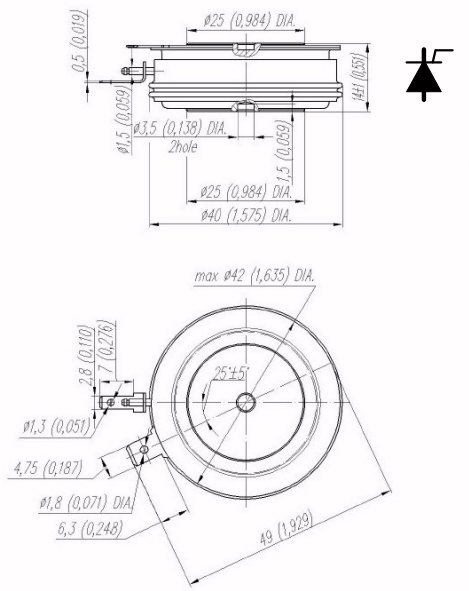

W92 - 101A407

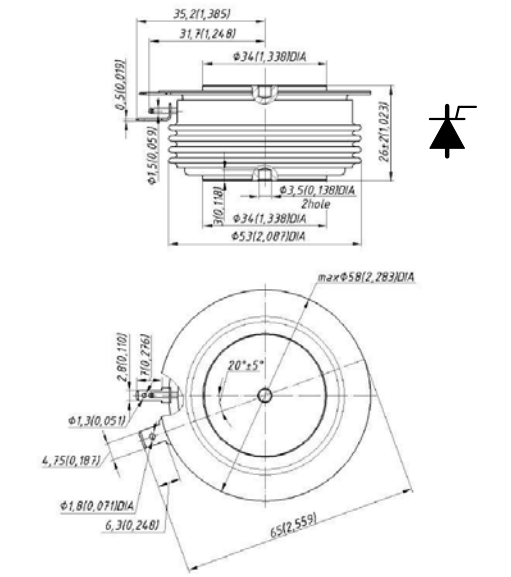

W93 - 101A404

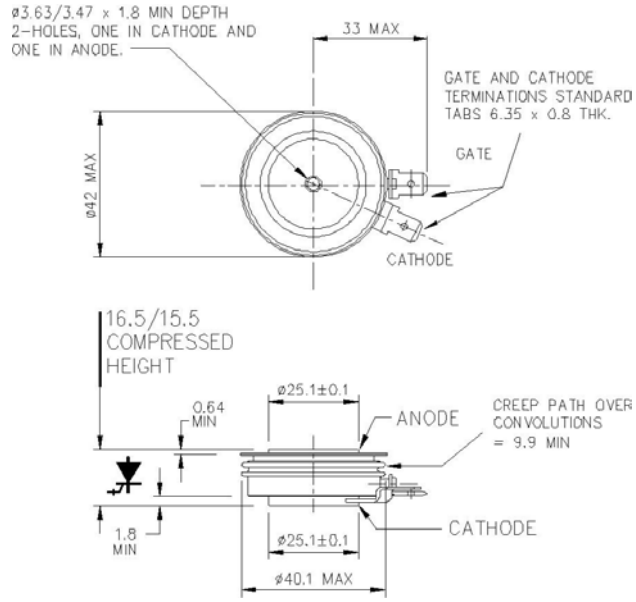

Outline drawings

IXYS UK WESTCODE

Dimensions in mm and inches (1 mm = 0.0394“)

W94 - 100A372

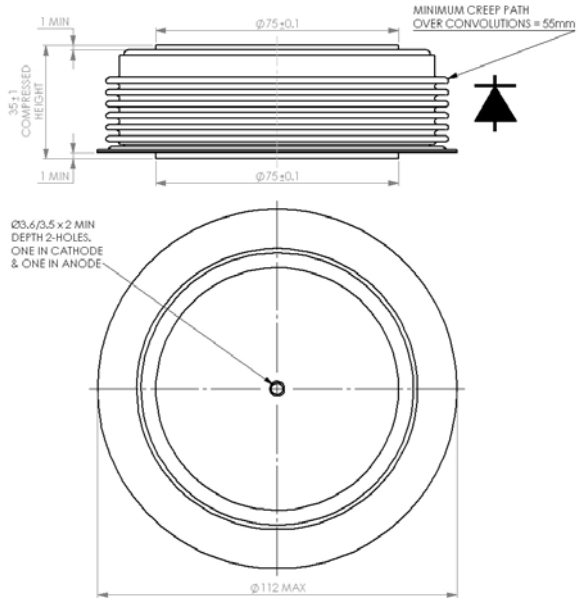

IXYS UK WESTCODE

Dimensions in mm and inches (1 mm = 0.0394“)

WD2 - 100A335

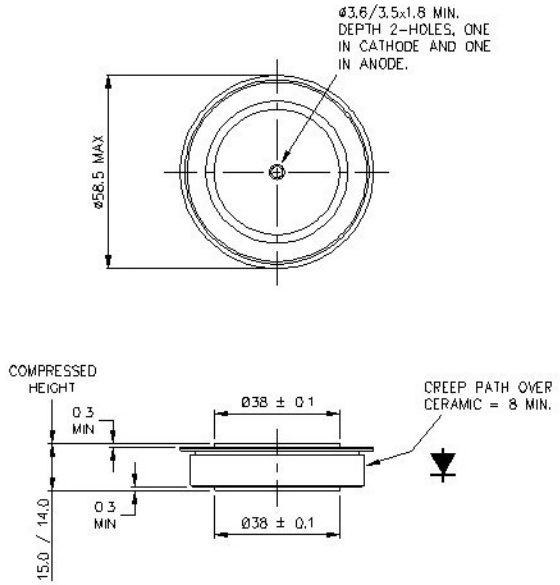

WD3 - 100A356

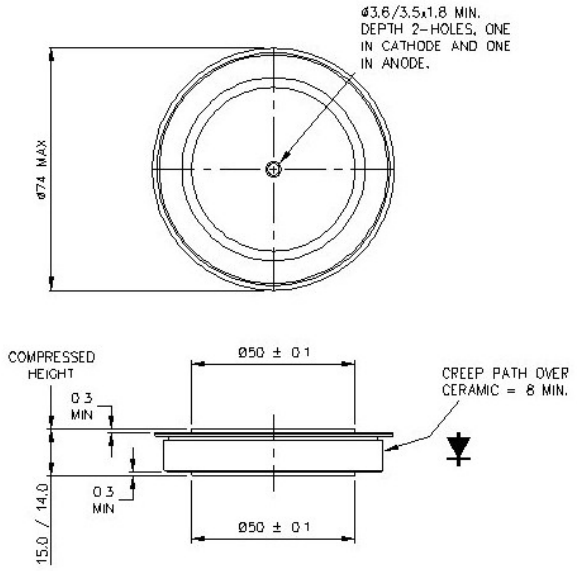

WD5 - 100A361 - 26 mm thick

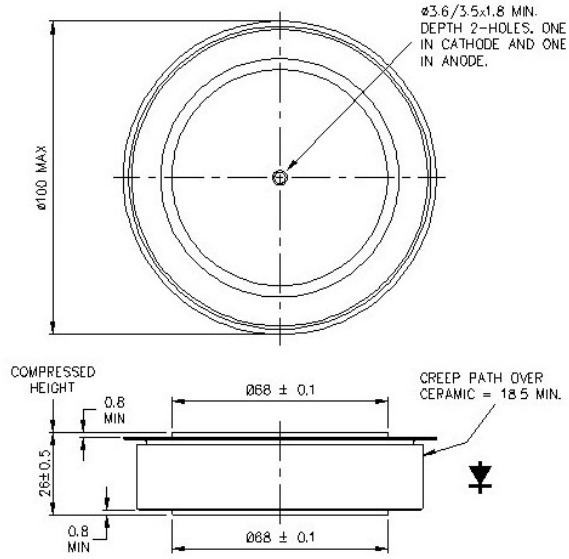

WD6 - 100A360 - 33 mm thick

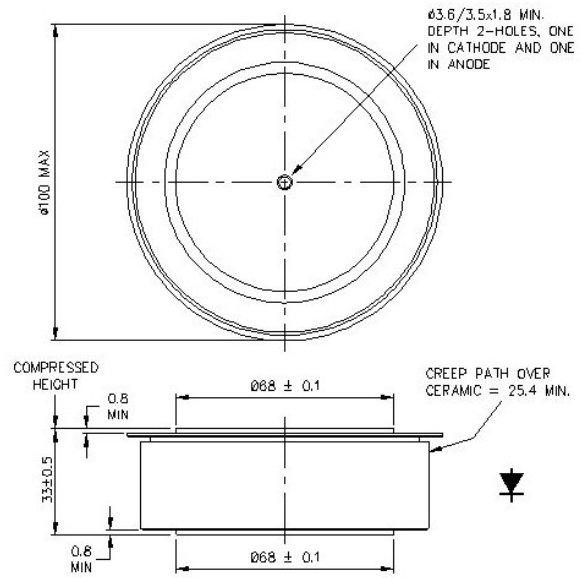

WD7 - 100A363

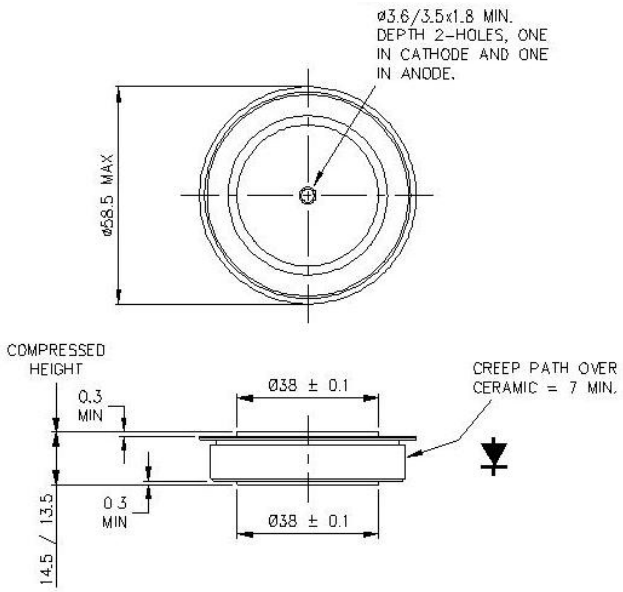

Outline drawings

IXYS UK WESTCODE

Dimensions in mm and inches (1 mm = 0.0394“)

WP1 - 101A361

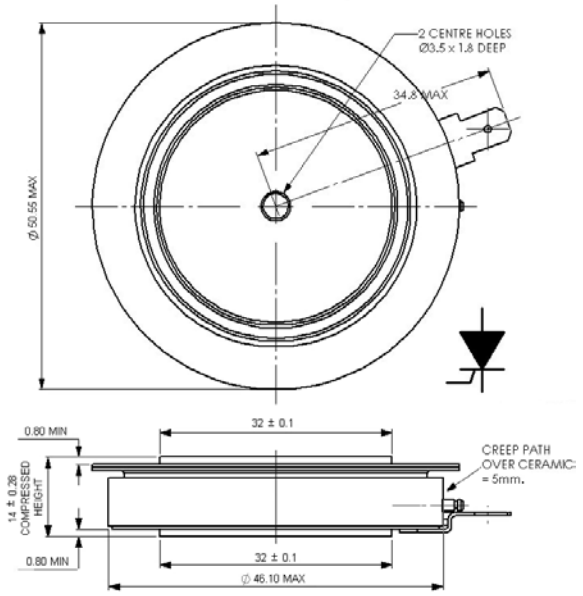

WP2 - 101A354

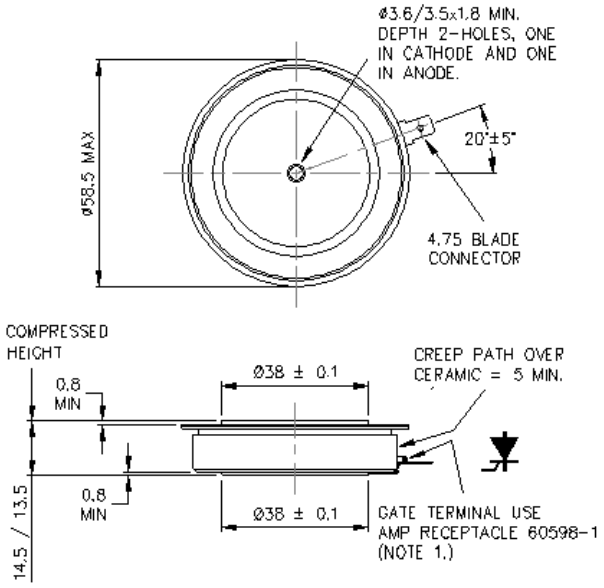

WP3 - 101A353

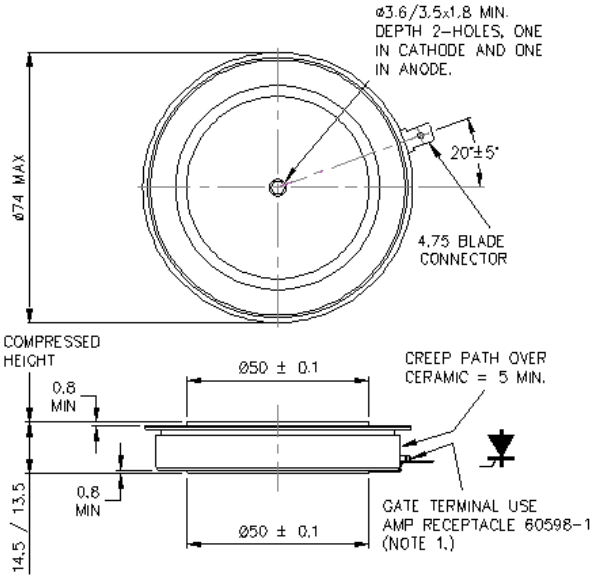

WP4 - 101A355

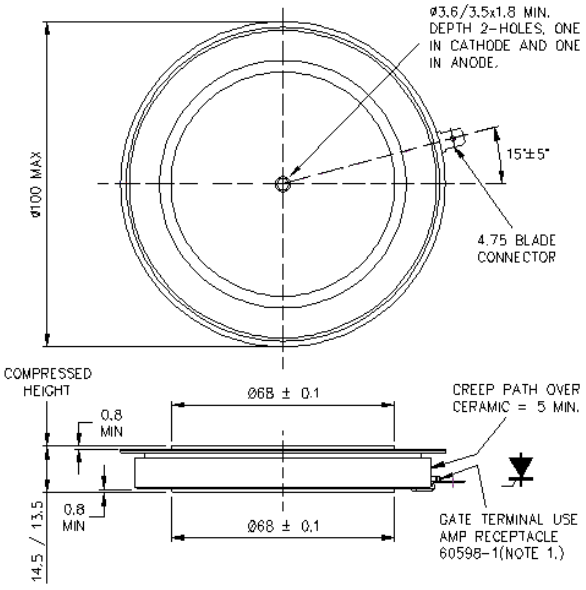

WP5 - 101A356

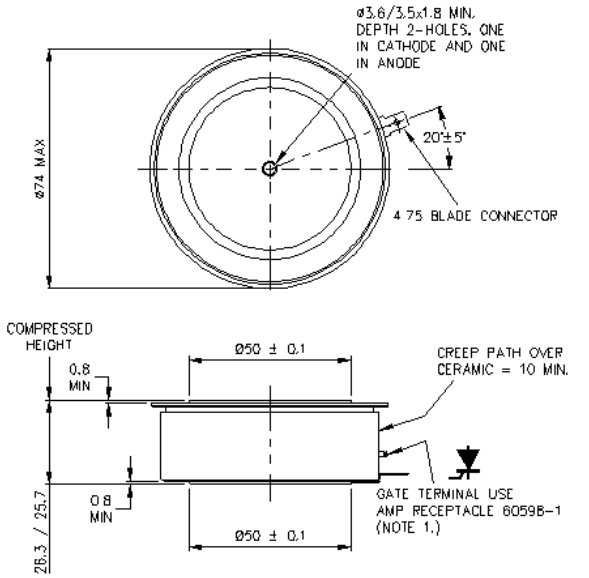

WP6 - 101A389

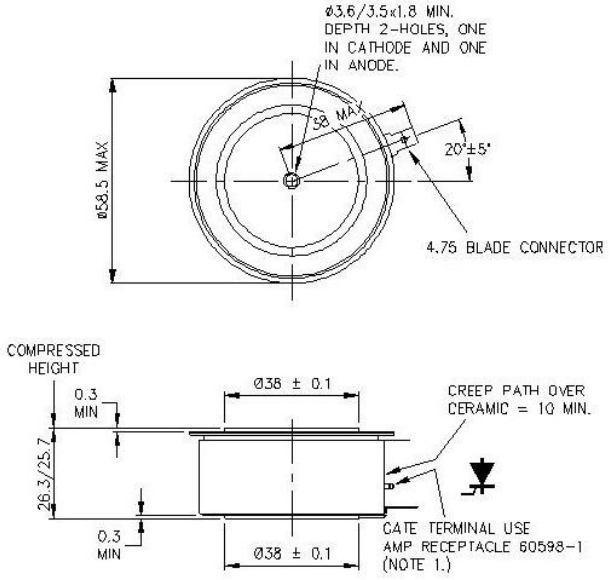

Outline drawings

IXYS UK WESTCODE

Dimensions in mm and inches (1 mm = 0.0394“)

WC1 - CMK450S56M

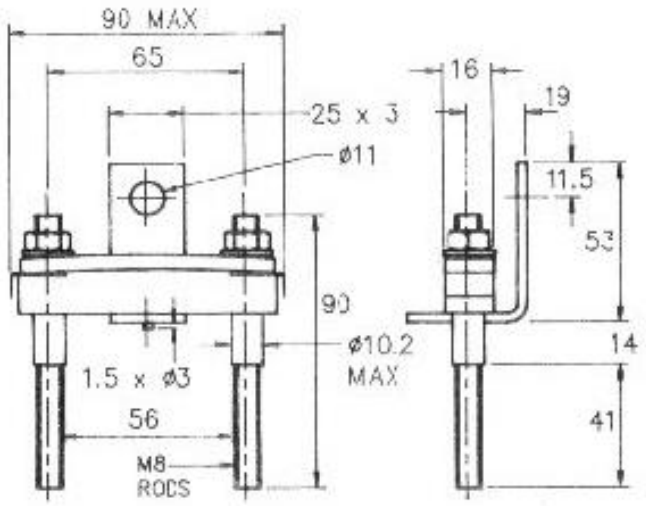

WC2 - CMK450D56M

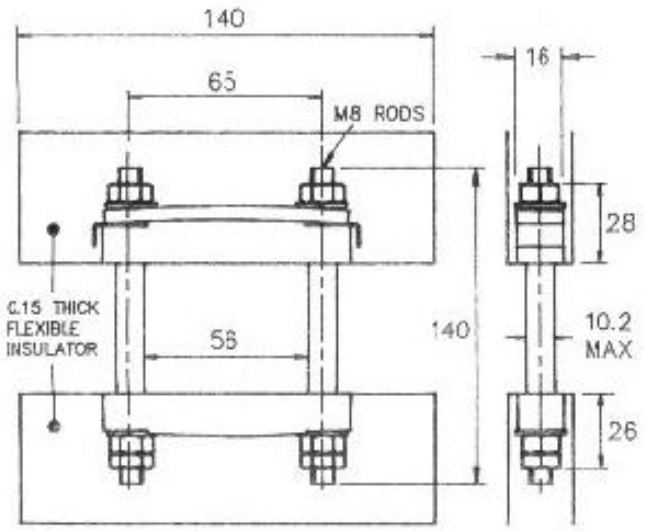

WC3 - CMK450DT56M

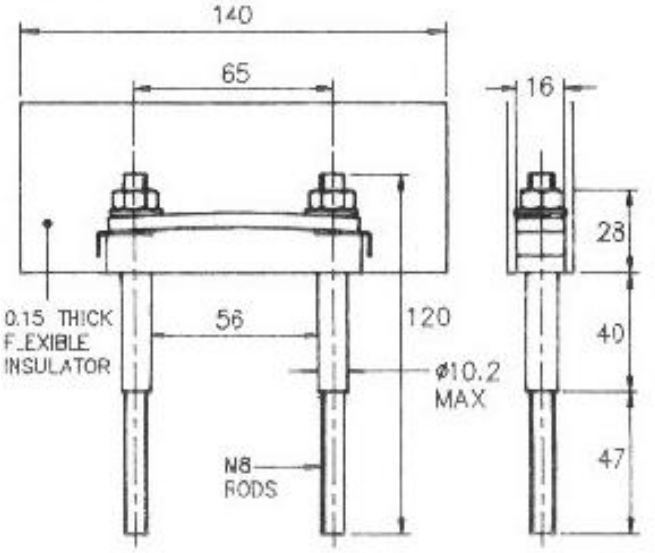

WC4 - CMK550S56M

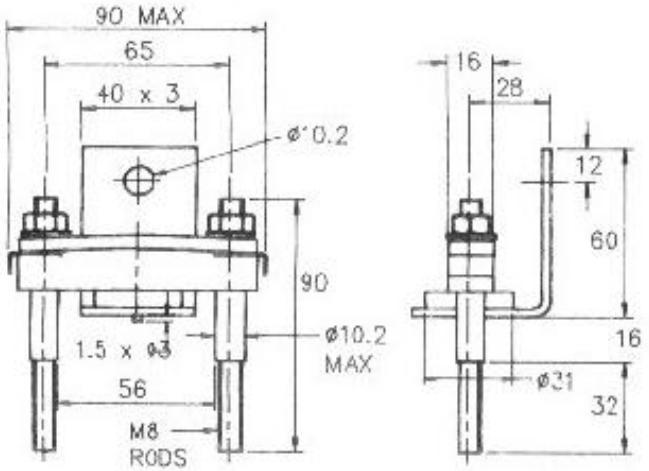

WC5 - CMK550D56M

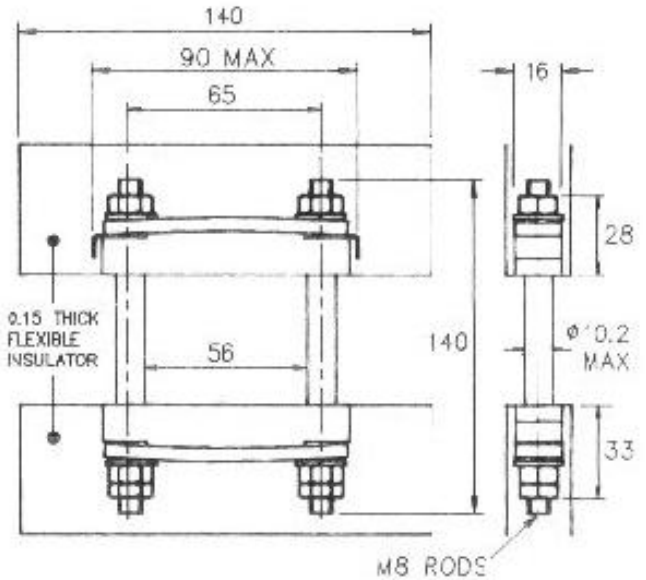

WC6 - CMK900S56M

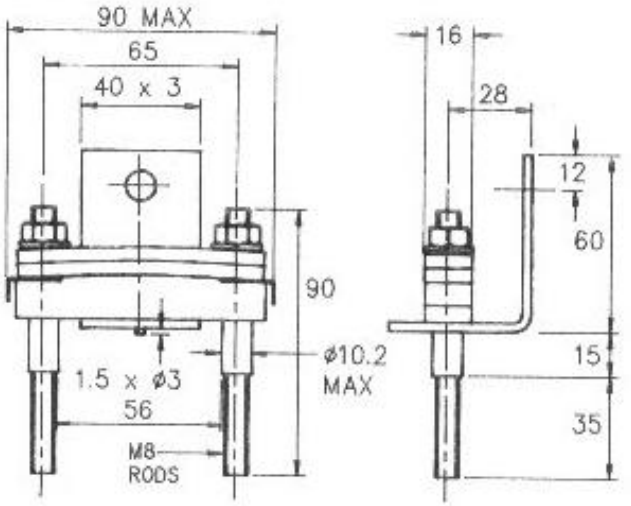

Outline drawings

Dimensions in mm and inches (1 mm = 0.0394“)

WC7 - CMK900D56M

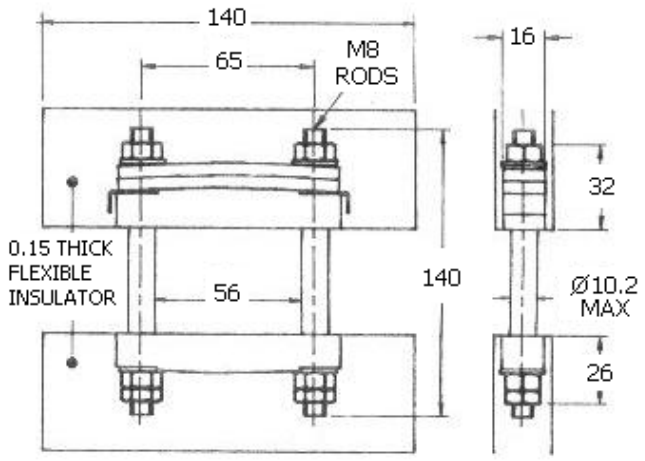

WC8 - CMK900DT56M

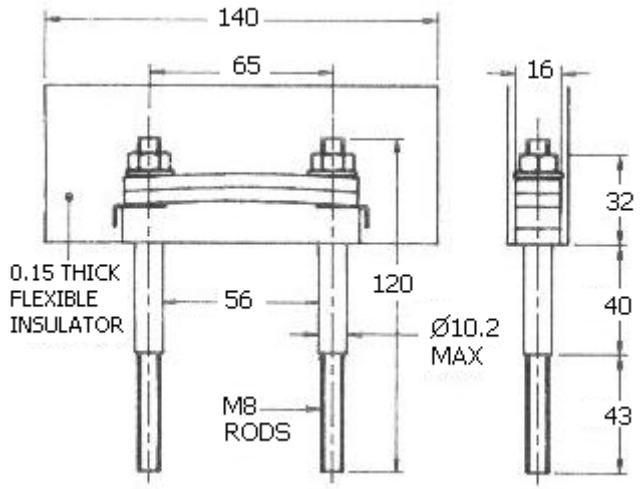

WC9 - CMK0600S74M

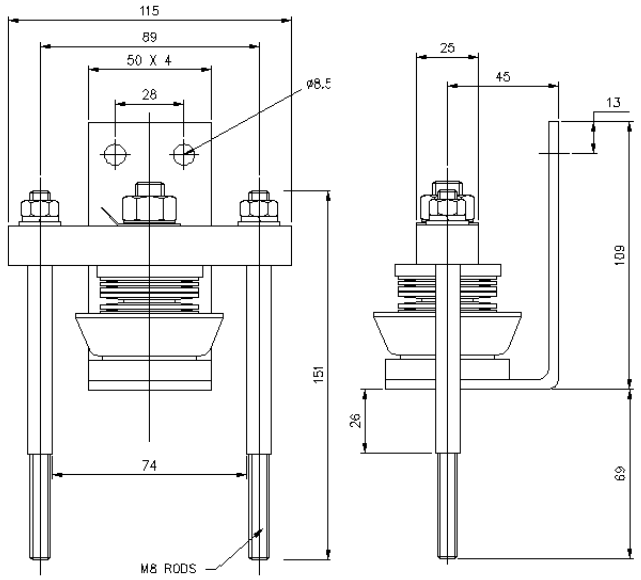

WC10 - CMK0600D74M

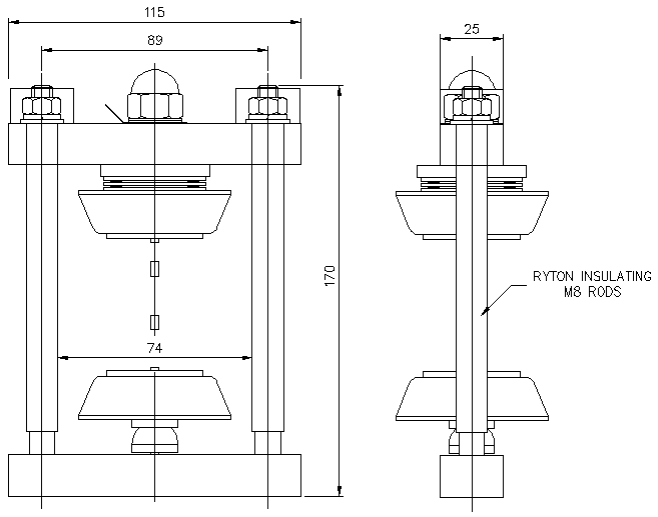

WC11 - CMK1000S74M

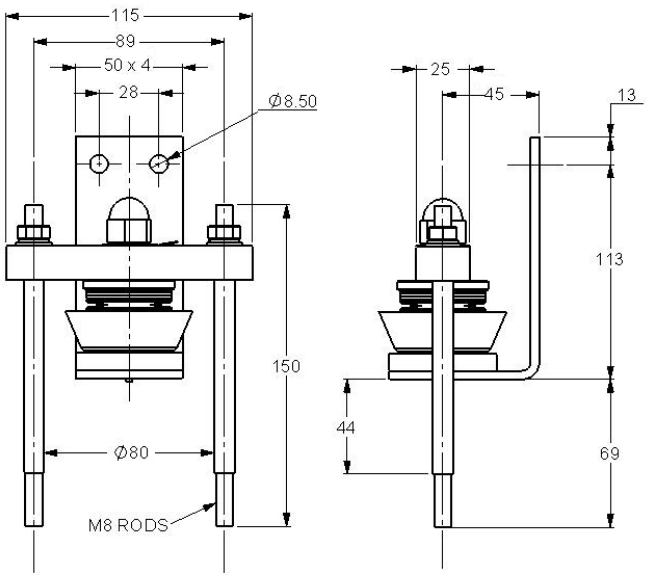

WC12 - CMK1000D74M

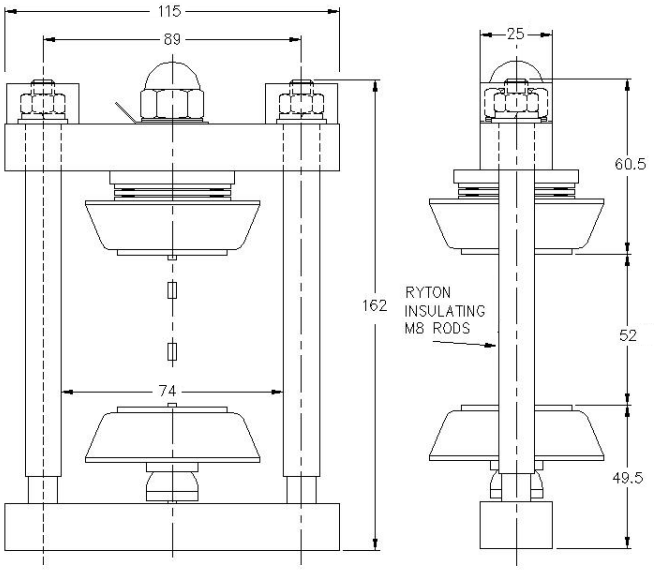

IXYS UK WESTCODE

Dimensions in mm and inches (1 mm = 0.0394“)

WC13 - CMK1100D76M

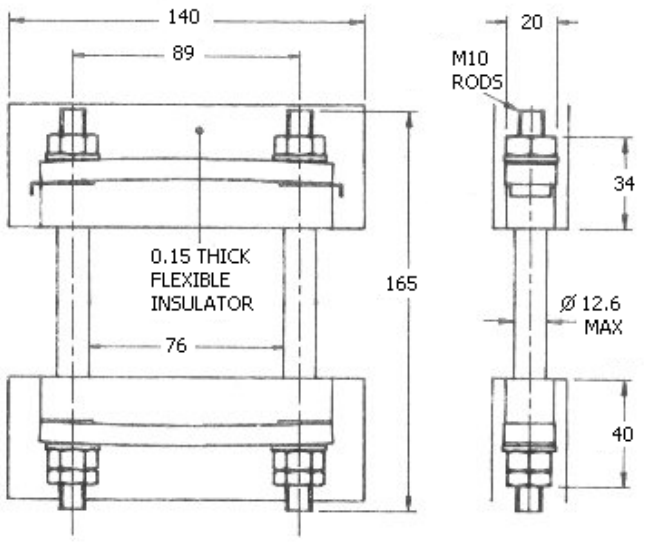

WC14 - CMK1130S76M

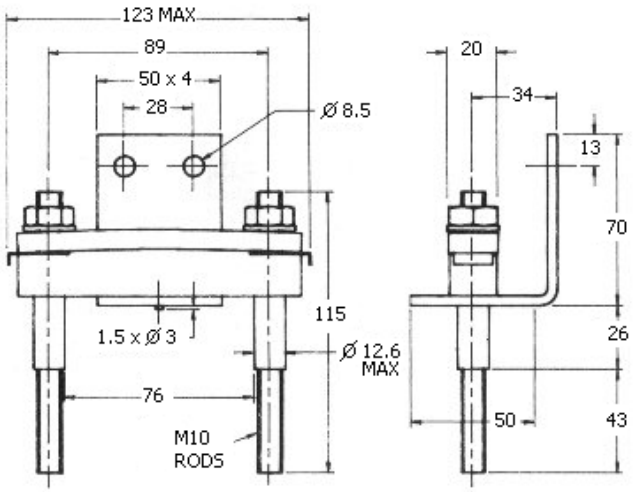

WC15 - CMK1130D76M

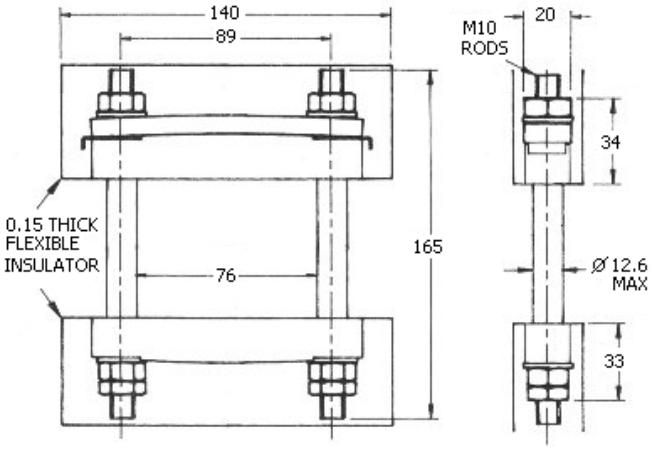

WC16 - CMK1130DT76M

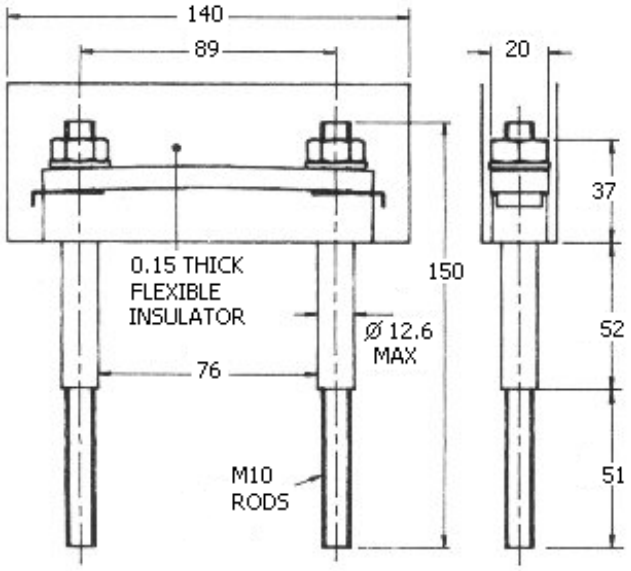

WC17 - CMK1800S76M

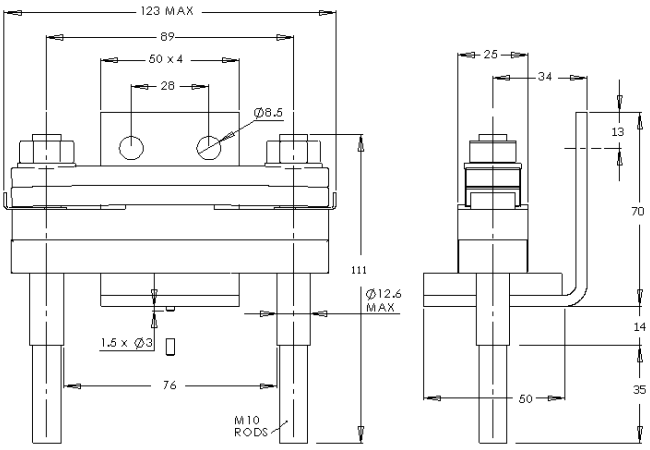

WC18 - CMK1800D76MM6

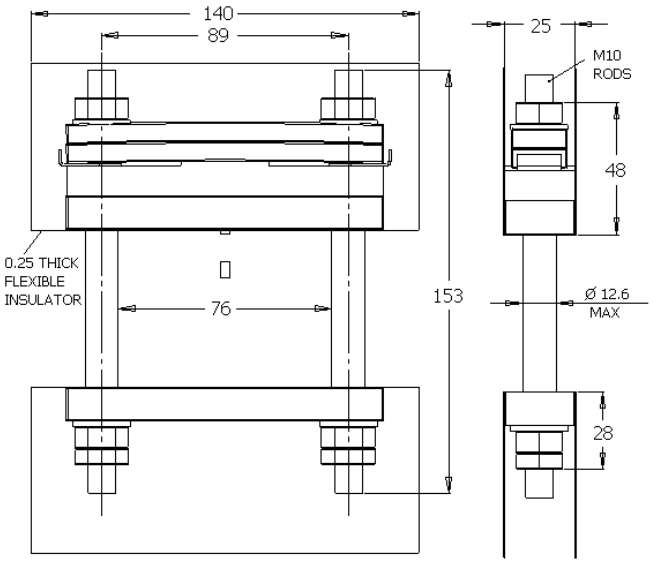

Outline drawings

IXYS UK WESTCODE

Dimensions in mm and inches (1 mm = 0.0394“)

WC19 - CMK1800DT76M

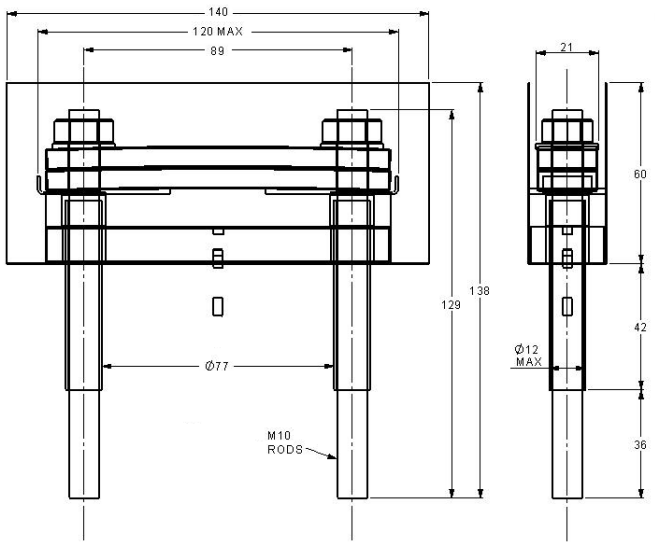

WC20 - CMK2100S76M

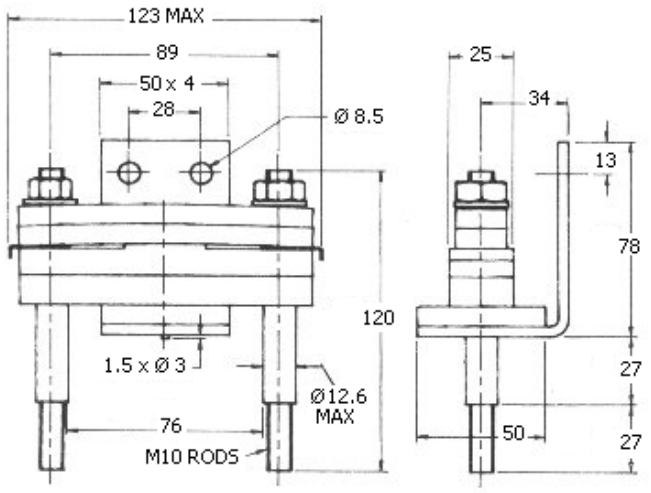

WC21 - CMK2100D76M

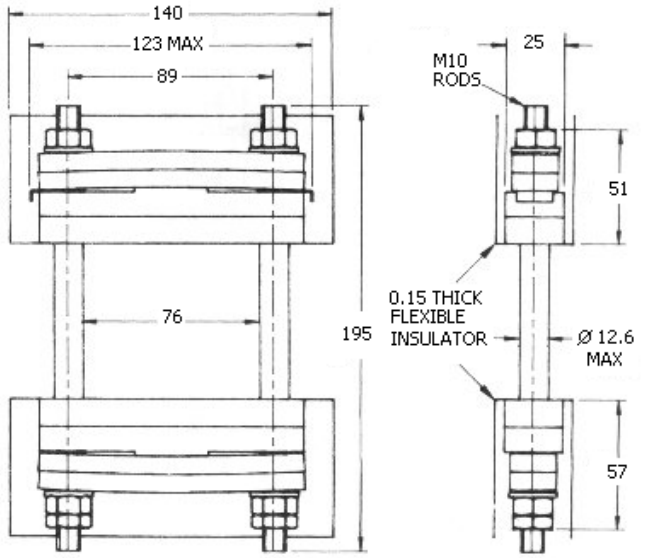

WC22 - CMK2140S76M

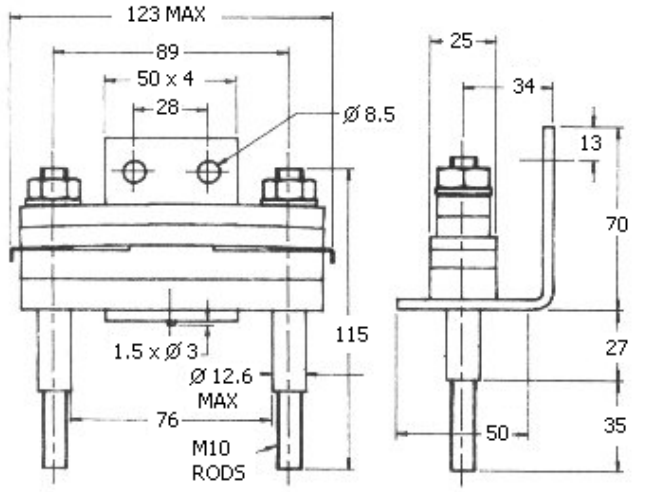

WC23 - CMK2140D76M

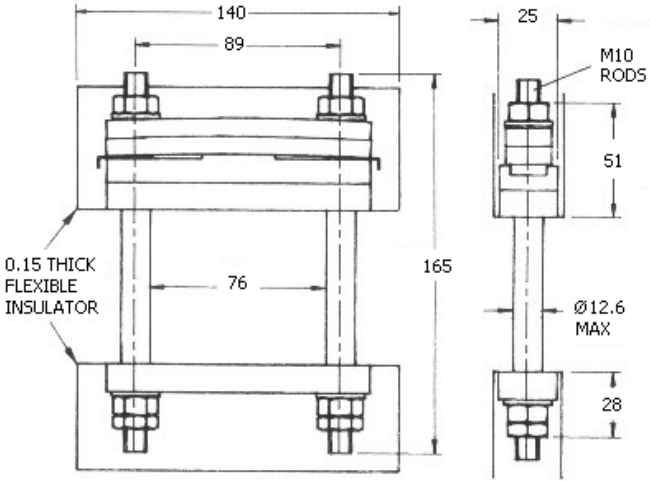

WC24 - CMK2140D76M

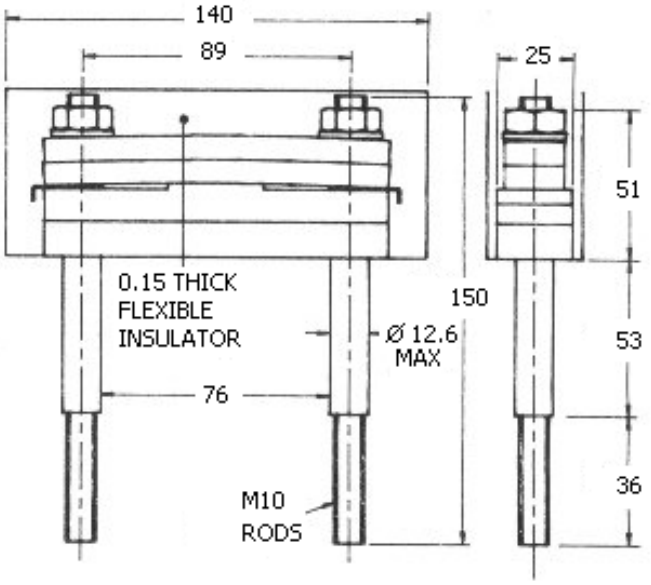

IXYS UK WESTCODE

Dimensions in mm and inches (1 mm = 0.0394“)

WC25 - CMK2700S76M

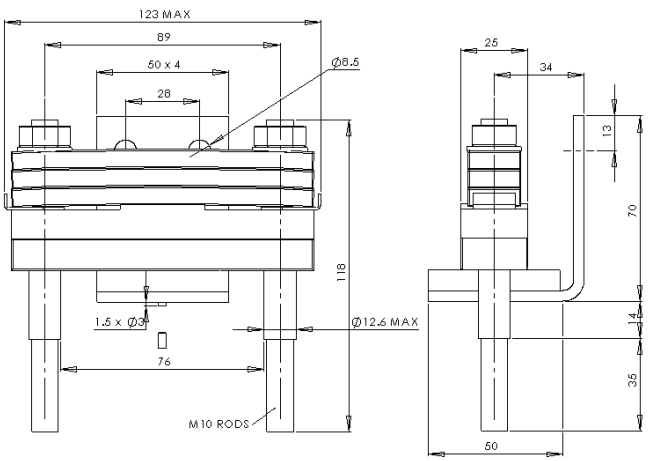

WC26 - CMK2700D76M

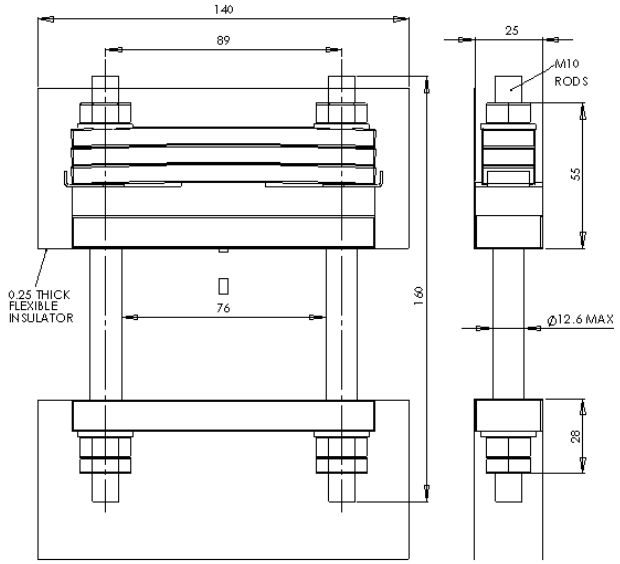

WC27 - CMK2700DT76M

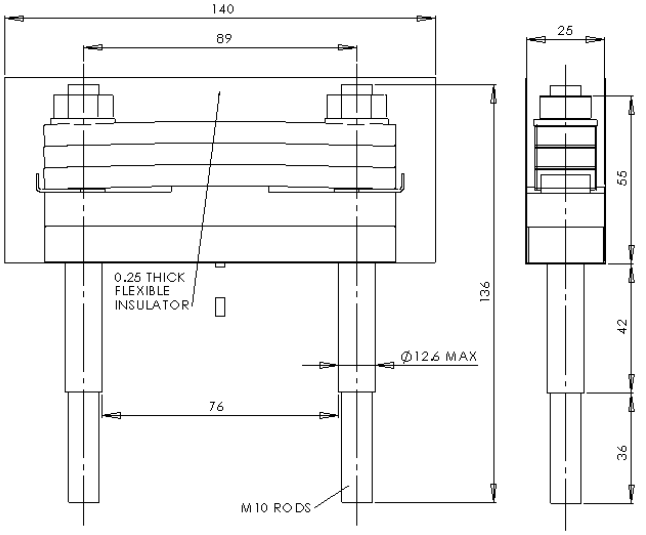

WC28 - CMK2000S114M

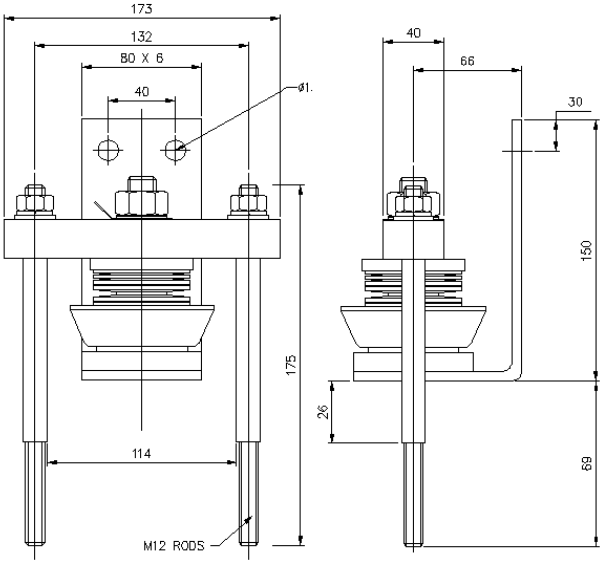

WC29 - CMK2000D114M

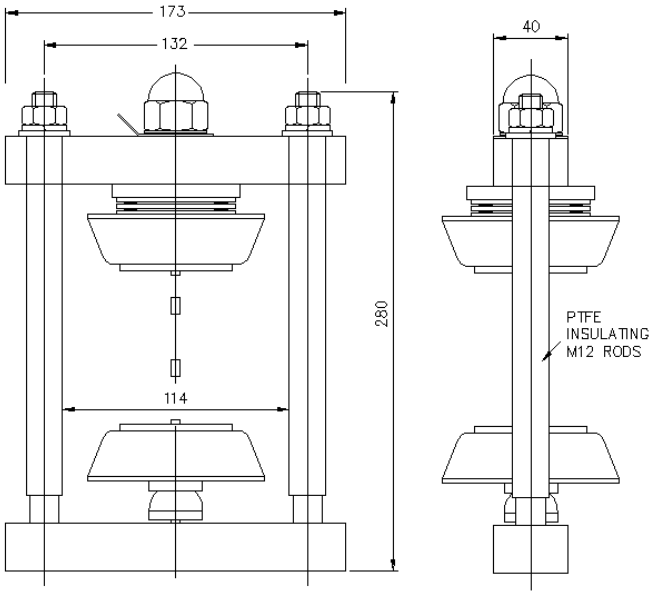

WC30 - CMK2500S114M

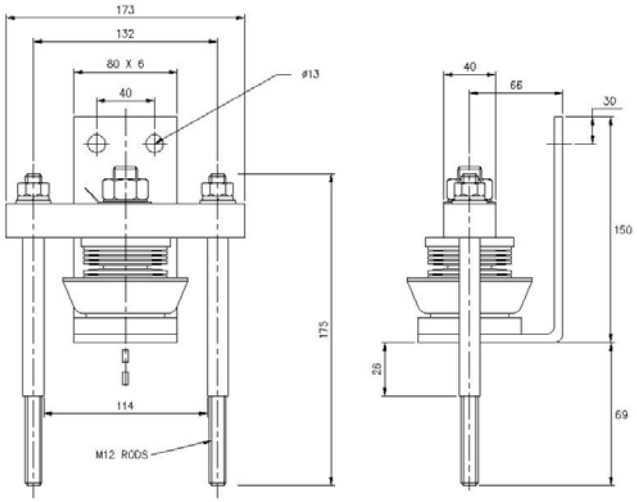

IXYS UK WESTCODE

Dimensions in mm and inches (1 mm = 0.0394“)

WC31 - CMK2500D114M

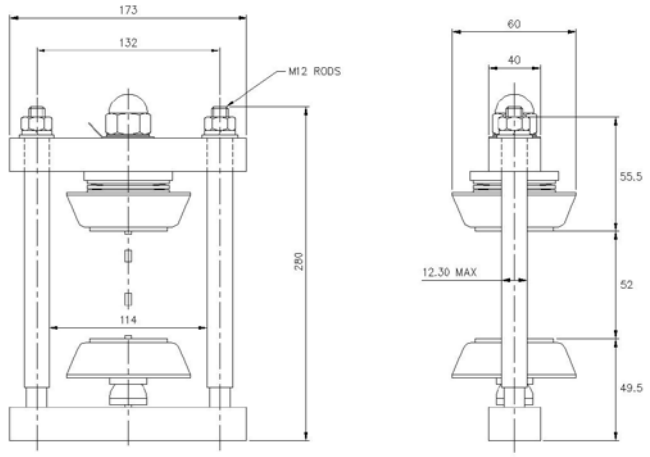

WC32 - CMK2500S116M

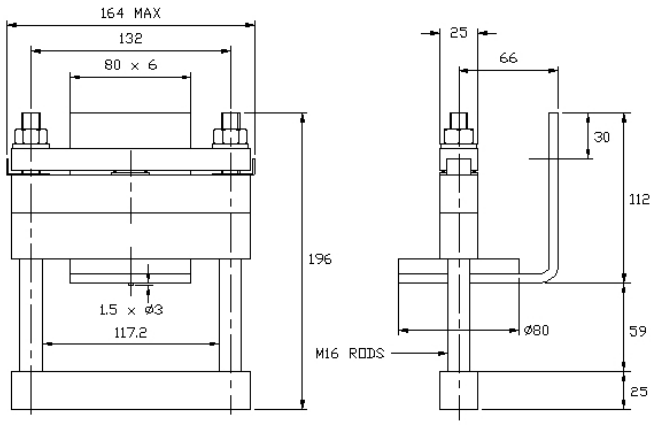

WC33 - CMK2500D116M

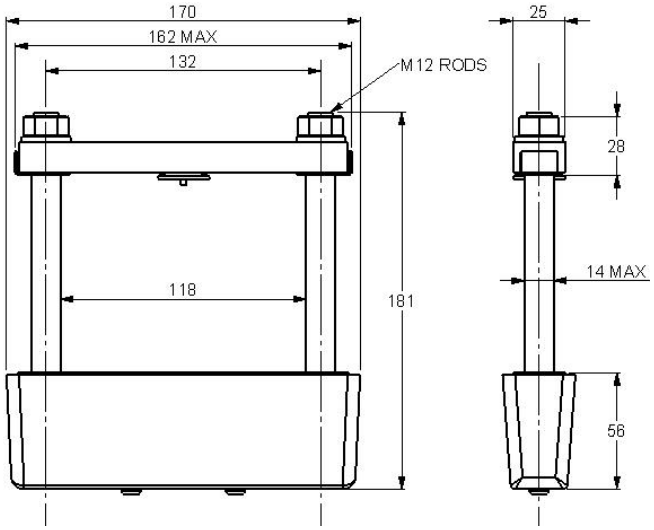

WC34 - CMK3000S116M

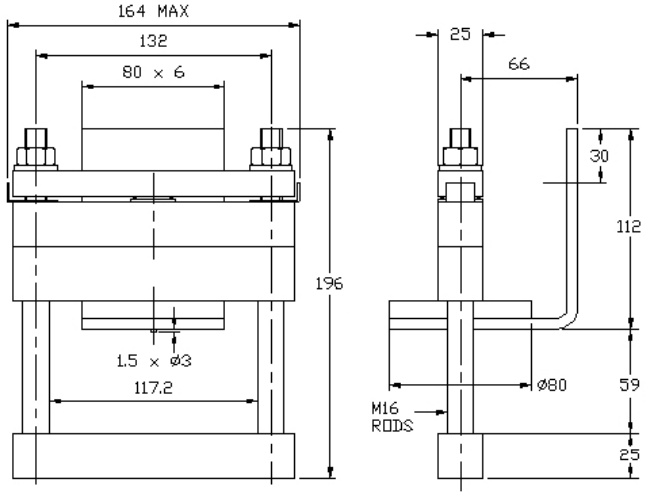

WC35 - CMK3000D116M

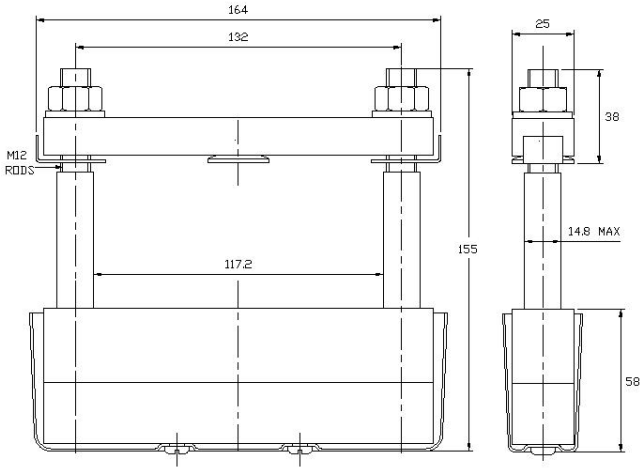

WC36 - CMK3500D116M

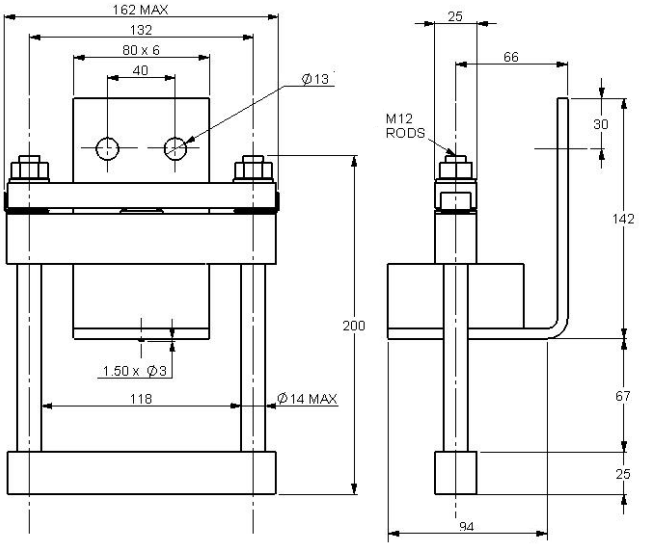

IXYS UK WESTCODE

Dimensions in mm and inches (1 mm = 0.0394“)

WC37 - CMK3500D116M

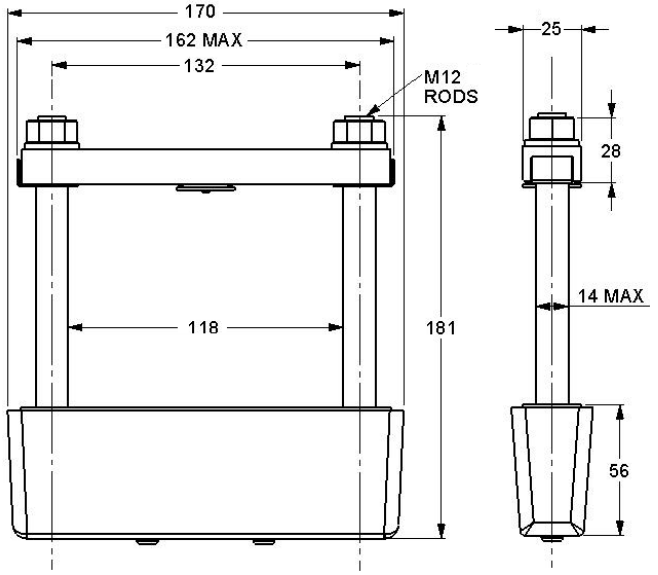

WC38 - CMK4000S116M

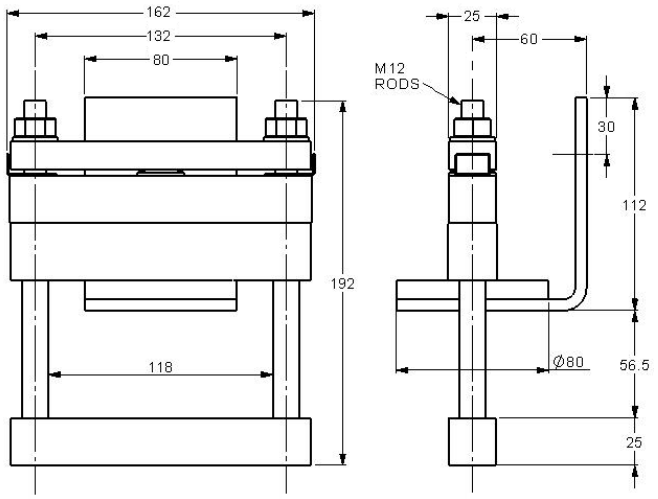

WC39 - CMK4000D116M

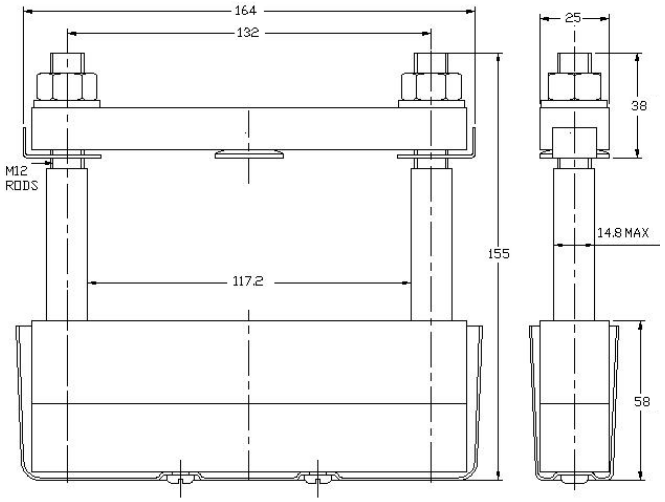

WC40 - CMK5000D128M

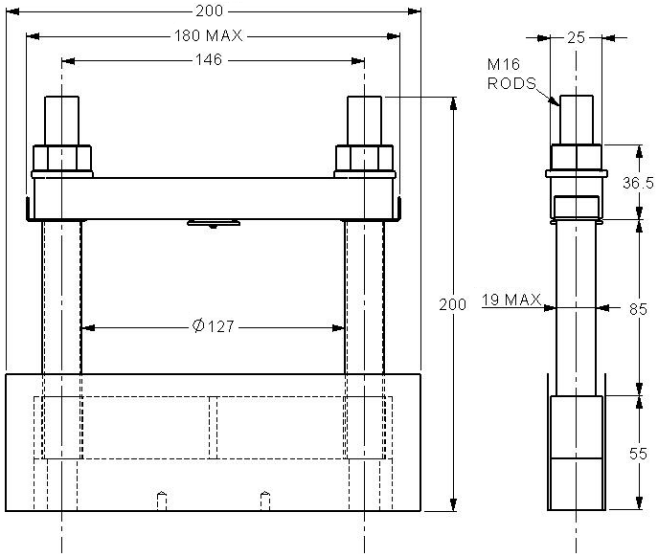

WC41 - CMK7000D128M

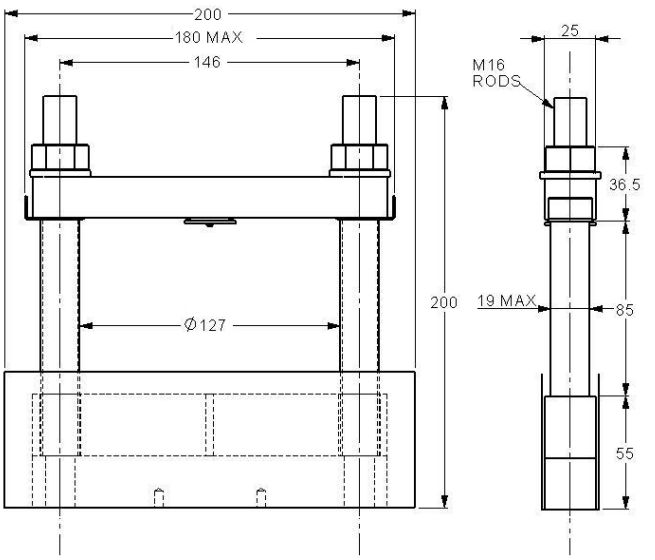

WC42 - CMK3060D140ML

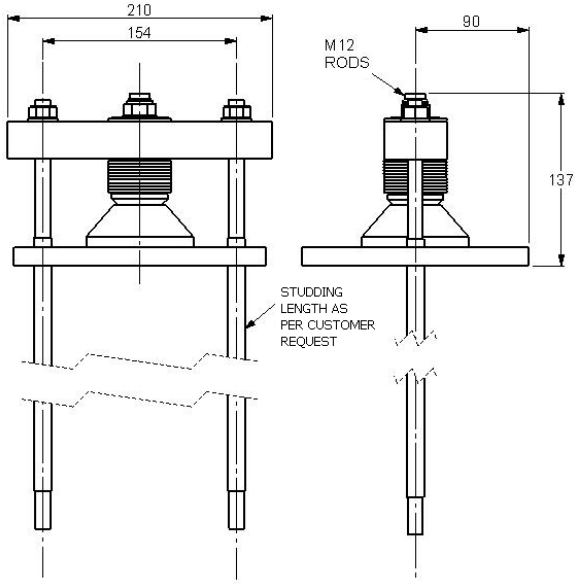

Outline drawings

Dimensions in mm and inches (1 mm = 0.0394“)

WC43 - CMK3060D140ML

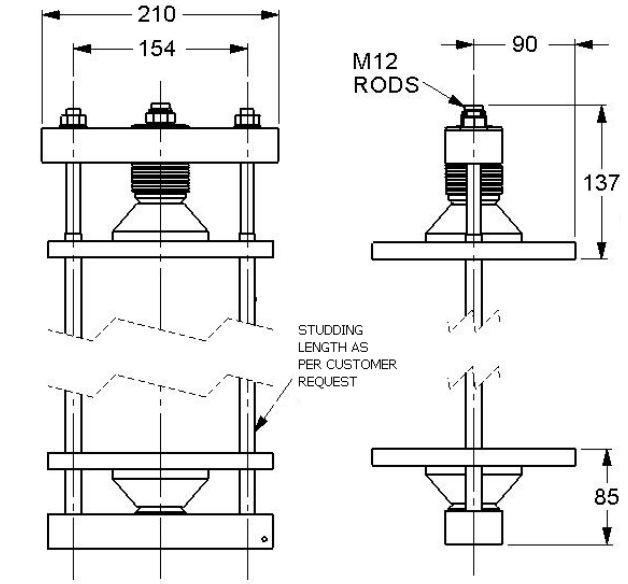

WC44 - CMK9000S160M

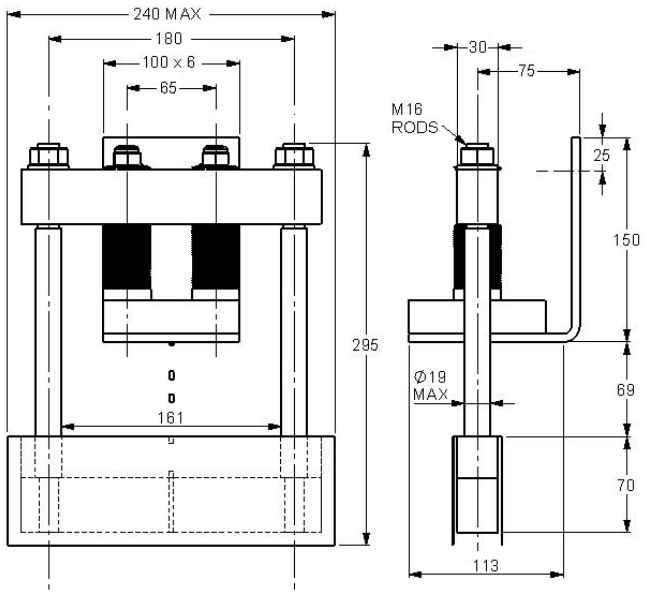

WC45 - CMK9000D160M

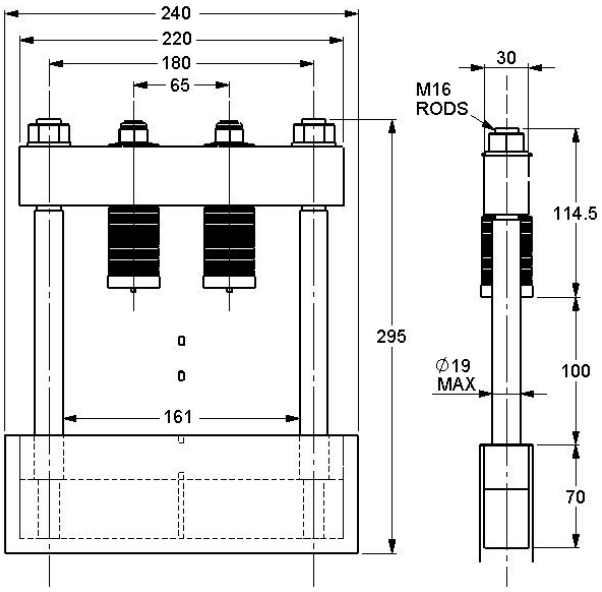

WC46 - CMK6120D180ML

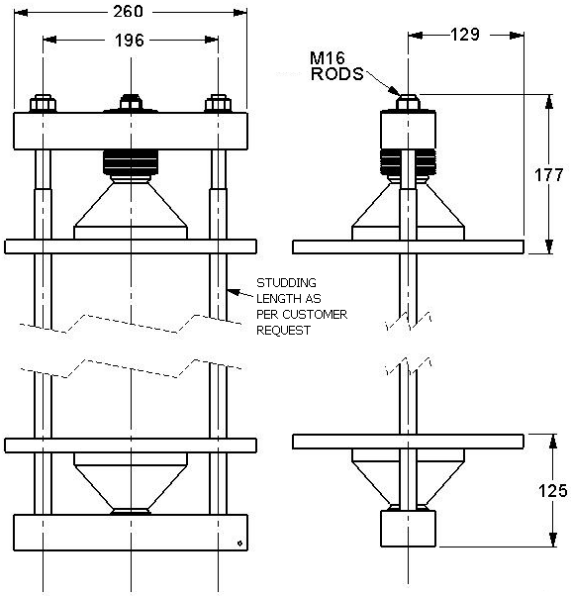

WC47 - CMK6120S180ML

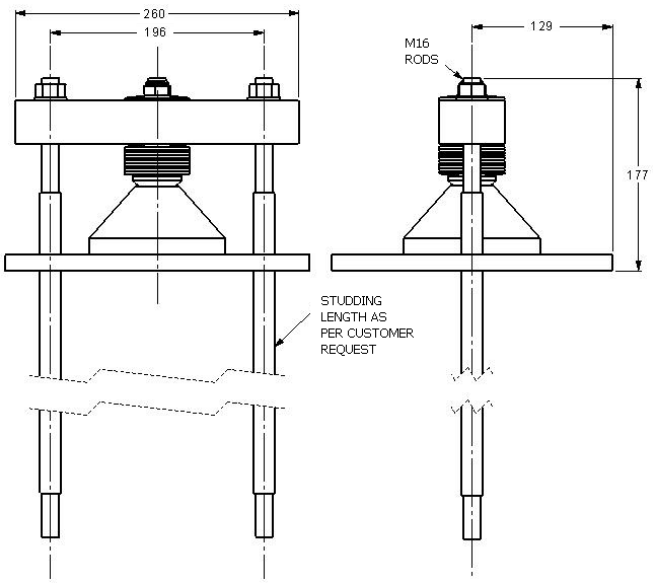

WC48 - CMK450B19M

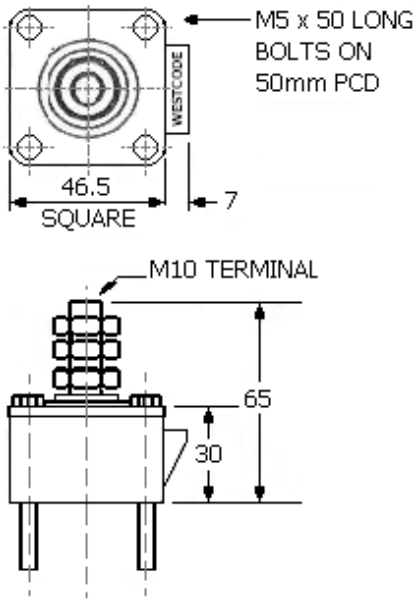

IXYS UK WESTCODE

Dimensions in mm and inches (1 mm = 0.0394“)

WC49 - CMK450B25M

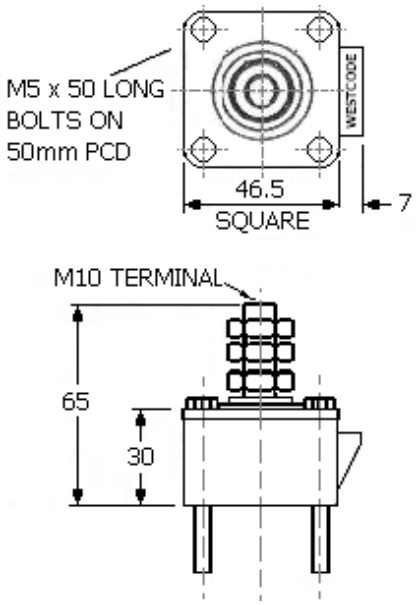

WC50 - CMK150B34M

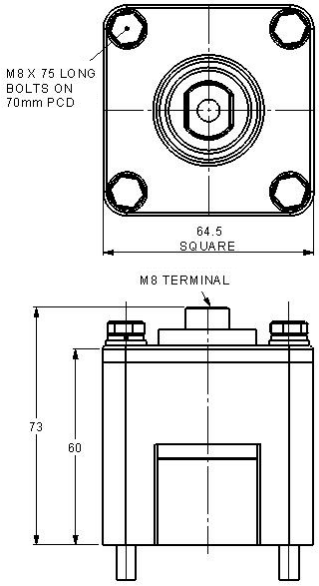

WC51 XSK1500DA076xxx

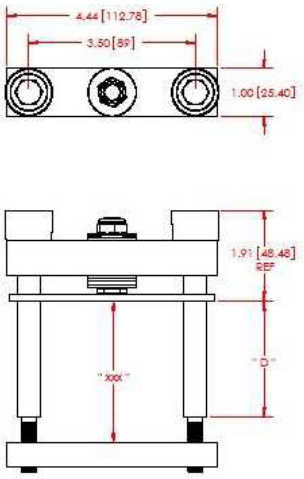

Notes:

1. DIMENSIONS IN INCHES [MILLIMETERS].
2. " Z " DIMENSION CAN BE CHANGED AS PER REQUIREMENT.
3. " D " DIMENSION CAN BE CHANGED AS PER REQUIREMENT.

WC52 XSK2000DA076xxx

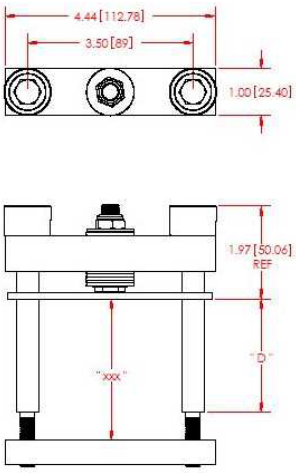

Notes:

1. DIMENSIONS IN INCHES [MILLIMETERS].
2. " Z " DIMENSION CAN BE CHANGED AS PER REQUIREMENT.
3. " D " DIMENSION CAN BE CHANGED AS PER REQUIREMENT.

WC53 XSK3000DA076xxx

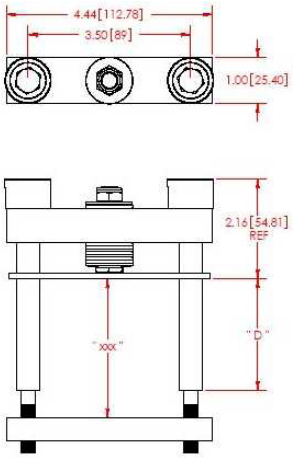

Notes:

1. DIMENSIONS IN INCHES [MILLIMETERS].
2. " Z " DIMENSION CAN BE CHANGED AS PER REQUIREMENT.
3. " D " DIMENSION CAN BE CHANGED AS PER REQUIREMENT.

WC54 XSK3400DA076xxx

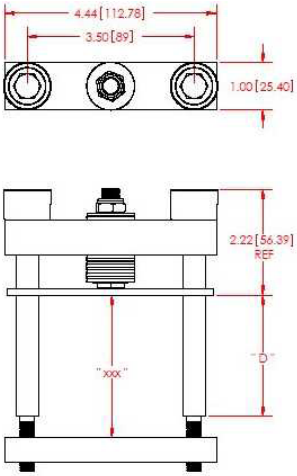

Notes:

1. DIMENSIONS IN INCHES [MILLIMETERS].
2. " Z " DIMENSION CAN BE CHANGED AS PER REQUIREMENT.
3. " D " DIMENSION CAN BE CHANGED AS PER REQUIREMENT.

Outline drawings

IXYS UK WESTCODE

Dimensions in mm and inches (1 mm = 0.0394“)

WC55 XSK3800DA116xxx

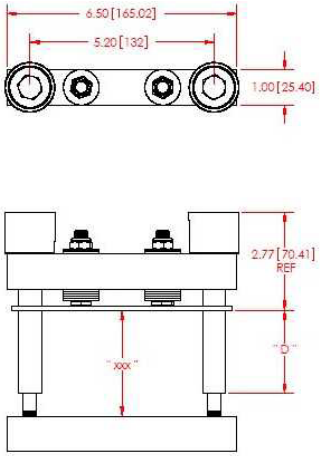

Notes:

1. DIMENSIONS IN INCHES [MILLIMETERS].
2. " Z " DIMENSION CAN BE CHANGED AS PER REQUIREMENT.
3. " D " DIMENSION CAN BE CHANGED AS PER REQUIREMENT.

WC56 XSK4400DA116xxx

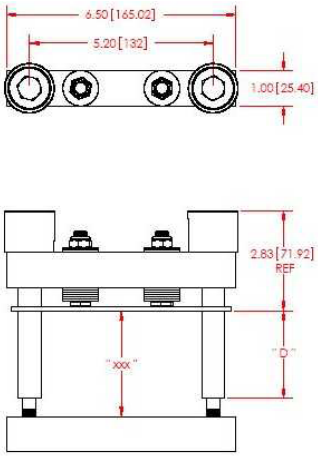

Notes:

1. DIMENSIONS IN INCHES [MILLIMETERS].
2. " Z " DIMENSION CAN BE CHANGED AS PER REQUIREMENT.
3. " D " DIMENSION CAN BE CHANGED AS PER REQUIREMENT.

WC57 XSK6000DA116xxx

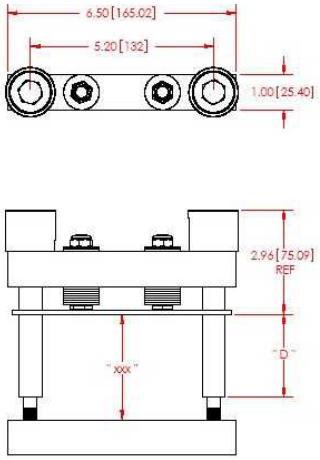

Notes:

1. DIMENSIONS IN INCHES [MILLIMETERS].
2. " Z " DIMENSION CAN BE CHANGED AS PER REQUIREMENT.
3. " D " DIMENSION CAN BE CHANGED AS PER REQUIREMENT.

WC58 DA

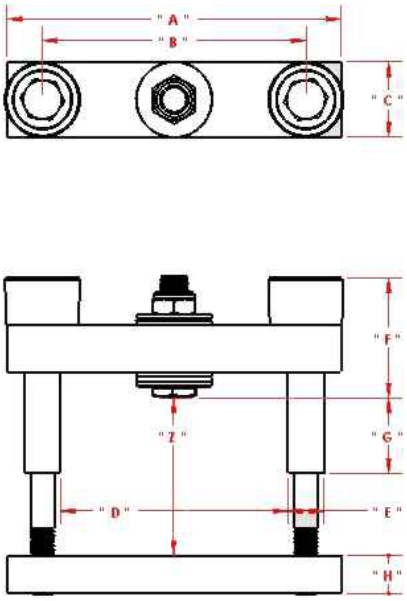

WC59 DT

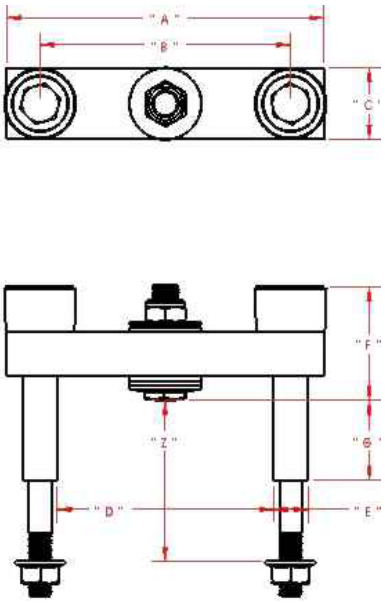

WC60 DF

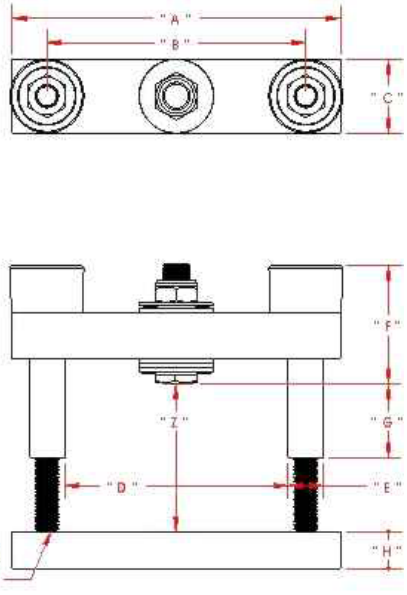

Outline drawings

IXYS UK WESTCODE

Dimensions in mm and inches (1 mm = 0.0394“)

WC61 DA

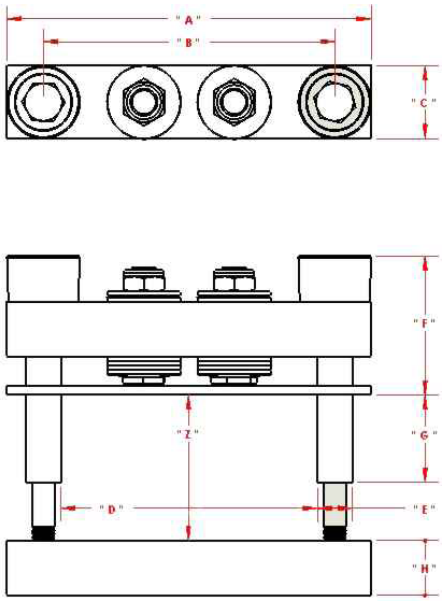

WC62 DT

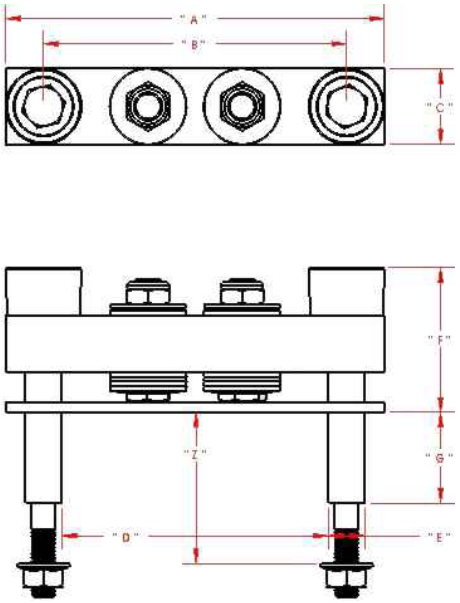

WC63 DF

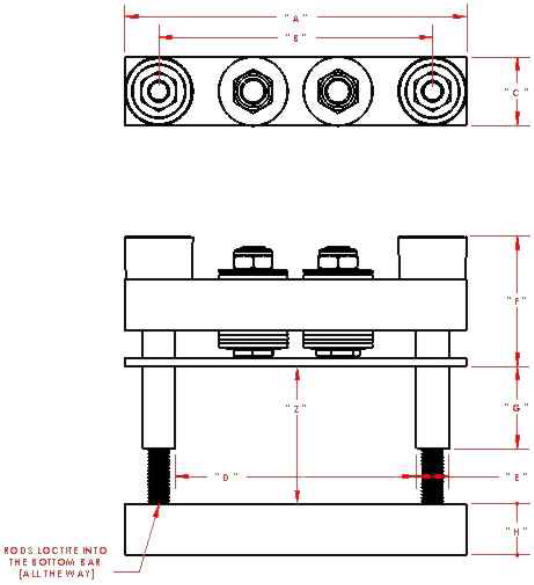

WC64 - 143A188

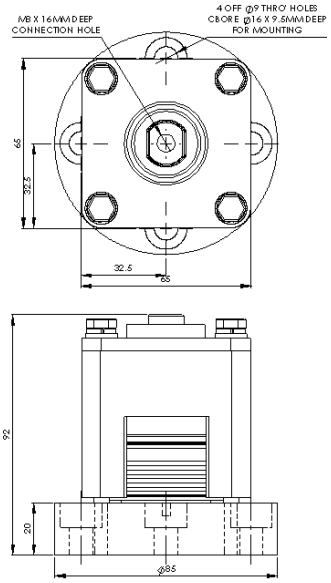

WC65 143A186

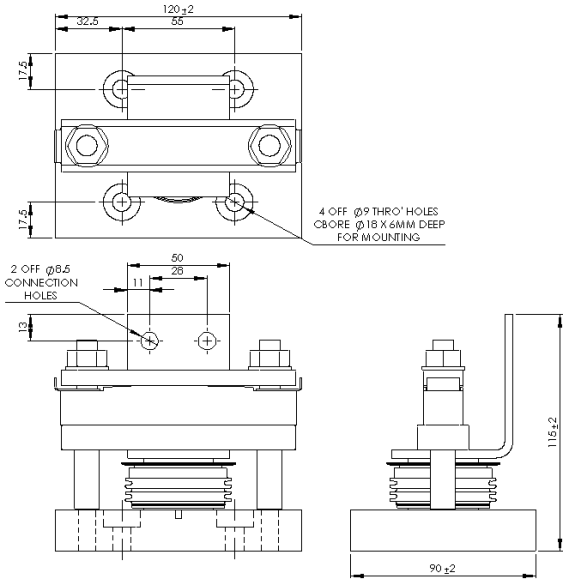

WC66 143A187

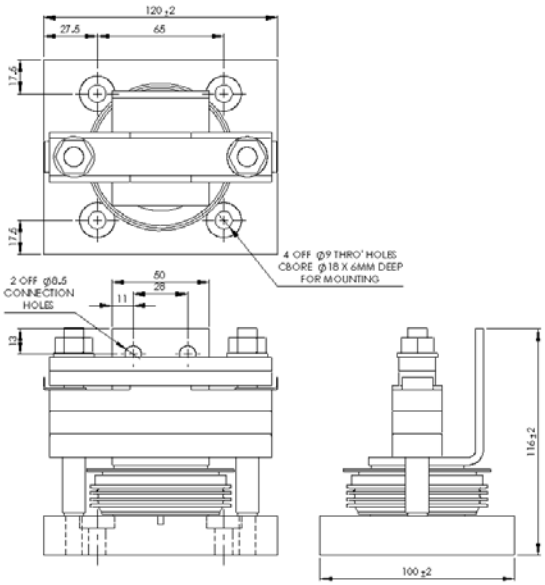

Outline drawings

IXYS UK WESTCODE

Dimensions in mm and inches (1 mm = 0.0394“)

WH1 - G FIN

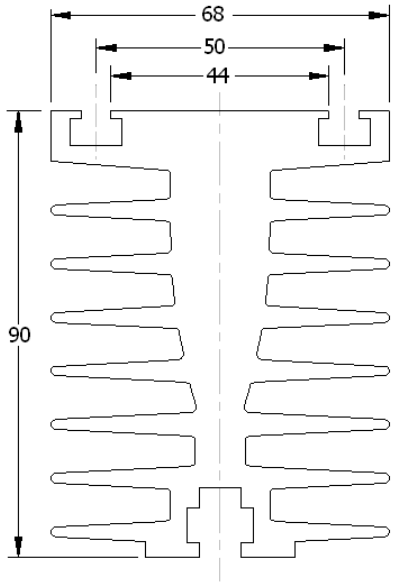

WH2 - GA FIN

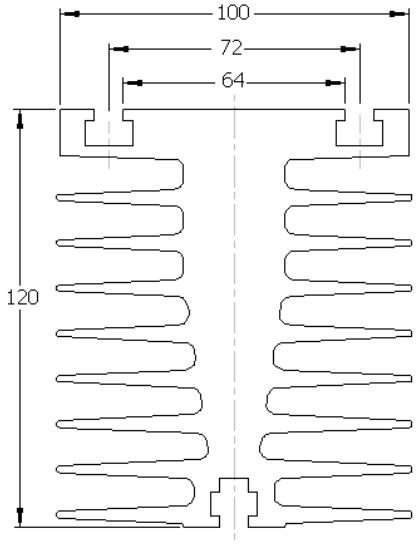

WH3 - H FIN

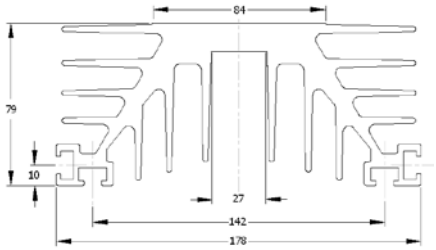

WH4 - T FIN

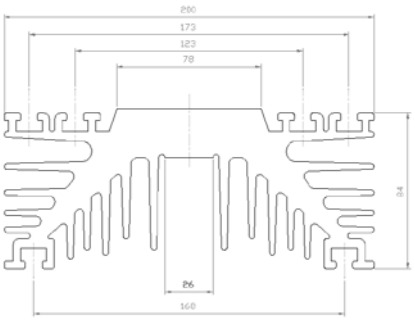

WH5 - TB FIN

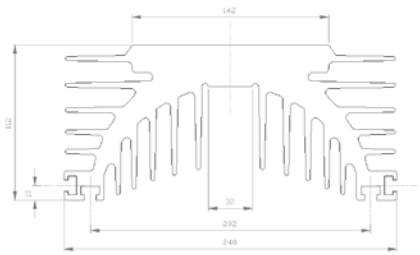

WH6 - TC FIN

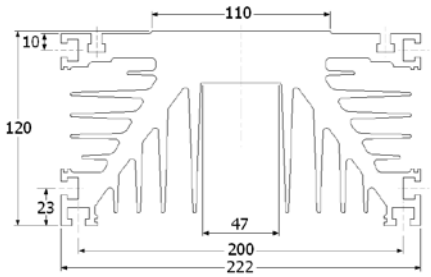

WH7 - LP100

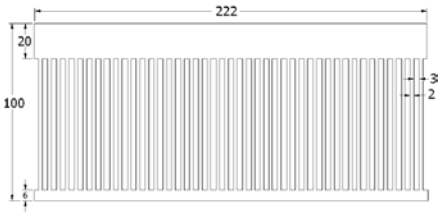

WH8 - WS46

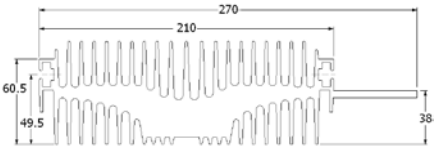

WH9 - WS30 - COPPER

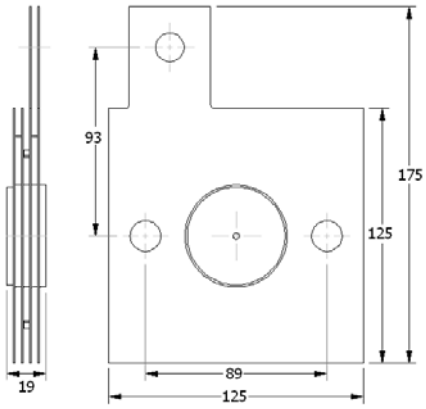

Outline drawings

IXYS UK WESTCODE

Dimensions in mm and inches (1 mm = 0.0394“)

WCL1 - LK COOLER

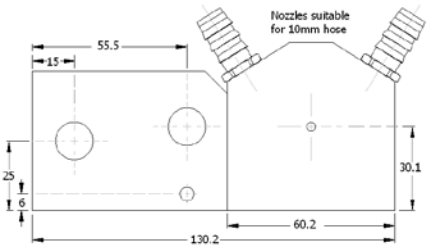

WCL2 - LKA COOLER

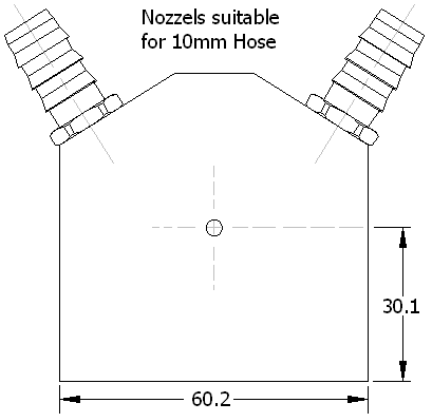

WCL3 - LKB COOLER

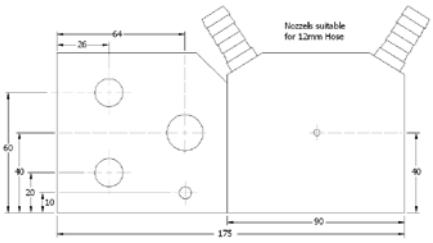

WCL4 - LKC COOLER

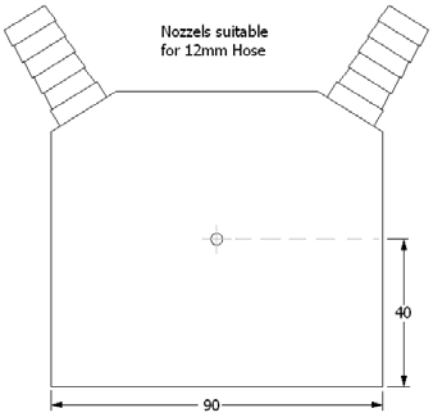

WCL5 - LKD COOLER

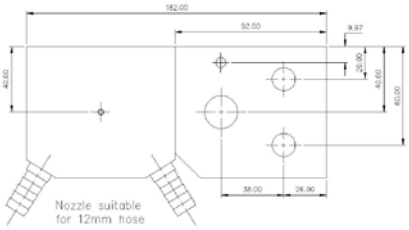

WCL6 - LKE COOLER

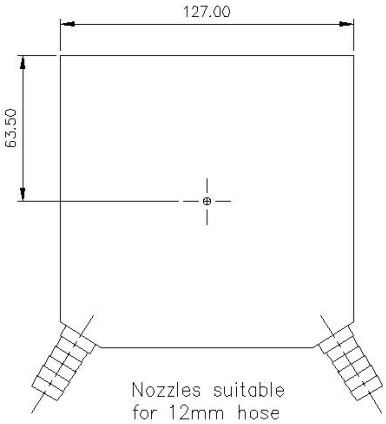

WCL7 LKF

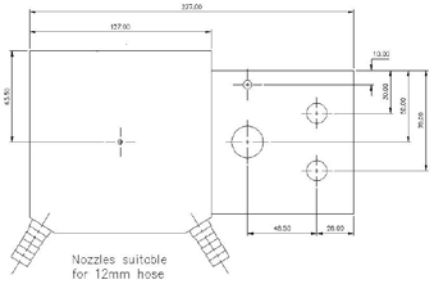

WCL8 WS27

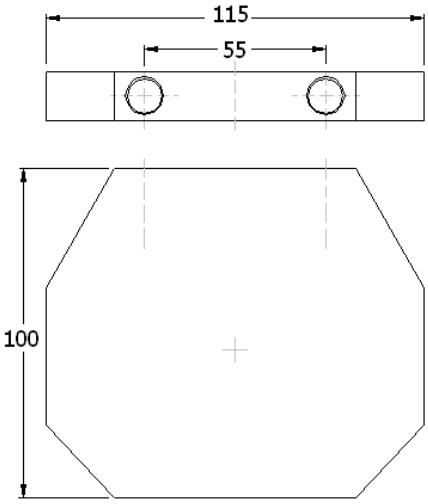

WCL9 - WS65 COOLER

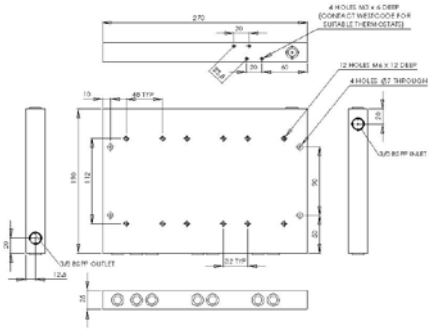

Outline drawings

IXYS UK WESTCODE

Dimensions in mm and inches (1 mm = 0.0394“)

WCL10 - WS69 COOLER

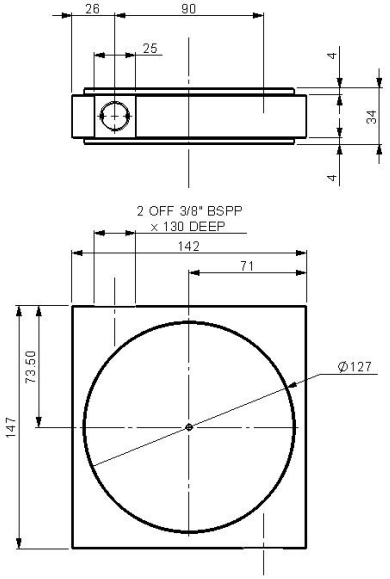

WCL11 - WS70 COOLER

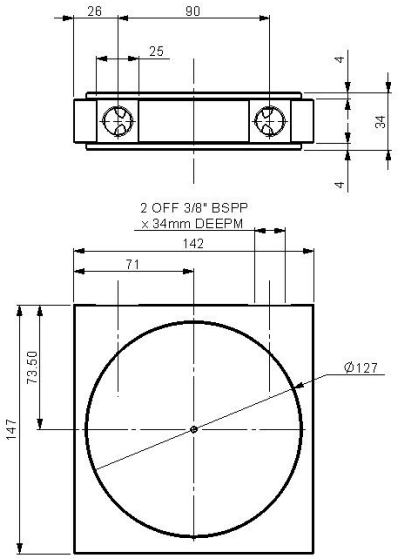

WCL12 - WS71-1 COOLER

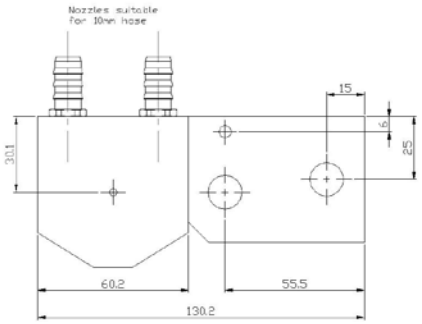

WCL13 - WS71-2 COOLER

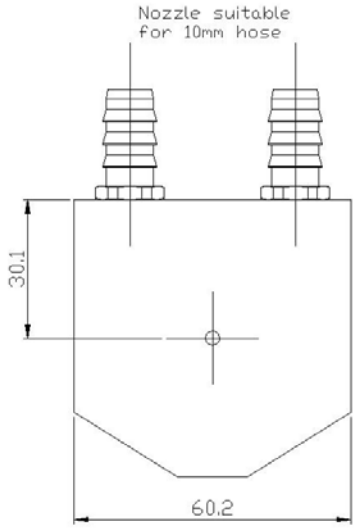

WCL14 - WS72-1 COOLER

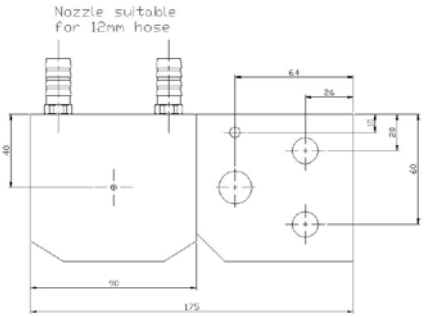

WCL15 - WS72-2 COOLER

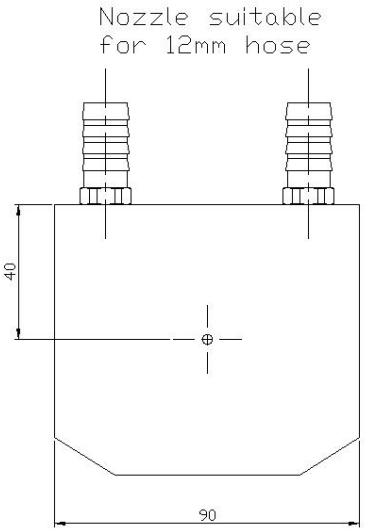

WCL16 XW127ExxxA

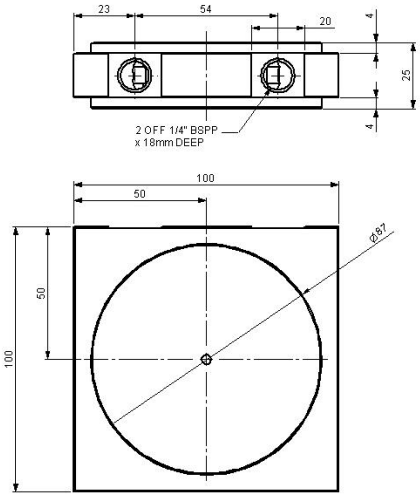

WCL17 XW127ExxxB

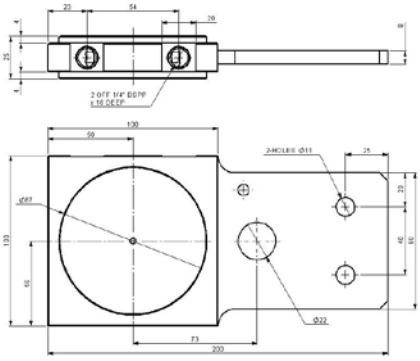

WCL18 XW180GN25A

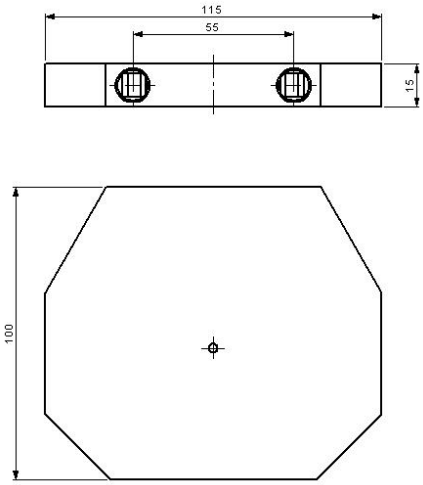

IXYS

Dimensions in mm and inches (1 mm = 0.0394“)

X003 TO-251 AA — Weight = 0.4 g

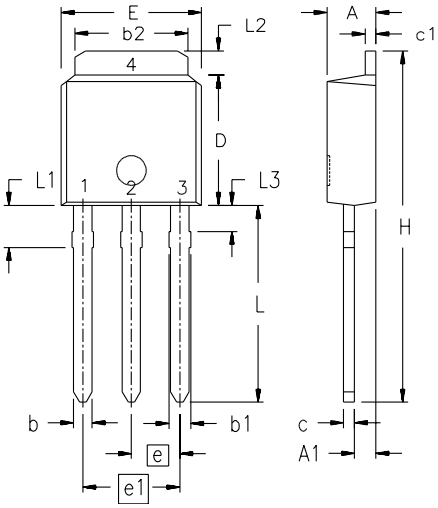

Dim.	Millimeters min	Millimeters max	Inches min	Inches max
A	2.19	2.38	0.086	0.094
A1	0.89	1.14	0.035	0.045
b	0.64	0.89	0.025	0.035
b1	0.76	1.14	0.030	0.045
b2	5.21	5.46	0.205	0.215
c	0.46	0.58	0.018	0.023
c1	0.46	0.58	0.018	0.023
D	5.97	6.22	0.235	0.245
E	6.35	6.73	0.250	0.265
e	2.28 BSC		0.090 BSC	
e1	4.57 BSC		0.180 BSC	
H	17.02	17.78	0.670	0.700
L	8.89	9.65	0.350	0.380
L1	1.91	2.28	0.075	0.090
L2	0.89	1.27	0.035	0.050
L3	1.15	1.52	0.045	0.060

X004 TO-252 AA (D PAK) — Weight = 0.3 g

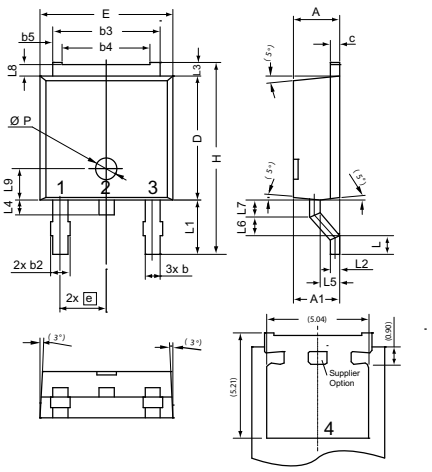

Dim.	Millimeters min	Millimeters max	Inches min	Inches max
A	2.20	2.40	0.087	0.094
A1	2.10	2.50	0.083	0.098
b	0.66	0.86	0.026	0.034
b2	-	0.96	-	0.038
b3	5.04	5.64	0.198	0.222
b4	4.34 BSC		0.171 BSC	
b5	0.50 BSC		0.020 BSC	
c	0.40	0.60	0.016	0.024
D	5.90	6.30	0.232	0.248
E	6.40	6.80	0.252	0.268
e	2.10	2.50	0.083	0.098
H	9.20	9.80	0.362	0.386
L	0.55	1.02	0.022	0.040
L1	2.50	2.90	0.098	0.114
L2	0.40	0.60	0.016	0.024
L3	0.50	0.90	0.020	0.035
L4	0.60	1.00	0.024	0.039
L5	0.82	1.22	0.032	0.048
L6	0.79	0.99	0.031	0.039
L7	0.81	1.01	0.032	0.040
L8	0.40	0.80	0.016	0.031
L9	1.50 BSC		0.059 BSC	
Ø P	1.00 BSC		0.039 BSC	

X005a TO-220 AB — Weight = 2 g

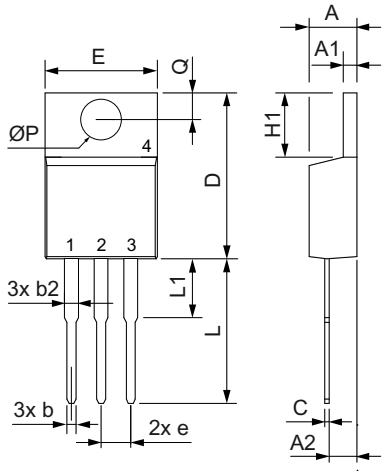

Dim.	Millimeters min	Millimeters max	Inches min	Inches max
A	4.32	4.82	0.170	0.190
A1	1.14	1.39	0.045	0.055
A2	2.29	2.79	0.090	0.110
b	0.64	1.01	0.025	0.040
b2	1.15	1.65	0.045	0.065
C	0.35	0.56	0.014	0.022
D	14.73	16.00	0.580	0.630
E	9.91	10.66	0.390	0.420
e	2.54 BSC		0.100 BSC	
H1	5.85	6.85	0.230	0.270
L	12.70	13.97	0.500	0.550
L1	2.79	5.84	0.110	0.230
Ø P	3.54	4.08	0.139	0.161
Q	2.54	3.18	0.100	0.125

X005b TO-220 AC — Weight = 2 g

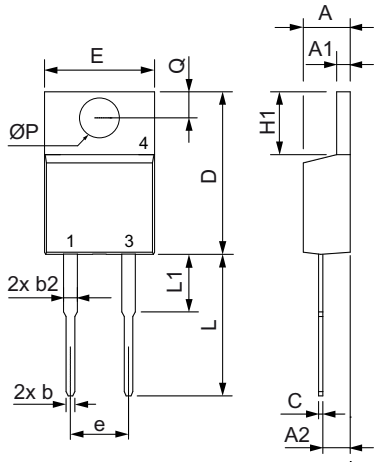

Dim.	Millimeters min	Millimeters max	Inches min	Inches max
A	4.32	4.82	0.170	0.190
A1	1.14	1.39	0.045	0.055
A2	2.29	2.79	0.090	0.110
b	0.64	1.01	0.025	0.040
b2	1.15	1.65	0.045	0.065
C	0.35	0.56	0.014	0.022
D	14.73	16.00	0.580	0.630
E	9.91	10.66	0.390	0.420
e	5.08 BSC		0.200 BSC	
H1	5.85	6.85	0.230	0.270
L	12.70	13.97	0.500	0.550
L1	2.79	5.84	0.110	0.230
Ø P	3.54	4.08	0.139	0.161
Q	2.54	3.18	0.100	0.125

X006 TO-220 (5) — Weight = 2 g

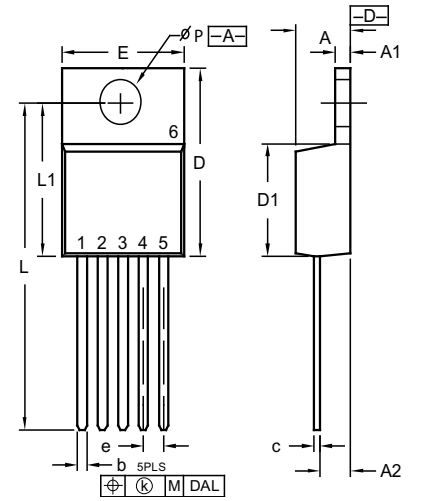

Dim.	Millimeters min	Millimeters max	Inches min	Inches max
A	4.32	4.82	0.170	0.190
A1	1.14	1.39	0.045	0.055
A2	2.29	2.79	0.090	0.110
b	0.64	1.01	0.025	0.040
c	0.38	0.64	0.015	0.025
D	14.73	15.75	0.580	0.620
D1	8.64	9.40	0.340	0.370
E	9.91	10.54	0.390	0.415
e	1.70 BSC		0.067 BSC	
k	0.00	0.36	0.000	0.014
L	25.27	26.54	0.995	1.045
L1	11.94	12.95	0.470	0.510
Ø P	3.53	3.96	0.139	0.156

X007a TO-220 ABFP — Weight = 2 g

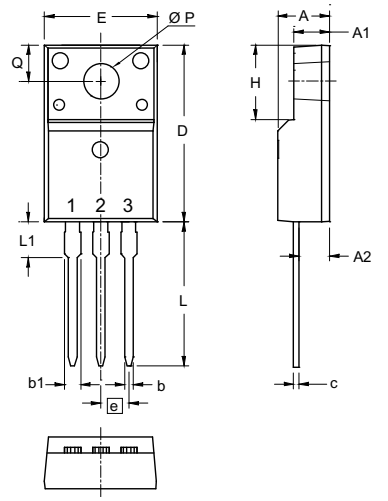

Dim.	Millimeters min	Millimeters max	Inches min	Inches max
A	4.50	4.90	0.177	0.193
A1	2.34	2.74	0.092	0.108
A2	2.56	2.96	0.101	0.117
b	0.70	0.90	0.028	0.035
b1	1.27	1.47	0.050	0.058
c	0.45	0.60	0.018	0.024
D	15.67	16.07	0.617	0.633
E	9.96	10.36	0.392	0.408
e	2.54 BSC		0.100 BSC	
H	6.48	6.88	0.255	0.271
L	12.68	13.28	0.499	0.523
L1	3.03	3.43	0.119	0.135
Ø P	3.08	3.28	0.121	0.129
Q	3.20	3.40	0.126	0.134

Outline drawings

IXYS

Dimensions in mm and inches (1 mm = 0.0394“)

X007b TO-220 ACFP — Weight = 2 g

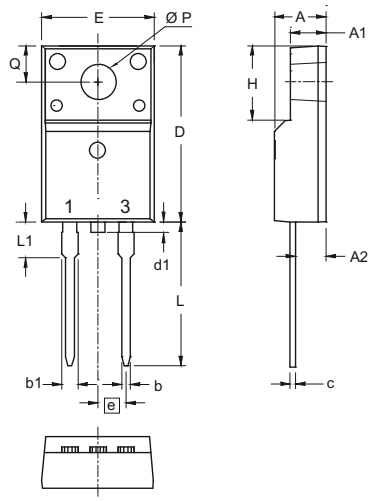

Dim.	Millimeters min	Millimeters max	Inches min	Inches max
A	4.50	4.90	0.177	0.193
A1	2.34	2.74	0.092	0.108
A2	2.56	2.96	0.101	0.117
b	0.70	0.90	0.028	0.035
b1	1.27	1.47	0.050	0.058
c	0.45	0.60	0.018	0.024
D	15.67	16.07	0.617	0.633
d1	0.00	1.10	0.000	0.043
E	9.96	10.36	0.392	0.408
e	2.54 BSC		0.100 BSC	
H	6.48	6.88	0.255	0.271
L	12.68	13.28	0.499	0.523
L1	3.03	3.43	0.119	0.135
Ø P	3.08	3.28	0.121	0.129
Q	3.20	3.40	0.126	0.134

X008a TO-262 I²PAK — Weight = 1.5 g

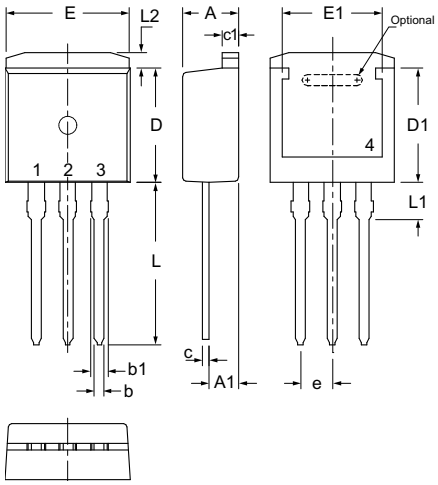

Dim.	Millimeters min	Millimeters max	Inches min	Inches max
A	4.30	4.70	0.169	0.185
A1	2.20	2.60	0.087	0.102
b	0.70	0.90	0.028	0.035
b1	1.37	1.57	0.054	0.062
c	0.45	0.60	0.018	0.024
c1	1.25	1.40	0.049	0.055
D	9.00	9.40	0.355	0.370
D1	7.20		0.284	
E	9.70	9.90	0.382	0.390
E1	7.00		0.276	
e	2.54 BSC		0.100 BSC	
L	12.88	13.28	0.507	0.523
L1	3.00	-	0.118	-
L2	1.00	1.40	0.039	0.055

X008b TO-262 I²PAK — Weight = 1.5 g

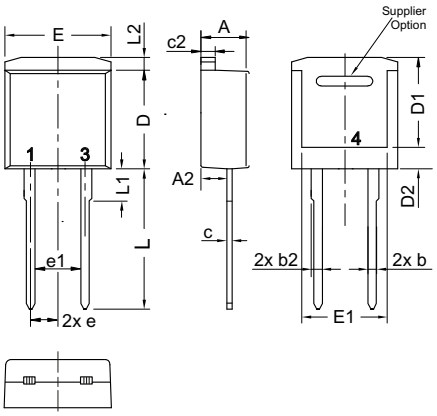

Dim.	Millimeters min	Millimeters max	Inches min	Inches max
A	4.06	4.83	0.160	0.190
A2	2.41		0.095	
b	0.51	0.99	0.020	0.039
b2	1.14	1.40	0.045	0.055
c	0.40	0.74	0.016	0.029
c2	1.14	1.40	0.045	0.055
D	8.38	9.40	0.330	0.370
D1	8.00	8.89	0.315	0.350
D2	2.5		0.098	
E	9.65	10.41	0.380	0.410
E1	6.22	8.50	0.245	0.335
e	2.54 BSC		0.100 BSC	
e1	4.28		0.169	
L	13.00	13.60	0.512	0.535
L1	2.90	3.10	0.114	0.122
L2	1.02	1.68	0.040	0.066
All dimensions conform with and/or within JEDEC standard				

X009a PLUS220™ — Weight = 2.5 g

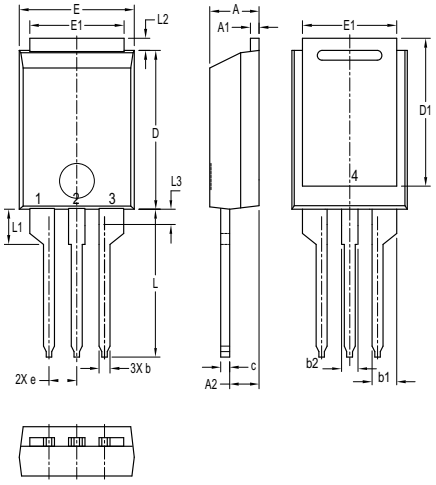

Dim.	Millimeters min	Millimeters max	Inches min	Inches max
A	4.30	4.70	0.169	0.185
A1	0.70	0.90	0.028	0.035
A2	2.50	3.00	0.098	0.118
b	0.90	1.20	0.035	0.047
b1	2.03	2.41	0.080	0.095
b2	1.37	1.63	0.054	0.064
c	0.70	0.90	0.028	0.035
D	14.00	15.00	0.551	0.591
D1	13.00	13.70	0.512	0.539
E	10.00	11.00	0.394	0.433
E1	8.40	8.80	0.331	0.346
e	2.54 BSC		0.100 BSC	
L	13.00	14.00	0.512	0.551
L1	3.00	3.50	0.118	0.138
L2	0.90	1.30	0.035	0.051
L3	1.20	1.50	0.047	0.059

X010a ISOPLUS220™ AB — Weight = 2.5 g

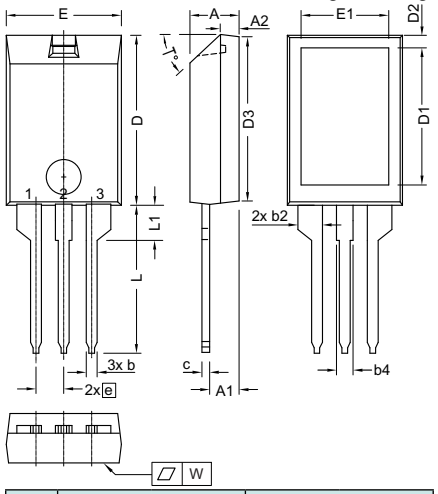

Dim.	Millimeters min	Millimeters max	Inches min	Inches max
A	4.00	5.00	0.157	0.197
A1	2.50	3.00	0.098	0.118
A2	1.60	1.80	0.063	0.071
b	0.90	1.30	0.035	0.051
b2	2.35	2.55	0.093	0.100
b4	1.25	1.65	0.049	0.065
c	0.70	1.00	0.028	0.039
D	15.00	16.00	0.591	0.630
D1	12.00	13.00	0.472	0.512
D2	1.10	1.50	0.043	0.059
D3	14.90	15.50	0.587	0.610
E	10.00	11.00	0.394	0.433
E1	7.50	8.50	0.295	0.335
e	2.54 BSC		0.100 BSC	
L	13.00	14.50	0.512	0.571
L1	3.00	3.50	0.118	0.138
T°	42.5	47.5		
W	-	0.10	-	0.004

X010b ISOPLUS220™ AC — Weight = 2.5 g

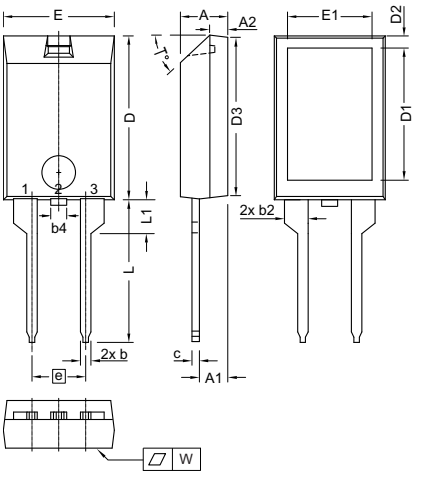

Dim.	Millimeters min	Millimeters max	Inches min	Inches max
A	4.00	5.00	0.157	0.197
A1	2.50	3.00	0.098	0.118
A2	1.60	1.80	0.063	0.071
b	0.90	1.30	0.035	0.051
b2	1.25	1.65	0.049	0.065
b4	2.35	2.55	0.093	0.100
c	0.70	1.00	0.028	0.039
D	15.00	16.00	0.591	0.630
D1	12.00	13.00	0.472	0.512
D2	1.10	1.50	0.043	0.059
D3	14.90	15.50	0.587	0.610
E	10.00	11.00	0.394	0.433
E1	7.50	8.50	0.295	0.335
e	5.08 BSC		0.200 BSC	
L	13.00	14.50	0.512	0.571
L1	3.00	3.50	0.118	0.138
T°	42.5	47.5		
W	-	0.10	-	0.004

Outline drawings

IXYS

Dimensions in mm and inches (1 mm = 0.0394“)

X011a TO-263 AA (D²PAK) Weight = 1.5 g

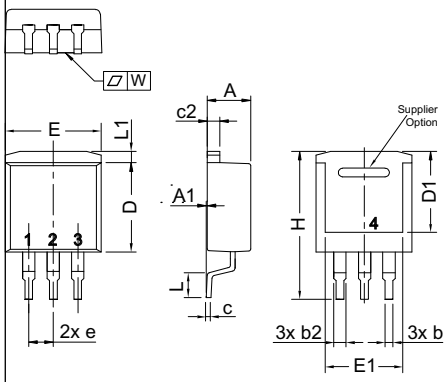

Dim.	Millimeter		Inches	
	min	max	min	max
A	4.06	4.83	0.160	0.190
A1	typ. 0.10		typ. 0.004	
b	0.51	0.99	0.020	0.039
b2	1.14	1.40	0.045	0.055
c	0.40	0.74	0.016	0.029
c2	1.14	1.40	0.045	0.055
D	8.38	9.40	0.330	0.370
D1	8.00	8.89	0.315	0.350
E	9.65	10.41	0.380	0.410
E1	6.22	8.13	0.245	0.320
e	2,54 BSC		0,100 BSC	
H	14.61	15.88	0.575	0.625
L	1.78	2.79	0.070	0.110
L1	1.02	1.68	0.040	0.066
W	typ. 0.02	0.040	typ. 0.0008	0.002

X011b TO-263 AB (D²PAK) Weight = 1.5 g

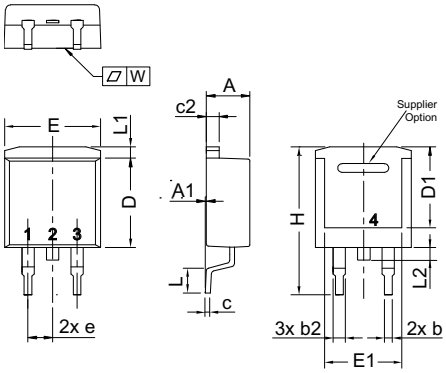

Dim.	Millimeter		Inches	
	min	max	min	max
A	4.06	4.83	0.160	0.190
A1	typ. 0.10		typ. 0.004	
b	0.51	0.99	0.020	0.039
b2	1.14	1.40	0.045	0.055
c	0.40	0.74	0.016	0.029
c2	1.14	1.40	0.045	0.055
D	8.38	9.40	0.330	0.370
D1	8.00	8.89	0.315	0.350
E	9.65	10.41	0.380	0.410
E1	6.22	8.13	0.245	0.320
e	2,54 BSC		0,100 BSC	
H	14.61	15.88	0.575	0.625
L	1.78	2.79	0.070	0.110
L1	1.02	1.68	0.040	0.066
W	typ. 0.02	0.040	typ. 0.0008	0.002

X011c TO-263 AB (D²PAK) Weight = ?? g

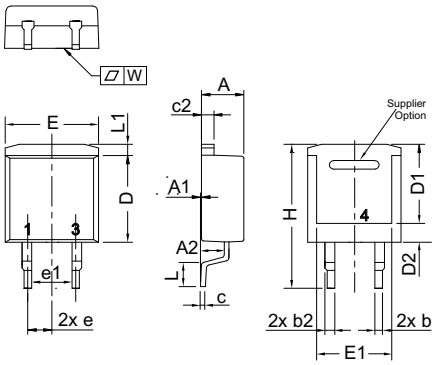

Dim.	Millimeters		Inches	
	min	max	min	max
A	4.06	4.83	0.160	0.190
A1	typ 0.10		typ 0.004	
A2	2.41		0.095	
b	0.51	0.99	0.020	0.039
b2	1.14	1.40	0.045	0.055
c	0.40	0.74	0.016	0.029
c2	1.14	1.40	0.045	0.055
D	8.38	9.40	0.330	0.370
D1	8.00	8.89	0.315	0.350
D2	2.5		0.098	
E	9.65	10.41	0.380	0.410
E1	6.22	8.50	0.245	0.335
e	2.54 BSC		0.100 BSC	
e1	4.28		0.169	
H	14.61	15.88	0.575	0.625
L	1.78	2.79	0.070	0.110
L2	1.02	1.68	0.040	0.066
W	typ 0.02	0.040	typ 0.0008	0.002
All dimensions conform with and/or within JEDEC standard				

X012a TO-263 (5) Weight = 1.5 g

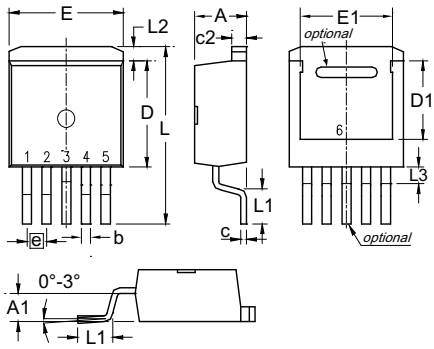

Dim.	Millimeter		Inches	
	min	max	min	max
A	4.20	4.80	0.160	0.190
A1	2.10	2.70	0.083	0.106
b	0.60	0.99	0.024	0.039
c	0.40	0.70	0.016	0.028
c2	1.20	1.40	0.047	0.055
D	8.80	9.50	0.346	0.374
D1	6.60	7.20	0.260	0.283
E	9.65	10.30	0.380	0.406
E1	7.50	8.20	0.295	0.323
e	1.70 BSC		0.067 BSC	
L	14.80	15.80	0.583	0.622
L1	2.24	2.84	0.088	0.112
L2	1.00	1.40	0.039	0.067
L3	1.20	1.70	0.047	0.067

X012b TO-263 (7) Weight = 2.5 g
c) middle leg cut

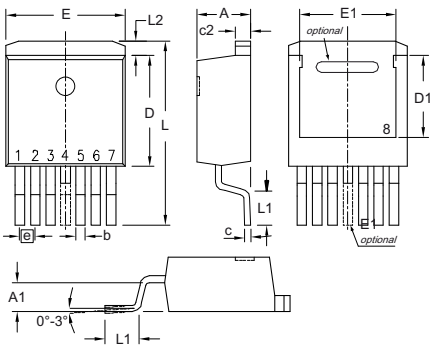

Dim.	Millimeter		Inches	
	min	max	min	max
A	4.20	4.60	0.165	0.181
A1	2.45	2.75	0.096	0.108
b	0.65	0.90	0.026	0.035
c	0.40	0.60	0.016	0.024
c2	1.14	1.40	0.045	0.055
D	8.38	8.64	0.330	0.340
D1	6.10	6.35	0.240	0.250
E	10.00	10.30	0.394	0.406
E1	7.34	8.00	0.290	0.315
e	1.27 BSC		0.050 BSC	
L	14.73	15.75	0.580	0.620
L1	2.24	2.84	0.088	0.112
L2	1.35	1.55	0.053	0.061

X013 PLUS220™ (SMD) Weight = 2 g

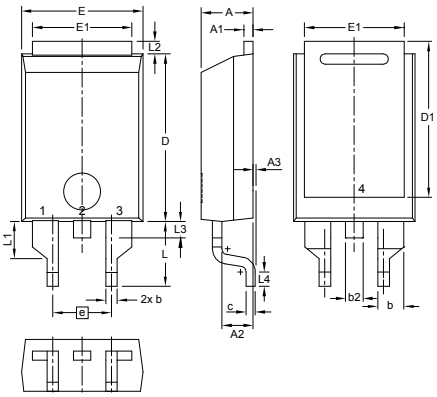

Dim.	Millimeter		Inches	
	min	max	min	max
A	4.30	4.70	0.169	0.185
A1	0.70	0.90	0.028	0.035
A2	2.50	3.00	0.098	0.118
A3	0.00	0.25	0.000	0.010
b	0.90	1.20	0.035	0.047
b1	2.03	2.41	0.080	0.095
b2	1.37	1.63	0.054	0.064
c	0.70	0.90	0.028	0.035
D	14.00	15.00	0.551	0.591
D1	13.00	13.70	0.512	0.539
E	10.00	11.00	0.394	0.433
E1	8.40	8.80	0.331	0.346
e	5.08 BSC		0.200 BSC	
L	5.30	5.80	0.209	0.228
L1	3.00	3.50	0.118	0.138
L2	0.90	1.30	0.035	0.051
L3	1.20	1.50	0.047	0.059
L4	1.00	1.50	0.039	0.059

Outline drawings

IXYS

Dimensions in mm and inches (1 mm = 0.0394“)

X014a TO-247 AD — Weight = 6 g

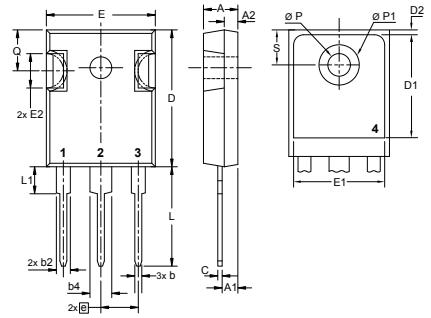

Dim.	Millimeter min	Millimeter max	Inches min	Inches max
A	4.70	5.30	0.185	0.209
A1	2.21	2.59	0.087	0.102
A2	1.50	2.49	0.059	0.098
b	0.99	1.40	0.039	0.055
b2	1.65	2.39	0.065	0.094
b4	2.59	3.43	0.102	0.135
c	0.38	0.89	0.015	0.035
D	20.79	21.45	0.819	0.845
D1	13.07	-	0.515	-
D2	0.51	1.35	0.020	0.053
E	15.48	16.24	0.610	0.640
E1	13.45	-	0.53	-
E2	4.31	5.48	0.170	0.216
e	5.45 BSC		0.215 BSC	
L	19.80	20.30	0.078	0.800
L1	-	4.49	-	0.177
Ø P	3.55	3.65	0.140	0.144
Ø P1	-	7.39	-	0.290
Q	5.38	6.19	0.212	0.244
S	6.14 BSC		0.242 BSC	

X014b TO-247 AD — Weight = 6 g

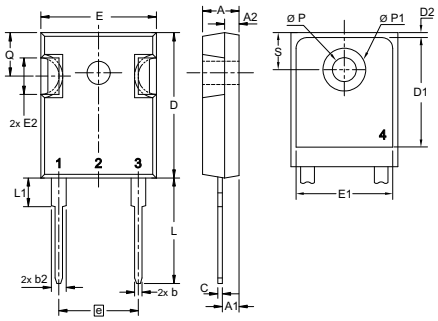

Dim.	Millimeter min	Millimeter max	Inches min	Inches max
A	4.70	5.30	0.185	0.209
A1	2.21	2.59	0.087	0.102
A2	1.50	2.49	0.059	0.098
b	0.99	1.40	0.039	0.055
b2	1.65	2.39	0.065	0.094
b4	2.59	3.43	0.102	0.135
c	0.38	0.89	0.015	0.035
D	20.79	21.45	0.819	0.845
D1	13.07	-	0.515	-
D2	0.51	1.35	0.020	0.053
E	15.48	16.24	0.610	0.640
E1	13.45	-	0.530	-
E2	4.31	5.48	0.170	0.216
e	10.90 BSC		0.430 BSC	
L	19.80	20.30	0.078	0.800
L1	-	4.49	-	0.177
Ø P	3.55	3.65	0.140	0.144
Ø P1	-	7.39	-	0.290
Q	5.38	6.19	0.212	0.244
S	6.14 BSC		0.242 BSC	

X015a PLUS247™ — Weight = 7 g

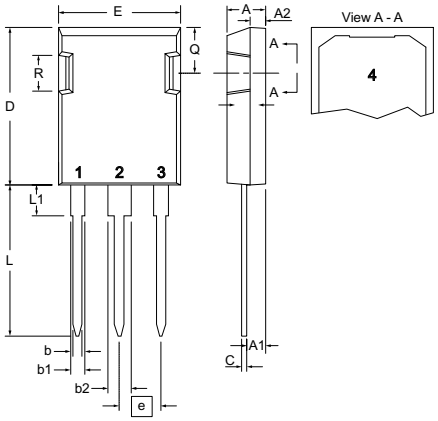

Dim.	Millimeter min	Millimeter max	Inches min	Inches max
A	4.83	5.21	0.190	0.205
A1	2.29	2.54	0.090	0.100
A2	1.91	2.16	0.075	0.085
b	1.14	1.40	0.045	0.055
b1	1.90	2.10	0.075	0.084
b2	2.92	3.12	0.115	0.123
C	0.60	0.80	0.024	0.031
D	20.80	21.34	0.819	0.840
E	15.75	16.13	0.620	0.635
e	5.45 BSC		0.215 BSC	
L	19.80	20.30	0.078	0.800
L1	3.80	4.30	0.150	0.170
Q	5.60	6.20	0.220	0.244
R	4.32	4.83	0.170	0.190

X016a ISOPLUS247™ — Weight = 4.5 g

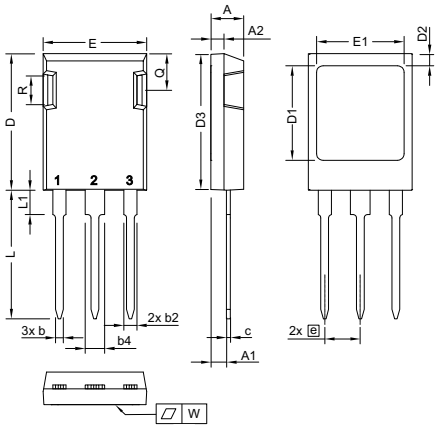

Dim.	Millimeter min	Millimeter max	Inches min	Inches max
A	4.83	5.21	0.190	0.205
A1	2.29	2.54	0.090	0.100
A2	1.91	2.16	0.075	0.085
b	1.14	1.40	0.045	0.055
b2	1.91	2.20	0.075	0.087
b4	2.92	3.24	0.115	0.128
c	0.61	0.83	0.024	0.033
D	20.80	21.34	0.819	0.840
D1	15.75	16.26	0.620	0.640
D2	1.65	2.15	0.065	0.085
D3	20.30	20.70	0.799	0.815
E	15.75	16.13	0.620	0.635
E1	13.21	13.72	0.520	0.540
e	5.45 BSC		0.215 BSC	
L	19.81	20.60	0.780	0.811
L1	3.81	4.38	0.150	0.172
Q	5.59	6.20	0.220	0.244
R	4.25	5.50	0.167	0.217
W	-	0.10	-	0.004

X016b ISOPLUS247™ — Weight = 4.5 g

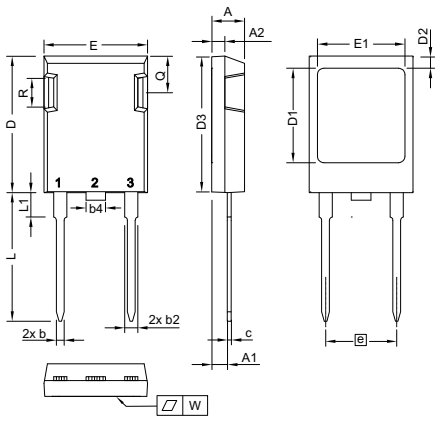

Dim.	Millimeter min	Millimeter max	Inches min	Inches max
A	4.83	5.21	0.190	0.205
A1	2.29	2.54	0.090	0.100
A2	1.91	2.16	0.075	0.085
b	1.14	1.40	0.045	0.055
b2	1.91	2.20	0.075	0.087
b4	2.92	3.24	0.115	0.128
c	0.61	0.83	0.024	0.033
D	20.80	21.34	0.819	0.840
D1	15.75	16.26	0.620	0.640
D2	1.65	2.15	0.065	0.085
D3	20.30	20.70	0.799	0.815
E	15.75	16.13	0.620	0.635
E1	13.21	13.72	0.520	0.540
e	10.90 BSC		0.430 BSC	
L	19.81	20.60	0.780	0.811
L1	3.81	4.38	0.150	0.172
Q	5.59	6.20	0.220	0.244
R	4.25	5.50	0.167	0.217
W	-	0.10	-	0.004

X016c ISO247™ — Weight = 4.5 g

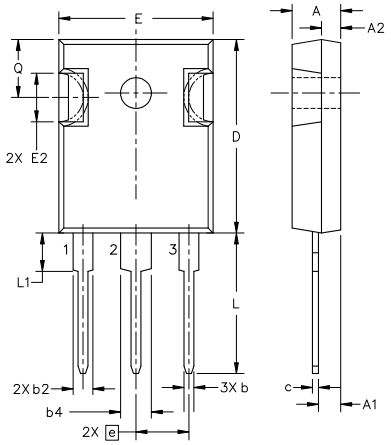

Dim.	Millimeter min	Millimeter max	Inches min	Inches max
A	4.70	5.30	0.185	0.209
A1	2.21	2.59	0.087	0.102
A2	1.50	2.49	0.059	0.098
b	0.99	1.40	0.039	0.055
b2	1.65	2.39	0.065	0.094
b4	2.59	3.43	0.102	0.135
c	0.38	0.89	0.015	0.035
D	20.79	21.45	0.819	0.844
E	15.49	16.24	0.610	0.639
E2	4.31	5.48	0.170	0.216
e	5.46 BSC		0.215 BSC	
L	19.80	20.30	0.780	0.799
L1	-	4.49	-	0.177
Ø P	3.55	3.65	0.140	0.144
Q	5.38	6.19	0.212	0.244

IXYS

Dimensions in mm and inches (1 mm = 0.0394“)

X016d ISO247™ — Weight = 4 g

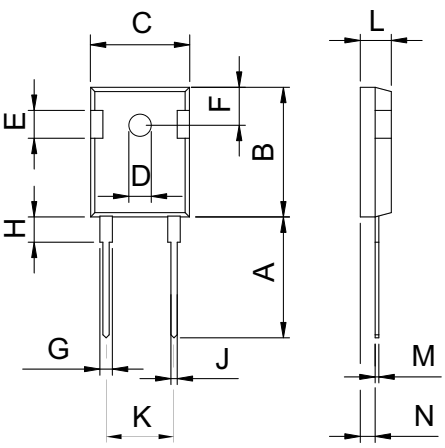

Dim.	Millimeter		Inches	
	min	max	min	max
A	19.81	20.32	0.780	0.800
B	20.80	21.46	0.819	0.845
C	15.75	16.26	0.610	0.640
D	3.55	3.65	0.140	0.144
E	4.32	5.49	0.170	0.216
F	5.40	6.20	0.212	0.244
G	1.65	2.13	0.065	0.084
H	-	4.50	-	0.177
J	1.00	1.40	0.040	0.055
K	10.80	11.00	0.426	0.433
L	4.70	5.30	0.185	0.209
M	0.40	0.80	0.016	0.031
N	1.50	2.49	0.087	0.102

X017a TO-3P — Weight = 5.5 g

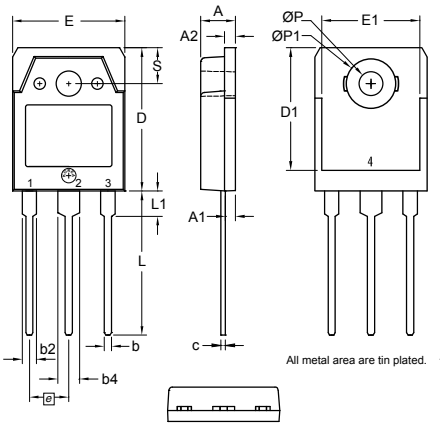

Dim.	Millimeter		Inches	
	min	max	min	max
A	4.70	4.90	0.185	0.193
A1	1.30	1.50	0.051	0.059
A2	1.45	1.65	0.057	0.065
b	0.90	1.15	0.035	0.045
b2	1.90	2.20	0.075	0.087
b4	2.90	3.20	0.114	0.126
c	0.55	0.80	0.022	0.031
D	19.80	20.10	0.780	0.791
D1	16.90	17.20	0.665	0.677
E	15.50	15.80	0.610	0.622
E1	13.50	13.70	0.531	0.539
e	5.45 BSC		0.215 BSC	
L	19.80	20.20	0.780	0.795
L1	3.40	3.60	0.134	0.142
Ø P	3.20	3.40	0.126	0.134
ØP1	6.90	7.10	0.272	0.280
S	4.90	5.10	0.193	0.201

X017b TO-3P — Weight = 5.5 g

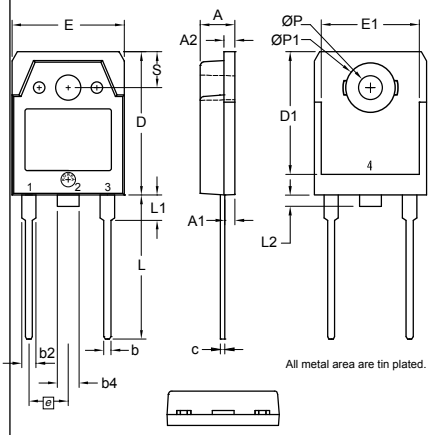

Dim.	Millimeter		Inches	
	min	max	min	max
A	4.70	4.90	0.185	0.193
A1	1.30	1.50	0.051	0.059
A2	1.45	1.65	0.057	0.065
b	0.90	1.15	0.035	0.045
b2	1.90	2.20	0.075	0.087
b4	2.90	3.20	0.114	0.126
c	0.55	0.80	0.022	0.031
D	19.80	20.10	0.780	0.791
D1	16.90	17.20	0.665	0.677
E	15.50	15.80	0.610	0.622
E1	13.50	13.70	0.531	0.539
e	5.45 BSC		0.215 BSC	
L	19.80	20.20	0.780	0.795
L1	3.40	3.60	0.134	0.142
L2	0.00	1.40	0.000	0.055
Ø P	3.20	3.40	0.126	0.134
ØP1	6.90	7.10	0.272	0.280
S	4.90	5.10	0.193	0.201

X017c TO-3PFP — Weight = 5.5 g

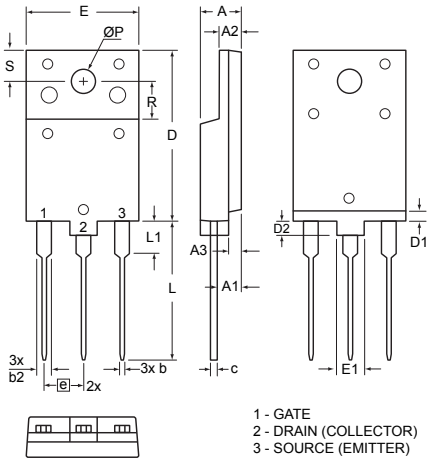

1 - GATE
2 - DRAIN (COLLECTOR)
3 - SOURCE (EMITTER)

Dim.	Millimeter		Inches	
	min	max	min	max
A	5.40	5.80	0.213	0.228
A1	3.10	3.50	0.122	0.138
A2	2.90	3.30	0.114	0.130
A3	1.90	2.30	0.075	0.091
b	0.65	0.95	0.026	0.037
b2	1.90	2.30	0.075	0.091
c	0.80	1.10	0.031	0.043
D	24.30	24.70	0.957	0.972
D1	1.30	1.70	0.051	0.067
D2	1.80	2.2	0.071	0.087
E	15.40	15.80	0.606	0.622
E1	3.90	4.30	0.154	0.169
e	5.45 BSC		0.215 BSC	
L	19.00	19.50	0.748	0.768
L1	4.30	4.70	0.169	0.185
Ø P	3.40	3.80	0.134	0.150
R	5.30	5.70	0.209	0.224
S	4.30	4.70	0.169	0.185

X018 TO-268 I³PAK — Weight = 4.5 g

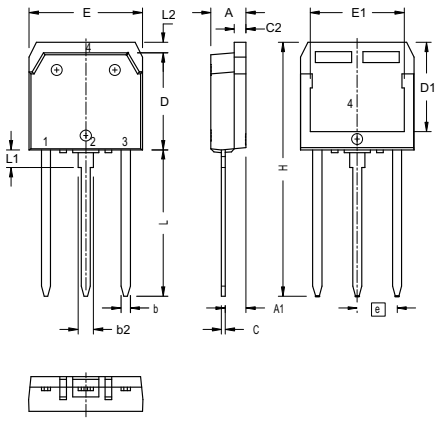

Dim.	Millimeter		Inches	
	min	max	min	max
A	4.90	5.10	0.193	0.201
A1	2.70	2.90	0.106	0.114
b	1.15	1.45	0.045	0.057
b2	1.90	2.10	0.075	0.083
C	0.40	0.65	0.016	0.026
C 2	1.45	1.60	0.057	0.063
D	13.80	14.00	0.543	0.551
D1	12.40	12.70	0.488	0.500
E	15.85	16.05	0.624	0.632
E1	13.30	13.60	0.524	0.535
e	5.45 BSC		0.215 BSC	
H	34.67	35.43	1.365	1.395
L	19.81	20.32	0.780	0.800
L1	2.00	2.30	0.079	0.091
L2	1.00	1.15	0.039	0.045

X019 TO-268 AA (D³PAK) — Weight = 4 g

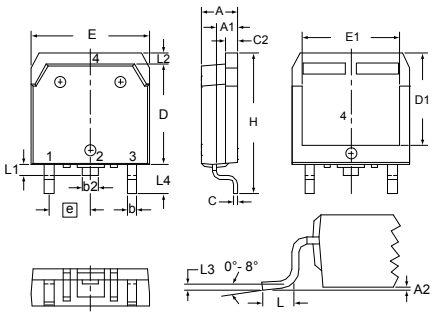

Dim.	Millimeter		Inches	
	min	max	min	max
A	4.90	5.10	0.193	0.201
A1	2.70	2.90	0.106	0.114
A2	0.02	0.25	0.001	0.100
b	1.15	1.45	0.045	0.057
b2	1.90	2.10	0.075	0.083
C	0.40	0.65	0.016	0.026
C 2	1.45	1.60	0.057	0.063
D	13.80	14.00	0.543	0.551
D1	12.40	12.70	0.488	0.500
E	15.85	16.05	0.624	0.632
E1	13.30	13.60	0.524	0.535
e	5.45 BSC		0.215 BSC	
H	18.70	19.10	0.736	0.752
L	2.40	2.70	0.094	0.106
L1	1.20	1.40	0.047	0.055
L2	1.00	1.15	0.039	0.045
L3	2.54 BSC		0.100 BSC	
L4	3.80	4.10	0.150	0.161

Outline drawings

IXYS

Dimensions in mm and inches (1 mm = 0.0394“)

X019a TO-268 AA (D³PAK) Weight = 4 g

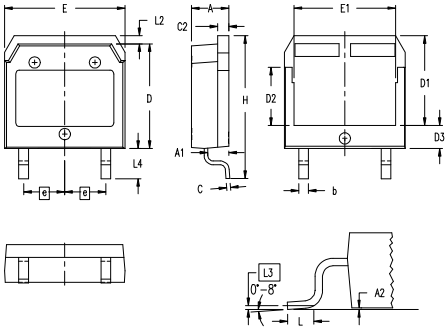

Dim.	Millimeter		Inches	
	min	max	min	max
A	4.90	5.10	0.193	0.201
A1	2.70	2.90	0.106	0.114
A2	0.02	0.25	0.001	0.100
b	1.15	1.45	0.045	0.057
C	0.40	0.65	0.016	0.026
C 2	1.45	1.60	0.057	0.063
D	13.80	14.00	0.543	0.551
D1	11.80	12.10	0.465	0.476
D2	7.50	7.80	0.295	0.307
D3	2.90	3.20	0.114	0.126
E	15.85	16.05	0.624	0.632
E1	13.30	13.60	0.524	0.535
e	5.45 BSC		0.215 BSC	
H	18.70	19.10	0.736	0.752
L	1.70	2.00	0.067	0.079
L2	1.00	1.15	0.039	0.045
L3	0.25 BSC		0.010 BSC	
L4	3.80	4.10	0.150	0.161

X020a TO-264 AA Weight = 10 g

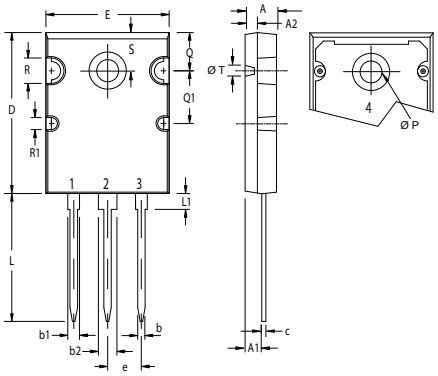

Dim.	Millimeter		Inches	
	min	max	min	max
A	4.82	5.13	0.190	0.202
A1	2.54	2.89	0.100	0.114
A2	2.00	2.10	0.079	0.083
b	1.12	1.42	0.044	0.056
b2	2.90	3.09	0.114	0.122
c	0.53	0.83	0.021	0.033
D	25.91	26.16	1.020	1.030
E	19.81	19.96	0.780	0.786
e	5.45 BSC		0.215 BSC	
J	0.00	0.25	0.000	0.010
K	0.00	0.25	0.000	0.010
L	20.32	20.83	0.800	0.820
L1	2.29	2.59	0.090	0.102
P	3.17	2.66	0.125	0.144
Q	6.07	6.27	0.239	0.247
Q1	8.38	8.69	0.330	0.342
R	3.81	4.32	0.150	0.170
R1	1.78	2.29	0.070	0.090
S	6.04	6.30	0.238	0.248
T	1.57	1.83	0.062	0.072

X021a PLUS264™ Weight = 10 g

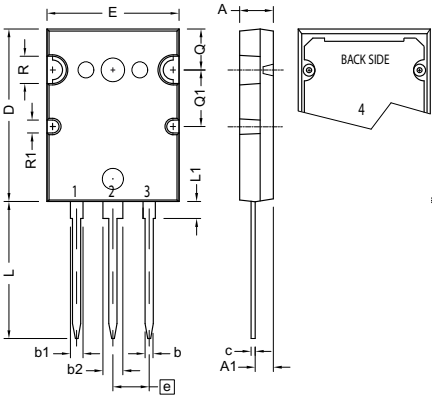

Dim.	Millimeter		Inches	
	min	max	min	max
A	4.70	5.31	0.185	0.209
A1	2.59	3.00	0.102	0.118
b	0.94	1.40	0.037	0.055
b1	2.21	2.59	0.087	0.102
b2	2.79	3.20	0.110	0.126
c	0.43	0.74	0.017	0.029
D	25.58	26.59	1.007	1.047
E	19.30	20.29	0.760	0.799
e	5.45 BSC		0.215 BSC	
L	19.79	21.39	0.779	0.842
L1	2.21	2.59	0.087	0.102
Q	6.10	6.50	0.240	0.256
Q1	8.38	8.79	0.330	0.346
Ø R	3.94	4.75	0.155	0.187
ØR1	2.16	2.36	0.085	0.093

X022a ISOPLUS264™ Weight = 7.5 g

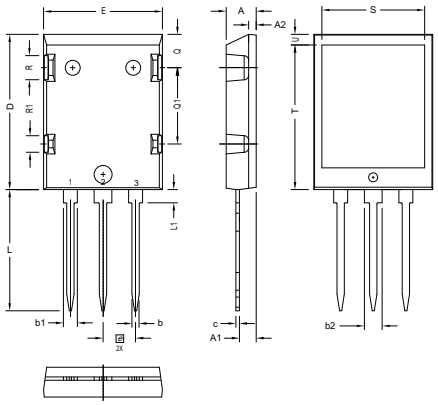

Dim.	Millimeter		Inches	
	min	max	min	max
A	4.83	5.21	0.190	0.205
A1	2.59	3.00	0.102	0.118
A2	1.17	1.40	0.046	0.055
b	1.14	1.40	0.045	0.055
b1	1.60	1.83	0.063	0.072
b2	2.54	2.79	0.100	0.110
b3	1.47	1.73	0.058	0.068
c	0.51	0.74	0.020	0.029
D	25.91	26.42	1.020	1.040
E	19.56	20.29	0.770	0.799
e	3.81 BSC		0.150 BSC	
L	19.81	21.83	0.780	0.820
L1	2.03	2.59	0.080	0.102
Q	5.33	5.97	0.210	0.235
Q1	12.45	13.03	0.490	0.513
R	3.81	4.57	0.150	0.180
R1	2.54	3.30	0.100	0.130
S	16.97	17.53	0.668	0.690
T	20.34	20.85	0.801	0.821
U	1.65	2.03	0.065	0.080

X022 ISOPLUS264™ Weight = 7.5 g

c) 5 pin
d) 3 (sym) w/o pin 2 & 4
e) 3 (HV) w/o pin 3 & 4

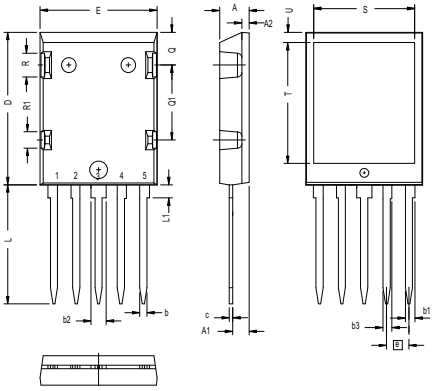

Dim.	Millimeter		Inches	
	min	max	min	max
A	4.83	5.21	0.190	0.205
A1	2.59	3.00	0.102	0.118
A2	1.17	1.40	0.046	0.055
b	1.14	1.40	0.045	0.055
b1	1.60	1.83	0.063	0.072
b2	2.54	2.79	0.100	0.110
b3	1.47	1.73	0.058	0.068
c	0.51	0.74	0.020	0.029
D	25.91	26.42	1.020	1.040
E	19.56	20.29	0.770	0.799
e	3.81 BSC		0.150 BSC	
L	19.81	21.83	0.780	0.820
L1	2.03	2.59	0.080	0.102
Q	5.33	5.97	0.210	0.235
Q1	12.45	13.03	0.490	0.513
R	3.81	4.57	0.150	0.180
R1	2.54	3.30	0.100	0.130
S	16.97	17.53	0.668	0.690
T	20.34	20.85	0.801	0.821
U	1.65	2.03	0.065	0.080

X023 ISO264™ Weight = 6.5 g

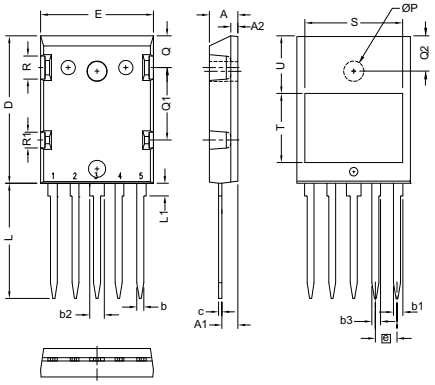

Dim.	Millimeter		Inches	
	min	max	min	max
A	4.83	5.21	0.190	0.205
A1	2.59	3.00	0.102	0.118
A2	1.17	1.40	0.046	0.055
b	1.14	1.40	0.045	0.055
b1	1.60	1.83	0.063	0.072
b2	2.54	2.79	0.100	0.110
b3	1.47	1.73	0.058	0.068
c	0.51	0.74	0.020	0.029
D	25.91	26.42	1.020	1.040
E	19.56	20.29	0.770	0.799
e	3.81 BSC		0.150 BSC	
L	19.81	21.83	0.780	0.820
L1	2.03	2.59	0.080	0.102
P	3.30	3.68	0.130	0.145
Q	5.33	5.97	0.210	0.235
Q1	12.45	13.03	0.490	0.513
Q2	5.96	6.48	0.235	0.255
R	3.81	4.57	0.150	0.180
R1	2.54	3.30	0.100	0.130
S	16.97	17.53	0.668	0.690
T	11.94	12.45	0.470	0.490
U	9.91	10.41	0.390	0.410

Outline drawings

IXYS

Dimensions in mm and inches (1 mm = 0.0394“)

X024a ISOPLUS i4-PAC™ Weight = 6 g

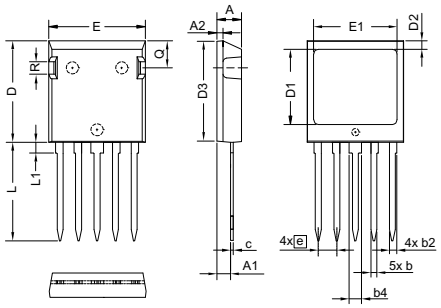

Dim.	Millimeter		Inches	
	min	max	min	max
A	4.83	5.21	0.190	0.205
A1	2.59	3.00	0.102	0.118
A2	1.17	2.16	0.046	0.085
b	1.14	1.40	0.045	0.055
b2	1.47	1.73	0.058	0.068
b4	2.54	2.79	0.100	0.110
c	0.51	0.74	0.020	0.029
D	20.80	21.34	0.819	0.840
D1	14.99	15.75	0.590	0.620
D2	1.65	2.03	0.065	0.080
D3	20.30	20.70	0.799	0.815
E	19.56	20.29	0.770	0.799
E1	16.76	17.53	0.660	0.690
e	3.81 BSC		0.150 BSC	
L	19.81	21.34	0.780	0.840
L1	2.11	2.59	0.083	0.102
Q	5.33	6.20	0.210	0.244
R	2.54	4.57	0.100	0.180
W	-	0.10	-	0.004

X024b ISOPLUS i4-PAC™ Weight = 5.5 g

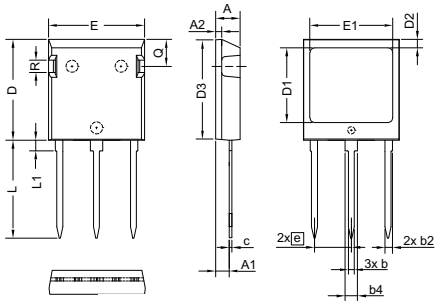

Dim.	Millimeter		Inches	
	min	max	min	max
A	4.83	5.21	0.190	0.205
A1	2.59	3.00	0.102	0.118
A2	1.17	2.16	0.046	0.085
b	1.14	1.40	0.045	0.055
b2	1.47	1.73	0.058	0.068
b4	2.54	2.79	0.100	0.110
c	0.51	0.74	0.020	0.029
D	20.80	21.34	0.819	0.840
D1	14.99	15.75	0.590	0.620
D2	1.65	2.03	0.065	0.080
D3	20.30	20.70	0.799	0.815
E	19.56	20.29	0.770	0.799
E1	16.76	17.53	0.660	0.690
e	7.62 BSC		0.300 BSC	
L	19.81	21.34	0.780	0.840
L1	2.11	2.59	0.083	0.102
Q	5.33	6.20	0.210	0.244
R	2.54	4.57	0.100	0.180
W	-	0.10	-	0.004

X024c ISOPLUS i4-PAC™ Weight = 5.5 g

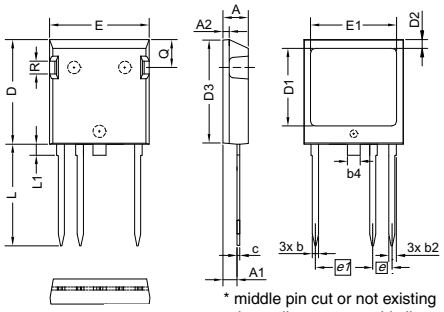

* middle pin cut or not existing depending on assembly line

Dim.	Millimeter		Inches	
	min	max	min	max
A	4.83	5.21	0.190	0.205
A1	2.59	3.00	0.102	0.118
A2	1.17	2.16	0.046	0.085
b	1.14	1.40	0.045	0.055
b2	1.47	1.73	0.058	0.068
b4*	2.54	2.79	0.100	0.110
c	0.51	0.74	0.020	0.029
D	20.80	21.34	0.819	0.840
D1	14.99	15.75	0.590	0.620
D2	1.65	2.03	0.065	0.080
D3	20.30	20.70	0.799	0.815
E	19.56	20.29	0.770	0.799
E1	16.76	17.53	0.660	0.690
e	3.81 BSC		0.150 BSC	
e1	11.43 BSC		0.450 BSC	
L	19.81	21.34	0.780	0.840
L1	2.11	2.59	0.083	0.102
Q	5.33	6.20	0.210	0.244
R	2.54	4.57	0.100	0.180
W	-	0.10	-	0.004

X024d ISOPLUS i4-PAC™ Weight = 6 g

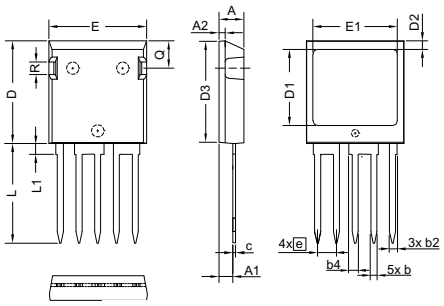

Dim.	Millimeter		Inches	
	min	max	min	max
A	4.83	5.21	0.190	0.205
A1	2.59	3.00	0.102	0.118
A2	1.17	2.16	0.046	0.085
b	1.14	1.40	0.045	0.055
b2	1.47	1.73	0.058	0.068
c	0.51	0.74	0.020	0.029
D	20.80	21.34	0.819	0.840
D1	14.99	15.75	0.590	0.620
D2	1.65	2.03	0.065	0.080
D3	20.30	20.70	0.799	0.815
E	19.56	20.29	0.770	0.799
E1	16.76	17.53	0.660	0.690
e	3.81 BSC		0.150 BSC	
L	19.81	21.34	0.780	0.840
L1	2.11	2.59	0.083	0.102
Q	5.33	6.20	0.210	0.244
R	2.54	4.57	0.100	0.180
W	-	0.10	-	0.004

X024e ISOPLUS i4-PAC™ Weight = 6 g

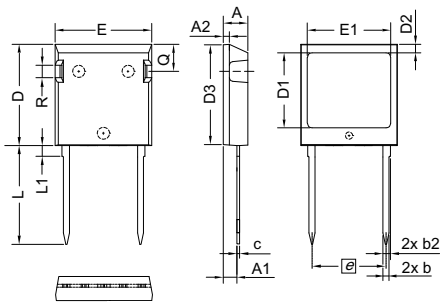

Dim.	Millimeter		Inches	
	min	max	min	max
A	4.83	5.21	0.190	0.205
A1	2.59	3.00	0.102	0.118
A2	1.17	2.16	0.046	0.085
b	1.14	1.40	0.045	0.055
b2	1.47	1.73	0.058	0.068
c	0.51	0.74	0.020	0.029
D	20.80	21.34	0.819	0.840
D1	14.99	15.75	0.590	0.620
D2	1.65	2.03	0.065	0.080
D3	20.30	20.70	0.799	0.815
E	19.56	20.29	0.770	0.799
E1	16.76	17.53	0.660	0.690
e	15.24 BSC		0.600 BSC	
L	19.81	21.34	0.780	0.840
L1	2.11	2.59	0.083	0.102
Q	5.33	6.20	0.210	0.244
R	2.54	4.57	0.100	0.180
W	-	0.10	-	0.004

X025a GBFP Weight = 7 g

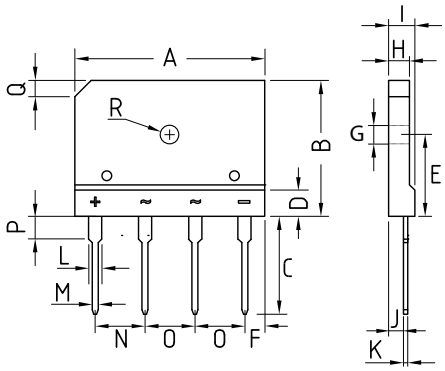

Dim.	Millimeter		Inches	
	min	max	min	max
A	29.70	30.30	1.170	1.194
B	19.70	20.30	0.776	0.800
C	17.00	18.00	0.670	0.709
D	4.70	4.90	0.185	0.193
E	10.80	11.20	0.426	0.441
F	2.30	2.70	0.091	0.106
G	3.10	3.40	0.122	0.134
H	3.40	3.80	0.134	0.150
I	4.40	4.80	0.173	0.189
J	2.50	2.90	0.099	0.114
K	0.60	0.80	0.024	0.032
L	2.00	2.40	0.079	0.095
M	0.90	1.10	0.035	0.043
N	9.80	10.20	0.386	0.402
O	7.30	7.70	0.288	0.303
P	3.80	4.20	0.150	0.165
Q	(3.0) x 45°		(0.118) x 45°	
Ø R	3.1	3.4	0.122	0.134

IXYS

Dimensions in mm and inches (1 mm = 0.0394“)

X025b GUFP Weight = 8.5 g

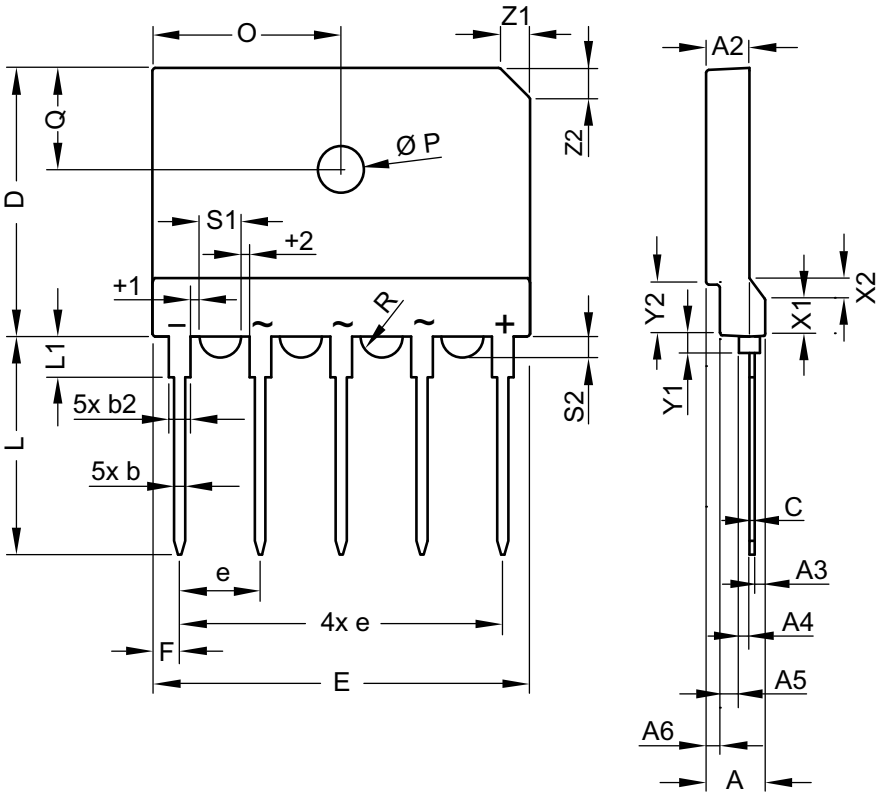

Dim.	Millimeter			Inches		
	min	typ.	max	min	typ.	max
A	5.40	5.50	5.60	0.213	0.217	0.221
A2	3.90	4.00	4.10	0.154	0.158	0.162
A3	0.95	1.00	1.10	0.037	0.039	0.043
A4	0.95	1.00	1.05	0.037	0.039	0.041
A5	1.60	1.70	1.80	0.063	0.067	0.071
A6	1.25	1.30	1.35	0.049	0.051	0.053
b	0.95	1.00	1.05	0.037	0.039	0.041
b2	1.95	2.00	2.05	0.077	0.079	0.081
C	0.45	0.50	0.55	0.018	0.020	0.022
D	24.80	25.00	25.20	0.977	0.985	0.993
E	34.70	35.00	35.30	1.367	1.379	1.391
e	BSC	7.50		BSC	0.296	
F	2.40	2.50	2.60	0.095	0.099	0.102
L	2.30	20.40	2.50	0.091	0.804	0.099
L1	3.70	3.75	3.80	0.146	0.148	0.150
O	17.40	17.50	17.60	0.686	0.690	0.693
Ø P	4.10	4.20	4.30	0.162	0.165	0.169
Q	9.20	9.30	9.40	0.362	0.366	0.370
$^{0}/_{2}$ R	-	1.77	-	-	0.070	-
s1	3.45	3.50	3.55	0.136	0.138	0.140
s2	1.45	1.50	1.55	0.057	0.059	0.061
t1	0.95	1.00	1.05	0.037	0.039	0.041
t2	0.95	1.00	1.05	0.037	0.039	0.041
x1	3.20	3.30	3.40	0.126	0.130	0.134
x2	1.90	2.00	2.10	0.075	0.079	0.083
y1	1.60	1.65	1.70	0.063	0.065	0.067
y2	4.65	4.70	4.75	0.183	0.185	0.187
z1	2.80	2.90	3.00	0.110	0.114	0.118

X026c ISOPLUS™-DIL (SMD) Weight = 13 g

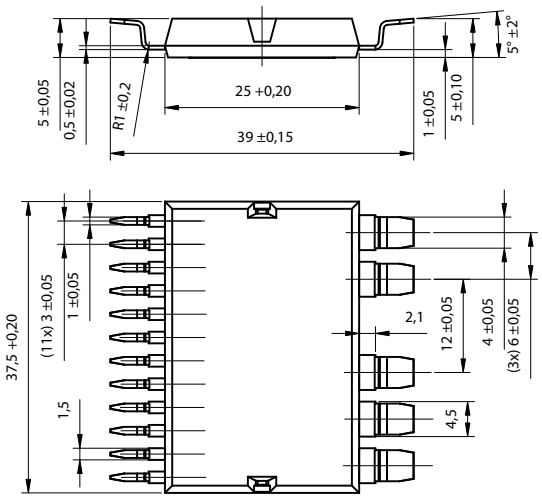

X026d ISOPLUS™-DIL (SMD) Weight = 13 g

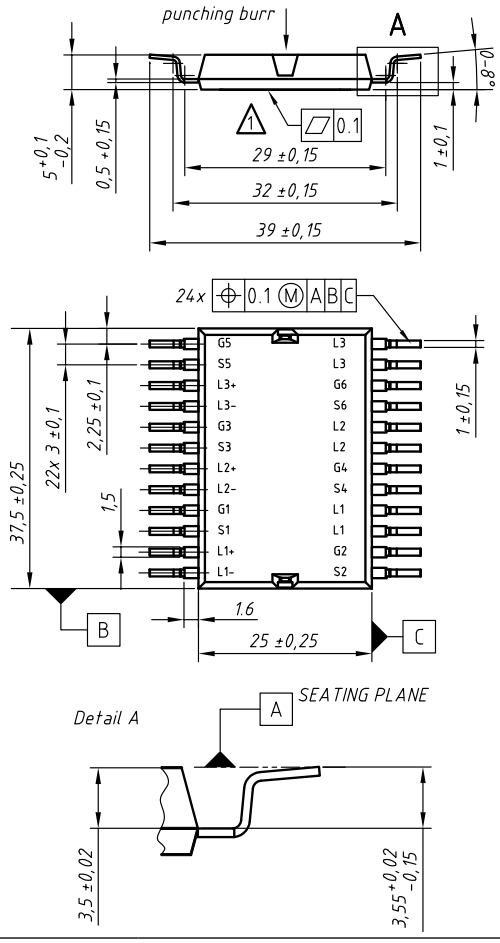

Outline drawings

IXYS

Dimensions in mm and inches (1 mm = 0.0394“)

X027a SOT-227 B miniBLOC / X027b SOT-227 UI miniBLOC

Weight = 29 g

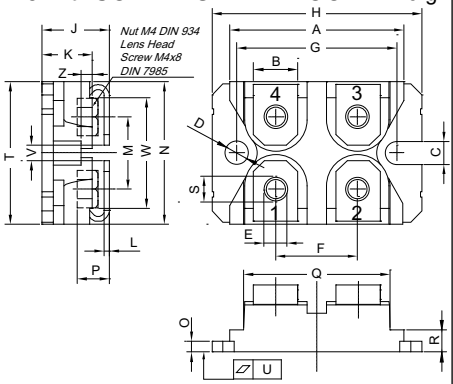

Dim.	Millimeter min	Millimeter max	Inches min	Inches max
A	31.50	31.88	1.240	1.255
B	7.80	8.20	0.307	0.323
C	4.09	4.29	0.161	0.169
D	4.09	4.29	0.161	0.169
E	4.09	4.29	0.161	0.169
F	14.91	15.11	0.587	0.595
G	30.12	30.30	1.186	1.193
H	37.80	38.23	1.488	1.505
J	11.68	12.22	0.460	0.481
K	8.92	9.60	0.351	0.378
L	0.74	0.84	0.029	0.033
M	12.50	13.10	0.492	0.516
N	25.15	25.42	0.990	1.001
O	1.95	2.13	0.077	0.084
P	4.95	6.20	0.195	0.244
Q	26.54	26.90	1.045	1.059
R	3.94	4.42	0.155	0.174
S	4.55	4.85	0.179	0.191
T	24.59	25.25	0.968	0.994
U	-0.05	0.10	-0.002	0.004
V	3.20	5.50	0.126	0.217
W	19.81	21.08	0.780	0.830
Z	2.50	2.70	0.098	0.106

X028 ISOPLUS227™

Weight = 19 g

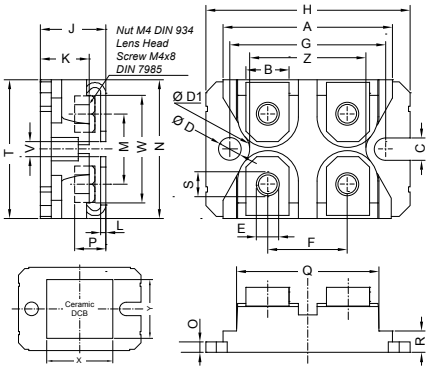

Dim.	Millimeter min	Millimeter max	Inches min	Inches max
A	31.50	32.26	1.240	1.270
B	7.87	8.38	0.310	0.330
C	3.94	4.19	0.155	0.165
D	3.94	4.19	0.155	0.165
D1	3.81	3.98	0.150	0.157
E	4.06	4.27	0.160	0.168
F	14.91	15.11	0.587	0.595
G	30.12	30.30	1.186	1.193
H	37.80	38.23	1.489	1.505
J	11.81	12.22	0.465	0.481
K	9.40	9.65	0.370	0.380
L	0.76	0.84	0.030	0.033
M	12.60	12.85	0.496	0.506
N	25.15	25.42	0.990	1.001
O	2.54	2.64	0.100	0.105
P	4.95	5.97	0.195	0.235
Q	26.54	26.90	1.045	1.059
R	4.06	4.32	0.160	0.170
S	4.72	4.85	0.186	0.191
T	24.59	25.07	0.968	0.987
U	-0.03	0.05	-0.001	0.002
V	3.30	4.06	0.130	0.160
W	19.81	21.08	0.780	0.830
X	19.56	20.57	0.770	0.810
Y	17.27	18.29	0.680	0.720
Z	22.48	22.66	0.885	0.892

X030a SMPD-B

Weight = 8.5 g

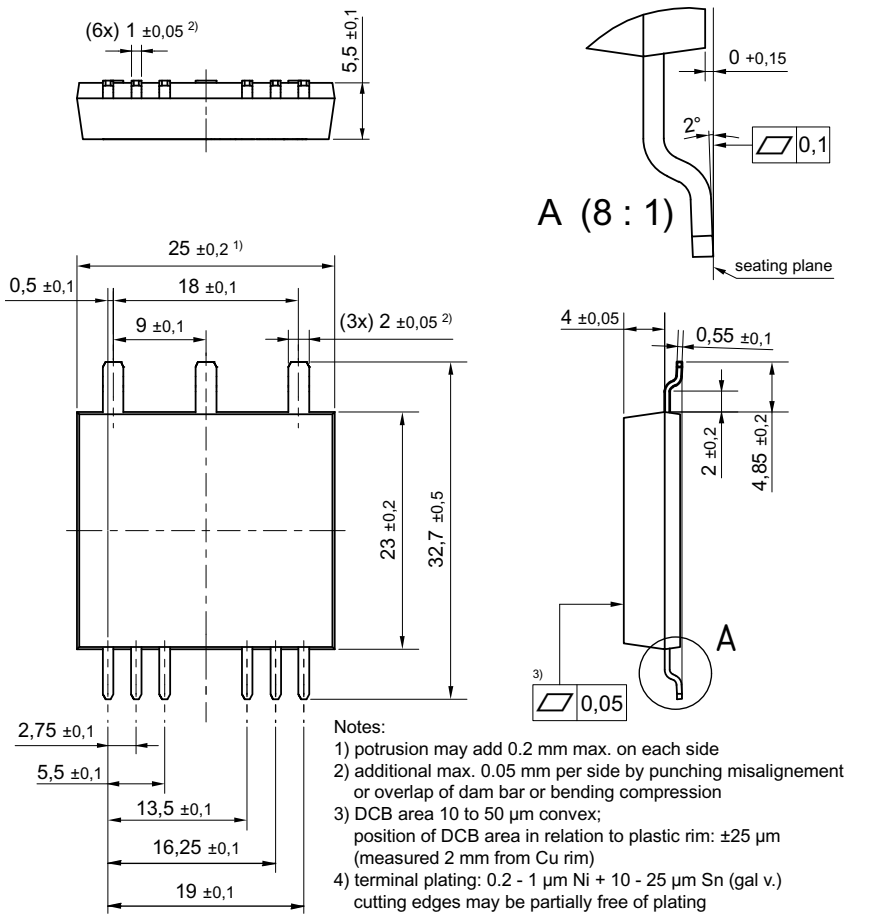

Notes:
1) potrusion may add 0.2 mm max. on each side
2) additional max. 0.05 mm per side by punching misalignement or overlap of dam bar or bending compression
3) DCB area 10 to 50 µm convex; position of DCB area in relation to plastic rim: ±25 µm (measured 2 mm from Cu rim)
4) terminal plating: 0.2 - 1 µm Ni + 10 - 25 µm Sn (gal v.) cutting edges may be partially free of plating

X030b SMPD-B

Weight = 8.5 g

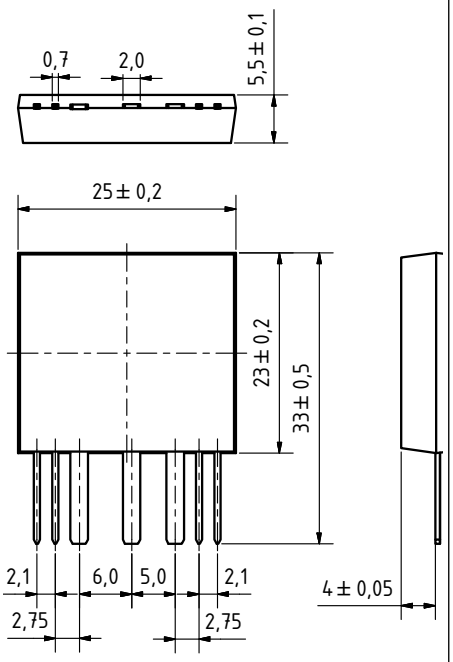

Outline drawings

IXYS

Dimensions in mm and inches (1 mm = 0.0394“)

X031a SMPD-X See data sheet for pin arrangement

Weight = 8.5 g

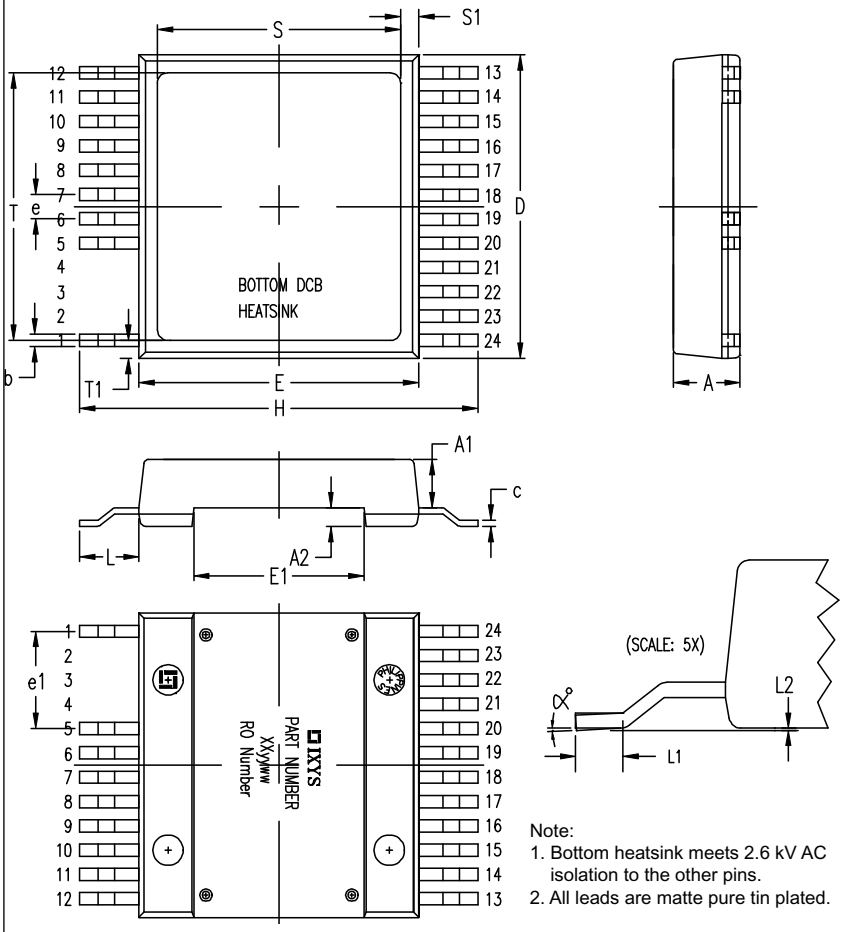

Dim.	Millimeter		Inches	
	min	max	min	max
A	5.30	5.70	0.209	0.224
A1	3.90	4.10	0.154	0.161
A2	1.40	1.60	0.055	0.063
b	0.90	1.15	0.035	0.045
c	0.45	0.65	0.018	0.026
D	24.80	25.25	0.976	0.994
E	22.80	23.25	0.898	0.915
E1	13.80	14.20	0.543	0.559
e	2.00	BSC	0.079	BSC
e1	8.00	BSC	0.315	BSC
H	32.30	33.30	1.272	1.311
L	4.60	5.30	0.181	0.209
L1	1.30	1.70	0.051	0.067
L2	0.00	0.15	0.000	0.006
S	18.85	20.12	0.742	0.792
S1	1.45	2.08	0.057	0.082
T	20.90	22.17	0.823	0.873
T1	1.42	2.03	0.056	0.080
a	4°	-	4°	-

Note:
1. Bottom heatsink meets 2.6 kV AC isolation to the other pins.
2. All leads are matte pure tin plated.

X031b SMPD-X

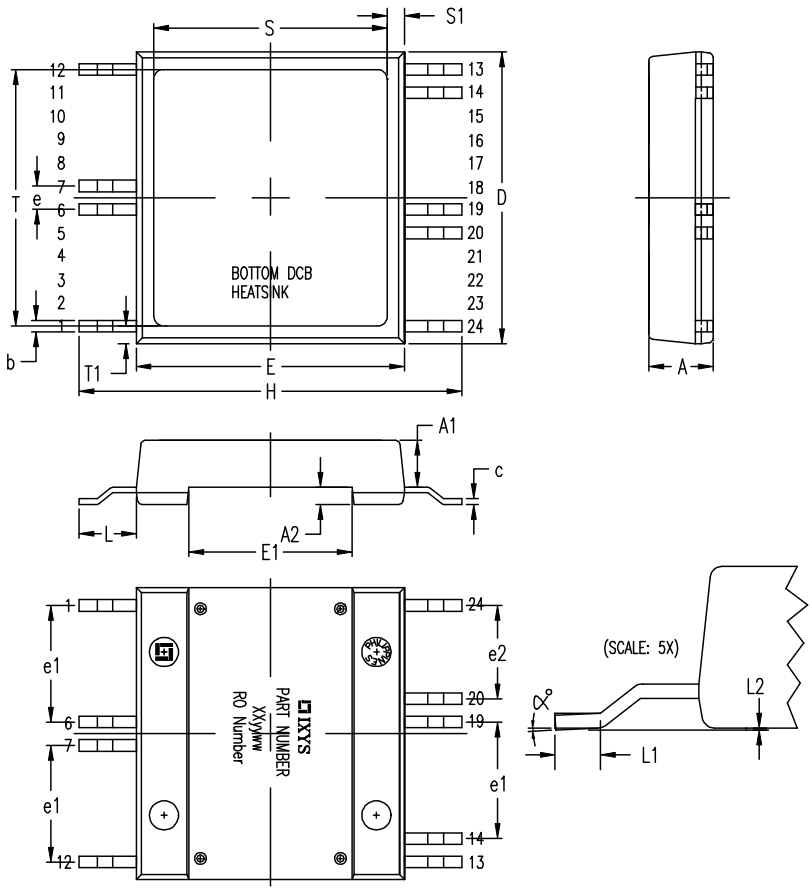

SYM	INCHES		MILLIMETERS	
	MIN	MAX	MIN	MAX
A	.209	.224	5.30	5.70
A1	.154	.161	3.90	4.10
A2	.055	.063	1.40	1.60
b	.035	.045	0.90	1.15
c	.018	.026	0.45	0.65
D	.976	.994	24.80	25.25
E	.898	.915	22.80	23.25
E1	.543	.559	13.80	14.20
e	.079 BSC		2.00 BSC	
e1	.394 BSC		10.00 BSC	
e2	.315 BSC		8.00 BSC	
H	1.272	1.311	32.30	33.30
L	.181	.209	4.60	5.30
L1	.051	.067	1.30	1.70
L2	.000	.006	0.00	0.15
S	.742	.792	18.85	20.12
S1	.057	.082	1.45	2.08
T	.823	.873	20.90	22.17
T1	.069	.089	1.75	2.25
α	0	4°	0	4°

NOTE:
1. Bottom heatsink meets 2.6KV AC isolation to the other pins.
2. All leads are matte pure tin plated.

IXYS

Dimensions in mm and inches (1 mm = 0.0394“)

X031c SMPD-X Weight = 8.5 g

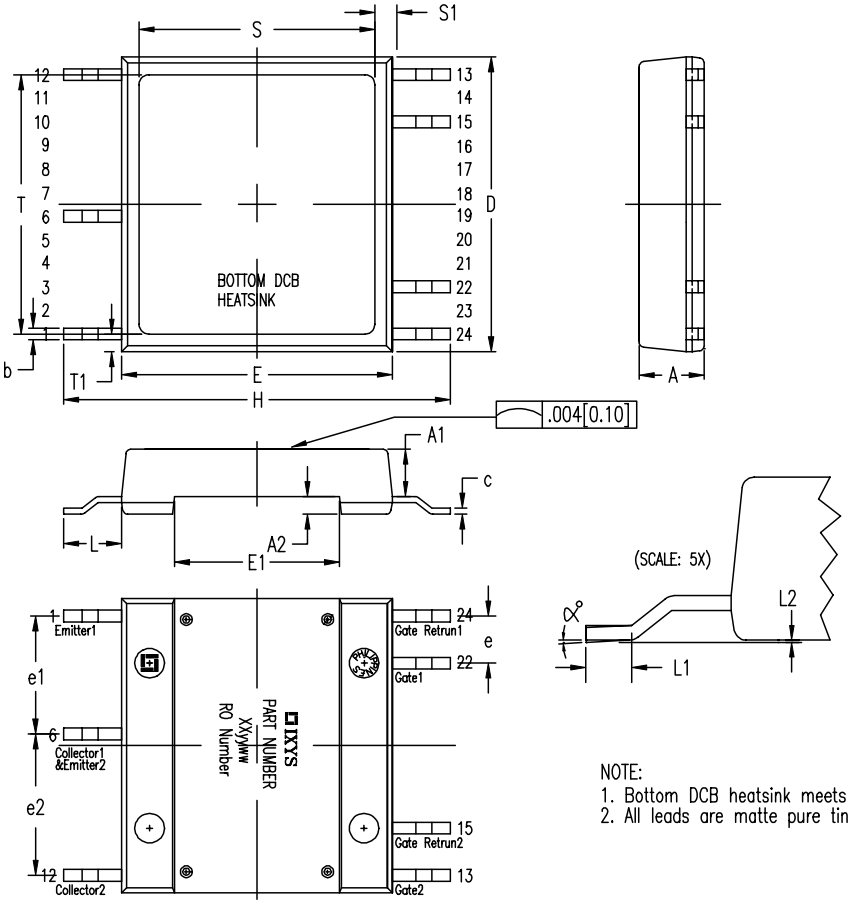

SYM	INCHES		MILLIMETERS	
	MIN	MAX	MIN	MAX
A	.209	.224	5.30	5.70
A1	.154	.161	3.90	4.10
A2	.055	.063	1.40	1.60
b	.035	.045	0.90	1.15
c	.018	.026	0.45	0.65
D	.976	.994	24.80	25.25
E	.898	.915	22.80	23.25
E1	.543	.559	13.80	14.20
e	.157 BSC		4.00 BSC	
e1	.394 BSC		10.00 BSC	
e2	.472 BSC		12.00 BSC	
H	1.272	1.311	32.30	33.30
L	.181	.209	4.60	5.30
L1	.051	.067	1.30	1.70
L2	.000	.006	0.00	0.15
S	.748	.807	19.00	20.50
S1	.039	.079	1.00	2.00
T	.826	.886	21.00	22.50
T1	.039	.079	1.00	2.00
α	0	4°	0	4°

NOTE:
1. Bottom DCB heatsink meets 2.6KV AC, 2 Sec isolation to the other pins.
2. All leads are matte pure tin plated.

X101 ECO-PAC1 Weight = 19 g

See data sheet for pin arrangement

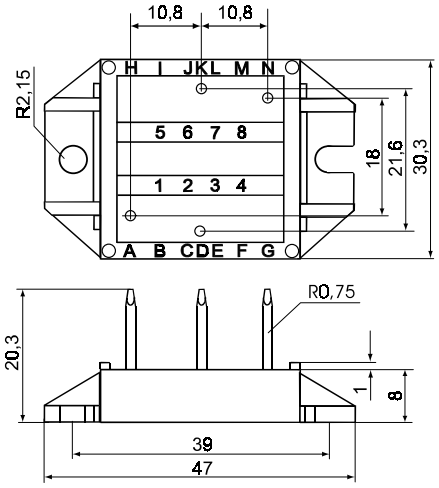

X102 ECO-PAC2 Weight = 23 g

See data sheet for pin arrangement

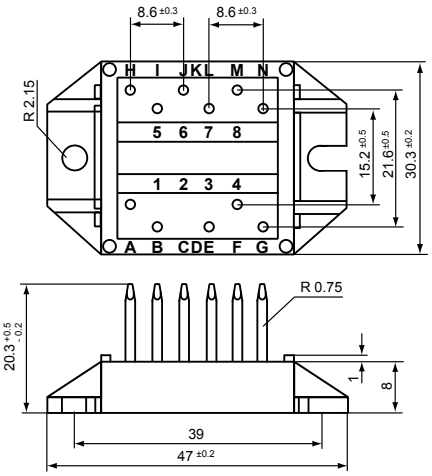

X103 V1-A-Pack Weight = 37 g

See data sheet for pin arrangement

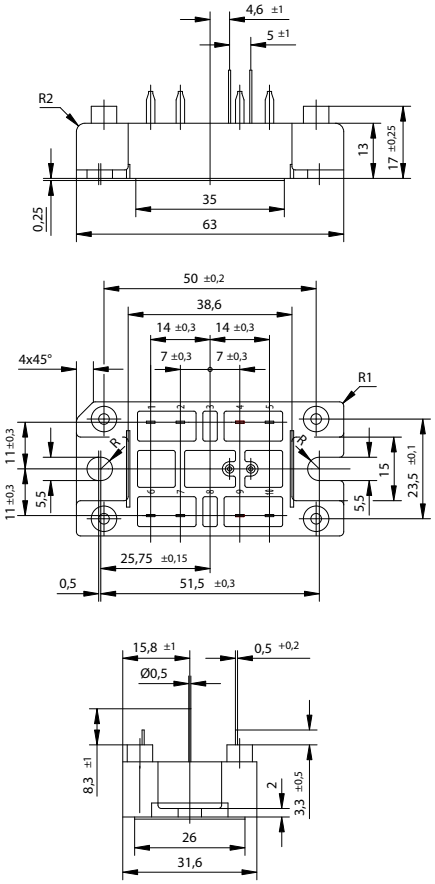

IXYS

Dimensions in mm and inches (1 mm = 0.0394“)

X104 V2-Pack Weight = 76 g

See data sheet for pin arrangement

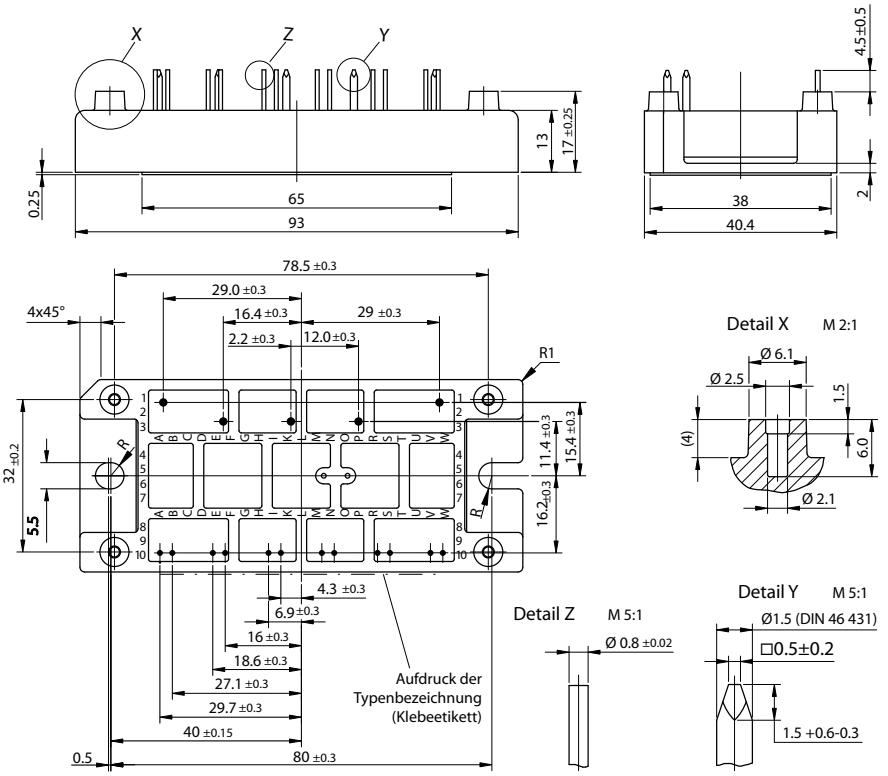

X105 V1-B-Pack Weight =

a: pin length = 31 mm 30 g

b: pin length = 16 mm 28 g

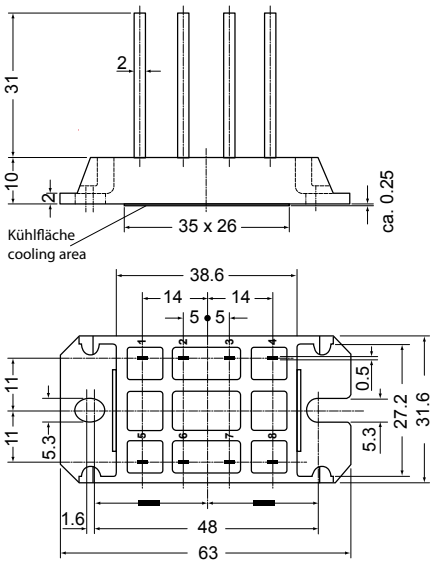

X109 Mini-Pack2B Weight = 42 g

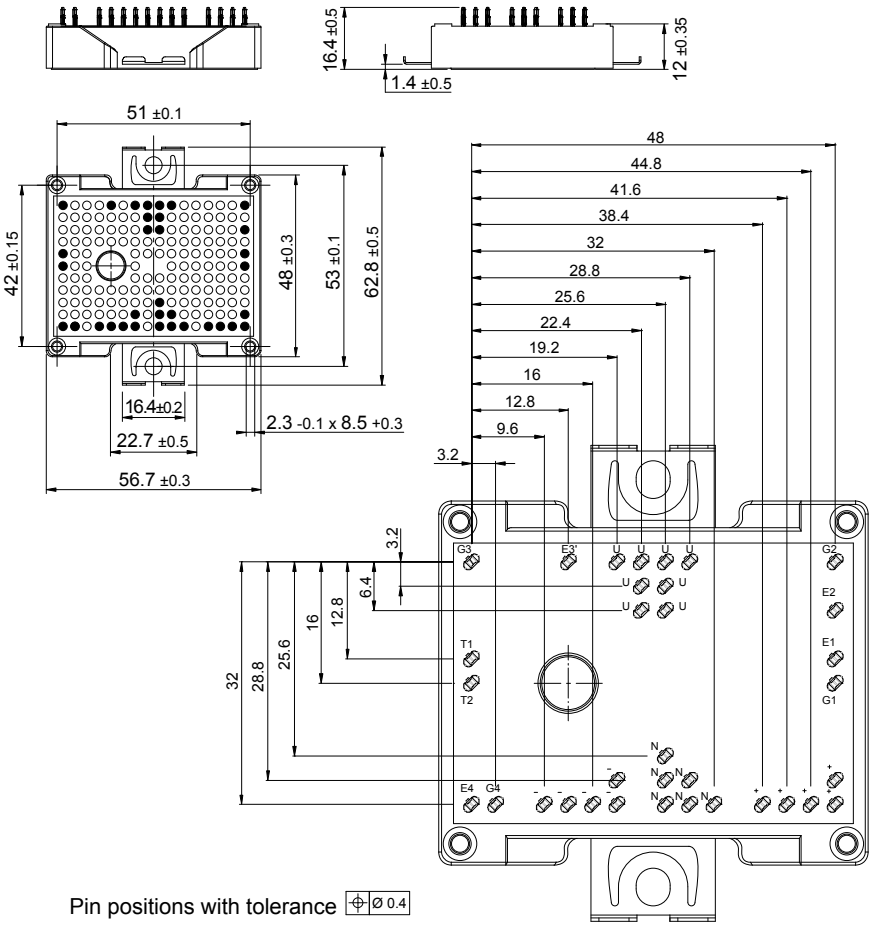

Pin positions with tolerance ⌖ Ø 0.4

IXYS

Dimensions in mm and inches (1 mm = 0.0394“)

X110 MiniPack2 Weight = 37 g

See data sheet for pin arrangement

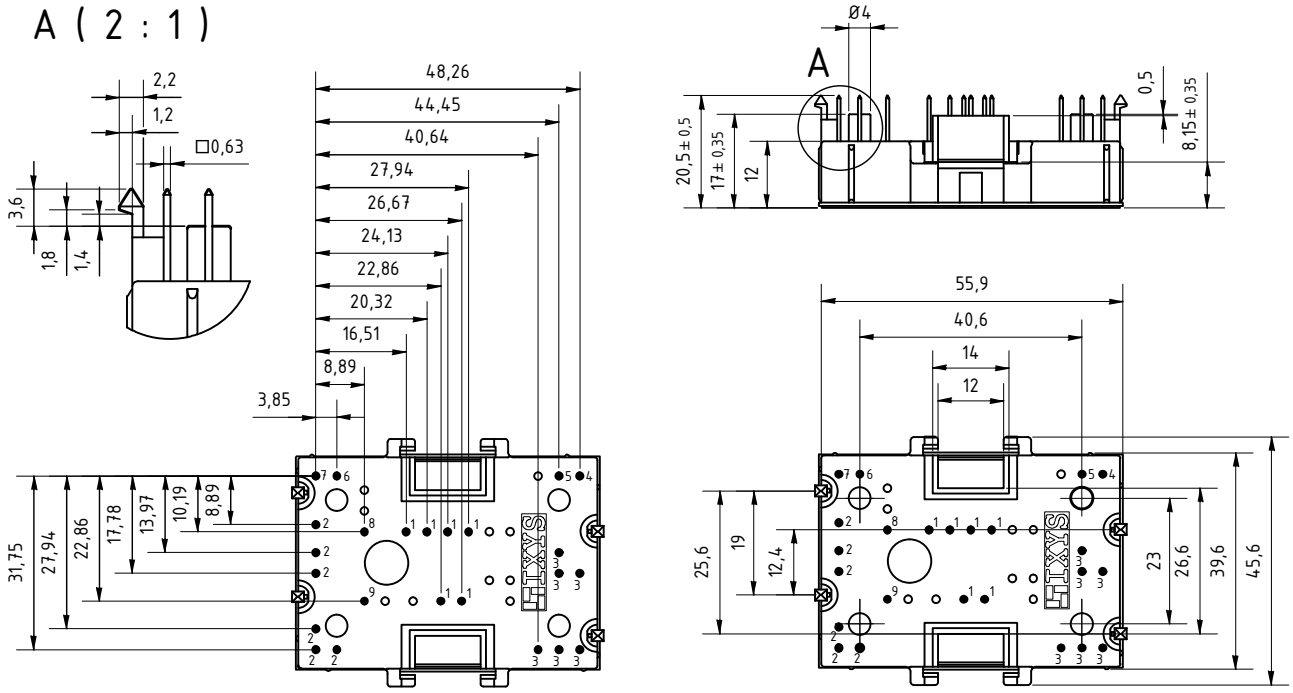

Bemerkungen:
1) Toleranz für Pin Positionen entsprechend ⌖ Ø 0,4
2) Vorgesehen für die Montage auf Leiterplatten mit einer Dicke von 1,6 ±0,2mm

Remarks:
1) Pin positions with tolerance ⌖ Ø 0.4
2) Mounting on PCB with thickness of 1.6 ±0.2mm

X111 E1-Pack Weight = 39 g

See data sheet for pin arrangement

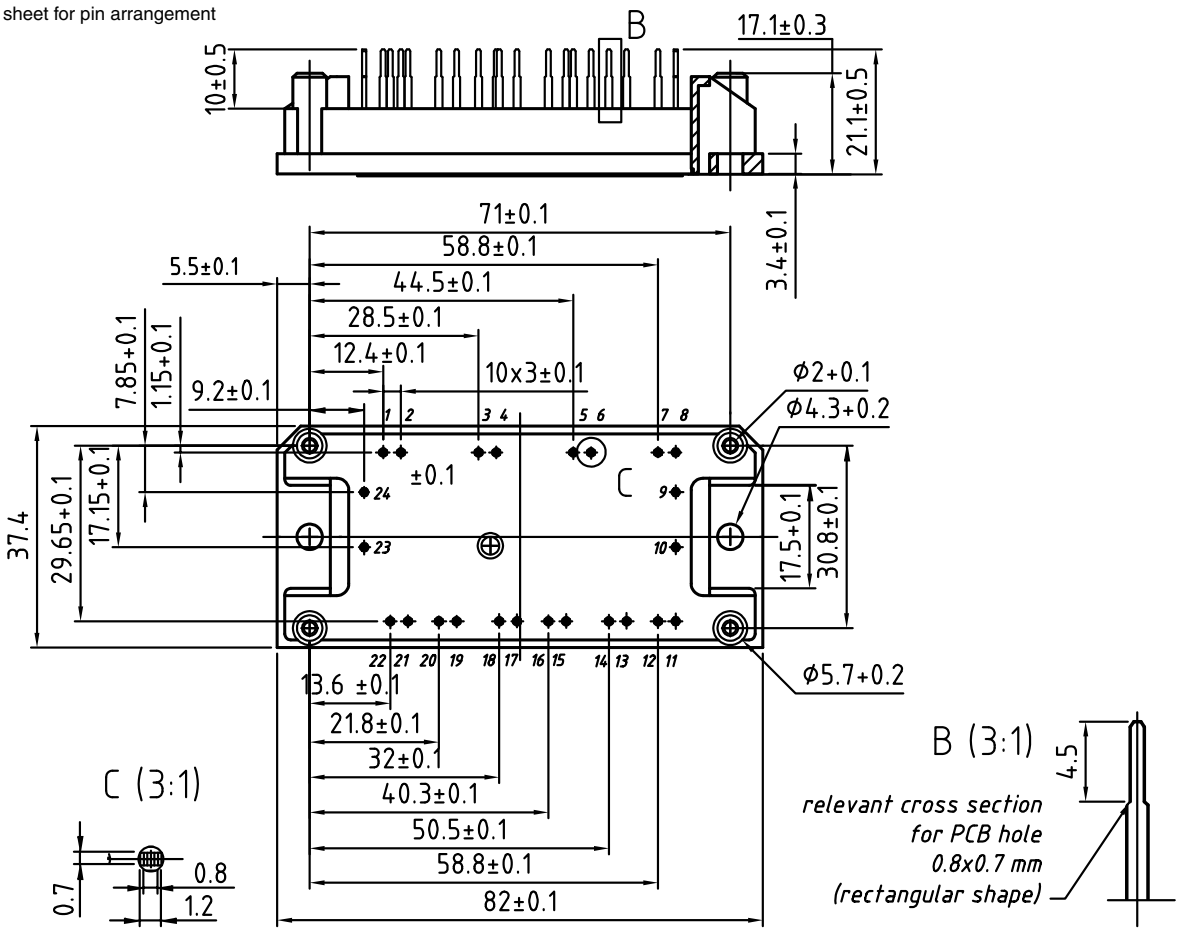

IXYS

Dimensions in mm and inches (1 mm = 0.0394“)

X112 E2-Pack Weight = 176 g

See data sheet for pin arrangement

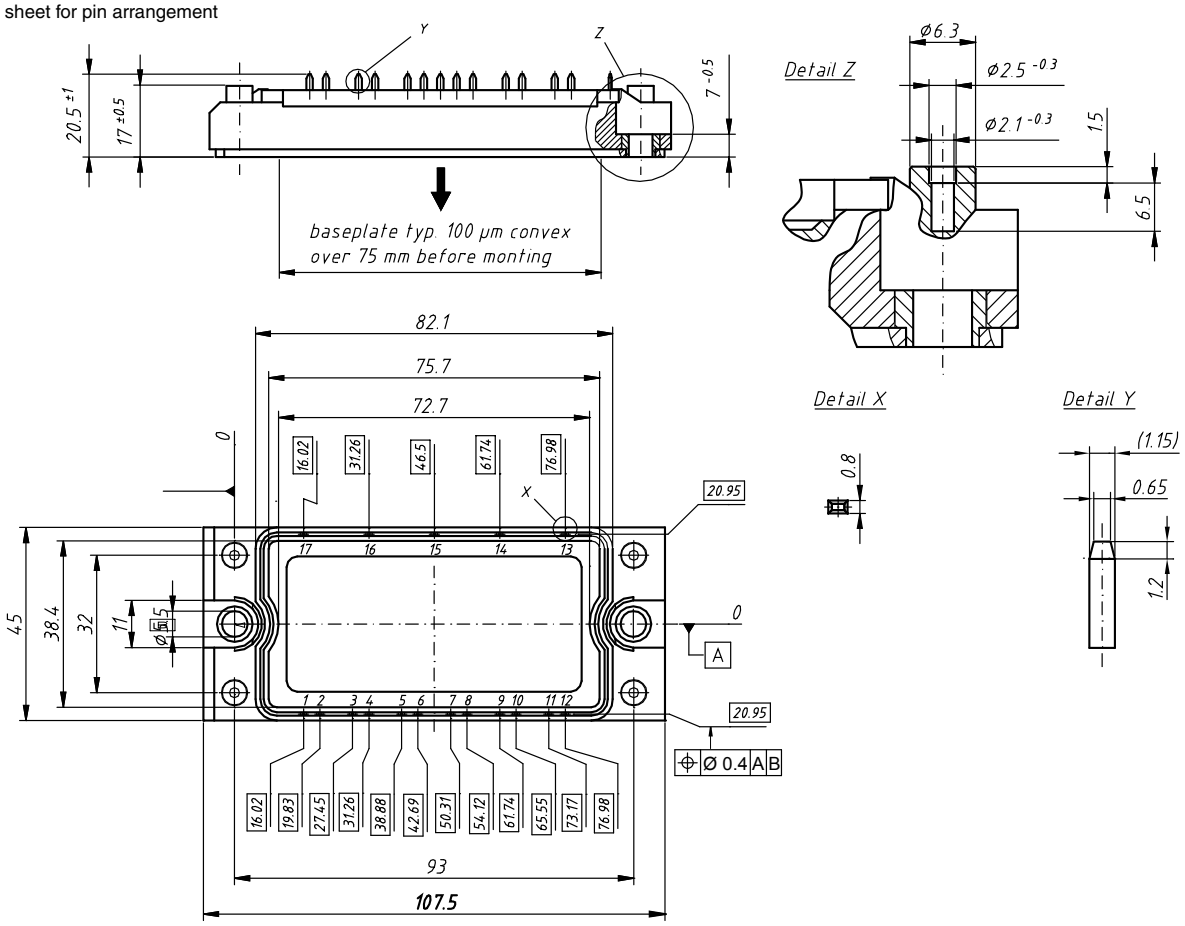

X113 E3-Pack Weight = 270 g

See data sheet for pin arrangement

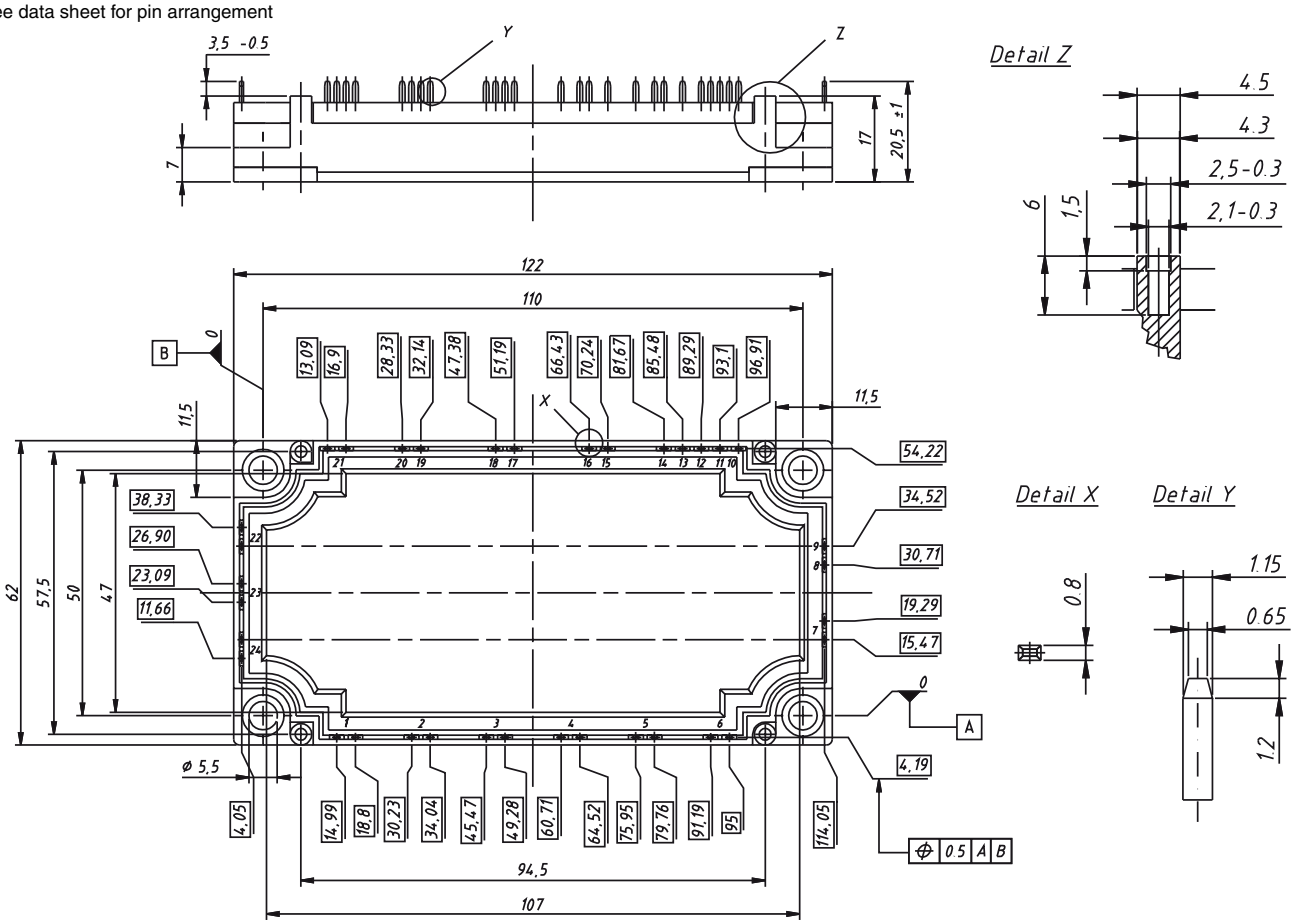

IXYS

Dimensions in mm and inches (1 mm = 0.0394“)

X114 E9-Pack Weight = 835 g

See data sheet for pin arrangement

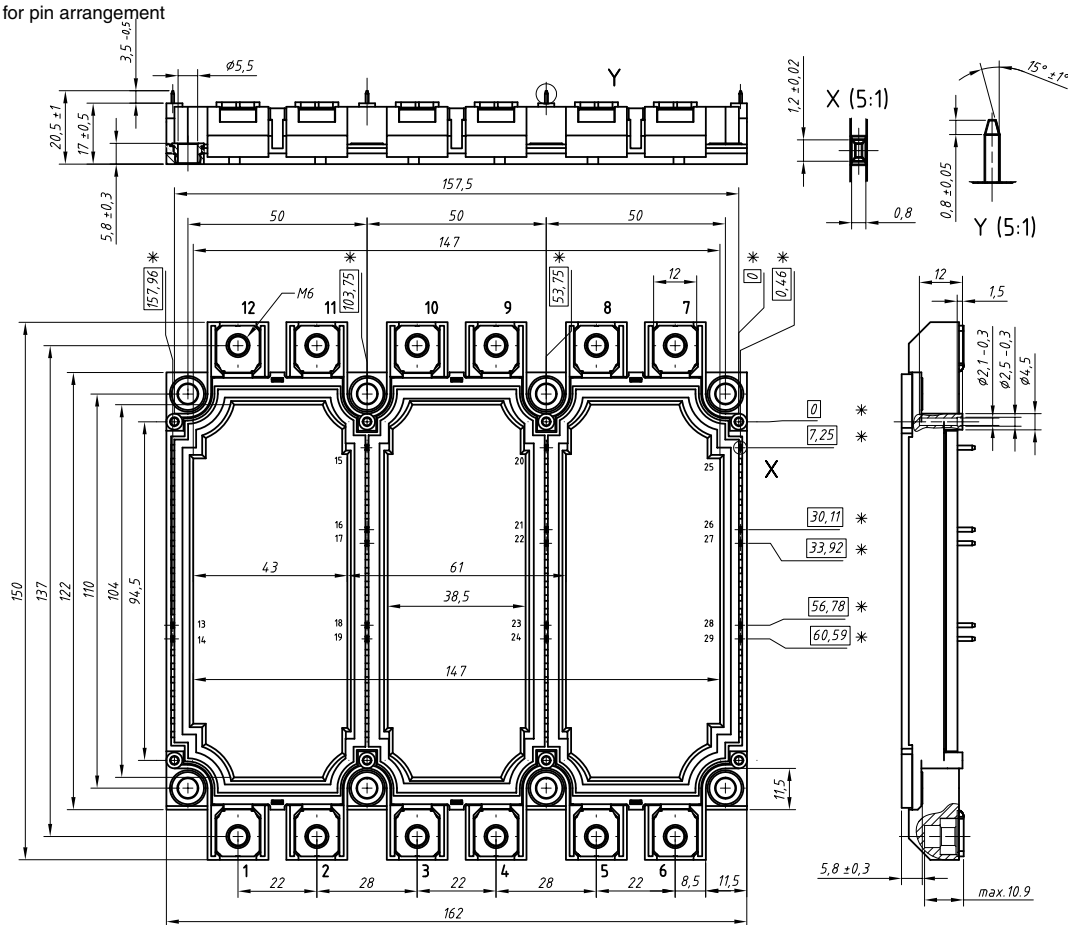

X115 FO-A Weight = 15 g

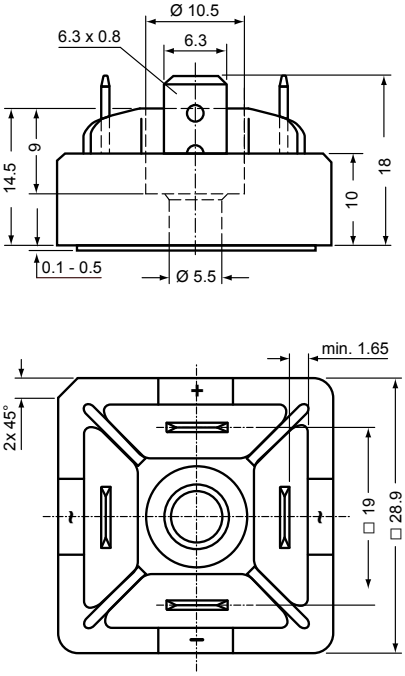

X116 FO-B Weight =

a: VUO 20 g

b: w/o terminal C (VBO) 19 g

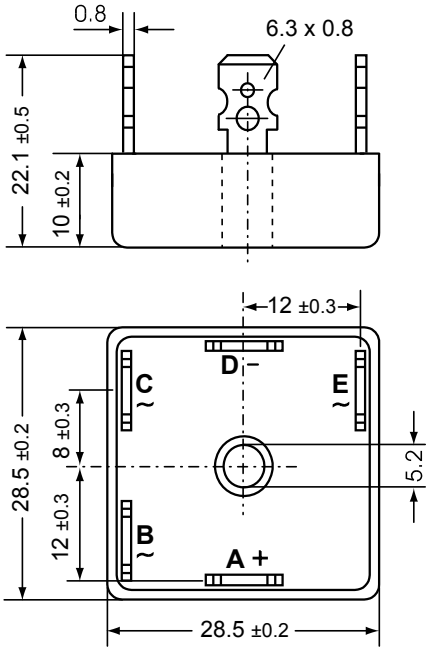

X117a FO-F-A Weight = 45 g

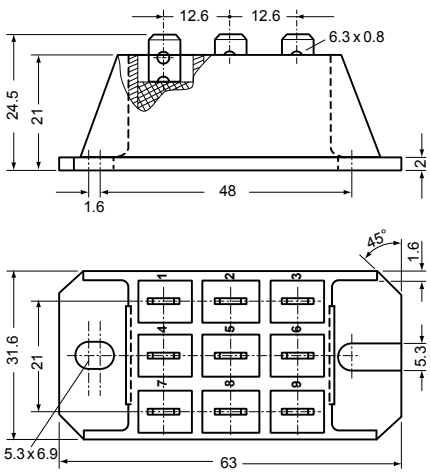

Outline drawings

IXYS

Dimensions in mm and inches (1 mm = 0.0394“)

X117b FO-F-B Weight = 45 g

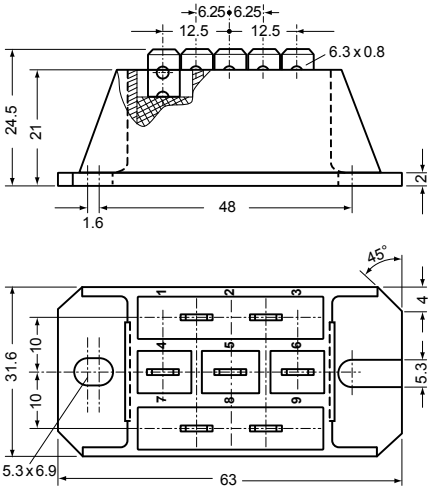

X118 FO-T-A
c: w/o terminal 4, 5, & 6 (VVZ & VVZF)
d: w/o terminal 1, 2, 3, 4, 5, & 6 (VUO)

Weight = 104 g

See data sheet for pin arrangement

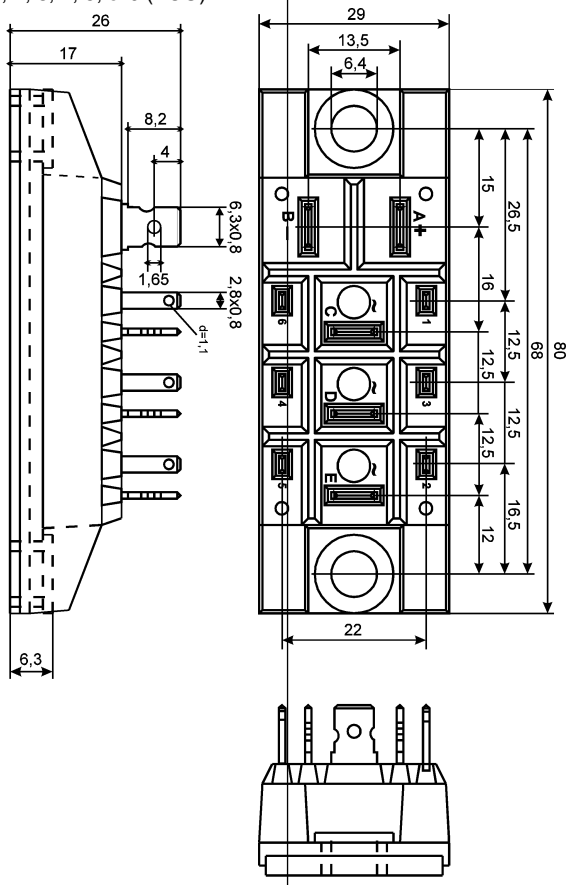

X119 PWS-A Weight =
a: VUO 104 g
b: w/o terminal D (VBO) 100 g

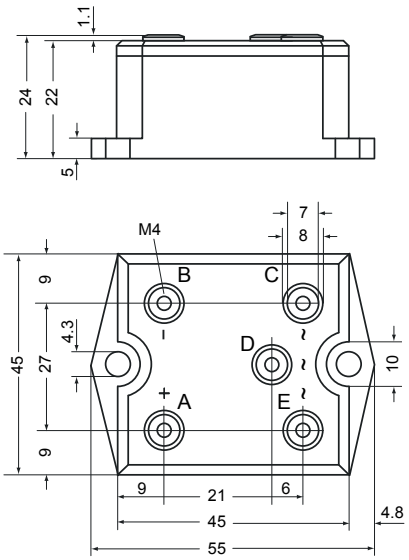

X120 PWS-B Weight =
a: VUO 203 g
b: w/o terminal D (VBO) 193 g

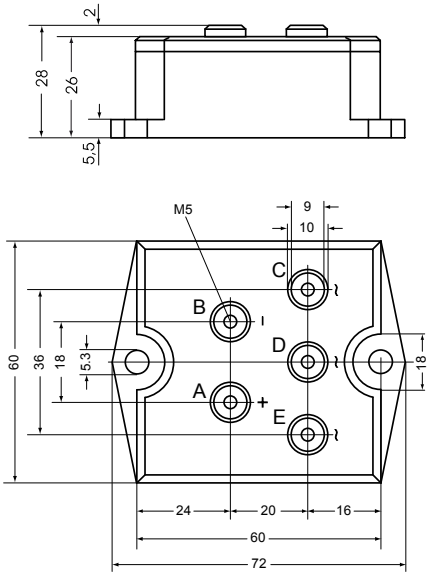

X121 PWS-C Weight =
a: VUO 250 g
b: w/o terminal D (VBO) 237 g

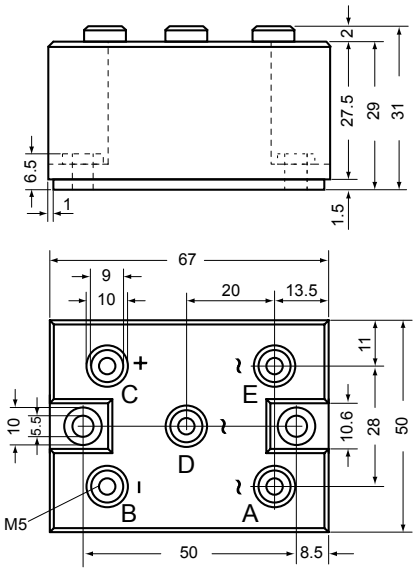

IXYS

Dimensions in mm and inches (1 mm = 0.0394“)

X122 PWS-D Weight =

a: VUO	159 g
b: w/o terminal C (VBO)	153 g

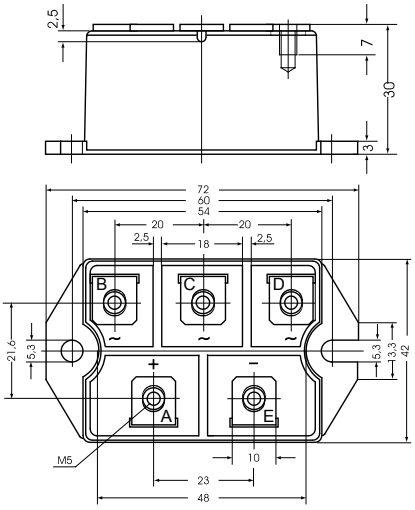

X122 PWS-D Flat Weight =

c: VUO	118 g

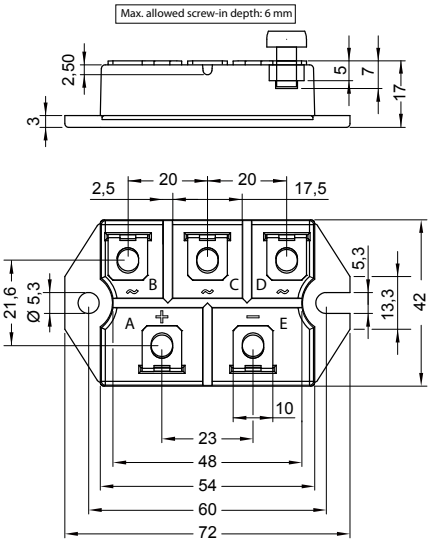

X123 PWS-E Weight =

a: VTO	284 g
b: w/o terminal 4, 5 & 6 (VVZ)	284 g
c: w/o terminal 1, 2, 3, 4, 5 & 6 (VUO)	284 g
d: w/o terminal D, 3, 4, 5 & 6 (VHF)	273 g
e: w/o terminal D, 1, 2, 3, 4, 5 & 6 (VBO)	273 g

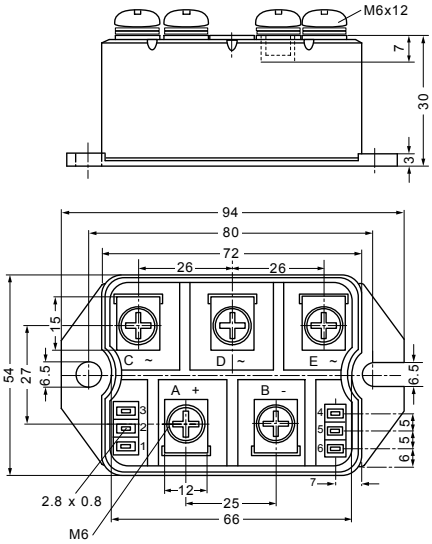

X123 PWS-E Flat Weight = 220 g

h: w/o terminal 1, 2, 3, 4, 5 & 6 (VUO)

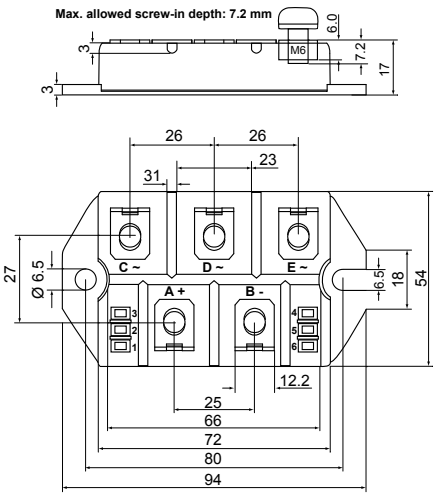

X125 TO-240 AA Weight =

a: + Kelvin contact (MCC)	81 g
b: + Kelvin contact, w/o pin 6 & 7 (MCD)	81 g
c: w/o Kelvin contact 4 & 7 (MCC)	81 g
d: w/o Kelvin contact 4, 7 & pin 6 (MCD)	81 g
e: w/o pin 4, 5, 6 & 7 (MDD)	81 g
f: w/o terminal 2 and pin 4 & 7 (VMO)	74 g
g: + Kelvin contact, w/o pin 7 (VMM)	81 g

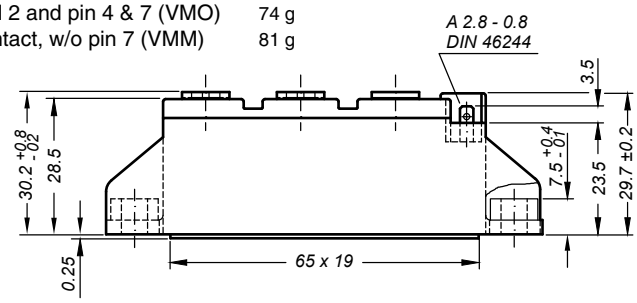

General tolerance: DIN ISO 2768 class „c“

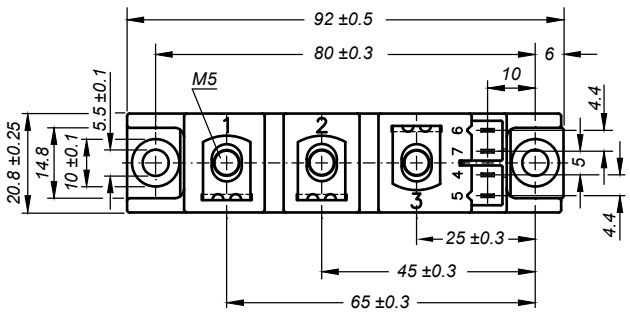

Optional accessories: Keyed gate/cathode twin plugs
Wire length: 350 mm, gate = white, cathode = red
UL 758, style 3751
*Type **ZY 200L** (L = Left for pin pair 4/5)*
*Type **ZY 200R** (R = Right for pin pair 6/7)*

IXYS

Dimensions in mm and inches (1 mm = 0.0394“)

X126 Y4-M6

	Weight =
a: + Kelvin cont., w/o pin 8 up to 11 (MCC)	131 g
b: + Kelvin cont., w/o pin 6 up to 11 (MCD)	131 g
c: w/o pin 4 up to 11 (MDD)	126 g
d: w/o terminal 2 & pin 4 up to 11 (MEO)	108 g

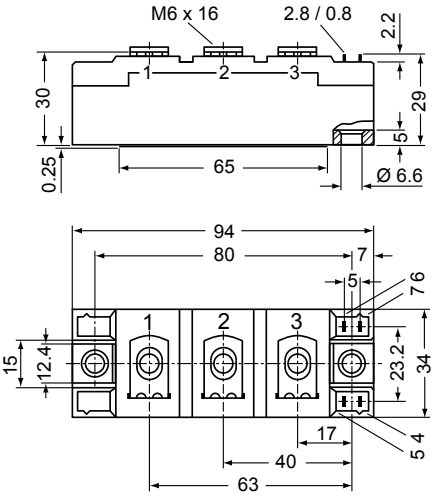

Optional accessories for modules
Keyed gate/cathode twin plugs with wire length = 350 mm, gate = white, cathode = red
Type ZY 180L (L = Left for pin pair 4/5) } UL 758, style 3751
Type ZY 180R (R = Right for pin pair 6/7) }

X127 Y4-M5

	Weight =
a: w/o pin 8 up to 11 (MII)	110 g
b: w/o pin 6 up to 11 (MID)	108 g
c: w/o pin 4, 5 & 8 up to 11 (MDI)	108 g

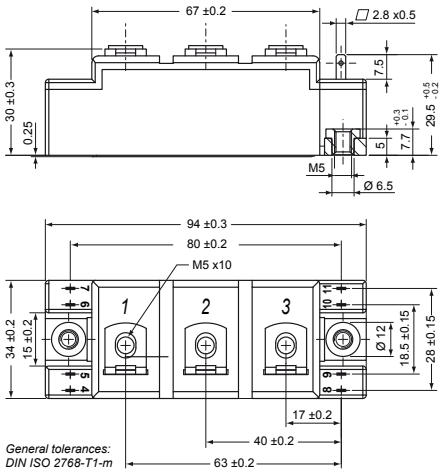

X128 Y3-DCB

	Weight =
a: w/o pin 4 up to 7 (VMM, MII)	222 g
b: w/o pin 4 up to 9 (MID)	220 g
c: w/o pin 4 up to 7, 10 & 11 (MDI)	220 g
d: w/o terminal 3 & pin 6 up to 11 (VMO)	200 g

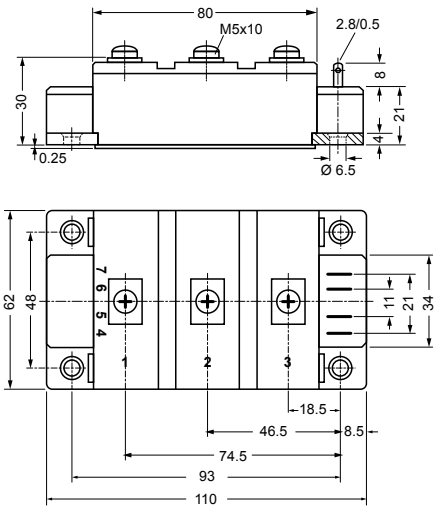

X129 Y2-DCB

	Weight =
a: + Kelvin contact (MCC)	245 g
b: + Kelvin contact, w/o pin 6 & 7 (MCD)	245 g
c: w/o pin 4, 5, 6 & 7 (MDD)	244 g

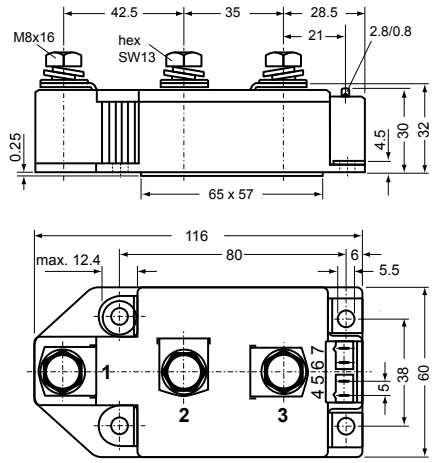

X130 Y3-Li

	Weight =
a: w/o pin 4-7, low inductance (VMM, MII)	226 g
b: w/o pin 4-9, low inductance (MID)	226 g
c: w/o pin 4-7, 10&11, low inductance (MDI)	226 g
d: w/o terminal 1&pin 6-11, low ind. (VMO)	206 g
e: w/o pin 4&5, low ind. (VMM, MII+NTC)	226 g
f: w/o pin 4, 5, 8 & 9, low ind. (MID+NTC)	226 g

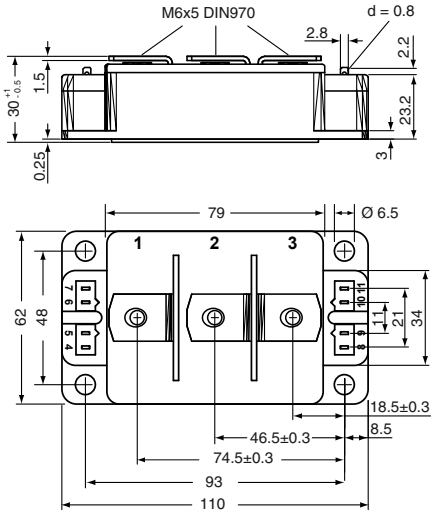

X131 Y1-CU

	Weight =
a: + Kelvin contact (MCC)	680 g
b: + Kelvin contact, w/o pin 6&7 (MCD)	680 g
c: w/o pin 4, 5, 6 & 7 (MDD)	680 g

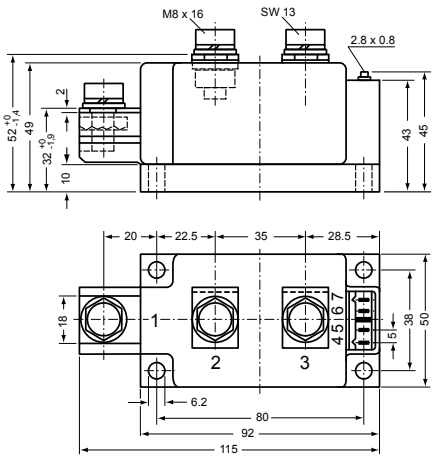

Optional accessories for modules
Keyed gate/cathode twin plugs with wire length = 350 mm, gate = white, cathode = red
Type ZY 180L (L = Left for pin pair 4/5) } UL 758, style 3751
Type ZY 180R (R = Right for pin pair 6/7) }

IXYS

Dimensions in mm and inches (1 mm = 0.0394“)

X132 Y1-2-CU

	Weight =
a: + Kelvin contact and pin 6&7 (MCO)	650 g
b: w/o pin 4, 5, 6 & 7 (MDO)	650 g

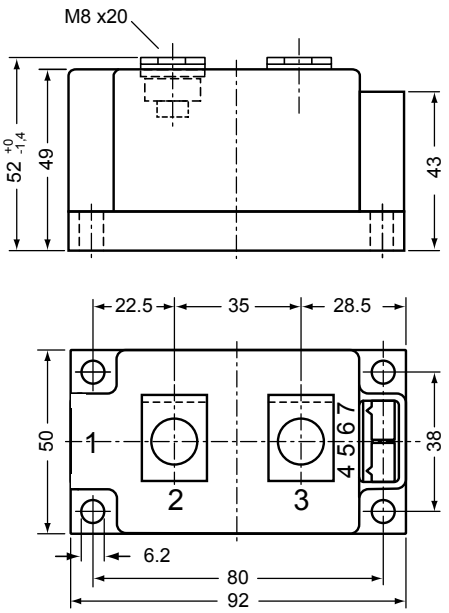

X141 SimBus A

Weight = 150 g

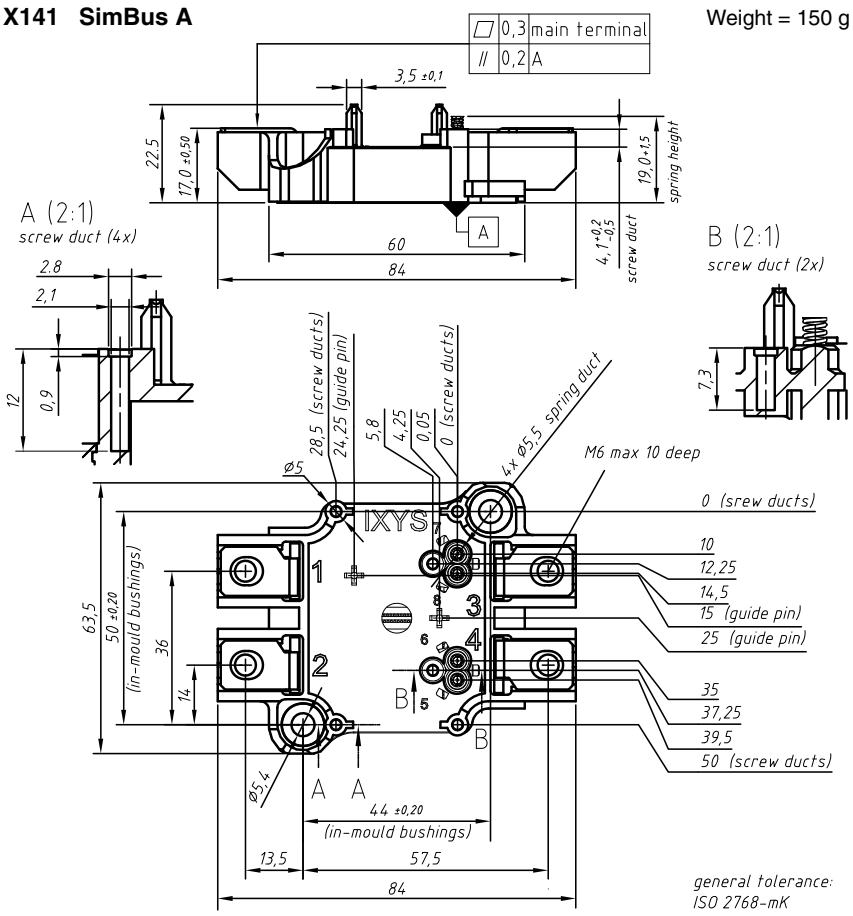

X142a ComPack

Weight = ??? g

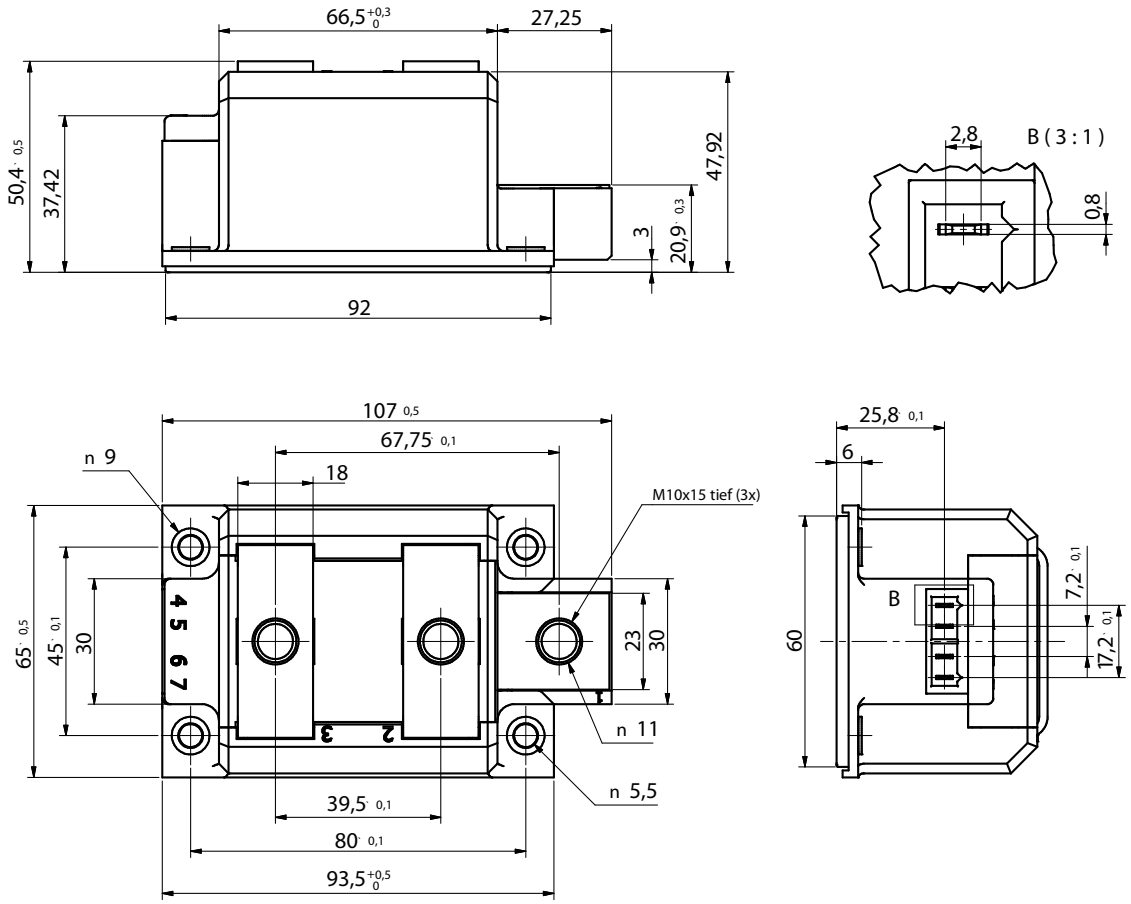

Outline drawings

Dimensions in mm and inches (1 mm = 0.0394“)

X143a SimBus F Weight = 150 g

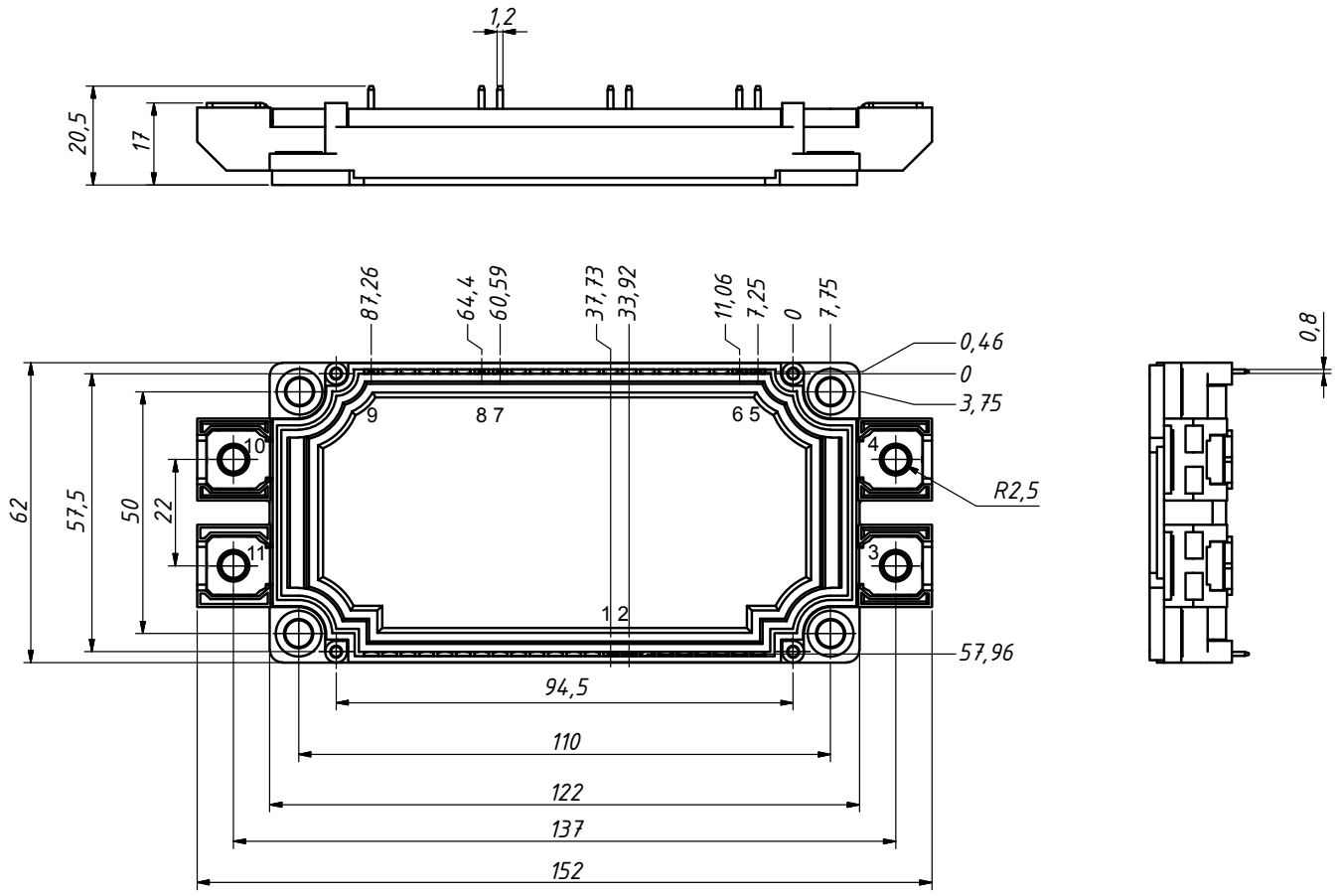

X144 SimBus P Weight = 1200 g

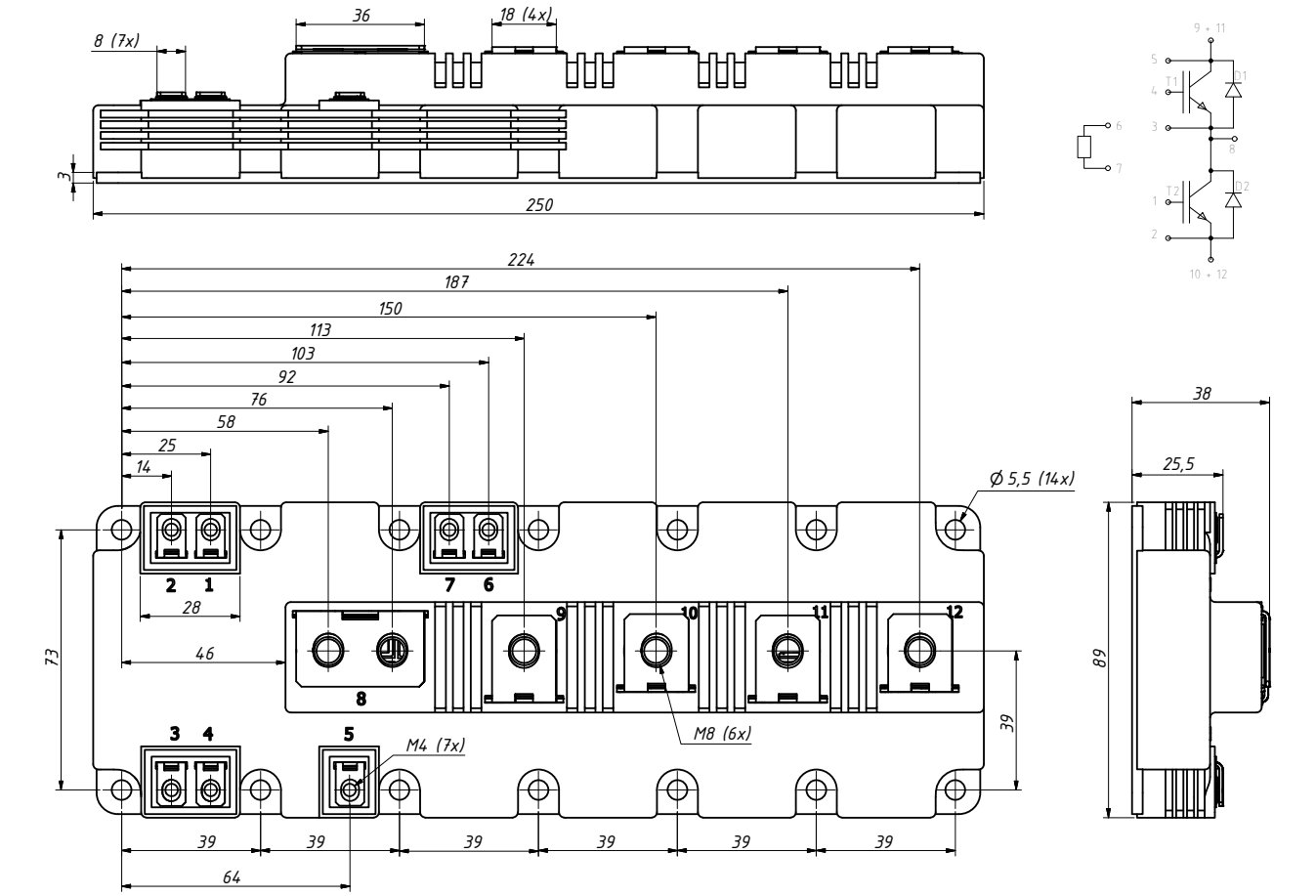

Outline drawings

IXYS

Dimensions in mm and inches (1 mm = 0.0394“)

X200 Metal-can Weight = 2.5 g

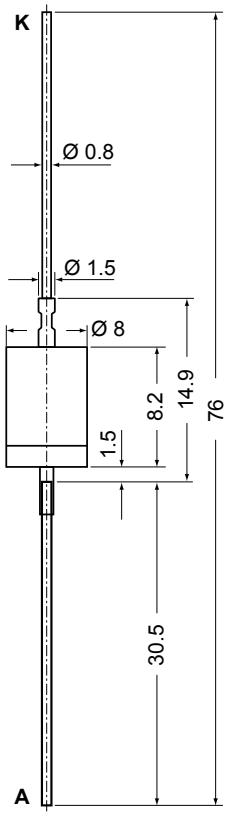

X201 FP-Case (oilproof) Weight = 0.9 g

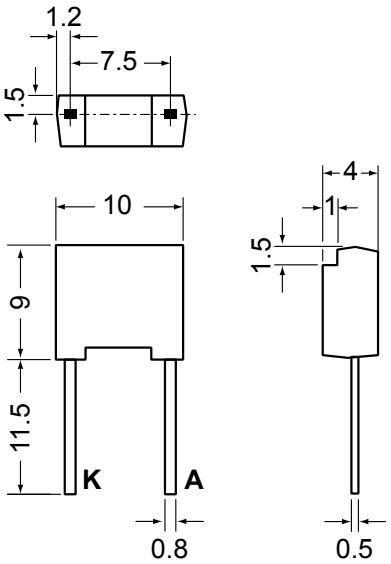

X202 BOD-Package Weight = 9.5 g

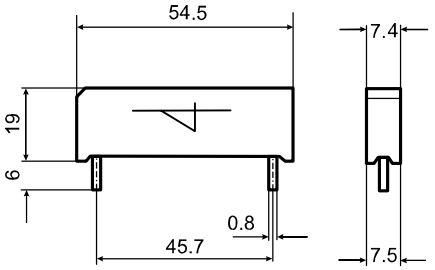

X203 TO-204 AE Weight = 18 g

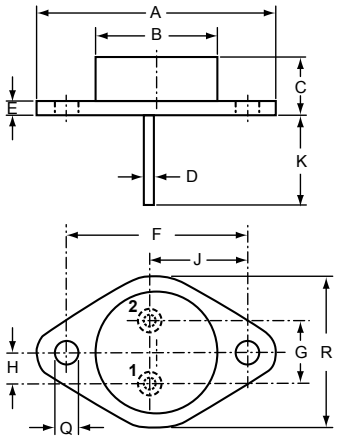

Dim.	Millimeter		Inches	
	Min.	Max.	Min.	Max.
A	38.61	39.12	1.520	1.540
B	-	22.22	-	0.875
C	6.40	11.4	0.252	0.449
D	1.45	1.60	0.057	0.063
E	1.52	3.43	0.060	0.135
F	30.15 BSC		1.187 BSC	
G	10.67	11.17	0.420	0.440
H	5.21	5.71	0.205	0.225
J	16.64	17.14	0.655	0.675
K	11.18	12.19	0.440	0.480
Q	3.84	4.19	0.151	0.165
R	25.16	26.66	0.991	1.050

X204 DO-203 AA [M] (DO-4) Weight = 6 g

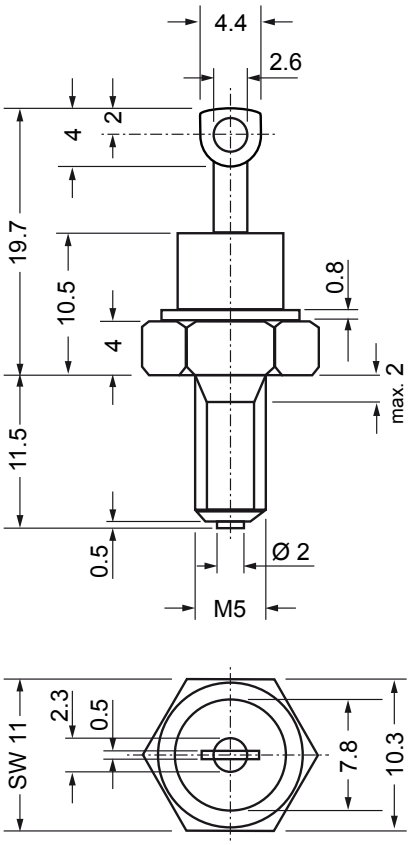

X205 DO-203 AA [UNF] (DO-4) Weight = 5.5 g

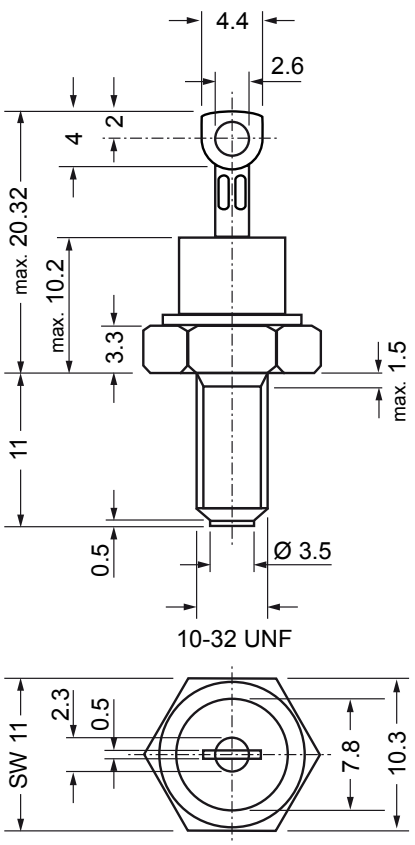

IXYS

Dimensions in mm and inches (1 mm = 0.0394“)

X206a DO-203 AB [UNF] (DO-5)
X206b DO-203 AB [M] (DO-5)
Weight = 14 g

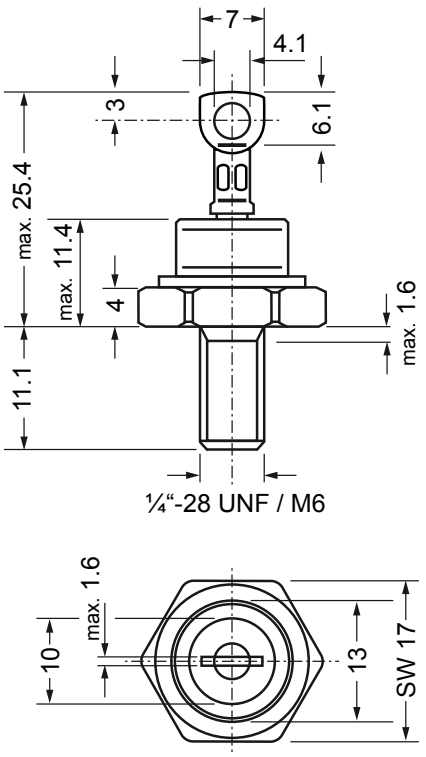

X207 DO-203 AB (DO-5) Weight = 20 g

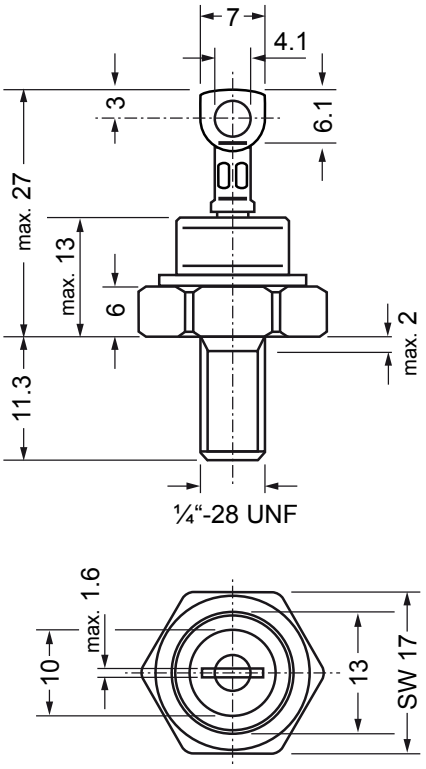

X209 TO-208 AA (TO-48) Weight = 11.6 g

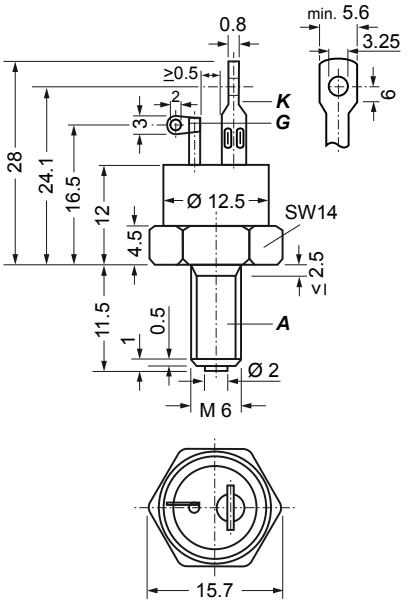

X210 TO-208 AC (TO-65) Weight = 21.7 g

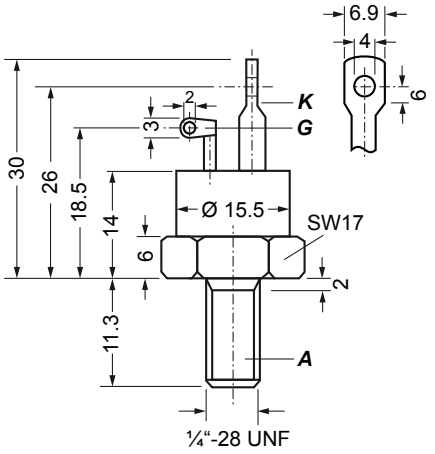

Outline drawings

IXYS

Dimensions in mm and inches (1 mm = 0.0394“)

X251 UGE-single Weight = 125 g

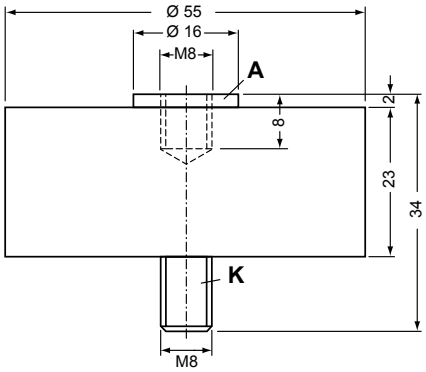

X252 UG Weight = 155 g

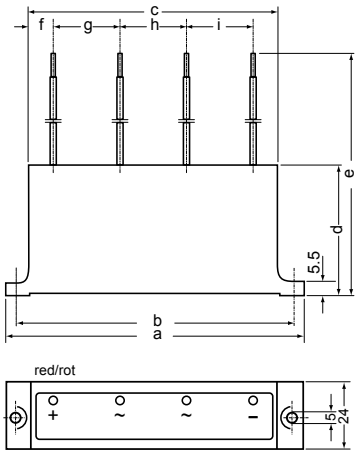

X253a UG Weight = 310 g

b: w/o middle terminal

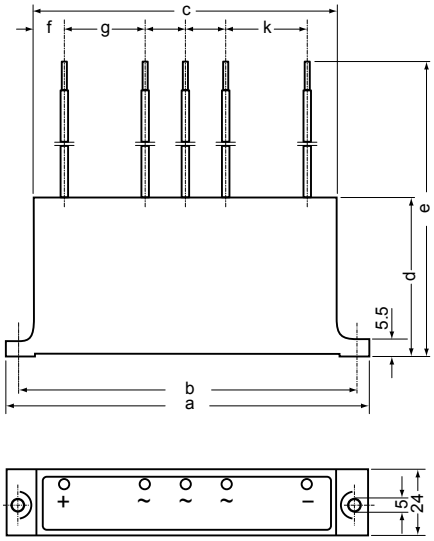

Type	a	b	c	d	e	f	g	h	i	k
UGB 3132 AD	80	70	57	58.5	260	6	15	15	15	
UGB 6124 AG	135	125	112	58.5	260	11	32.5	25	32.5	
UGD 6123 AG	135	125	112	58.5	260	8	30	18	18	30
UGD 8124 AG	135	125	112	58.5	260	8	30	18	18	30

Dimensions in mm

X254 VG-A Weight = 61 g

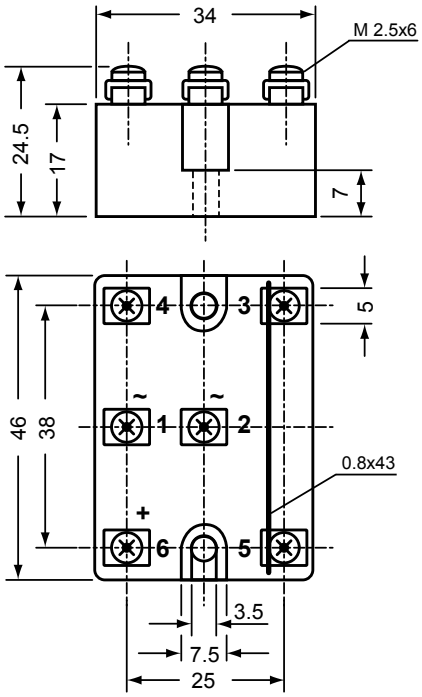

X255 VG-B Weight = 87 g

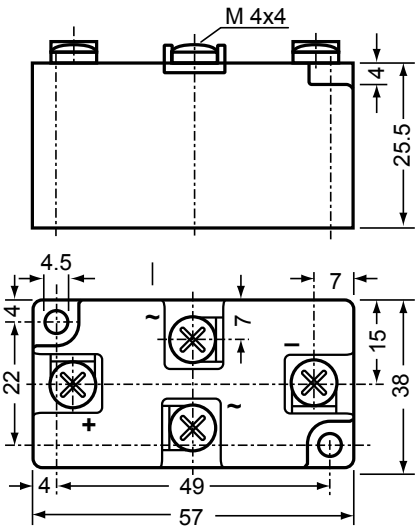

X256 VG-C Weight = 50 g

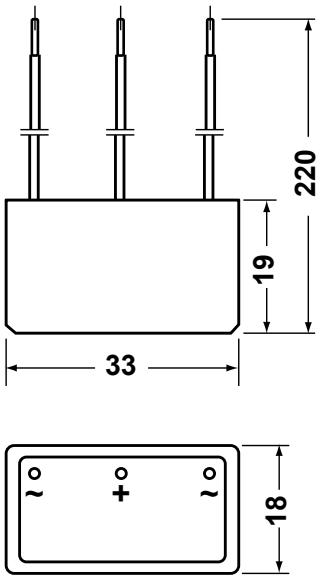

Outline drawings

IXYS

Dimensions in mm and inches (1 mm = 0.0394“)

X502 8-Pin P-DIP

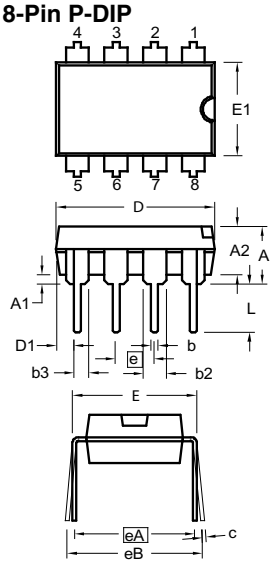

Dim.	Millimeter		Inches	
	min	max	min	max
A	3.56	4.57	0.140	0.180
A1	0.38	1.02	0.015	0.040
A2	3.18	3.68	0.125	0.145
b	0.38	0.51	0.015	0.020
b2	1.40	1.65	0.055	0.065
b3	0.89	1.14	0.035	0.045
c	0.23	0.30	0.009	0.012
D	9.02	10.16	0.355	0.400
D1	0.25	1.02	0.010	0.040
E	7.62	8.26	0.300	0.325
E1	6.10	6.86	0.240	0.270
e	2.54 BSC		0.100 BSC	
eA	7.62 BSC		0.300 BSC	
eB	7.62	10.92	0.300	0.430
L	3.05	3.56	0.120	0.140

X512 8-pin SOIC/SOP
X512a 8-pin SOIC-CT/SOP-CT

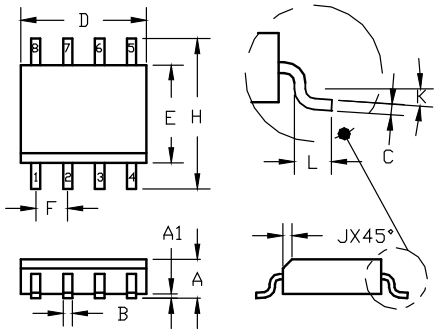

Dim.	Millimeter		Inches	
	min	max	min	max
A	1.35	1.75	0.053	0.069
A1	0.10	0.25	0.004	0.010
B	0.33	0.51	0.013	0.020
C	0.19	0.25	0.007	0.010
D*	4.80	5.00	0.189	0.197
E*	3.80	4.00	0.150	0.158
E1	6.10	6.86	0.240	0.270
F	1.27 BSC		0.050 BSC	
H	5.8	6.2	0.229	0.244
J	0.25	0.50	0.010	0.020
K	0°	8°	0°	8°
L	0.40	1.27	0.016	0.050

* do not include Mold protrusions

X532 8-Pin DFN 4x5

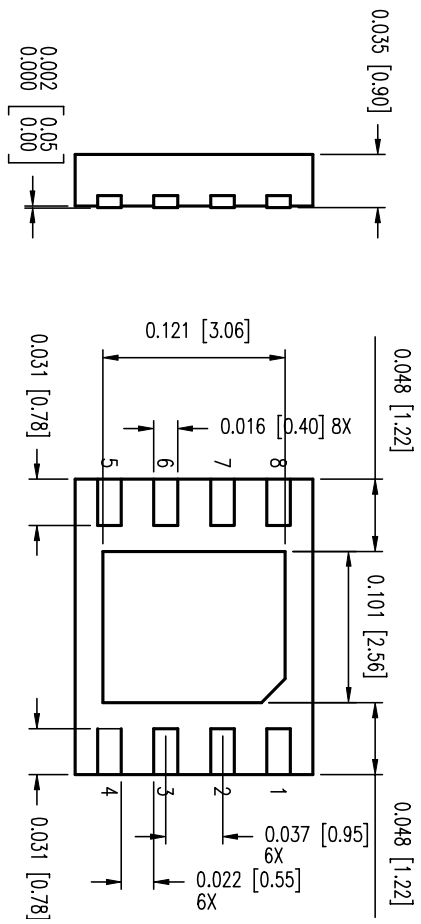

D5 DE475

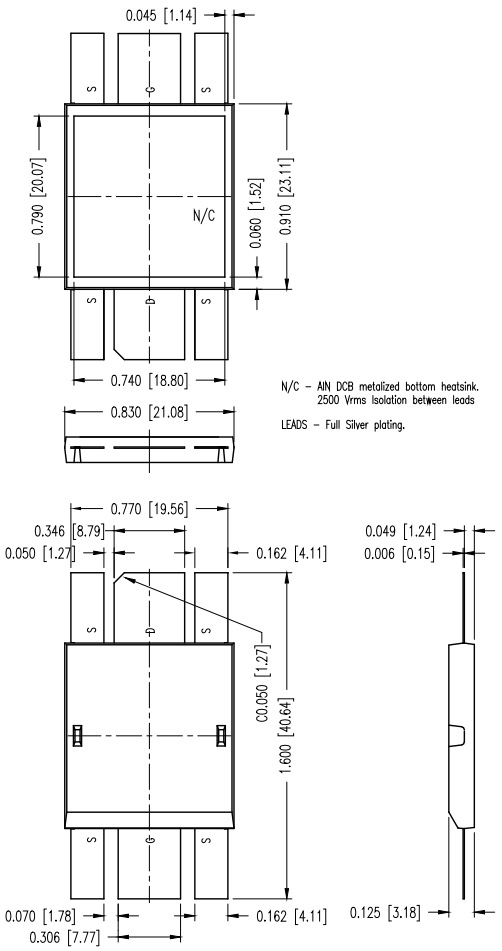

Application Notes Highlights

further information and downloads see www.ixys.com

IXYS

Power Factor Correction	
IXAN0001	3-Phase PFC using Vienna Rectifier Approach and Modular Construction for Improved Overall Performance, Efficiency and Reliability
IXAN0002	Single and Three-Phase Rectifiers with Active Power Factor Correction for Enhanced Mains Power Quality
IXAN0003	Rectifiers with Power Factor Correction
IXAN0004	Design and Experimental Investigation of a Three-Phase, High Power Density, High Efficiency, Unity Power Factor PWM (VIENNA) Rectifier Employing a Novel Integrated Power Semiconductor Module
IXAN0005	Status of the Techniques of Three-Phase Rectifier Systems with Low Effects on the Mains
MOSFETs and IGBTs Drivers	
IXAN0012	MOSFET/IGBT Drivers - Theory and Applications
IXAN0011	Driving Your MOSFETs Wild to Obtain Greater Efficiencies, Power Densities and Lower Overall Cost
BiMOSFETs Applications	
IXAN0013	Capacitor Charge/Discharge Circuits, utilizing High Voltage IGBTs and ZCS Resonant Mode Techniques
IXAN0014	Comparative Performance of BiMOSFETs in Fly-back Converter Circuits
IXAN0015	Use of BiMOSFETs in Modern Radar Transmitters
IXAN0016	IXBH40N160 BiMOSFET Developed for High Voltage and High Frequency Applications
IXAN0017	New 1600V BiMOSFET Transistors Open Up New Applications
Automotive Applications	
IXAN0018	A High Current Dual Inline Packaged Trench MOSFET Three Phase Full Bridge as Contribution to Automotive System Integration
IXAN0019	High Power TrenchMOSFETs Solutions in Automotive Designs
IXAN0020	Power Electronic Supply for Automotive Starter Generator
IXAN0021	New Trench Power MOSFETs in Isolated Packages
Isolation Techniques, Mounting, Soldering and Cooling	
IXAN0071	The SMPD Package and its Mounting Instructions
IXAN0022	Capitalizing on the Advantages of ISOPLUS Products
IXAN0023	General Mounting Instructions
IXAN0025	ISOPLUS-The Revolution in Discrete Isolation Technique
IXAN0026	Combining the Features of Modules and Discretes in a New Power Semiconductor Packages
IXAN0028	The Revolution in Discrete Isolation Technique
IXAN0030	Surface Mount Soldering Recommendations for TO-263 and TO-268 case styles
IXAN0031	New ISOPLU247 Power Package Features 2500V Internal Isolation Revolutionary Approach Improves Thermal Conductance and Reliability
Power Modules	
IXAN0034	Recommended Use of the Integrated NTC Thermistor Temperature Sensor in IXYS Power Modules
IXAN0035	Mounting Instructions for _A7, _E7, _A8 and _E8 Module Series
IXAN0036	Investigations on Electromagnetic Compatibility of Power Semiconductor Modules Integrated in a Module
IXAN0037	Power Cycle Capability of solder contact DCB-Modules
FREDs and Schottky Diodes	
IXAN0042	Is the Lowest Forward Voltage Drop Schottky Diode Always the Best Choice?
IXAN0043	Input Rectifiers with Semifast Diodes for DC link.
IXAN0044	Characteristics and Applications of Fast Recovery Epitaxial Diodes.
IXAN0060	Optimized Ultra Fast Diodes for Switching Applications
Power MOSFETs	
IXAN0057	Series Operation of MOSFET and IGBT Switches
IXAN0061	Power MOSFET Basics
IXAN0062	IXYS Power MOSFET Products
IXAN0063	Application note on Depletion-mode
IXAN0064	IXYS P-Channel MOSFET
IXAN0065	IXYS Power MOSFET Datasheet Parameters Definition
IXAN0068	Linear Power MOSFETS Basic and Application
IXAN0069	Synchronous DC to DC Converter Design
IGBTs	
IXAN0063	IGBTs
IXAN0070	Drive with the IXYS XPT IGBT
IXAN0072	Discrete 600V GenX3 XPT IGBTs

Mouser Electronics

Authorized Distributor

Click to View Pricing, Inventory, Delivery & Lifecycle Information:

IXYS:

IXA90IF650NA IXB200I600NA IXB80IF600NA