USB Type-C Demo Kit V2 Board User Guide

EB99 Version 1.2, December 2015

Introduction

The USB Type-C Demo Kit V2 has been developed to support a variety of demos, encompassing different levels of the USB Type-C functionality which includes Power Delivery and negotiation, power and data role swap, control channel negotiation, super speed signaling, DP alternate mode support and a low speed signal aggregation function. There are two versions of this board, as identified by the Ordering Part Numbers (iCE40LP8K-USBC-EVN and iCE5LP4K-USBC-EVN). This document is applicable to either version, with the notes as applicable.

The main circuits on the development kit board:

- Programming Circuit
  - — Mini-USB Type B connector to FTDI
  - — FTDI to MachXO2™ Programming Mux
- MachXO2-4000ZE
  - — Programming Multiplexing
  - — Signal Generator and Receiver for aggregation
  - — General Purpose I/O
  - — LED Display Control
- iCE40LP-8K (iCE40LP8K-USBC-EVN only)
  - — Super-speed signaling control
  - — CD-PD physical layer and power delivery manager
  - — Billboard support
  - — DP alternate mode support and control
  - — Aggregator support
  - — AP interface
  - — Data logging
- iCE5LP-4K (iCE5LP4K-USBC-EVN only)
  - — Super-Speed signaling Control
  - — CD-PD physical layer and power delivery manager
  - — AP interface
  - — Data logging

Note: The iCE40LP8K-USBC-EVN board from Lattice is hardwired to behave as a UFP_D (DisplayPort UFP) device. If you need to test DFP_D (DisplayPort DFP) functionality, apply the following changes on the board:

- *R199,R201,R203,R205,R207,R209,R211,R213,R215,R217 - Do Not Populate*
- *R198,R200,R202,R204,R206,R208,R210,R212,R214,R216 - Populate*

Key Components

Figure 1 is the top view of the USB Type-C Demo Kit V2 Board showing the key components present on the board.

Figure 1. Top View of USB Type-C Demo Kit V2 Board with Key Components

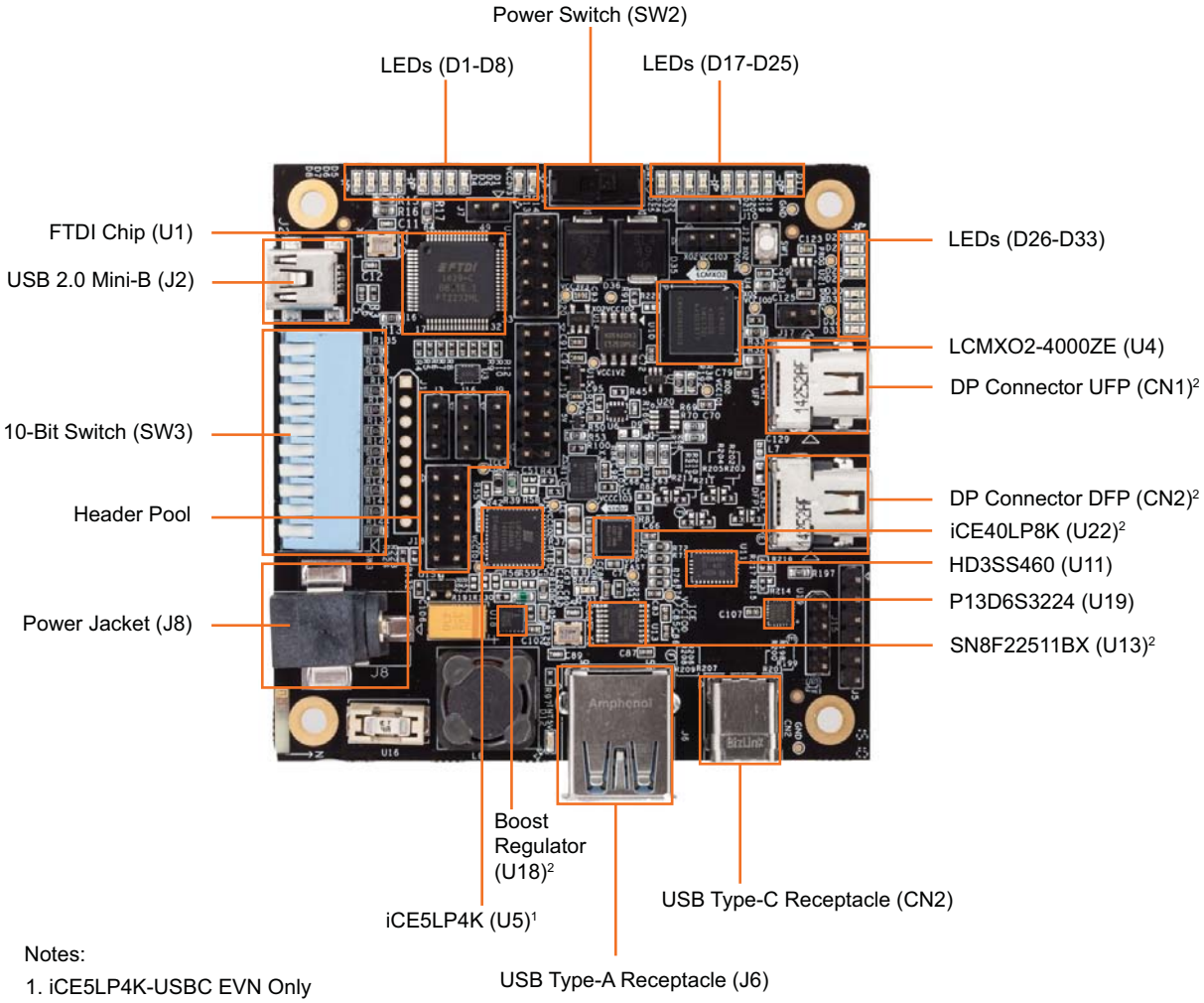

Notes:

1. iCE5LP4K-USBC EVN Only
2. iCE40LP8K-USBC EVN Only

Headers and Test Connectors

Figure 2 shows the top view of the demo board. The numbers of headers and test connectors which provide access to USB Type-C Demo Kit V2 Board circuits are indicated.

Figure 2. Top View of the USB Type-C Demo Kit V2 Board with Headers and Test Connectors

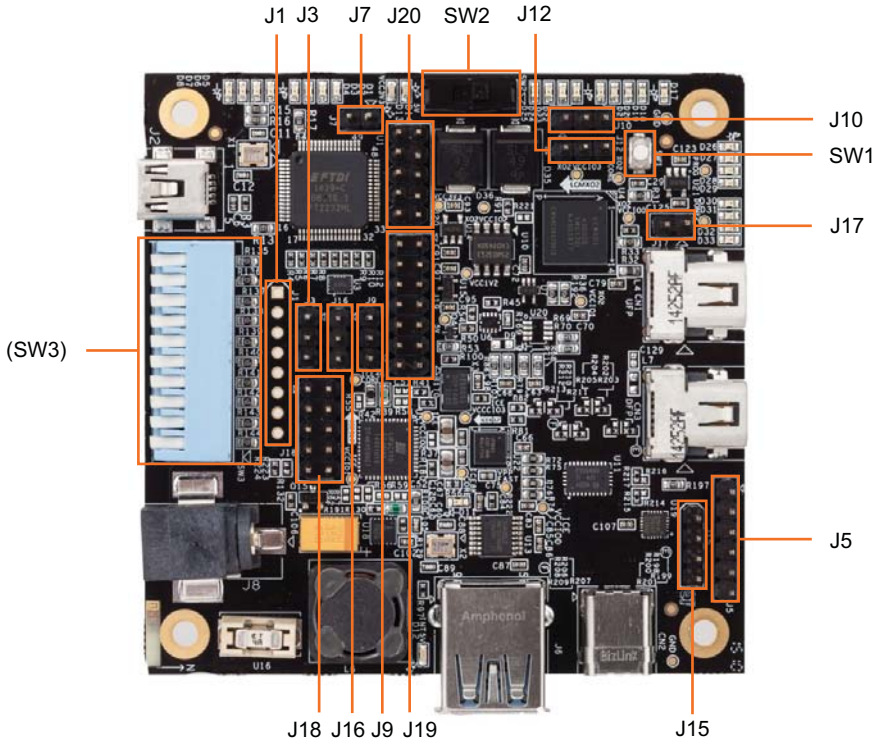

Table 1 provides the detailed definition of the headers and test connectors.

Table 1. Headers and Test Connectors

Part	Description	Setting Options	Default Setting
J1	External JTAG I/F		
J3	JTAG/SPI Selection	1-2 (SPI), 2-3 (JTAG)	JTAG
J16	JTAG/I2C Selection	1-2 (JTAG), 2-3 (I2C)	JTAG
SW1	MachXO2 Reset Switch		
J17	Jumper for DP Power	Open-Off, Short-On	Open
J5	BB Device Programmer I/F		
SW2	Board Power Switch	Left-On, Right-Off	Right
J7	VBUS Sink Connector	Open-Off, Short-On	Open
SW3	General Purpose Input Switch		
J9	USB Role Selection	1-2 (UFP), 2-3 (DFP)	Open
J10	MachXO2 I/O HIZ Enable	1-2 (Enable), 2-3 (Disable)	Open
J15	For Testing/Probing		
J12	MachXO2 I/O Direction Input	1-2 (Input), 2-3 (Output)	Open
J20	For Testing/Probing		
J18	External I2C I/F		
J19	External AGG Inputs		

Programming Circuit

The Mini-USB Type B connector is used for programming the board, using the standard Diamond Programmer software. Figure 3 shows the programming block of the USB Type-C Demo Kit V2.

The Mini-USB Type B connector interfaces with the FTDI FT2232H IC. The FTDI IC works with Diamond programmer to provide interfaces for JTAG (for programming MachXO2-4000ZE) and SPI (for programming both the iCE40™ LP and iCE40 Ultra™ devices and their SPI Flash Memories). The SPI programming works in conjunction with a mux design that must be programmed into the MachXO2-4000ZE. The mux design operation and required switch settings are described in detail in the next section. When the MachXO2 device contains the mux design and the proper switch settings are chosen, the Diamond Programmer interfaces directly with the iCE40 devices or SPI Flashes.

Figure 3. Programming Block

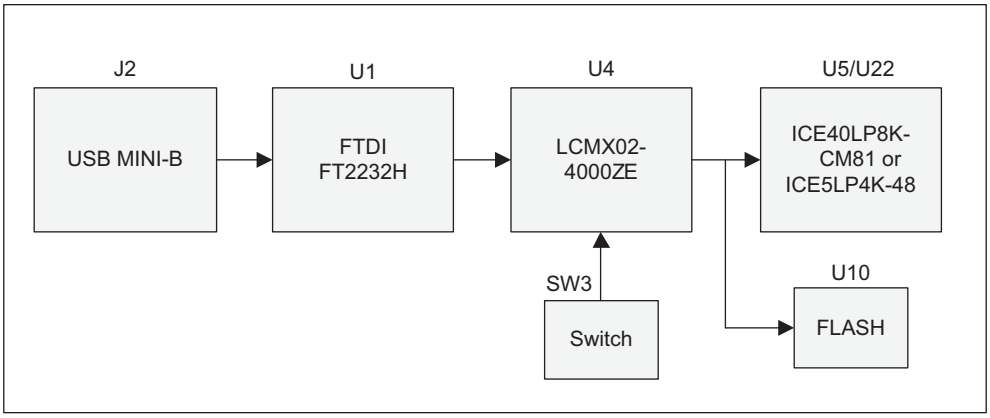

Programming Mux and Switch Settings

The board allows for programming the various devices contained on the USB Type-C Demo Kit V2:

- MachXO2 (LCMXO2-4000ZE-1MG132C) – U4
- iCE40 LP (iCE40LP8K-CM81) – U22
  - — Configuration or Programming
  - — iCE40 Ultra External SPI Flash – U10
    - — Micron Technology Inc. (N25Q032A13ESC40F)
  - — CDONE LED (Red) – D11
- iCE40 Ultra (iCE5LP4K-SG48) – U7
  - — Configuration or Programming
  - — iCE40 Ultra External SPI Flash - U6
    - — Micron Technology Inc (N25Q032A13ESC40F)
  - — CDONE LED (Green) – D9
- iCE40 Device CRESETB can be asserted by pushing SW1
  - — Routed through MachXO2 device

Figure 4 shows the DIP switch numbering and settings.

Figure 4. DIP Switch Numbering

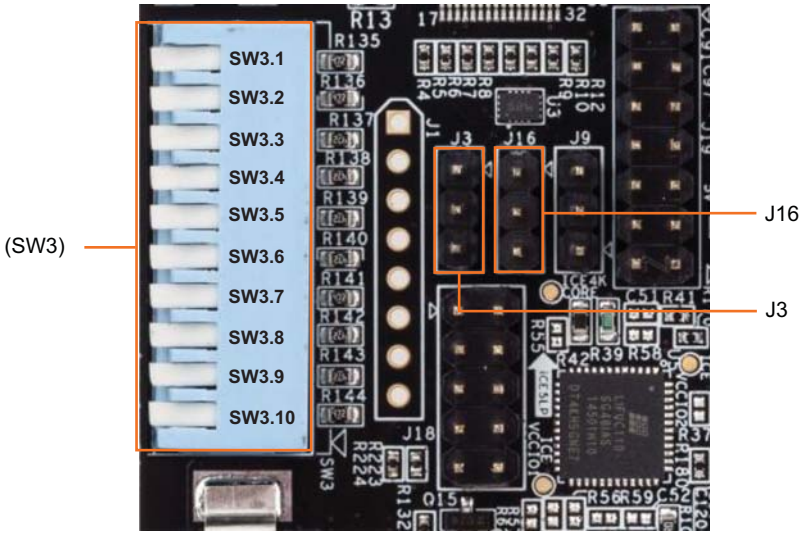

Two positions of the DIP switch SW3 and the header J3 are used to control which devices and which mode the FTDI Bridge utilizes. Table 2 provides the detailed definitions of the DIP switch settings required to program each device.

Table 2. DIP Switch Settings to Program the Device

Device	Operation	Mode	Jumper Position		DIPSW (SW3) Position	
			J16	J3	SW3.1	SW3.2
MachXO2	Program/Configure	JTAG	1-2	3-2	Up	Down
iCE40 CRAM	Program/Configure	SPI	1-2	1-2	Down	Down
iCE40 Flash	Program/Configure	SPI	1-2	1-2	Down	Up
(All)	Boot	—	3-2	—	Up	Up

Note: The MachXO2 must be programmed with an image containing the SPI programming multiplexing and CRESET level-shifting driver (for example, the default image asdf.jed) prior to programming or configuring the iCE40 devices or their subtended SPI Flash devices.

Status Indicators

The board provides the number of LED status indicators, shows power, configuration, and an application status. Table 3 provides the detailed definition of the Status LED I/O Map.

Table 3. Status LED I/O Map

Device	I/O Balls	LED	Schematic NET	Bank	Color
LCMX02-4000ZE	B1	D1	AGG_LED1	3	Green
LCMX02-4000ZE	B2	D2	AGG_LED2	3	Green
LCMX02-4000ZE	C1	D3	AGG_LED3	3	Green
LCMX02-4000ZE	C2	D4	AGG_LED4	3	Green
LCMX02-4000ZE	C3	D5	AGG_LED5	3	Green
LCMX02-4000ZE	D1	D6	AGG_LED6	3	Green
LCMX02-4000ZE	E1	D7	AGG_LED7	3	Green
LCMX02-4000ZE	E2	D8	AGG_LED8	3	Green
LCMX02-4000ZE	J3	D17	STATUS_LED1	3	Blue
LCMX02-4000ZE	K1	D20	STATUS_LED2	3	Blue
LCMX02-4000ZE	K2	D22	STATUS_LED3	3	Green
LCMX02-4000ZE	K3	D23	STATUS_LED4	3	Green
LCMX02-4000ZE	L3	D26	STATUS_LED5	3	Red
LCMX02-4000ZE	M1	D27	STATUS_LED6	3	Red
LCMX02-4000ZE	M2	D30	STATUS_LED7	3	Yellow
LCMX02-4000ZE	N9	D31	STATUS_LED8	2	Yellow
LCMX02-4000ZE	N10	D33	STATUS_LED9	2	Yellow
LCMX02-4000ZE	P2	D18	STATUS_LED10	2	Blue
LCMX02-4000ZE	P4	D19	STATUS_LED11	2	Blue
LCMX02-4000ZE	P6	D21	STATUS_LED12	2	Green
LCMX02-4000ZE	P7	D23	STATUS_LED13	2	Green
LCMX02-4000ZE	P8	D25	STATUS_LED14	2	Green
LCMX02-4000ZE	P9	D28	STATUS_LED15	2	Blue
LCMX02-4000ZE	P11	D29	STATUS_LED16	2	Blue
LCMX02-4000ZE	P12	D32	STATUS_LED17	2	Blue
ICE5LP4K	7	D9	4KDONE	2	Red
ICE40LP8K	E6	D11	CDONE	2	Red

MachXO2-4000ZE Circuit Overview

LCMXO2-4000ZE-1MG132C

The MachXO2 device (LCMXO2-4000ZE-1MG132C) on the board performs a variety of functions:

- Programming Multiplexing
  - — Interface from PC/FTDI to iCE5LP, iCE40LP, and SPI Flash memories
- Signal Aggregator Demo Function
  - — Includes interface to iCE40LP8K
- General Purpose I/O from DIP switches and LEDs

The USB demo design includes bitstreams for the MachXO2.

Note: Refer to the documents accompanying each demo for details on the specific design function of the MachXO2.

Tables provide the detailed definition of the different functions:

- LED Indication (Table 3)
- Switches (Table 4)
  - — DIP Switches
  - — Push Button
  - — 3-pin Headers
- iCE40LP8K/iCE5LP4K Interface (Table 5)
- External Application Processor Interface (Table 6)

Table 4 provides the detailed definition of the I/O Map for the device MachXO2 general purpose functions.

Table 4. Switches / I/O Map for MachXO2

Device	I/O Ball	Schematic Net	Bank	Designator
LCMX02-4000ZE	B9/B12	CONFIG_SW1	0	SW3
LCMX02-4000ZE	B14	CONFIG_SW2	1	SW3
LCMX02-4000ZE	C13	CONFIG_SW3	1	SW3
LCMX02-4000ZE	C14	SW4	1	SW3
LCMX02-4000ZE	D12	SW5	1	SW3
LCMX02-4000ZE	E12	SW6	1	SW3
LCMX02-4000ZE	E13	SW7	1	SW3
LCMX02-4000ZE	E14	SW8	1	SW3
LCMX02-4000ZE	F12	SW9	1	SW3
LCMX02-4000ZE	F13	SW10	1	SW3
LCMX02-4000ZE	A2	XO2_RESET	0	SW1
POWER	—	5V	—	SW2

Table 5. Aggregator I/O Map for MachX02

MACHX02(U4)		ICE40LP8K(U22)		HD3SS460(U11) Pin Number	Schematic Net
I/O Ball	Bank	I/O Ball	Bank		
F1	3	B6	0	—	AGG_GPIO1
F2	3	A6	0	—	AGG_GPIO2
F3	3	B5	0	—	AGG_GPIO3
G3	3	A4	0	—	AGG_GPIO4
H1	3	B4	0	—	AGG_GPIO5
H2	3	D5	0	—	AGG_GPIO6
H3	3	E5	0	—	AGG_GPIO7
J1	3	A3	0	—	AGG_GPIO8
B8	0	A8	0	—	SDA1
C8	0	B8	0	—	SCL1
A9	0	B7	0	—	SDA2
A7	0	A7	0	—	SCL2
		A2	0	13	AUX_CHP
		A1	0	14	AUX_CHN

The MachXO2-4000ZE and an iCE40LP8k/iCE5LP4K provides connections to the header J18 (Embedded controller connector). Table 6 provides the detailed definition of the signals.

Table 6. AP Interface for MachXO2, iCE40LP/iCE5LP and J18

iCE40LP8K(U22)		iCE5LP4K(U5)		XO2(U4)		J18	Schematic Net Name
IO Ball	Bank	IO Ball	Bank	IO Ball	Bank		
G7	SPI	15	2	M7	2	1	SPI_SCK
G4	2	18	2	N4	2	3	EC_CS
G6	SPI	14	2	M9	2	5	SPI_MISO
H7	SPI	17	2	M8	2	8	SPI_MOSI

iCE40LP8K

The iCE40LP8K (U5/U22) is one of the devices on the board used to demonstrate the Lattice Type-C Power Delivery (PD) management and Cable Detect (CD) solution. In order to support the variety of demos, the iCE device provides multiple parallel and serial connections to the MachXO2 device on the board. Table 5 and Table 6 provide the detailed definition of the connections. Both the devices are connected to the J18 (Embedded Controller header).

The iCE configuration may be stored in external SPI Flash (Refer the section Programming Mux and Switch Settings for more information. The external SPI Flash (U10) is connected to the configuration SPI port of the iCE device. These signals, along with the CDONE and CRESET signals from the iCE are connected to the MachXO2-4000ZE device to facilitate connection from the PC (for programming) to both the iCE and SPI Flash.

The 25 MHz oscillator X2 is used to provide an external clock signal to the iCE40LP device. This clock signal is also passed to the iCE5LP device. Table 7 provides the detailed definition of the clock connections.

Table 7. Clock Connections for iCE40LP

ICE40LP8K(U22)		ICE5LP4K(U5)		Schematic Net
IO Ball	Bank	IO Ball	Bank	Name
D8	1	20	2	CLK IN

Power Supply

Power supply to the development kit is by the MINI-USB Type-B connector or from an external adaptor. This connector provides 5 V source for the voltage regulators on the board which supply the power to MachXO2 and iCE devices on the board. Each IO and core voltage rail on the board is accessible by a test point on the board. The current flowing to each rail can also be measured using a 1Ω resistor placed in the path of each voltage rail.

Figure 5 shows the device power rails. There are three voltage regulators on the board used to supply the 3.3 V, 1.8 V, and 1.2 V rails. The input to these regulators is the 5 V rail on the board, which is supplied from either the MINI-USB Type-B connector or external power adaptor via switch SW2.

Figure 5. Device Power Rails

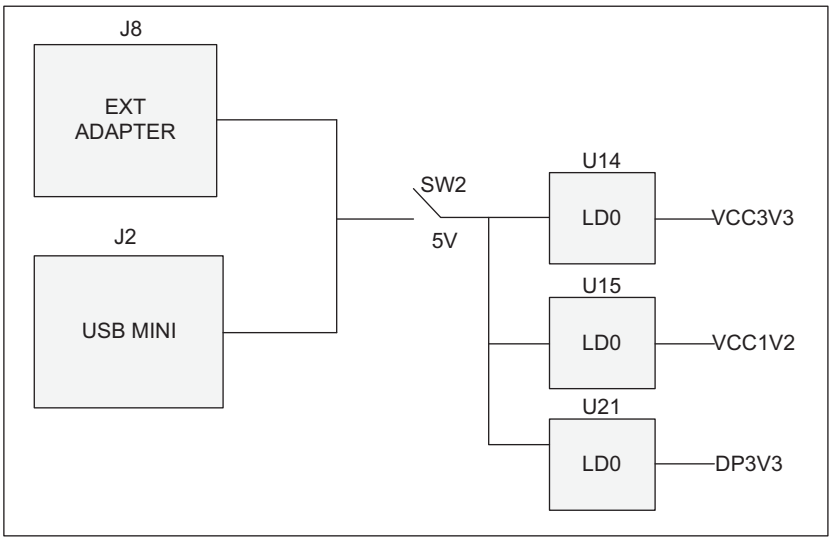

Several of the voltage rails also connect to indicator LEDs on the board to display the power status to the user. These LEDs are listed in Table 8.

Table 8. Voltage Rail Indicator LEDs

Voltage Rail	Indicator LED	Color
INT_5V	D12	Blue
VCC3V3	D14	Yellow
5V	D14	Yellow

The board voltage rails are summarized in Table 9, including the rail source voltage, test point #, and current sense resistor number.

Table 9. Device Power Rail Summary and Test Points

Voltage Rail	Source Rail	Sense Resistor	Test Point #
VCC_SPI	VCC3V3	—	TP18
VCONN_5V	5V	R106	—
XO2_VCCIO0	VCC3V3	R107	TP6
XO2_VCCIO1	VCC3V3	R109	TP8
XO2_VCCIO2	VCC3V3	R111	TP10
XO2_VCCIO3	VCC3V3	R113	TP12
ICEVCCIO0	VCC3V3	R108	TP7
ICEVCCIO1	VCC3V3	R110	TP9
ICEVCCIO2	VCC3V3	R112	TP11
ICEVCCIO3	VCC3V3	R114	TP13
XO2_CORE	VCC3V3	R102	TP4
ICE4K_CORE	VCC3V3	R104	TP5
ICE8K_CORE	VCC3V3	R105	TP16
DP3V3	INT_5V	—	—
5V	USB5V/EXT_5V	—	TP17
VBUS	EXT_5V	—	—

USB Super-Speed Switch/Alternate Mode Function

The development kit includes a super-speed switch IC (U11 - HD3SS460) along with a high-speed USB switch (U19 – PI3DBS3224). The super-speed switch IC is used to demonstrate the orientation-agnostic capability of the USB Type-C connector. The switches connect various USB sockets. Figure 6 shows the switch functions and the data flow diagram.

Figure 6. Super Speed Block

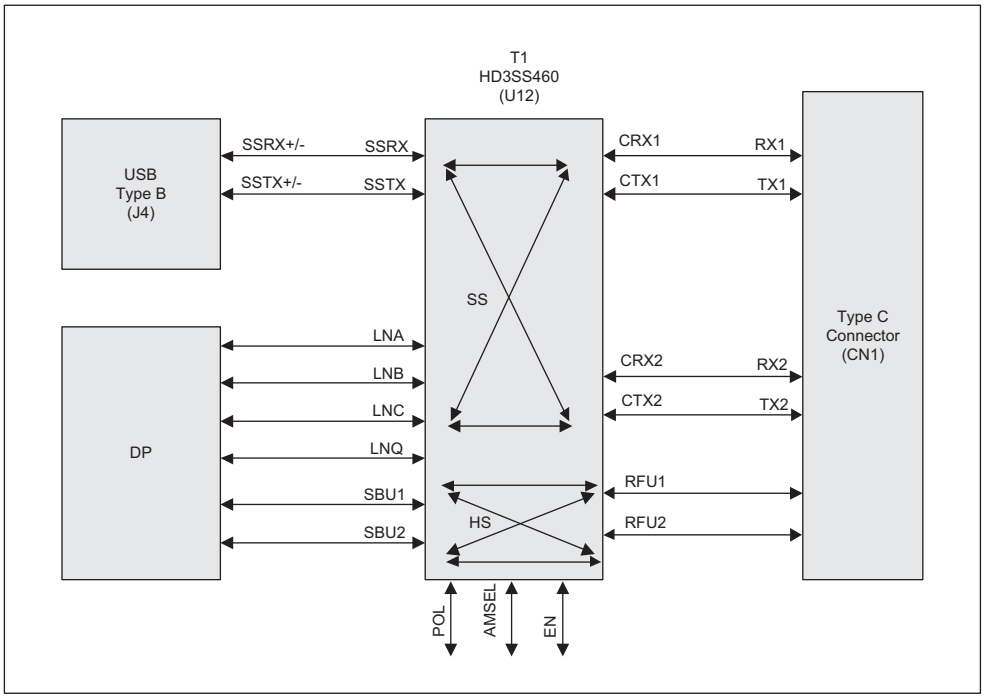

U11 is connected on one side to the standard-USB 9-pin connector (J6), the Mini DP connectors (CN1 and CN3) and the other side connected to the USB Type-C connector (CN1). J6 provides a bi-directional Super-Speed channel as well as a bi-directional High-Speed channel, with CN1, CN2 providing a unidirectional display source data. The U11 switch connection is managed by the iCE40 device on the board, using the SS_EN, SS_AMSEL, and SS_POL signal inputs to U11. For more information refer the documentation on the super-speed switch demo. Table 10 provides the detailed definition of the mode supported by the super speed switch.

Table 10. Modes Supported by Super Speed Switch

POL	AMSEL	EN	Configurations	High Speed Signal Flow	SBU Signal Flow
L	L	H	2CH USB SS + 2CH AM (Normal)	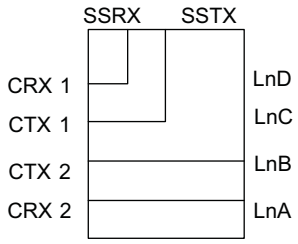	
H	L	H	2CH USBSS + 2CH AM (Flipped)	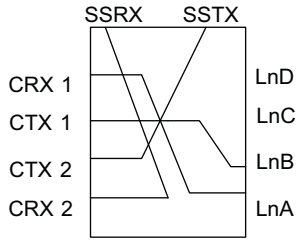	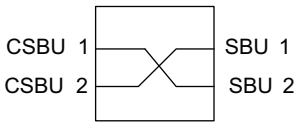
L	H	H	4CH AM (Normal)	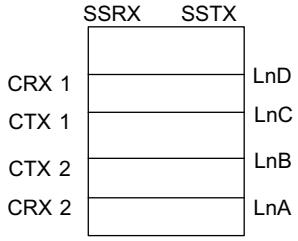	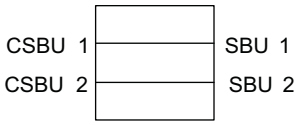
H	H	H	4CH AM (Flipped)	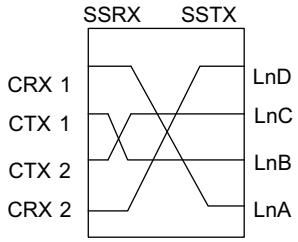	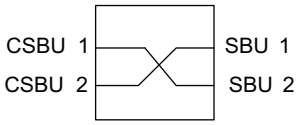

USB High Speed Function

High speed switch function done by the device (U19) which receives inputs from the standard-USB 3.0 type A connector J6 and the Billboard device (U13) data using USB2.0 protocol and switches either of one to the Type-C connector (CN2). The switching behavior of U13 is controlled by the iCE device using the HS_SAI and HS_EN signals. Figure 7 shows the High Speed Switch.

Figure 7. High Speed Switch

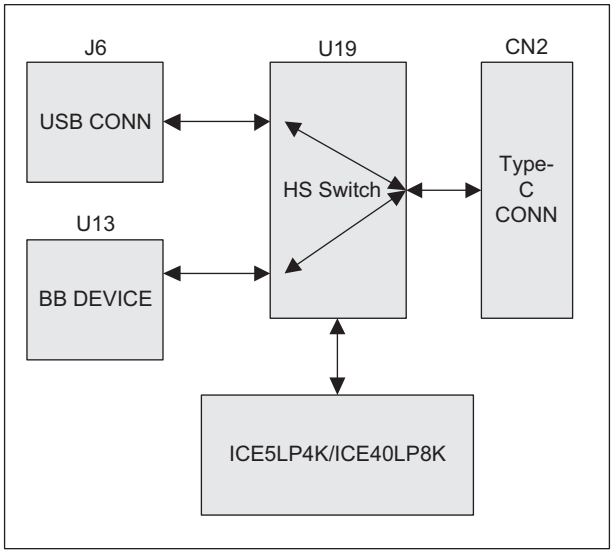

Table 11 provides the detailed definition of the MUX selection.

Table 11. MUX Selection

ENA/B	SAI	OUTA0
0	X	Hi-Z
1	1	INA
1	0	INB

Billboard Interface

Billboard interface is the feature supported by USB Type-C protocol and which functioned by U13 and based on the iCE control for the HS switch it will be terminated to the Type-C connector (CN2). Table 12 provides the detailed definition of the Billboard Interface I/O map and associated net names.

Table 12. Billboard Interface

ICE40LP8K(U22)		SNF225111BX(U13)	J5	PI3DBS3224(U19)	Schematic Net
I/O Ball	**Bank**	**Pin Name**	**Pin Number**	**Pin Number**	
C4	0	P5.0/SCK	—	—	BB_SCK
H5	2	P5.0/SDO	—	—	BB_SDO
G5	2	P5.1/SDI	—	—	BB_SDI
C5	0	P0.1/INT1	—	—	BB_INT
—	—	P1.0	2	—	BB_PGM
—	—	P1.1	3	—	BB_ALSB/PDB
—	—	P2.0	5	—	BB_CLK
—	—	P2.1	4	—	BB_OE
—	—	DN	—	4	BB_DN
—	—	DP	—	3	BB_DP

Data Logging Interface

Data logging interface can use a terminal screen such as HyperTerminal or Putty to display PD transactions of the USB Type-C Demo Kit V2. Figure 8 shows the data flow and the block diagram of the data logging interface.

Figure 8. Data Logging Interface

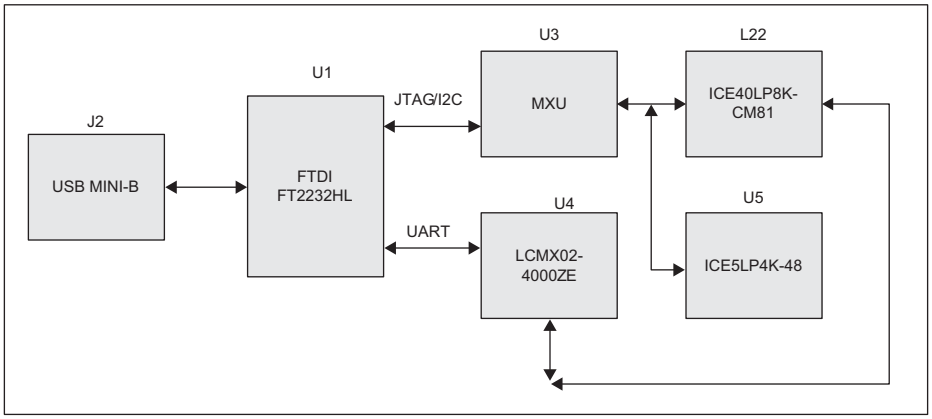

Ordering Information

Description	Ordering Part Number	China RoHS Environment-Friendly Use Period
iCE40LP8K USB Type-C Demo Kit V2	iCE40LP8K-USBC-EVN	
iCE40 Ultra USB Type-C Demo Kit V2	iCE5LP4K-USBC-EVN	

Technical Support Assistance

Submit a technical support case via www.latticesemi.com/techsupport.

Revision History

Date	Version	Change Summary
December 2015	1.2	Updated the SW3 switch settings according to the USB Type-C Demo Kit V2-Rev B.
		Updated the schematic diagrams according to the USB Type-C Demo Kit V2-Rev B.
October 2015	1.1	Updated Introduction section. Added note on modifying board population.
		Updated USB Super-Speed Switch/Alternate Mode Function section. Removed note on modifying board population.
June 2015	1.0	Initial release.

© 2015 Lattice Semiconductor Corp. All Lattice trademarks, registered trademarks, patents, and disclaimers are as listed at **www.latticesemi.com/legal**. All other brand or product names are trademarks or registered trademarks of their respective holders. The specifications and information herein are subject to change without notice.

Appendix A. Schematic Diagrams (USB Type--C Demo Kit V2-REV B)

Figure 9. Block Diagram

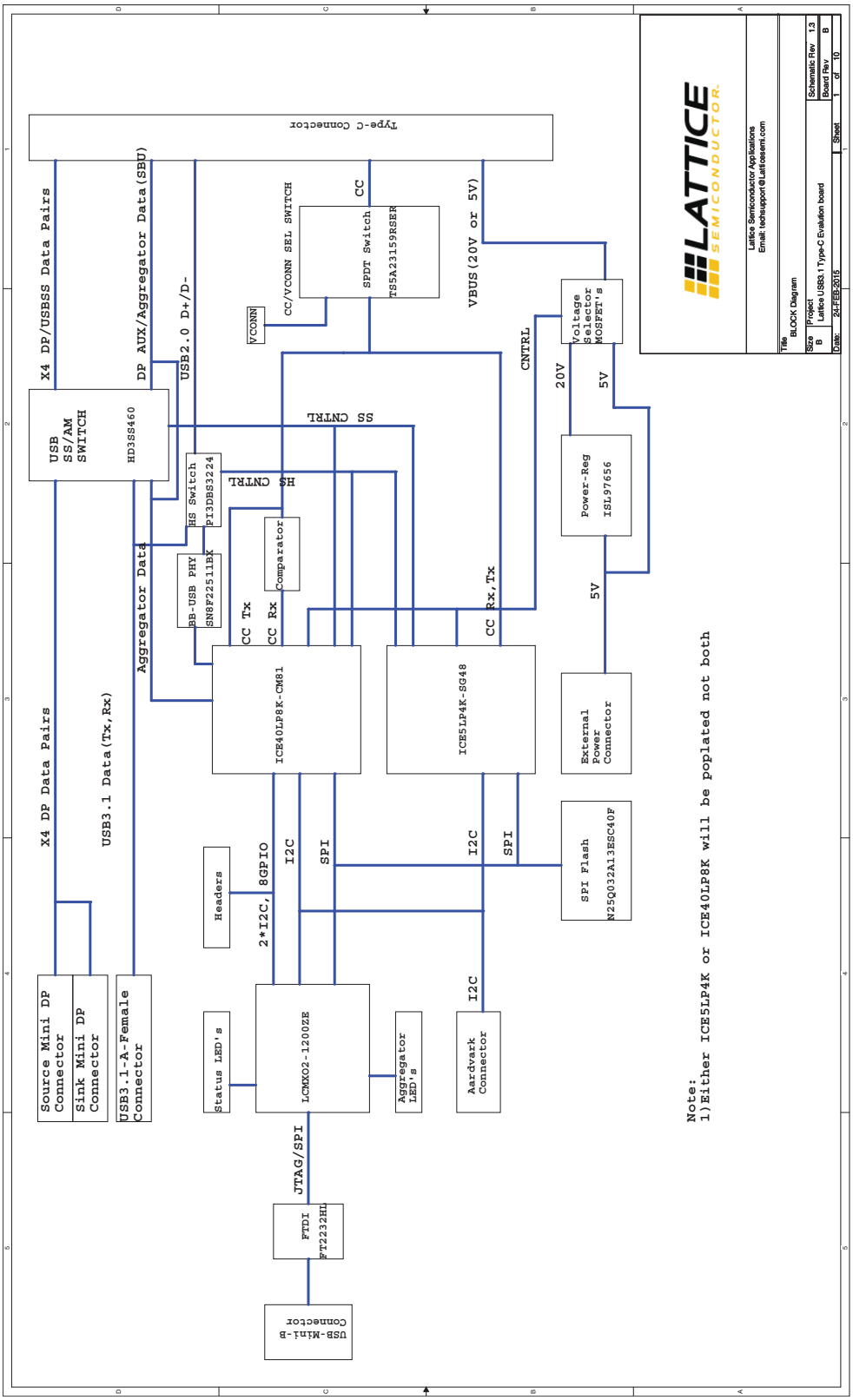

Figure 10. FTDI I/F

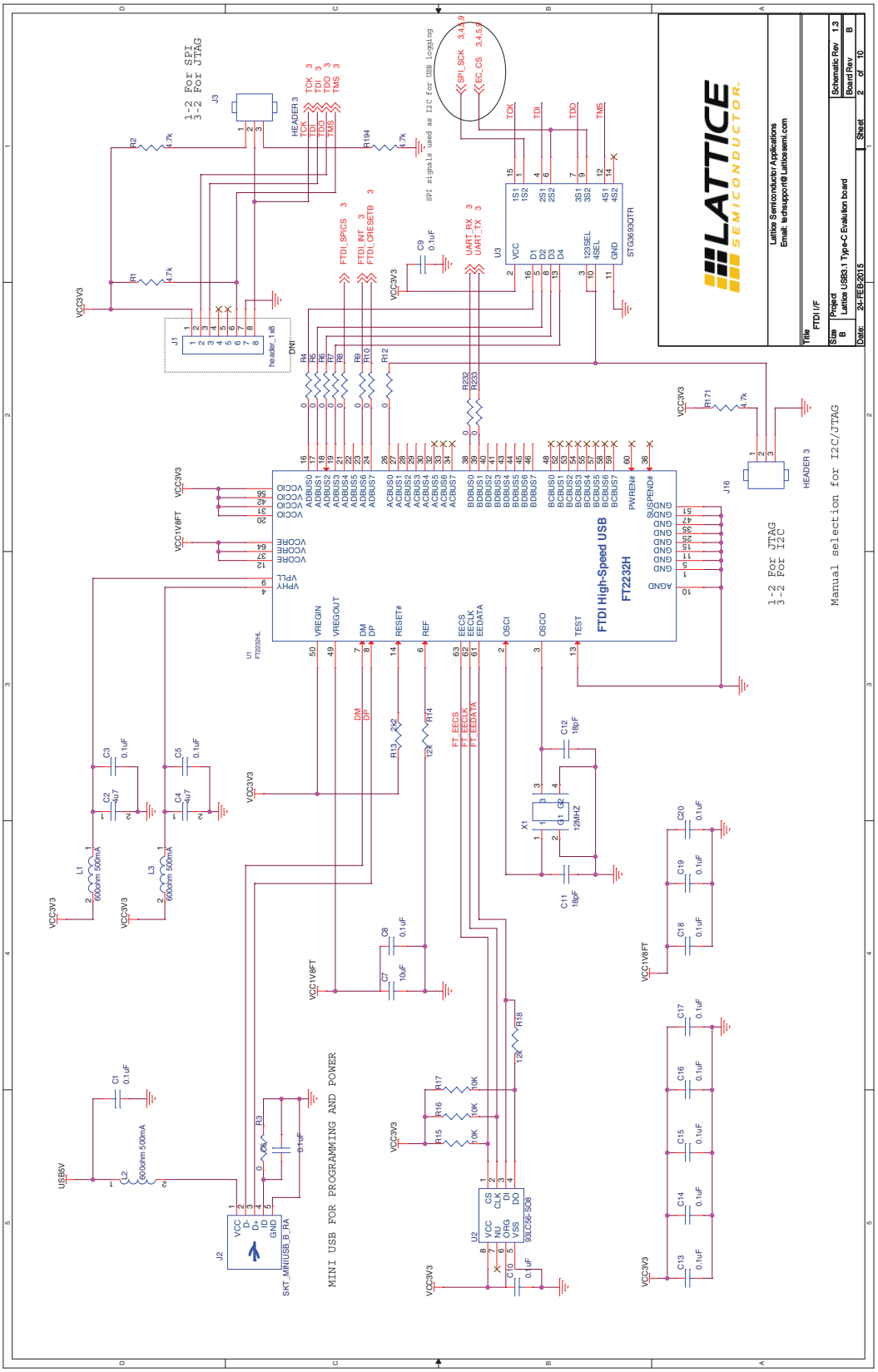

Figure 11. MachXO2 I/F

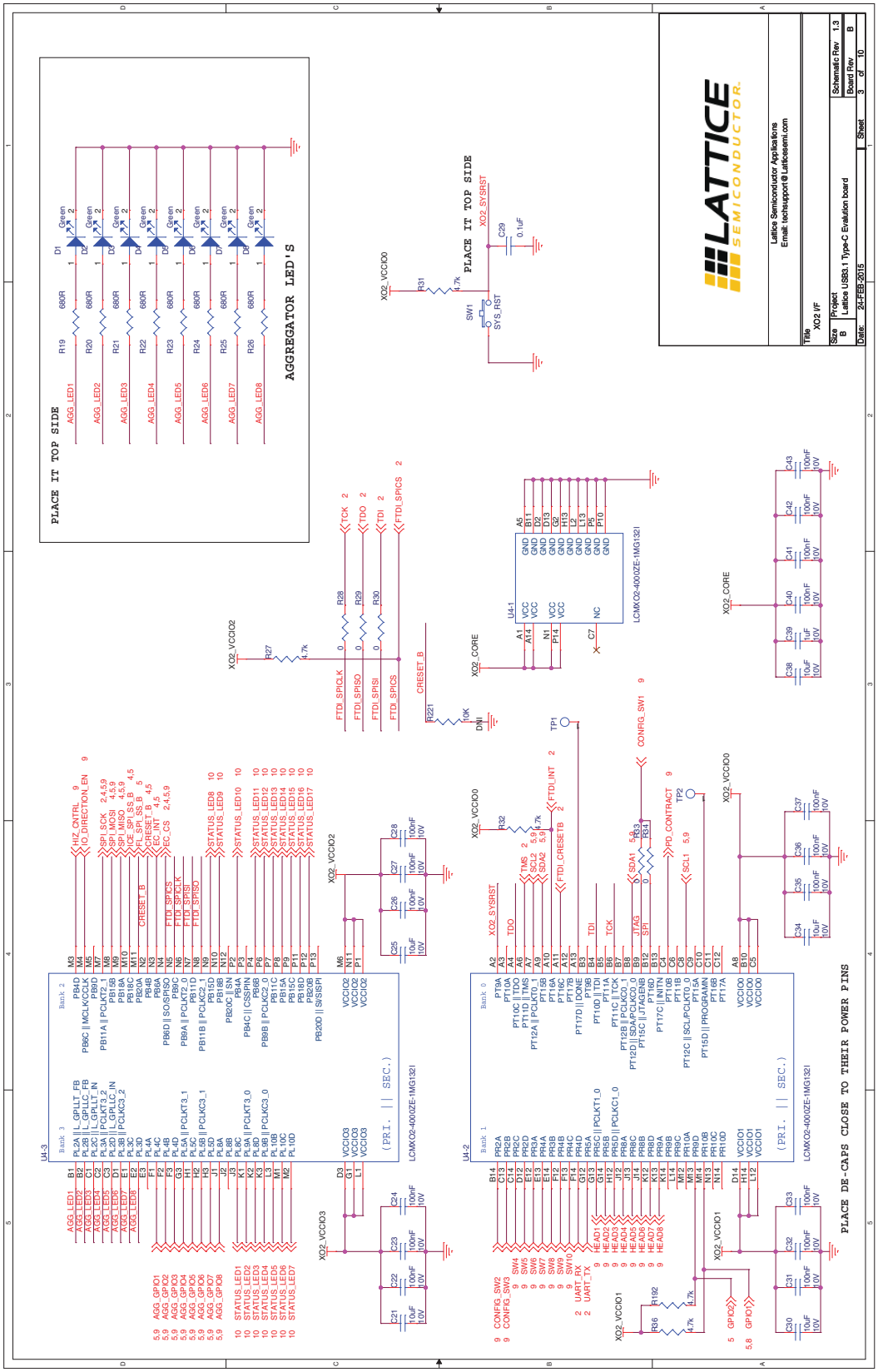

Figure 12. iCE5LP4K I/F

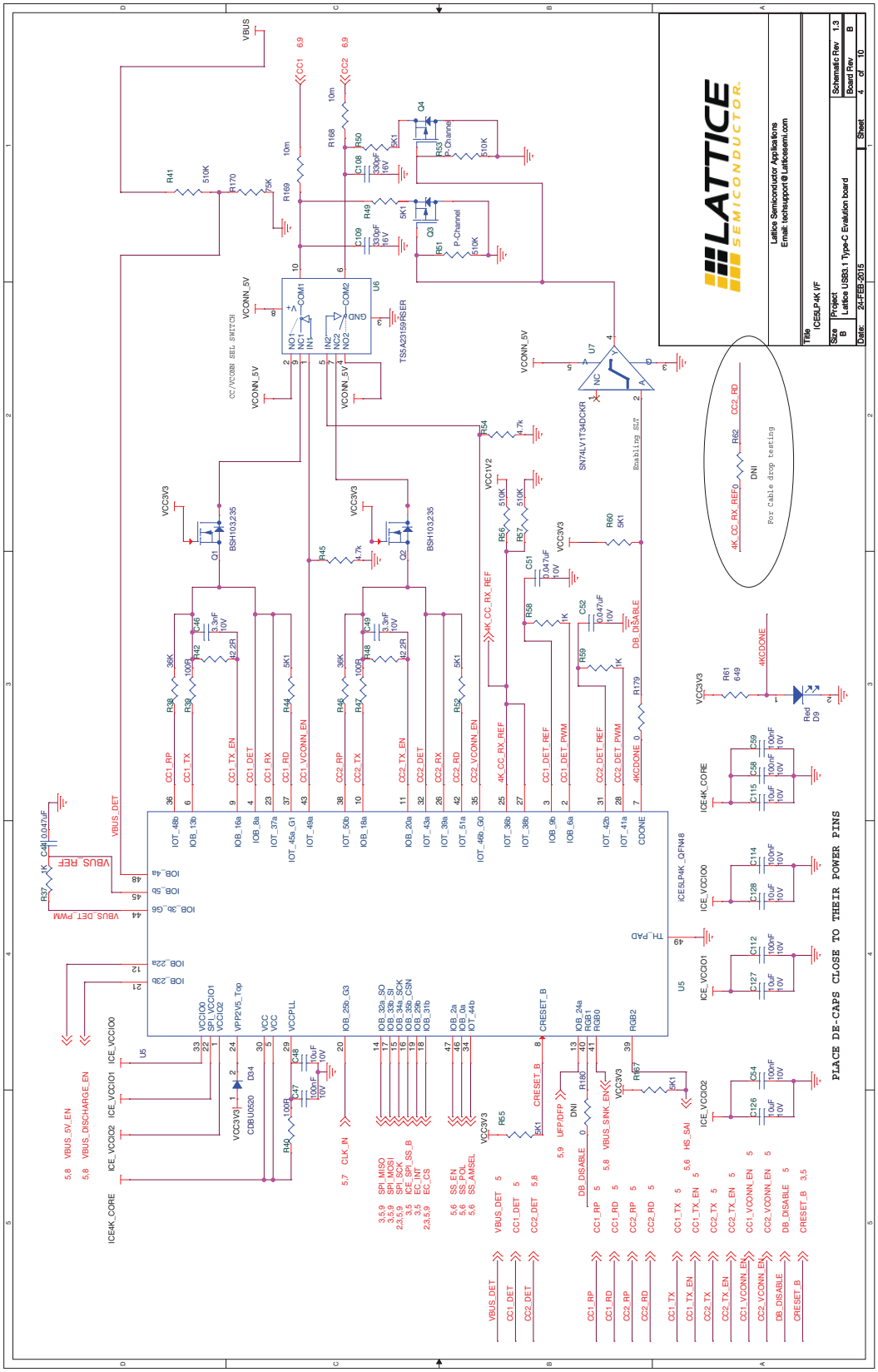

Figure 13. iCE5LP8K I/F

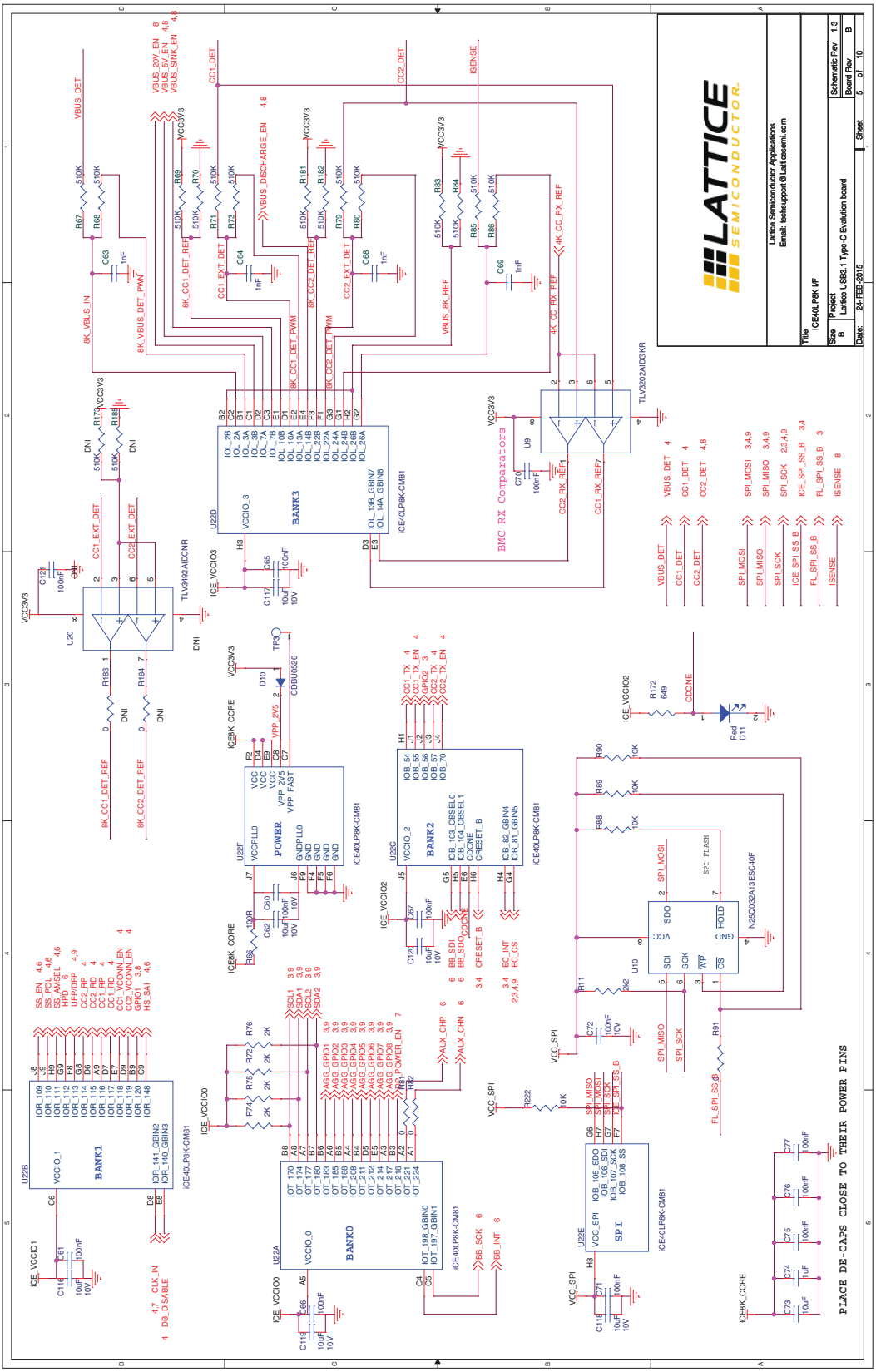

Figure 14. SS/DP/BB I/F

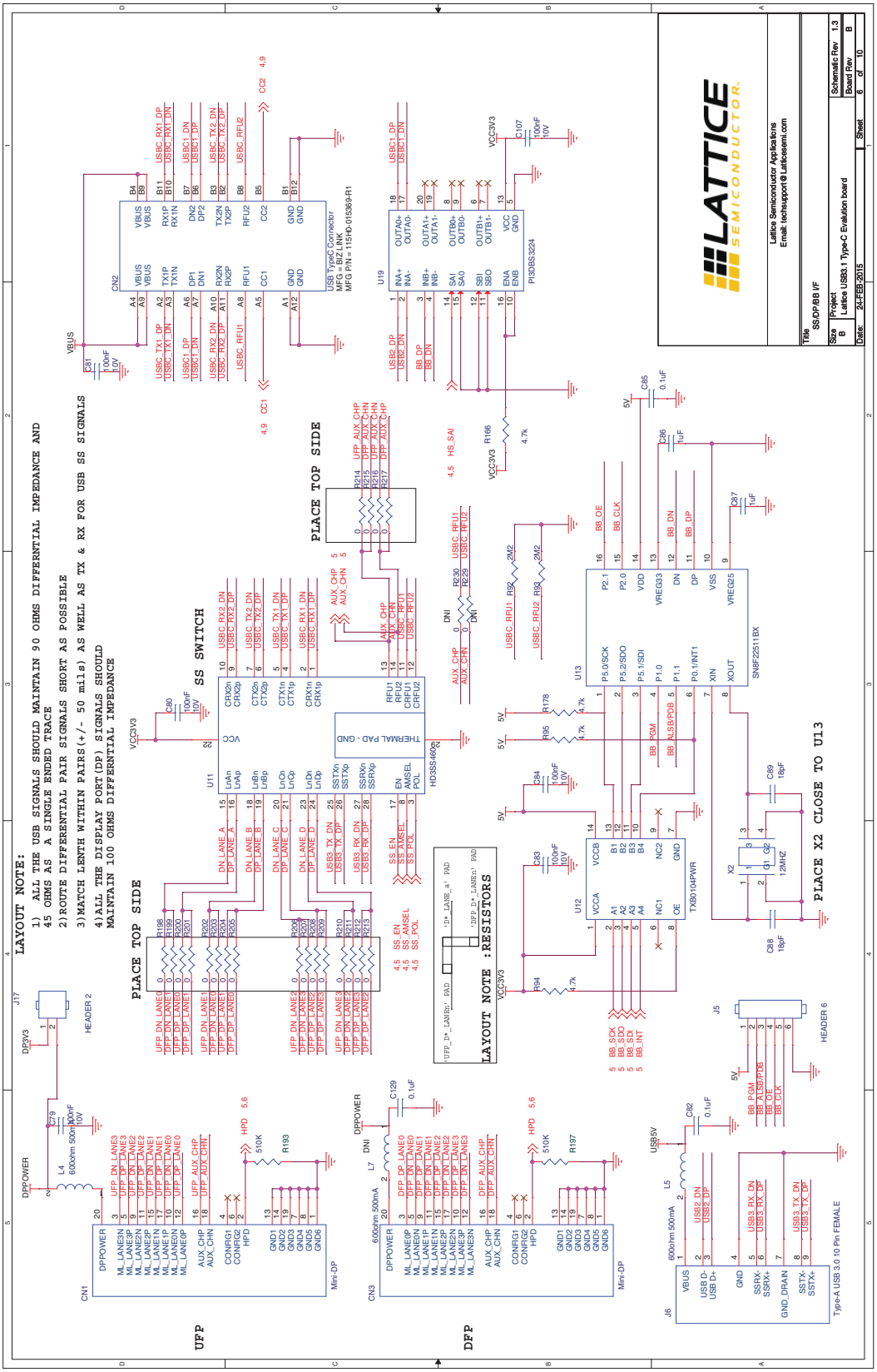

Figure 15. Power Regulator I/F

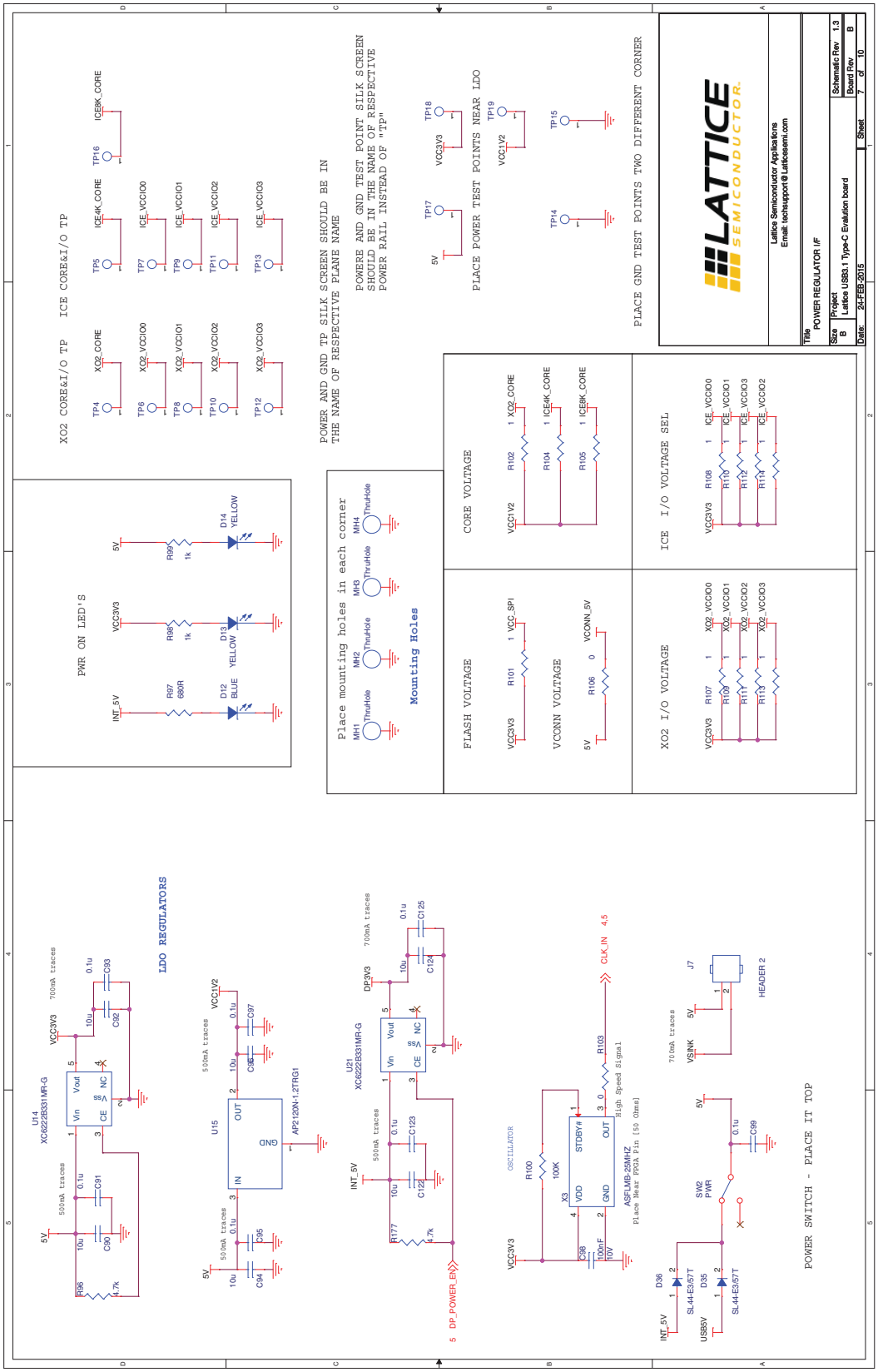

Figure 16. Power Source/Sink I/F

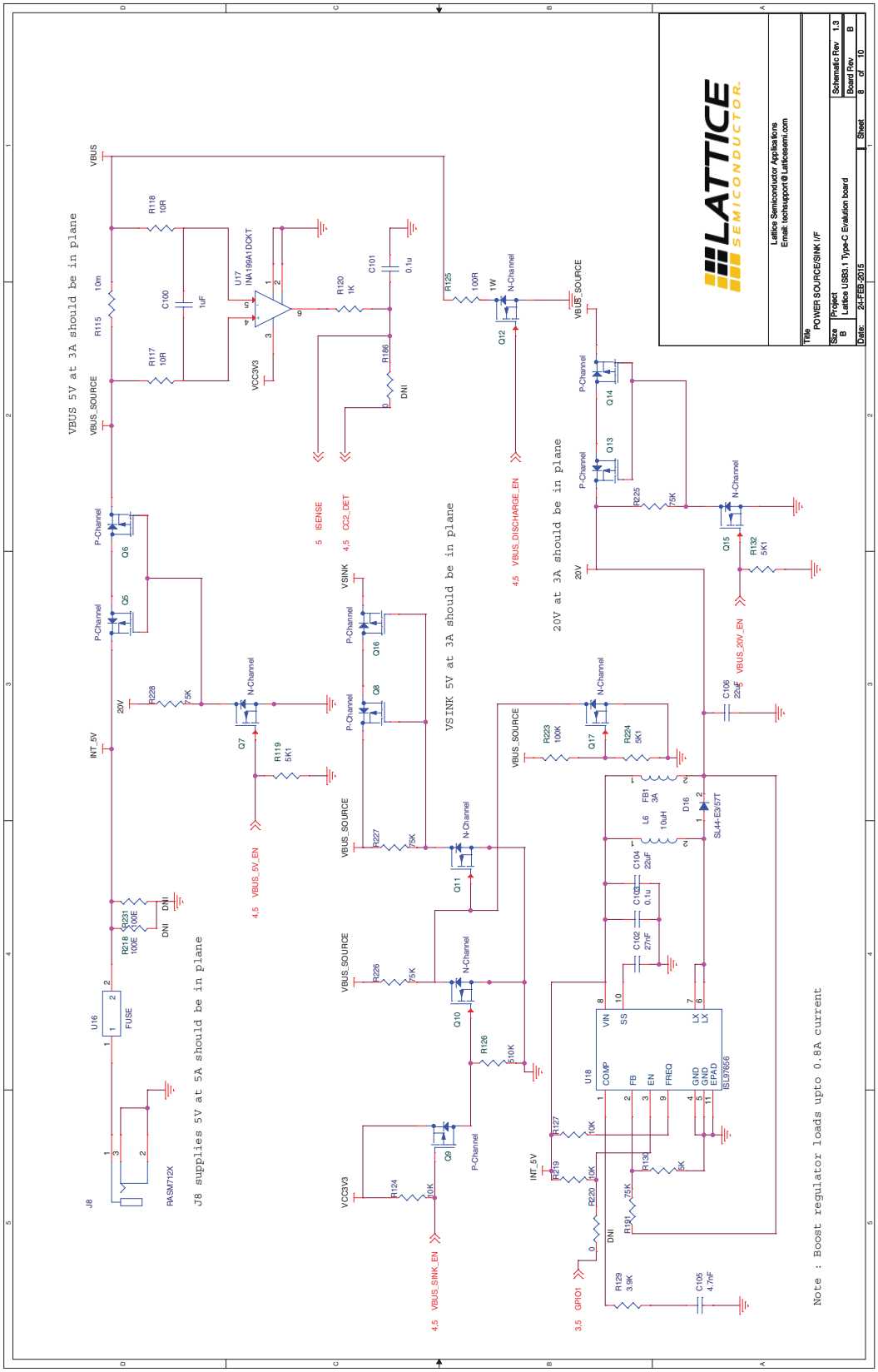

Figure 17. Headers and Switch I/F

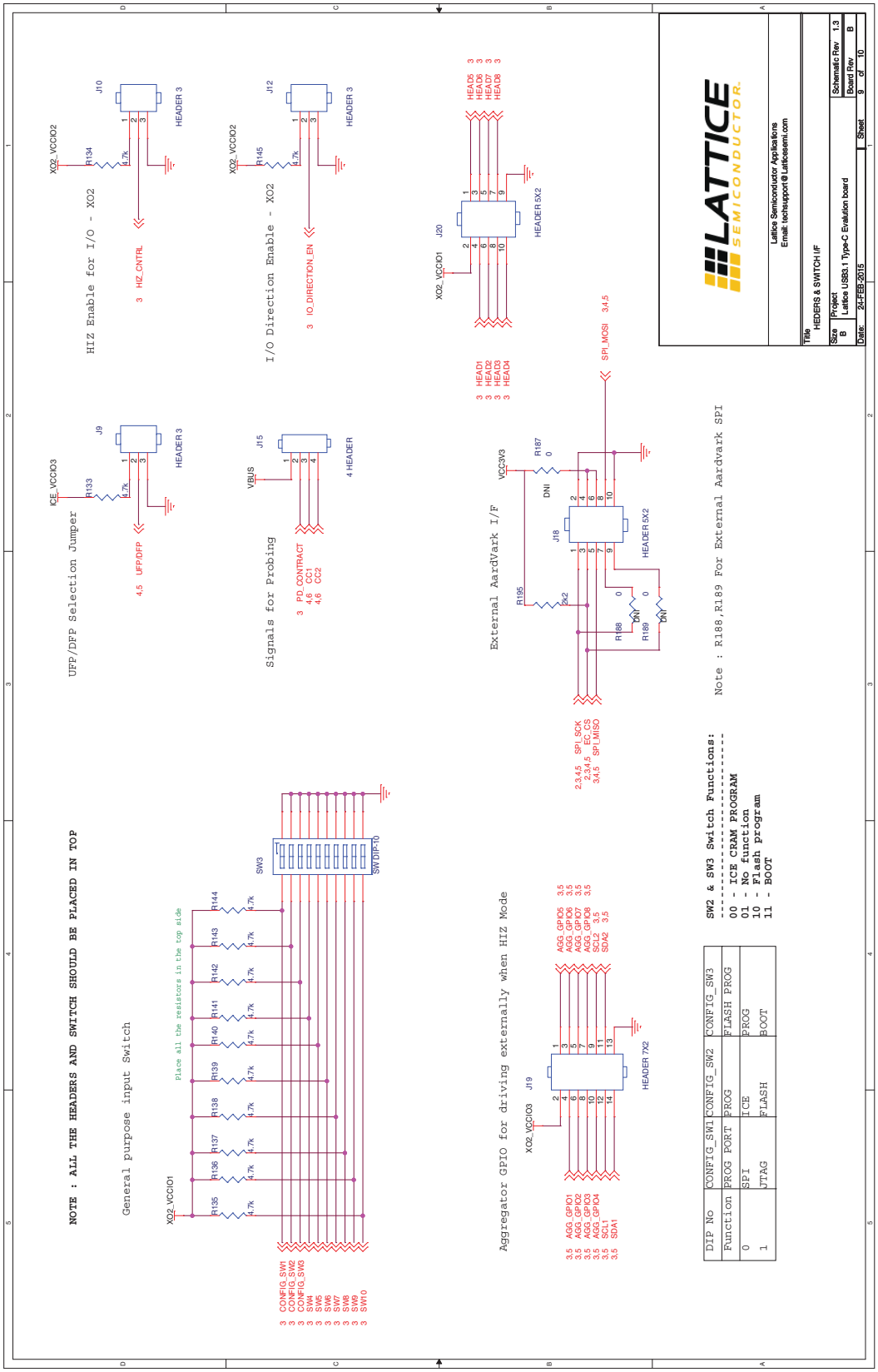

Figure 18. Status LED I/F

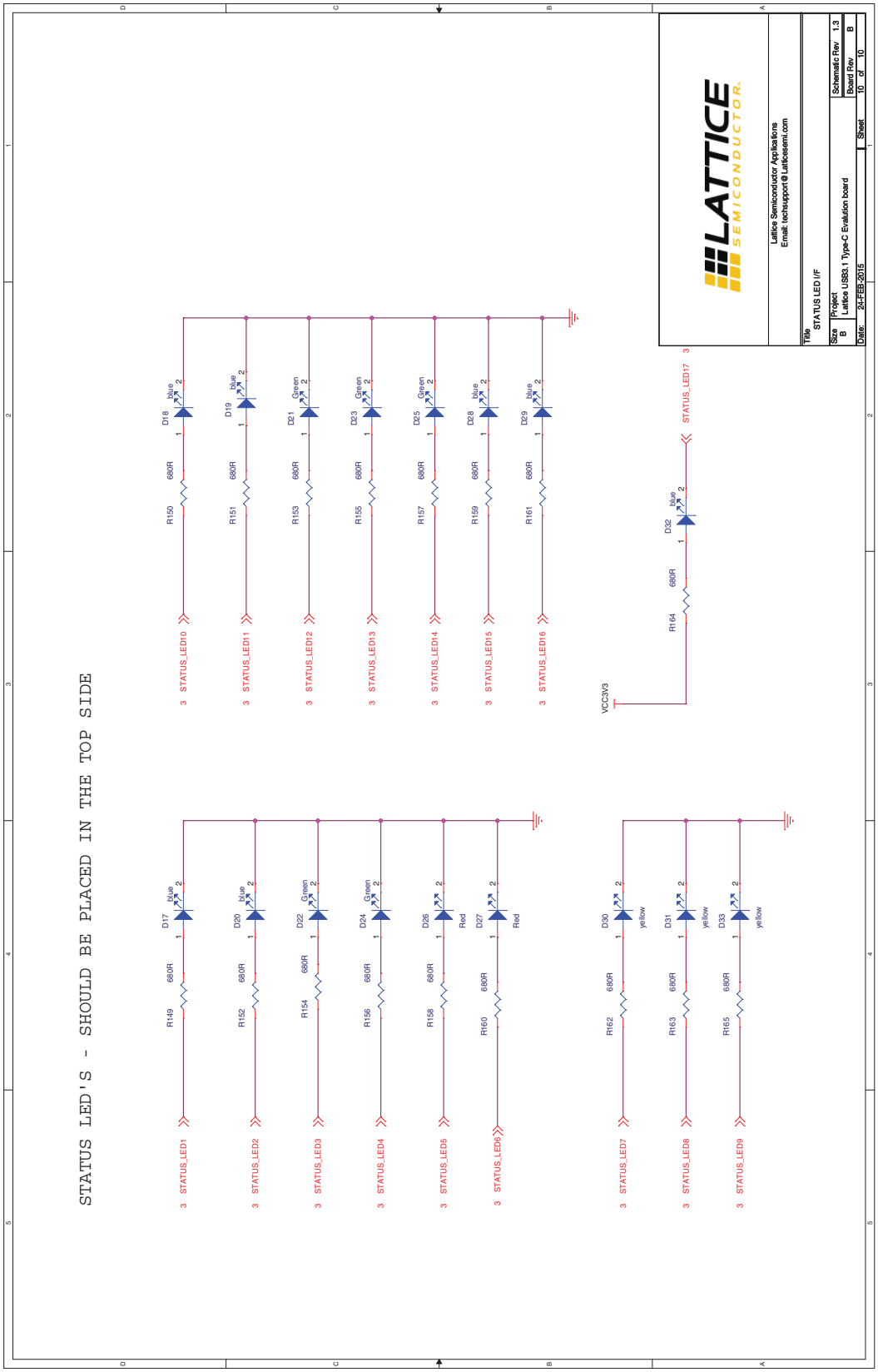

Appendix B. Bill of Materials

Item	Reference	Quantity	Part	PCB Footprint	Comments		Part Number	Manufacturer	Description
					4k BOM	8kdfp BOM			
1	CN1	1	Mini-DP	2129320-3	DNI	—	2129320-3	TE Connectivity	Mini Display Port Reverse Offset
2	CN2	1	USB Type-C Connector	usb_type_c	Customer Supplied	—	115H0-015369-R1	BIZ LINK	CONN, USB Type-C, 24P, R/A Receptacle
3	CN3	1	Mini-DP	2129320-3	DNI	—	2129320-3	TE Connectivity	Mini Display Port Reverse Offset
4	C1,C3,C5,C6,C8,C9,C10,C13,C14,C15,C16,C17,C18,C19,C20,C29,C82	17	0.1 uF	C0402	—	—	C0402C104K4RACTU	KEMET Corporation	CAP Ceramic 0.1 uF 16 V X7R 0402
5	C2,C4	2	4u7	C0603	—	—	ECJ-1VB0J475K	Panasonic	CAP Ceramic 4.7 uF 6.3V 10% X5R 0603
6	C7	1	10 uF	C0603	—	—	LMK107BJ106MALTD	Taiyo Yuden	CAP CECAP CER 10 uF 10 V X5R 20% 0603
7	C11,C12,C88,C89	4	18 pF	C0402	—	—	C0402C180K3GACTU	KEMET Corporation	CAP Ceramic 18 pF 25 V C0G 0402
8	C21,C25,C30,C34,C38	5	10 uF	C0805	—	—	GRM21BR61A106KE19L	Murata	CAP Ceramic 10 uF 10 V 10% X5R 0805
9	C22,C23,C24,C26,C27,C28,C31,C32,C33,C35,C36,C37,C40,C41,C42,C43,C72,C80,C81,C98,C107	21	100 nF	C0402	—	—	GRM155R61A104KA01D	Murata	CAP Ceramic 100 nF 10 V 10% X5R 0402
10	C39	1	1 uF	C0402	—	—	GRM155R61A105KE15D	Murata	CAP Ceramic 1 uF 10 V 10% X5R 0402
11	C44,C51,C52	3	0.047 uF	C0402	—	DNI	GRM155R61A473KA01D	Murata	CAP Ceramic 0.047 uF 10 V 10% X5R 0402
12	C46,C49	2	3.3 nF	C0402	—	—	04025C332JAT2A	AVX Corporation	CAP Ceramic 3300 pF 50 V 5% X7R 0402
13	C47,C54,C58,C59,C112,C114	6	100 nF	C0402	—	DNI	GRM155R61A104KA01D	Murata	CAP Ceramic 100 nF 10 V 10% X5R 0402
14	C48,C115,C126,C127,C128	5	10 uF	C0805	—	DNI	GRM21BR61A106KE19L	Murata	CAP Ceramic 10 uF 10 V 10% X5R 0805
15	C60,C61,C65,C66,C67,C70,C71,C75,C76,C77,C83,C84	12	100 nF	C0402	DNI	—	GRM155R61A104KA01D	Murata	CAP Ceramic 100 nF 10 V 10% X5R 0402
16	C62,C73,C116,C117,C118,C119,C120	7	10 uF	C0805	DNI	—	GRM21BR61A106KE19L	Murata	CAP Ceramic 10 uF 10 V 10% X5R 0805
17	C63,C64,C68,C69	4	1 nF	C0402	DNI	—	GRM155R61A102KA01D	Murata	CAP Ceramic 1000 pF 10 V 10% X5R 0402
18	C74,C86,C87	3	1 uF	C0402	DNI	—	GRM155R61A105KE15D	Murata	CAP Ceramic 1 uF 10 V 10% X5R 0402
19	C79	1	100 nF	C0402	DNI	—	GRM155R61A104KA01D	Murata	CAP Ceramic 100 nF 10 V 10% X5R 0402
20	C85	1	0.1 uF	C0402	DNI	—	C0402C104K4RACTU	KEMET Corporation	CAP Ceramic 0.1 uF 16 V X7R 0402
21	C90,C92,C94,C96	4	10 u	C0603	—	—	CL10X106MP8NRNC	Samsung	CAP Ceramic 10 uF 10 V 20% X6S 0603
22	C91,C93,C95,C97,C99,C101	6	0.1 u	C0402	—	—	CL05A104MP5NNNC	Samsung	Cap Ceramic 0.1 uF 10 V X5R 20% SMD 0402 85C Paper T/R
23	C100	1	1 uF	C0805	—	—	GRM21BR71H105KA12L.	Murata Manufacturing Co Ltd	Multilayer Ceramic Capacitors MLCC - SMD/SMT 1.0 uF 50 V 10% 0805
24	C102	1	27 nF	C0402	DNI	—	C0402C273K3RAC7867	KEMET Corporation	Multilayer Ceramic Capacitors MLCC - SMD/SMT 25 V 0.027 uF 10% X7R
25	C103	1	0.1 u	C0805	DNI	—	VJ0805Y104KXATW1BC	Vishay Intertechnologies	Multilayer Ceramic Capacitors MLCC - SMD/SMT 0805 0.1 uF 50 V X7R 10%
26	C104,C106	2	22 uF	7343	DNI	—	T491X226K035AT	KEMET Corporation	Tantalum Capacitors - Solid SMD 35 V 22 uF 10% "X"
27	C105	1	4.7 nF	C0402	DNI	—	04025C472KAT2A	AVX Corporation	Multilayer Ceramic Capacitors MLCC - SMD/SMT 0402 4700 pF 50 V X7R 10%
28	C108,C109	2	330 pF	C0402	DNI	DNI	C0402C331K4RACTU	KEMET Corporation	CAP Ceramic 330 pF 16 V 10% X7R 0402
29	C121	1	100 nF	C0402	DNI	DNI	GRM155R61A104KA01D	Murata	CAP Ceramic 100 nF 10 V 10% X5R 0402
30	C122,C124	2	10 u	C0603	DNI	—	CL10X106MP8NRNC	Samsung	CAP Ceramic 10 uF 10 V 20% X6S 0603
31	C123,C125	2	0.1 u	C0402	DNI	—	CL05A104MP5NNNC	Samsung	Cap Ceramic 0.1 uF 10 V X5R 20% SMD 0402 85C Paper T/R
32	C129	1	0.1 uF	C0402	DNI	DNI	C0402C104K4RACTU	KEMET Corporation	CAP Ceramic 0.1 uF 16 V X7R 0402

Item	Reference	Quantity	Part	PCB Footprint	Comments		Part Number	Manufacturer	Description
33	D1,D2,D3,D4,D5, D6,D7,D8	8	Green	led_0603	DNI	—	LTST-C194KGKT	Lite ON INC	Standard LEDs - SMD Green 571nm 12mcd 20mA
34	D9	1	Red	led_0603	—	DNI	LTST-C193KRKT-5A	Lite ON INC	Standard LEDs - SMD Red 631nm 14mcd 5mA
35	D10	1	CDBU0520	D0603	DNI	—	CDBU0520	Comchip	DIODE SCHOTTKY 20 V 500 mA 0603
36	D11	1	Red	led_0603	DNI	—	LTST-C193KRKT-5A	Lite ON INC	Standard LEDs - SMD Red 631 nm 14 mcd 5m A
37	D12	1	Blue	led0603	—	—	LB Q39G-L2N2-35-1	Osram Opto	Standard LEDs - SMD Blue, 470nm 45mcd, 5mA
38	D13,D14	2	Yellow	led0603	—	—	LY Q976-P1S2-36	Osram Opto	LED Uni-Color Yellow 591nm 2-Pin Chip LED T/R
39	D15,D35,D36	3	SL44-E3/57T	SL44E357T	—	—	SL44-E3/57T	VISHAY SEMI-CONDUCTOR	Schottky Diodes & Rectifiers 4.0 Amp 40 V
40	D16	1	SL44-E3/57T	SL44E357T	DNI	—	SL44-E3/57T	VISHAY SEMI-CONDUCTOR	Schottky Diodes & Rectifiers 4.0 Amp 40 V
41	D17,D18,D19, D20,D28,D29,D3 2	7	Blue	led_0603	—	—	LTST-C193TBKT-5A	Lite ON INC	Standard LEDs - SMD Blue 470 nm 28 mcd 5 mA
42	D21,D22,D23, D24,D25	5	Green	led_0603	—	—	LTST-C194KGKT	Lite ON INC	Standard LEDs - SMD Green 571 nm 12 mcd 20 mA
43	D26,D27	2	Red	led_0603	—	—	LTST-C193KRKT-5A	Lite ON INC	Standard LEDs - SMD Red 631nm 14mcd 5mA
44	D30,D31,D33	3	Yellow	led_0603	—	—	LTST-C193KSKT-5A	Lite ON INC	Standard LEDs - SMD Yellow 589nm 22mcd 5mA
45	D34	1	CDBU0520	D0603	—	DNI	CDBU0520	Comchip	DIODE SCHOTTKY 20 V 500 mA 0603
46	J1	1	header_1x8	hdr_amp_87220_8_1x8_100	DNI	DNI	22-28-4081	Molex	General 100 mils Header 1x8
47	J2	1	SKT_MINIUSB_B_RA	skt_miniusb_b_ra	—	—	5075BMR-05-SM-CR	Neltron	CONN MINI USB RCPT RA TYPE B SMD
48	J3,J9,J12,J16	4	Header 3	header1X3	—	—	-	-	General 100 mils Header 1x3
49	J5	1	Header 6	HEADER1x6	DNI	—	-	-	General 100 mils Header
50	J6	1	Type-A USB 3.0 10 Pin FEMALE	micro_usb3_0A	—	—	GSB311131HR	Amphenol	USB Connectors USB 3.0 R/A REC TH TYPE A BLUE 30 GOLD
51	J7	1	Header 2	HEADER2	—	—	-	-	General 100 mils Header 1x2
52	J8	1	RASM712X	RASM712X	—	—	RASM712X	Switchcraft	DC Power Connectors RA PWR JK SM.100 DIA
53	J10	1	Header 3	header1X3	DNI	—	-	-	General 100 mils Header 1x3
54	J15	1	4 Header	HEADER1X4	—	—	-	-	General 100 mils header
55	J17	1	Header 2	HEADER2	DNI	—	-	-	General 100 mils Header 1x2
56	J18	1	Header 5X2	header2X5	—	—	-	-	General 100 Mils 2*5 header
57	J19	1	Header 7X2	Header7x2	—	—	-	-	General 100 mils header
58	J20	1	Header 5X2	header5X2	—	—	-	-	General 100 Mils 2*5 header
59	L1,L2,L3,L5	4	600 Ohm 500 mA	FB0603	—	—	BLM18AG601SN1D	Murata	Ferrite Bead 600ohm@100MHz 500mA 0603
60	L4	1	600 Ohm 500 mA	FB0603	DNI	—	BLM18AG601SN1D	Murata	Ferrite Bead 600ohm@100MHz 500mA 0603
61	L6	1	10 uH	1240	DNI	—	SRR1240-100M.	Bourns	Fixed Inductors 10 UH 4A
62	L7	1	600 Ohm 500 mA	FB0603	DNI	—	BLM18AG601SN1D	Murata	Ferrite Bead 600ohm@100MHz 500mA 0603
63	MH1,MH2,MH3, MH4	4	ThruHole	MTG125	—	—	—	—	—
64	Q1,Q2	2	BSH103,235	BSH103_235	—	—	BSH103,235	NXP Semicon-ductors	MOSFET N-CH 30 V 0.85 A SOT23
65	Q3,Q4,Q9	3	P-Channel	NTA4151PT1G_SOT416	—	—	NTA4151PT1G	ON Semiconduc-tor	MOSFET P-CH 20 V 760 mA SOT-416
66	Q5,Q6	2	P-Channel	IRLML5203TRPBF	—	DNI	IRLML5203TRPBF	International Rectifier	MOSFET MOSFT P-Ch -30 V -3A 98 mOhm
67	Q8,Q16	2	P-Channel	IRLML5203TRPBF	—	—	IRLML5203TRPBF	International Rectifier	MOSFET MOSFT P-Ch -30 V -3A 98 mOhm
68	Q7,Q10,Q11, Q12,Q17	5	N-Channel	BSH103_235	—	—	BSH103,235	NXP Semicon-ductors	MOSFET N-CH 30 V 0.85 A SOT23
69	Q13,Q14	2	P-Channel	IRLML5203TRPBF	DNI	—	IRLML5203TRPBF	International Rectifier	MOSFET MOSFT P-Ch -30 V -3 A 98 mOhm
70	Q15	1	N-Channel	BSH103_235	DNI	—	BSH103,235	NXP Semicon-ductors	MOSFET N-CH 30 V 0.85 A SOT23

Item	Reference	Quantity	Part	PCB Footprint	Comments		Part Number	Manufacturer	Description
71	R1,R2,R27,R31, R32,R96,R133, R134,R135, R136,R137,R138 ,R139,R140, R141,R142, R143,R144, R145,R166, R171,R194	22	4.7k	R0603	—	—	CRCW06034K70FKEA	VISHAY	Thick Film Resistors - SMD 1/10watt 4.7 kOhm 1%
72	R3,R4,R5,R6,R7, R8,R9,R10,R28, R29,R30,R33, R34,R91,R103, R106,R180, R187,R188, R189,R232, R233	22	0	R0402	—	—	RC0402JR-070RL	Yageo	RES 1/10W 0.0 Ohm 5% 0402
73	R11,R13,R195	3	2k2	R0603	—	—	CRCW06032K20FKEA	Vishay	RES Thick Film 0603 2.2 kOhm 1% 1/10W ±100ppm/C Molded SMD Paper T/R
74	R14,R18	2	12k	R0603	—	—	RC0603FR-0712KL	Yageo	SMT Thick Film Chip Resistor 0603 0.1 W 12 kOhms 1% ?100 ppm
75	R15,R16,R17	3	10K	R0603	—	—	RMCF0603JT10K0	Stackpole Electronics Inc	RES Thick Film 0603 10 kOhm 5% 1/10W ±100ppm/C Molded SMD SMD Paper T/R
76	R19,R20,R21, R22,R23,R24, R25,R26	8	680R	R0402	DNI	—	RMCF0402JT680R	Stackpole Electronics Inc	RES 680 Ohm 1/16W 5% 0402
77	R36,R94,R95, R178,R192	5	4.7k	R0603	DNI	—	CRCW06034K70FKEA	VISHAY	Thick Film Resistors - SMD 1/10watt 4.7Kohms 1%
78	R37,R58,R59	3	1K	R0402	—	DNI	RMCF0402JT1K00	Stackpole Electronics Inc	RES 1 kOhm 1/16 W 5% 0402
79	R38,R46	2	36K	R0402	—	—	RMCF0402JT36K0	Stackpole Electronics Inc	RES 36 kOhm 1/16 W 5% 0402
80	R39,R47	2	100R	R0603	—	—	ERJ-3EKF1000V	Panasonic	RES SMD 100 kOhm 1% 1/10 W 0603
81	R40	1	100R	R0402	—	DNI	RMCF0402JT100R	Stackpole Electronics Inc	RES 100 Ohm 1/16 W 5% 0402
82	R41,R126	2	510K	R0402	—	—	RMCF0402JT510K	Stackpole Electronics Inc	RES 510 kOhm 1/16W 5% 0402
83	R45,R54	2	4.7k	R0402	—	—	ERJ-2RKF4701X	Panasonic	RES SMD 4.7 kOhm 1% 1/10W 0402
84	R42,R48	2	42.2R	R0603	—	—	ERJ-3EKF42R2V	Panasonic	RES SMD 42.2 kOkm 1% 1/10W 0603
85	R44,R49,R50, R52,R60,R119, R224	7	5K1	R0402	—	—	RMCF0402JT5K10	Stackpole Electronics Inc	RES 5.1 kOhm 1/16W 5% 0402
86	R51,R53	2	510K	R0603	—	—	ERJ-3GEYJ514V	Panasonic	RES SMD 510 kOhm 5% 1/10W 0603
87	R55,R167	2	5K1	R0402	—	DNI	RMCF0402JT5K10	Stackpole Electronics Inc	RES 5.1 kOhm 1/16W 5% 0402
88	R56,R57	2	510K	R0402	—	Refer to Rework instructions	RMCF0402JT510K	Stackpole Electronics Inc	RES 510 kOhm 1/16W 5% 0402
89	R61	1	649	R0603	—	DNI	RC0603FR-07649RL	Yageo	RES SMD 649 Ohm 1% 1/10W 0603
90	R12,R62,R183, R184,R186, R229,R230	6	0	R0402	DNI	DNI	RC0402JR-070RL	Yageo	RES 1/10W 0.0 Ohm 5% 0402
91	R66	1	100R	R0402	DNI	—	RMCF0402JT100R	Stackpole Electronics Inc	RES 100 Ohm 1/16W 5% 0402
92	R67,R68,R69,R70,R71,R73,R79,R80,R83,R84,R85, R86,R181,R182	14	510K	R0603	DNI	—	ERJ-3GEYJ514V	Panasonic	RES SMD 510 kOhm 5% 1/10W 0603
93	R72,R74,R75, R76	4	2K	R0603	DNI	—	RMCF0603JT2K00	Stackpole Electronics Inc	RES SMD 2 kOhm 5% 1/10W 0603
94	R81,R82	2	0	R0402	DNI	—	RC0402JR-070RL	Yageo	RES 1/10W 0.0 Ohm 5% 0402
95	R220	1	0	R0402	DNI	—	RC0402JR-070RL	Yageo	RES 1/10W 0.0 Ohm 5% 0402
96	R88,R89,R90, R124,R127,R222	6	10K	R0402	—	—	RMCF0402JT10K0	Stackpole Electronics Inc	RES 10 kOhm 1/16W 5% 0402
97	R92,R93	2	2M2	R0402	—	—	RK73H1ETTP2204F	KOA Speer	Thick Film Resistors - SMD 2.2 mOhm 1%

Item	Reference	Quantity	Part	PCB Footprint	Comments		Part Number	Manufacturer	Description
98	R97,R149,R150, R151,R152, R153,R154, R155,R156, R157,R158, R159,R160, R161,R162, R163,R164, R165	18	680R	R0402	—	—	RMCF0402JT680R	Stackpole Electronics Inc	RES 680 Ohm 1/16W 5% 0402
99	R98,R99	2	1k	R0603	—	—	RC1608J102CS	Samsung	RES Thick Film 0603 1 kOhm 5% 1/10 W }100ppm/? Molded SMD T/R
100	R100	1	100K	R0402	—	—	RMCF0402JT100K	Stackpole Electronics Inc	RES 100 kOhm 1/16W 5% 0402
101	R101,R102, R107,R108, R109,R110, R111,R113, R114	9	1	R0603	—	—	CRCW06031R00JNEAHP	Vishay	RES 1.0 Ohm .25W 5% 0603 SMD
102	R104	1	1	R0603	—	—	CRCW06031R00JNEAHP	Vishay	RES 1.0 Ohm .25W 5% 0603 SMD
103	R105,R112	2	1	R0603	DNI	—	CRCW06031R00JNEAHP	Vishay	RES 1.0 Ohm .25W 5% 0603 SMD
104	R115,R168,R169	3	10m	R0402	—	—	CSRF0402FT10L0	Stackpole Electronics Inc	RES SMD 0.01 Ohm 1% 1/8W 0402
105	R117,R118	2	10R	R0402	—	—	ERJ-2RKF10R0X	Panasonic	RES SMD 10 Ohm 1% 1/10W 0402
106	R120	1	1K	R0402	—	—	ERJ-2RKF1001X	Panasonic Electronic Components	Thick Film Resistors - SMD 0402 1 kOhms 1%
107	R125	1	100R	R0402	—	—	ERJ-2RKF1000X	Panasonic	RES SMD 100 Ohm 1% 1/10 W 0402
108	R219	1	10K	R0402	DNI	DNI	RMCF0402JT10K0	Stackpole Electronics Inc	RES 10 kOhm 1/16 W 5% 0402
109	R129	1	3.9K	R0402	DNI	—	CRCW04023K90FKED	Vishay Intertech-nologies	Thick Film Resistors - SMD 1/16 W 3.9 kOhms 1%
110	R130	1	5K	R0603	DNI	—	PNM0603E5001BST5	Vishay / Thin Film	Thin Film Resistors - SMD 150 mW 5 kOhm 0.1% 25ppm
111	R132	1	5K1	R0402	DNI	—	RMCF0402JT5K10	Stackpole Electronics Inc	RES 5.1 kOhm 1/16 W 5% 0402
112	R170,R226, R227,R228	4	75K	R0402	—	—	RMCF0402JT75K0	Stackpole Electronics Inc	RES SMD 75 kOhm 5% 1/16W 0402
113	R172	1	649	R0603	DNI	—	RC0603FR-07649RL	Yageo	RES SMD 649 kOhm 1% 1/10W 0603
114	R173,R185	2	510K	R0603	DNI	DNI	ERJ-3GEYJ514V	Panasonic	RES SMD 510 kOhm 5% 1/10W 0603
115	R177	1	4.7k	R0603	DNI	—	CRCW06034K70FKEA	VISHAY	Thick Film Resistors - SMD 1/10 W 4.7 kOhm 1%
116	R179	1	0	R0402	—	DNI	RC0402JR-070RL	Yageo	RES 1/10 W 0.0 Ohm 5% 0402
117	R191,R225	2	75K	R0402	DNI	—	RMCF0402JT75K0	Stackpole Electronics Inc	RES SMD 75 kOhm 5% 1/16W 0402
118	R193	1	510K	R0603	DNI	DNI	ERJ-3GEYJ514V	Panasonic	RES SMD 510 kOhm 5% 1/10W 0603
119	R197	1	510K	R0603	DNI	—	ERJ-3GEYJ514V	Panasonic	RES SMD 510 kOhm 5% 1/10W 0603
120	R198,R200, R202,R204, R206,R208, R210,R212, R214,R216	10	0	R0402	DNI	DNI	RC0402JR-070RL	Yageo	RES 1/10 W 0.0 Ohm 5% 0402
121	R199,R201, R203,R205, R207,R209, R211,R213, R215,R217	10	0	R0402	DNI	—	RC0402JR-070RL	Yageo	RES 1/10 W 0.0 Ohm 5% 0402
122	R218,R231	2	100E	R0603	DNI	DNI	CRCW0603100RFKEAHP	Vishay / Dale	Thick Film Resistors - SMD 1/4watt 100 Ohms 1% 100 ppm High Power
123	R221	1	10K	R0402	DNI	DNI	RMCF0402JT10K0	Stackpole Electronics Inc	RES 10 kOhm 1/16 W 5% 0402
124	R223	1	100K	R0402	—	—	RN731ETTP1003B25	KOA Speer	Thin Film Resistors - SMD 100 kOhm, 0402, 0.1%, 25 ppm, 63 mW, 25 V
125	SW1	1	SYS_RST	2psmd_eswitch	—	—	TL1015AF160QG	E-Switch Inc	Switch Tactile SPST-NO 0.05 A 12 V
126	SW2	1	PWR	EG1218O_switch	—	—	EG1218	E-Switch	Power Switch
127	SW3	1	SW DIP-10	CTS_195-10	—	—	195-10MST	CTS Electrocom-ponents	10 Position DIP Switch (Refer to notes below)

Item	Reference	Quantity	Part	PCB Footprint	Comments		Part Number	Manufacturer	Description
128	TP1,TP2,TP3, TP4,TP5,TP6, TP7,TP8,TP9, TP10,TP11, TP12,TP13, TP14,TP15, TP16,TP17, TP18,TP19	19	TP_S_40_63	tp_s_40_63	—	—	—	—	40 mil SMD
129	U1	1	FT2232HL	tqfp64_0p5_12p2x12p2_h1p6	Customer Supplied		FT2232HL	FTDI	USB to UART / FIFO / JTAG/SPI
130	U2	1	93LC56-SO8	so8_50_244	—	—	93LC56C-I/SN	Microchip	IC 93LC56 EEPROM
131	U3	1	STG3693QTR	STG3693QTR	—	—	STG3693QTR	STMicroelec-tronics	STG3693 Series SPDT 4.3 V 4 Ohm Low Volt High Bandwidth Switch - QFN-16 (2.6x1.8)
132	U4	1	LCMXO2-4000ZE-1MG132I	LCMXO2-4000ZE-1MG132C	Customer Supplied		LCMXO2-4000ZE-1MG132I	Lattice Semiconductor	FPGA - Field Programmable Gate Array 1280 LUTs 105 I/O 1.2 V -1
133	U5	1	iCE5LP4K_QFN48	ICE5LP48QFN	Customer Supplied	DNI	ICE5LP4K-QFN48	Lattice Semiconductor	Lattice FPGA
134	U6	1	TS5A23159RSER	TS5A23159_10UQFN	—	—	TS5A23159RSER	Texas Instruments	Switch Dual SPDT
135	U7	1	SN74LV1T34DCKR	SC-70-5	—	SN74LV1T04DCKR	SN74LV1T34DCKR	Texas Instruments	IC Buffer Gate SGL CMOS SC70-5
136	U9	1	TLV3202AIDGKR	TLV3202AIDGKR	DNI	—	TLV3202AIDGKR	Texas Instruments	Analog Comparators Dual, 40 ns, microPower RRI Comparator
137	U10	1	N25Q032A13ESC40F	N25Q032A13_8SOIC	—	—	N25Q032A13ESC40F	Micron	IC Flash 32 Mbit 108 MHz SOIC8
138	U11	1	HD3SS460	HD3SS460	Customer Supplied	—	HD3SS460	Texas Instruments	HS USB Switch
139	U12	1	TXB0104PWR	TXB0104PWR	DNI	—	TXB0104PWR	Texas Instruments	4-Bit Bidirectional Voltage-level Trans-lator With Automatic Direction Sensing
140	U13	1	SN8F22511BX	SN8F22511BX	DNI	—	SN8F22511BX	SONIX	USB 2.0 Full-Speed 8-Bit Micro-Con-troller
141	U14	1	XC6222B331MR-G	SOT25	—	—	XC6222B331MR-G	Torex Semiconductor LTD	IC REG LDO 3.3 V 0.7 A SOT25
142	U15	1	AP2120N-1.2TRG1	SOT23	—	—	AP2120N-1.2TRG1	Diodes INC	IC REG LDO 1.2 V 0.15 A SOT23
143	U16	1	FUSE	0154004DRT	—	—	0154004.DRT	Littlefuse	Surface Mount Fuses Fuseblock w/ fuse 4A OMNI BLOK 154T
144	U17	1	INA199A1DCKT	INA199A1DCKT	—	—	INA199A1DCKT	Texas Instruments	SP Amp Current Shunt Monitor Single 26 V 6-Pin SC-70 T/R
145	U18	1	ISL97656	ISL97656	DNI	—	ISL97656IRTZ	Intersil	Step-Up Regulator with 4A Integrated Switch
146	U19	1	PI3DBS3224	PI3DBS3224	—	—	PI3DBS3224ZNAEX	PERICOMM	HIGH SPEED MUX/SWITCH
147	U20	1	TLV3492AIDCNR	TLV3492AIDCNR	DNI	DNI	TLV3492AIDCNR	Texas Instruments	Analog Comparators Dual Nanopower Push -Pull Out Comparator
148	U21	1	XC6222B331MR-G	SOT25	DNI	—	XC6222B331MR-G	Torex Semiconductor LTD	IC REG LDO 3.3 V 0.7 A SOT25
149	U22	1	iCE40LP8K-CM81	iCE40LP8K-CM81	DNI / Customer Supplied	—	iCE40LP8K-CM81	Lattice Semiconductor	Lattice FPGA-(CM81) 81-Ball ucBGA
150	X1	1	12 MHz	crystal_4p_3p2x2p5	—	—	7M-12.000MAAJ-T	TXC	12 MHz Crystal
151	X2	1	12 MHz	crystal_4p_3p2x2p5	DNI	—	7M-12.000MAAJ-T	TXC	12 MHz Crystal
152	X3	1	ASFLMB-25 MHz	ASFLMB_SMD	—	—	ASFLMB-25.000MHZ-LY-T	Abracon Corporation	OSC MEMS 25.000 MHz CMOS SMD
153	USB TYPE-C EVALUATION BOARD PCB	1	—	—	—	—	305-PD-15-0107	Pactron	—

Mouser Electronics

Authorized Distributor

Click to View Pricing, Inventory, Delivery & Lifecycle Information:

Lattice:

iCE40LP1K-SWG16-EVN ICE5LP4K-USBC-EVN ICE40LP8K-USBC-EVN