DATE	DESCRIPTION	REV.

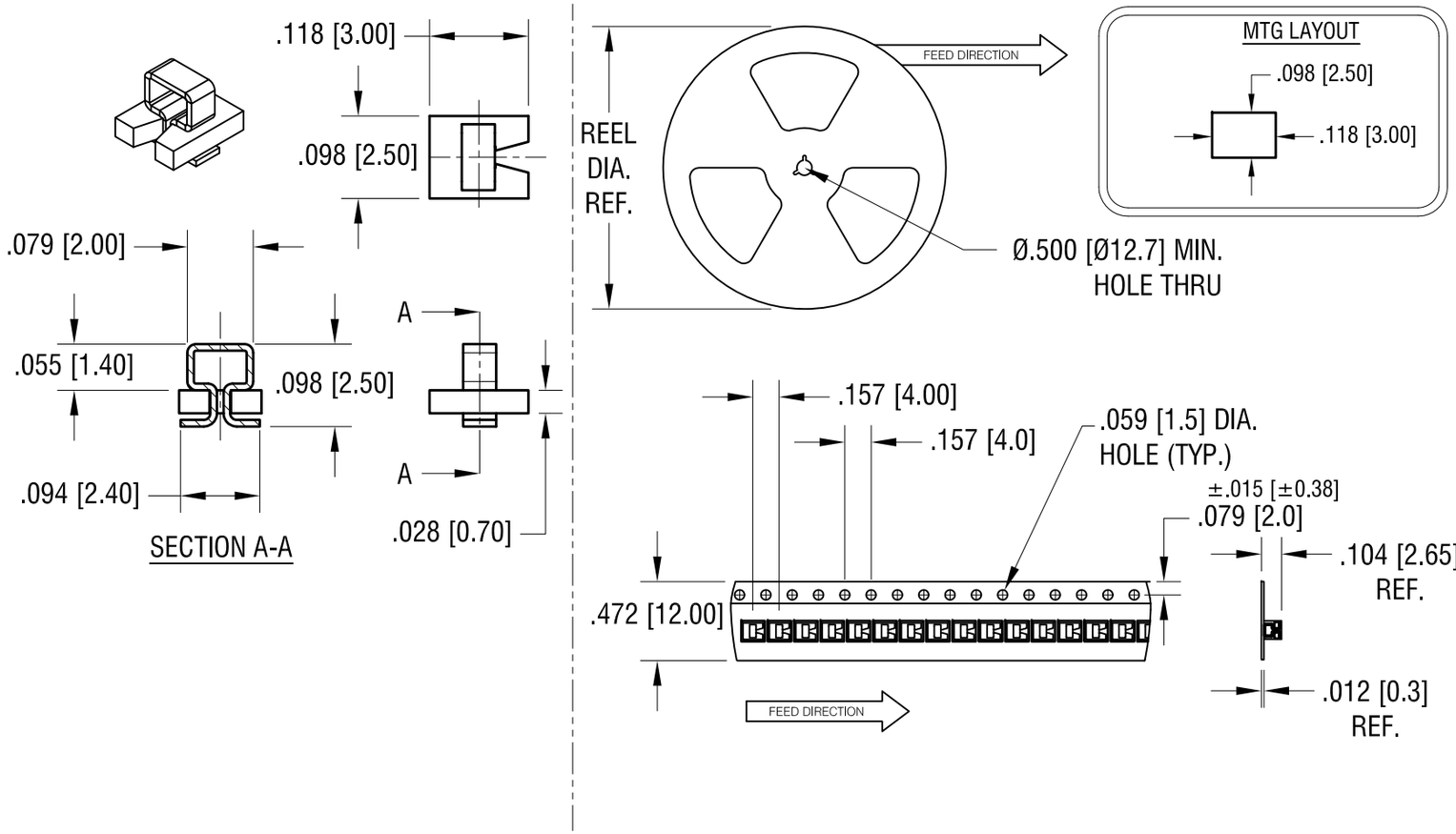

PART NO.	BASE COLOR	PART NO.	BASE COLOR
5190TR	RED	5195TR	BROWN
5191TR	BLACK	5196TR	GREEN
5192TR	WHITE	5197TR	BLUE
5193TR	ORANGE	5198TR	GREY
5194TR	YELLOW	5199TR	PURPLE

NOTES:

1. SUPPLIED ON TAPE AND REEL ONLY.

TAPE AND REEL SPECIFICATIONS:

2. TAPE:
   MAT'L - ALL CONDUCTIVE POLYSTYRENE CARRIER
   ANSI/EIA-481 STANDARD
3. REEL:
   7" [180.0] DIA. 1000 PIECES PER REEL

TEST POINT SPECIFICATIONS:

1. CONTACT:
   MAT'L -.008 [0.20] TH'K PHOSPHOR BRONZE
   FINISH: SILVER PLATE
2. INSULATOR:
   MAT'L - LCP 30% GLASS FILLED
   UL 94V-0
   (SEE COLOR IN THE TABLE)

THIS DOCUMENT IS THE PROPERTY OF KEYSTONE ELECTRONICS CORP. AND SHALL NOT BE REPRODUCED, DISTRIBUTED OR USED AS A BASIS FOR MANUFACTURE WITHOUT PRIOR WRITTEN PERMISSION FROM KEYSTONE ELECTRONICS CORP.

KEYSTONE ELECTRONICS CORP.
www.keyelco.com • NEW HYDE PARK, NY 11040 • Tel (516) 328-7500

PART NAME	TEST POINT		
MATERIAL	AS NOTED		
FINISH	AS NOTED	DRN BY NT	DATE 2.26.19
		APP'D LN	SCALE 5X
TOLERANCES INCH [MM] DECIMAL ± .005 [± 0.13] ANGULAR ± 1° UNLESS OTHERWISE SPECIFIED	CODE C	DWG NO. 5190TR-5199TR	

Mouser Electronics

Authorized Distributor

Click to View Pricing, Inventory, Delivery & Lifecycle Information:

Keystone Electronics:

5193TR 5191TR 5190TR 5199TR 5196TR 5192TR 5195TR 5197TR 5194TR 5198TR