| REV. | DESCRIPTION/ECO NO. | DATE |
|---|---|---|
| | ENGINEERING TO CAD | 3/7/05 |

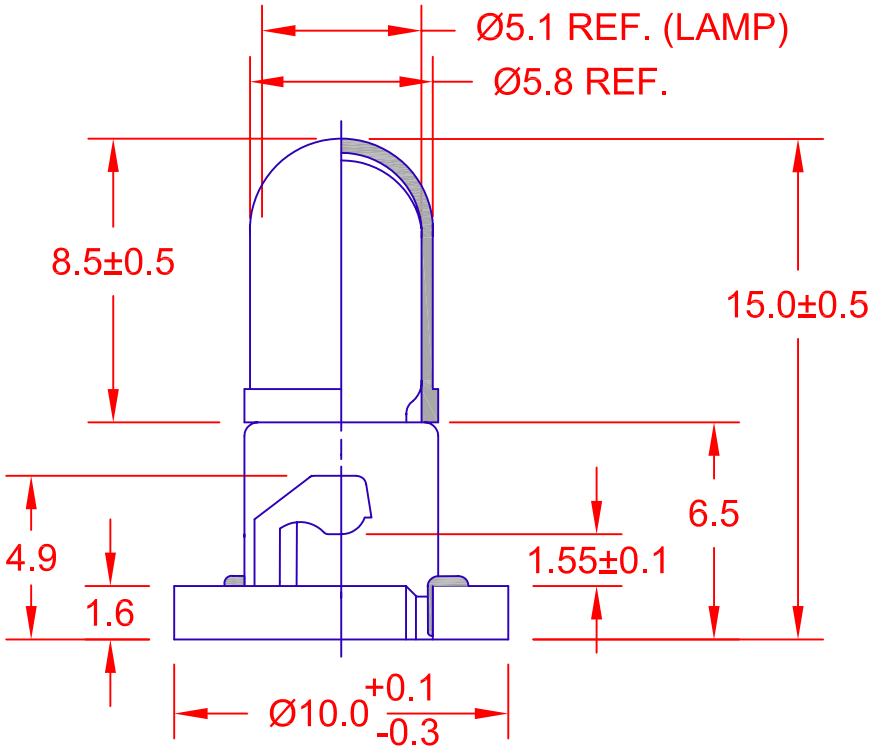


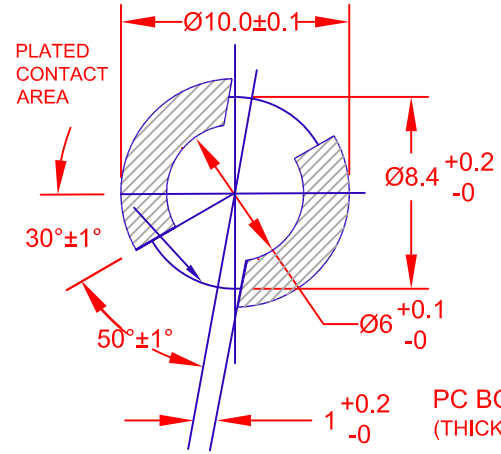


PC BOARD PUNCH PATTERN
(THICKNESS 1.6±0.1)

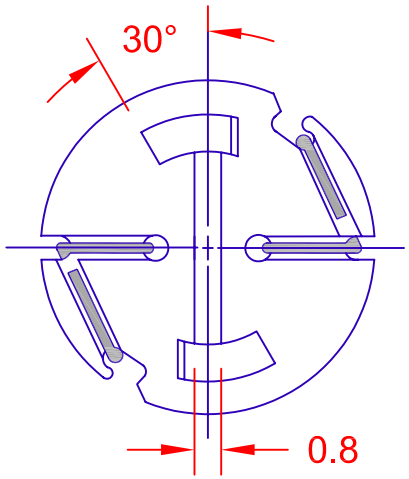


**JKL PART NUMBER: DNW1-EW87/GRA/39-08-6C*****

| JKL LAMP NUMBER | VOLTS RATED | AMPS ± 10% | MSCP ± 25% | LUMENS ± 25% | AVERAGE LIFE HRS. | FILAMENT TYPE |
|---|---|---|---|---|---|---|
| EW87** | 14.0 | .140 | .95* | 12.0* | 7,000 | C-2V |

* LAMP RATING ONLY WITHOUT BASE AND FILTER.
** LAMP GLASS LEAD (Pb) FREE.
*** LAMP AND BASE ASSEMBLY LEAD (Pb) FREE.

CONTACT JKL FOR LEAD (Pb) FREE LOT IDENTIFICATION.

**COMPLETE ASSEMBLY WITH FILTER**

| JKL FILTER NUMBER | APPLICATION VOLTS | x ±.02 | y ±.02 |
|---|---|---|---|
| 39-08-6C | 13.8 | .2664 | .3627 |

COLOR COORDINATES MEASURED IN SPHERE

**BASE COLOR: GRAY**

| | | | | | | |
|---|---|---|---|---|---|---|
| METRIC<br>THIRD ANGLE PROJECTION | DIMENSIONS ARE IN MILLIMETERS<br>TOLERANCE UNLESS OTHERWISE SPECIFIED<br>1 PL +/- 0.3<br>2 PL +/- 0.30<br>ANGLE +/- 0 | JKL COMPONENTS CORPORATION | | | | |
| | | TITLE | T-1 1/4 NEO-WEDGE SOCKET WITH T-1 1/2 LAMP AND 39-08 FILTER | | | |
| DRAWN BY L. WENGSTROM | APPV'D BY J.K. DATE 3/7/05 | SIZE A | FSCM NO. 55335 | DRAWING NO. DNW1-EW87/GRA/39-08-6C | | |
| - CAD DRAWING - MANUAL REVISIONS NOT PERMITTED | | SCALE NONE | | RELEASED DATE 3/7/05 | REVISION DATE | REV. NO. / SHEET 1 OF 1 |

# Mouser Electronics

Authorized Distributor

Click to View Pricing, Inventory, Delivery & Lifecycle Information:

JKL Components:

DNW1-EW87/GRA/39-08-6C