版数 VER.	年月日 DATE	CN NO.	変更内容 DESCRIPTION	製図 DR.	担当 CHK.	査閲 APPD.	承認 APPD.
2	26/JUN/2014	008839	Specification is changed.		S.YAMAGUCHI	M.SASAKI	T.SHINDOU
3	30/MAR/2015	012835	Correct an error.		S.YAMAGUCHI	M.SASAKI	T.SHINDOU
4	29/JUN/2015	013559	Add KEY version(KEY-M).		S.YAMAGUCHI	M.SASAKI	T.MASUMOTO

図面番号(DRAWING NO.) SJ114364

WISDOM承認 2015/07/02

DESIGNATION

SM3ZS067B120※※2

- SERIES シリーズ
- Z:LIF TYPE Z:低挿入タイプ
- S:STANDARD R:REVERSE
- NO. OF CONTACTS 芯数
- MOUNTING TYPE 実装タイプ B:MID MOUNT TYPE
- PRODUCT HEIGHT 製品高さ 120:1.2mm
- CONTACT FINISH 接点仕上げ A:Au(0.13μm MIN) B:Au(0.25μm MIN)
- KEY POSITION ④ TYPE:B,E,M
- MODIFICATION CODE モディファイコード 1:THROUGH HOLE HOLD DOWN 2:SMT HOLD DOWN

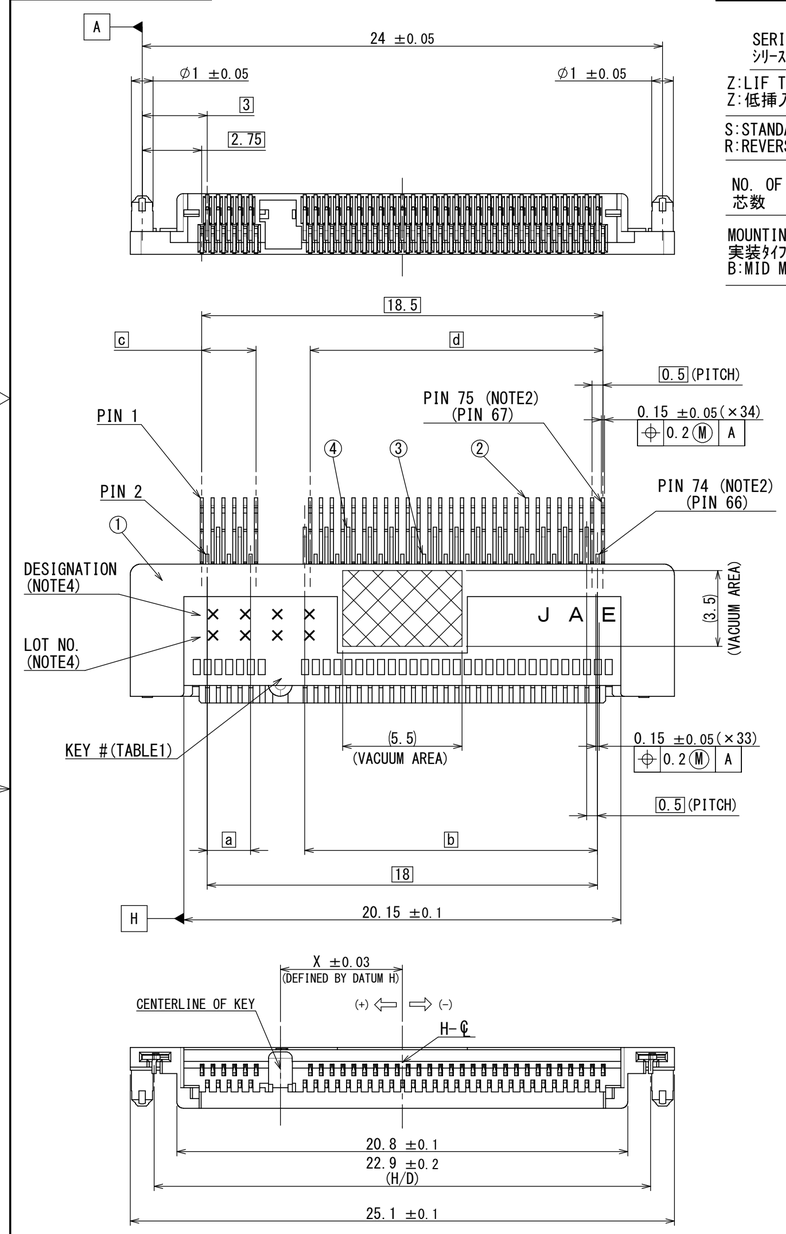

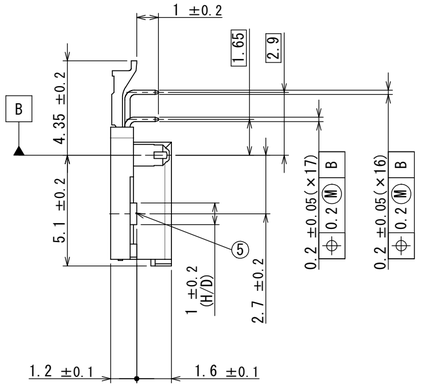

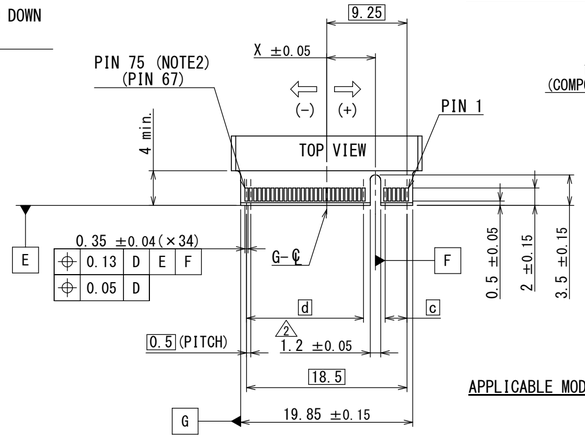

APPLICABLE MODULE DIMENSION (REF.) (NOTE2)
SCALE(2 : 1)

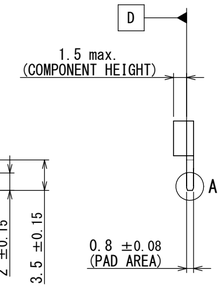

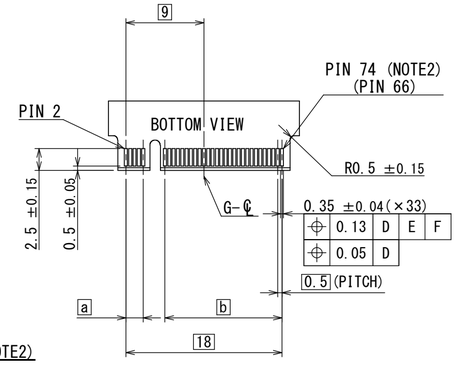

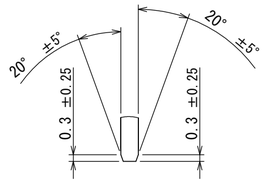

A
(5 : 1)

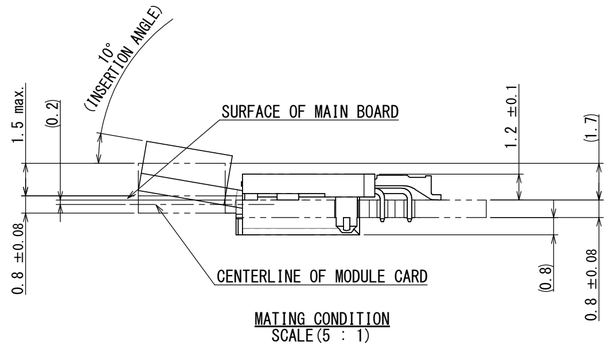

MATING CONDITION
SCALE(5 : 1)

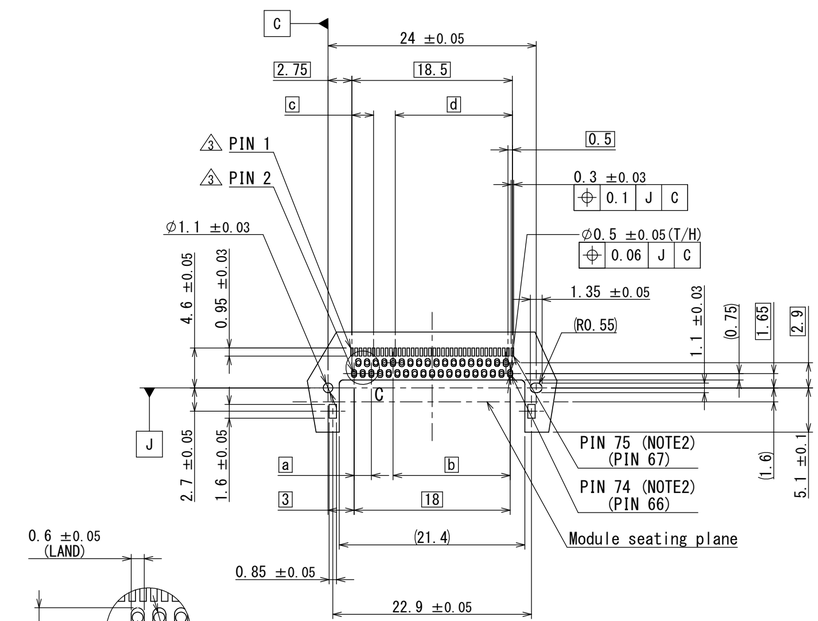

APPLICABLE P.C.B LAYOUT
SCALE(2:1)

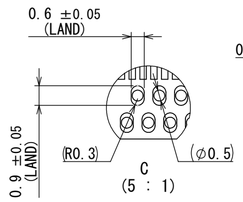

C
(5 : 1)

NOTE1. THE COPLANARITY OF CONTACT AND HOLD DOWN SHALL BE 0.1mm MAXIMUM ON THE SURFACE TABLE.
NOTE2. THIS NUMBER IS PIN-OUT NUMBER DEFINED BY NGFF SPECIFICATION.
NOTE3. THIS CONNECTOR IS HALOGEN FREE CORRESPONDENCE PRODUCT.
NOTE4. PRODUCTION LOT No.&MODIFY CODE AS INDICATED.

(Ex. LOT NO.) T 5 Y B
- LOT NUMBER OF CURRENT DAY (SEE TABLE 2)
- MONTH (1 TO 9 FOR JAN. TO SEPT, RESPECTIVELY, OCT.:O, NOV.:X, DEC.:Y)
- YEAR (LAST DIGIT ONLY)
- MANUFACTURE CODE

(DESIGNATION) S M 3 B
- KEY POSITION ④ TYPE:B,E,M
- SERIES PREFIX

TABLE 1 ④

KEY#	X	a	b	c	d
B	+5.625	2	13.5	2.5	13.5
E	+2.625	5	10.5	5.5	10.5
M	-6.125	14	1.5	14	2

TABLE 2. LOT NUMBER CODE OF CURRENT DAY (END OF LOT No.)

DAY	1	2	3	4	5	6	7	8	9	10
CODE	1	2	3	4	5	6	7	8	9	0

DAY	11	12	13	14	15	16	17	18	19	20
CODE	A	B	C	D	E	F	G	H	J	K

DAY	21	22	23	24	25	26	27	28	29	30	31
CODE	L	M	N	P	Q	R	S	T	V	W	X

符号 NO.	名称 DESCRIPTION	個数 QTY.	材料 MATERIAL	仕上 FINISH	備考 REMARKS
5	HOLD DOWN	2	COPPER ALLOY	TIN PLATING OVER Ni	
4	LOWER CONTACT2	16	COPPER ALLOY	CONTACT AREA: REFER TO DESIGNATION SOLDERING AREA: Au FLASH OVER Ni	
3	LOWER CONTACT1	17	COPPER ALLOY	CONTACT AREA: REFER TO DESIGNATION SOLDERING AREA: Au FLASH OVER Ni	
2	UPPER CONTACT	34	COPPER ALLOY	CONTACT AREA: REFER TO DESIGNATION SOLDERING AREA: Au FLASH OVER Ni	
1	INSULATOR	1	THERMO PLASTIC		

仕様書(SPECIFICATION)	第1版(ORIGINAL DATE) 22/JUL/2013	尺度(SCALE) 5:1	シリーズ(SERIES) SM3
	製図 DR.	名称(TITLE) SM3ZS067B120**2	日本航空電子工業株式会社 JAPAN AVIATION ELECTRONICS INDUSTRY, LTD.
一般公差(GENERAL TOLERANCE) 寸法(DIMENSION) . ±0.8 .× ±0.4 .×× ±0.1 .××× ± 角度(ANGLES) ×° ± ×°×' ±	担当 CHK. S.YAMAGUCHI		
	査閲 APPD. R.KATOU		
	承認 APPD. T.SHINDOU		
	単位(UNIT):mm	質量(MASS)	図面番号(DRAWING NO.) SJ114364
			SIZE A2 / 版数(VER.) 4

JAE-CONNECTOR.COM Reference Only

JAE Connector DIV. Proprietary.Copyright(C) 2013, Japan Aviation Electronics Industry, LTD.

DCF-C-213K(12.08)

Mouser Electronics

Authorized Distributor

Click to View Pricing, Inventory, Delivery & Lifecycle Information:

JAE Electronics:

SM3ZS067B120ABR1500 SM3ZS067B120AB2R1500 SM3ZS067U410-NUT1-R1200