Honeywell
THE POWER OF **CONNECTED**

MICRO SWITCH Heavy-Duty Limit Switch (Factory Sealed) *002423*

HDLS LSY-FP Series *Issue 1*

Datasheet

DESCRIPTION

Honeywell offers a wide line of heavy duty industrial limit switches including the factory sealed heavy duty limit switches. When the limit switch is exposed to indoor or outdoor environments with adverse wet or dusty conditions, consider the Honeywell harsh-duty, epoxy-encapsulated factory sealed LSY-FP Series of limit switches. The limit switches incorporate the same rugged die-cast metal housings and seals as the HDLS (Heavy Duty Limit Switch) which have been in service for more than 40 years. The metal body of the limit switch is epoxy-encapsulated to prevent dust or liquid migrating to the internal switch contacts which is preferred for adverse environmental conditions.

The LSY-FP Series of limit switches are available with a wide variety of actuating heads with a single pole or double pole contact block. The limit switches are pre-wired with a PVC industrial grade STOOW-A cable (oil resistant and outdoor weather resistance environments) or an integral mini-style connector.

For global acceptance, the LSY-FP Series of limit switches include CE, CSA, and UL certifications.

DIFFERENTIATION

- Epoxy encapsulated body in metal housing to minimize any moisture or dust from entering the switch chamber
- Pre-wired integral cable or “mini-style” connector for reduced installation
- All-metal drive train for reliable operating characteristics
- Side rotary head incorporates stainless steel shaft with bronze bearing for increased mechanical life of up to 50 million operations

FEATURES

- Epoxy encapsulated body with integral cable or connector
- Environmentally sealed; IP 65/66/67 and NEMA 1, 3, 3R, 4, 6, 6P, 12, and 13 (with mini-style connector); IP 65/66/67 and NEMA 1, 3, 3R, 4, 6, 6P, and 12 (with STOOW-A cable)
- Rugged corrosion-resistant metal zinc head and body are phosphate treated and epoxy coated
- Diaphragm seal between head and body provide an extra measure of sealing
- Fluorocarbon seals for chemically harsh environments or fluorosilicone seals for low temperature applications
- Actuator heads can be field adjusted to any one of four positions 90° apart
- Rotary actuated heads are factory adjusted for CW and CCW actuation of the switch. Heads can be field adjusted for CW only or CCW only to actuate switch
- Available with 1NC/1NO or 2NC/2NO double break contacts
- CE, CSA, and UL certifications for global acceptance

POTENTIAL APPLICATIONS

- Machine tools
- Automotive assembly and fabricating machinery
- Material handling
- Outdoor electromechanical structures
- Bales/compactors
- Food and beverage machinery
- Power plants and power generating machinery
- Off-road equipment
- Valves
- Transportation hubs
- Water treatment and waste water treatment equipment

VALUE TO CUSTOMERS

- Harsh-duty design for many tough environments including dust, dirt, grime, heat, and wash down
- Modular design enhances cutomer flexibility
- Wide variety of actuators, head styles, and switch options
- Silver contacts standard or optional gold-plated contacts
- Made in USA

PORTFOLIO

The heavy-duty HDLS epoxy encapsulated limit switches are a part of Honeywell’s heavy duty HDLS Standard Series and the LS2 Stainless Steel Series. Honeywell has a comprehensive line that includes global, medium-duty, compact, hazardous area, and specialty limit switches. To view the entire product portfolio, click here.

Table 1. Specifications

Characteristic	Parameter		
Product type	MICRO SWITCH heavy-duty epoxy encapsulated limit switches		
Certifications	UL, CSA, CE		
Reference standards	UL508, CSA C22.2 # 14, EN/IEC 60947-5-1		
Housing material	Electrostatic epoxy coated zinc		
Actuator heads	Side plunger - adjustable Side roller plunger Top plunger - adjustable Top rotary Wobble - coil spring	Side plunger - pin Side rotary Top plunger - pin Wobble - cable Wobble - plastic rod	Side plunger maintained - pin Side rotary maintained Top roller plunger Wobble - cat whisker Wobble - spring wire
Termination	SPDT: 5 conductor STOOW-A PVC cable Ø12,7 mm [0.5 in] or 5-pin mini-style connector DPDT: 9 conductor STOOW-A PVC cable Ø15,7 mm [0.62 in] or 9-pin mini-style connector For other terminations, contact your local Honeywell source		
Contact options	1NC/1NO, 2NC/2NO, 2NC/2NO center neutral, 2NC/2NO sequential		
Contact type	Snap action double break (form Za); same polarity each pole		
Contact material	Silver alloy (standard), gold-plated (low-energy applications)		
Utilization category	AC15, A600; DC13, R300		
Rated operational voltage (Ue)	600 Vac, 250 Vdc		
Rated operational current (Ie)	1.2 A, 0.1 A		
Rated thermal current (Ith)	10 A, 2.5 A		
Rated insulation voltage (Ui)	600 V		
Rated impulse withstand voltage (Uimp)	2500 V		
Short circuit protection device (SCPD) type and rating	Class J fuse, rated 10 A, 600 V		
Pollution degree	3		
Sealing	STOOW-A cable: IP65/66/67, NEMA 1, 3, 3R, 4, 6, 6P, 12, 13 Mini-style connector: IP65/66/67, NEMA 1, 3, 3R, 4, 6, 6P, 12		
Operating temperature[1]	Refer to table 5 on page 7 for limit switch STOOW-A cable; -20 °C to 105 °C [-4 °F to 221 °F] Mini-style connector; -20 °C to 105 °C [-4 °F to 221 °F]		
Vibration	10 g, conforming to IEC60068-2-6		
Shock (actuator not fitted)	50 g, conforming to IEC60068-2-27		

[1]Where temperature extremes are involved, the application should be reviewed to ensure the cable or connector is suitable.

MICRO SWITCH Heavy-Duty Limit Switch, Factory Sealed (LSY-FP Series)

Table 2. Electrical Characteristics
10 A Thermal (Ith)
ac Volts; Pilot Duty; AC15, A600

Electrical Rating	Circuitry	Vac	Amps at 0.35 PF (make)	Amps at 0.35 PF (carry and break)
AC15, A600	SPDT, DPDT	120	60	6
		240	30	3
		480	15	1.5
		600	12	1.2

Table 3. Electrical Characteristics
Pilot Duty; DC13, R300

Electrical rating	Circuitry	Vdc	Make & Break Amps Inductive	Make & Break Amps Resistive
DC13, R300	SPDT, DPDT	120	0.25	0.8
		240	0.15	0.4

Table 4. Electrical Characteristics
MICRO SWITCH HDLS Series limit switches are capable of the following low voltage loads

Circuitry	Vdc	Amps Inductive	Amps Resistive
SPDT	24	10	10
DPDT	24	10	10

Figure 1. Product Nomenclature: Side Rotary and Plunger Versions

LSY — Switch Type

HDLS Series Epoxy Encapsulated Limit Switch

A — Actuator Heads
(unless noted, all side rotary heads are CW/CCW)

A	Side rotary, momentary	C	Top pin plunger, momentary
B	Top rotary, momentary	D	Top roller plunger, momentary
H	Side rotary, momentary, low pretravel & torque	V	Top adjustable pin plunger, momentary
P	Side rotary, momentary, low pretravel	E	Side pin plunger, momentary
R	Side rotary, momentary, low torque	F	Side roller plunger, momentary
U	Side rotary, momentary, 5° max. pretravel	W	Side adjustable pin plunger, momentary
N	Side rotary, maintained, CW (reset), CCW (trip)	G	Side pin plunger, maintained

NOTE: Not all combinations of model codes are available. Please contact your local Honeywell provider for assistance.

C — Seals

B	Fluorosilicone seals for low temp. applications
C	Fluorocarbon seals for higher temp./chem. resistant applications

4LX — Contact Block & Termination

3KP	1NC/1NO w/ grd, 5 conductor cable
3KQ	1NC/1NO w/ grd, 5-pin mini-style connector
5KP	1NC/1NO w/ grd & 120 Vac indicator, 5-conductor cable
5KQ	1NC/1NO w/ grd & 120 Vac indicator, 5-pin mini-style connector
4LX	2NC/2NO w/ grd, 9-conductor cable
4SX	2NC/2NO w/ gold contacts and grd, 9-conductor cable
7LR	2NC/2NO w/ grd, 9-pin mini-style connector
7SR	2NC/2NO w/ gold contacts and grd, 9-pin mini-style connector

–

FP — Body Style

FP	Epoxy encapsulated body

Figure 2. Product Nomenclature: Wobble Versions

LSY J B 3KQ - 7M FP

Switch Type

HDLS Series Epoxy Encapsulated Limit Switch

Actuator Head

J	Top wobble, momentary
K	Top cat whisker wobble, momentary

Seals

B	Fluorosilicone seals for low temp. applications
C	Fluorocarbon seals for higher temp./chem. resistant applications

NOTE: Not all combinations of model codes are available. Please contact your local Honeywell provider for assistance.

Contact Block & Termination

3KP	1NC/1NO w/ grd, 5 conductor cable
3KQ	1NC/1NO w/ grd, 5-pin mini-style connector
5KP	1NC/1NO w/ grd & 120 Vac indicator, 5-conductor cable
5KQ	1NC/1NO w/ grd & 120 Vac indicator, 5-pin mini-style connector
4LX	2NC/2NO w/ grd, 9-conductor cable
4SX	2NC/2NO w/ gold contacts and grd, 9-conductor cable
7LR	2NC/2NO w/ grd, 9-pin mini-style connector
7SR	2NC/2NO w/ gold contacts and grd, 9-pin mini-style connector

Wobble Style Heads

J-Style Wobbles

7A	140 mm [5.5 in], plastic rod
7M	330 mm [13.0 in], spring wire
7N	140 mm [5.5 in], flexible cable

K-Style Wobbles

8A	140 mm [5.5 in], cat whisker
8B	190 mm [7.5 in], cat whisker
8C	140 mm [5.5 in], coil spring

Body Style

FP	Epoxy encapsulated body

Figure 3. Product Nomenclature: Side Rotary Center Neutral and Sequential Versions

LSY M B 4NX - FP

Switch Type

HDLS Series Epoxy Encapsulated Limit Switch

Actuator Head

L	Side rotary, seq. CW and CCW momentary
M	Side rotary, CN, CW, and CCW momentary

Seals

B	Fluorosilicone seals for low temp. applications
C	Fluorocarbon seals for higher temp./chem. resistant applications

NOTE: Not all combinations of model codes are available. Please contact your local Honeywell provider for assistance.

Contact Block & Termination

4MX	2NC/2NO sequential w/ grd, 9-conductor cable
4TX	2NC/2NO sequential w/ gold contacts and grd, 9-conductor cable
7MR	2NC/2NO sequential w/ grd, 9-pin mini-style connector
7TR	2NC/2NO sequential w/ gold contacts and grd, 9-pin mini-style connector
4NX	2NC/2NO center neutral w/ grd, 9-conductor cable
4UX	2NC/2NO center neutral w/ gold contacts and grd, 9-conductor cable
7NR	2NC/2NO center neutral w/ grd, 9-pin mini-style connector
7UR	2NC/2NO center neutral w/ gold contacts and grd, 9-pin mini-style connector

Body Style

FP	Epoxy encapsulated body

MICRO SWITCH Heavy-Duty Limit Switch, Factory Sealed (LSY-FP Series)

MICRO SWITCH HDLS SERIES ACTUATOR HEADS

SIDE ROTARY: Available levers provide greater versatility. Actuating heads may be indexed in any of four positions, 90° apart. All are momentary action except maintained head (LSN Series).

	LSA - Standard: 15° maximum pretravel, 5° (single pole) and 7° (double pole) maximum differential travel, 60° minimum overtravel.

LSR - Low operating torque: 0.19 Nm [1.7 in lb] maximum operating torque. 60° minimum overtravel, 15° maximum pretravel.

LSN - Maintained contact: Maintained on counterclockwise rotation and reset on clockwise rotation, and vice versa.

LSP - Low differential: 3° (single pole) and 4° (double pole) maximum differential travel. 68° minimum overtravel, 9° maximum pretravel.

LSH - Low torque, low differential travel: Features low operating torque and narrow differential travel. 68° minimum overtravel.

LSU - Low pretravel: 5° max. pretravel, 70° min. overtravel.

LSL - Sequence action: Delayed action between operation of two poles. 48° minimum overtravel.

LSM - Center neutral: One pole operates on the clockwise rotation, and the other pole on the counterclockwise rotation. 53° minimum overtravel.

TOP ROTARY: Available levers provide greater versatility. Momentary action.

	LSB: With 100° minimum overtravel. Various levers that fit side rotary shafts may be used on the top rotary shaft. Switch may be used when increased overtravel is required. Momentary action.

TOP PLUNGERS: Available with 4,83 mm [0.19 in] minimum overtravel. Top pin plungers are offered in pin plunger, an adjustable plunger, and a roller plunger.

	LSC - Top pin plunger: A stainless steel plunger for in-line actuating motion. A boot seal on the plunger and a seal between the actuator head and housing. Momentary action.
	LSD - Top roller plunger: A stainless steel roller and plunger that is adjustable to 90° angles to accept cam or slide operation from any of two directions. Boot seal on the plunger and a seal between the actuator head and housing. Momentary action
	LSV - Adjustable top pin plunger: Includes a stainless steel adjustable screw. The operating points of the switch can be adjusted from 52,8 mm to 59,3 mm [2.085 in to 2.335 in]. Seals are the same as the pin plunger. Momentary action.

MICRO SWITCH HDLS SERIES ACTUATOR HEADS

SIDE PLUNGERS: Available with 4,83 mm [0.19 in] minimum overtravel. Side plungers are offered in plain plunger, an adjustable plain plunger, a roller plunger, and a maintained plunger.

	LSE - Side pin plunger: A stainless steel plunger for actuating motion inline with the plunger travel. Actuating head may be indexed in any of four positions, 90° apart. A boot seal on the plunger and a seal between the head and housing. Momentary action.
	LSF - Side roller plunger: With a stainless steel roller pluger, this switch fits in close quarters under cams and slides. The head may be indexed in any of four positions, 90° apart. **The roller can be turned vertical or horizontal to the switch**. Seals are same as side pin plunger. Momentary action.

	LSW - Adjustable side pin plunger: With a stainless steel adjustable screw, this switch has the same features of the side plain plunger plus the means to adjust the operating points of the switch from 41 mm to 47,4 mm [1.615 in to 1.865 in]. Seals are same as side pin plunger. Momentary action.
	LSG - Maintained contact side pin plunger: Offers a maintained contact on actuation of the switch. A reverse motion of the plunger resets the switch. Sealing is the same as other side plunger actuation heads.

WOBBLE LEVER ACTUATING HEADS: Heads come with either a spring wire, plastic rod, or steel cat whisker. Any movement of the lever (except pull) will actuate the switch.

LSJ1A-7M - Spring wire: 300 Series SST wire may be formed for special applications.	**LSJ1A-7N - Flexible actuator:** Designed with a tin-plated cable.	**LSK1A-8C - Coil spring:** Designed with a 300 Series SST coil spring.	**LSJ1A-7A - Plastic rod:** Recommended where possible scratching or marring by the actuator is to be avoided.	**LSK1A-8A - Cat whisker:** 300 Series SST actuator designed for low operating force applications.

MICRO SWITCH Heavy-Duty Limit Switch, Factory Sealed (LSY-FP Series)

Table 5. Temperature Limits

	Low Temperature HDLS (Fluorosilicone Sealed): Y_B				High Temperature HDLS (Fluorocarbon Sealed): Y_C		
	Low Limit		High Limit		Low Limit		High Limit
	-40 °C [-40 °F]	-29 °C [-20 °F]	93 °C [200 °F]	121 °C [250 °F]	-12 °C [10 °F]	-1 °C [30 °F]	121 °C [250 °F]
LSA - Side Rotary Momentary	X			X	X		X
LSB - Top Rotary		X		X		X	X
LSC - Top Plain Plunger	X		X		X		X
LSD - Top Roller Plunger	X		X		X		X
LSE - Side Plain Plunger	X		X		X		X
LSF - Side Roller Plunger	X		X		X		X
LSG - Side Plunger, Maintained		X	X			X	X
LSH - Side Rotary, Low PT, Low Torque		X		X		X	X
LSJ - Wobble Stick	X			X	X		X
LSK - Cat Whisker		X		X	X		X
LSL - Side Rotary, Sequence	X			X	X		X
LSM - Side Rotary, Center Neutral	X			X		X	X
LSN - Side Rotary, Maintained		X		X		X	X
LSP - Side Rotary, Low Pretravel	X			X	X		X
LSR - Side Rotary, Low Torque		X		X		X	X
LSU - 5° Low Pretravel	X			X	X		X
LSV - Top Adjustable Plunger	X		X		X		X
LSW - Side Adjustable Plunger	X		X		X		X

NOTE: The pre-wired cable or mini-style connector have a temperature rating of -20 °C to 105 °C [-4 °F to 221 °F]. When temperature extremes are involved, the application should be reviewed to ensure cable or connector suitability.

WIRING DIAGRAMS

Figure 4. 3KP, 3KPB, 3KPC

1NC/1NO with 5-conductor cable

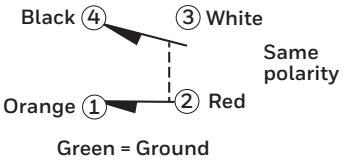

Figure 5. 3KQ

1NC/1NO with 5-pin integral connector

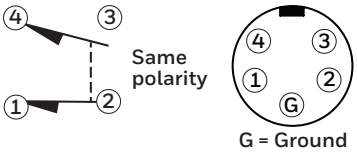

Figure 6. 5KP

1NC/1NO with 120 Vac indicator and 5-conductor cable

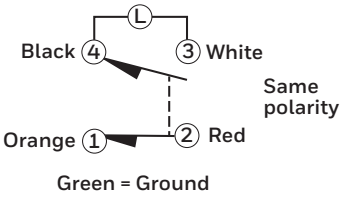

Figure 7. 5KQ

1NC/1NO with 120 Vac indicator and 5-pin integral connector

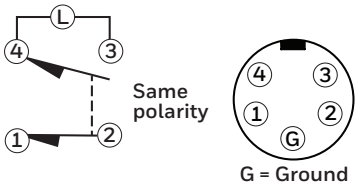

Figure 8. 4LX, 4SX

2NC/2NO with 9-conductor cable

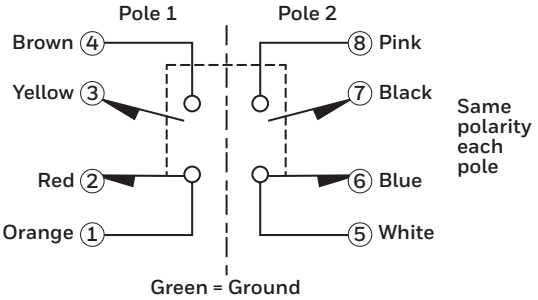

Figure 9. 7LR, 7SR

2NC/2NO with 9-pin integral connector

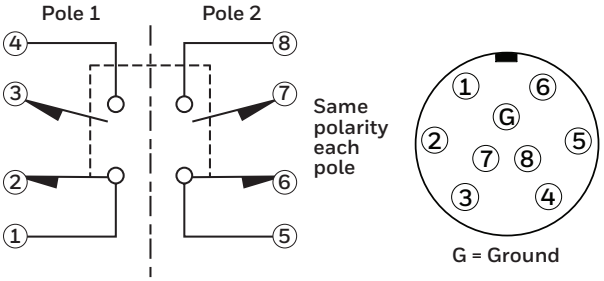

Figure 10. 4MX, 4TX

2NC/2NO sequential with 9-conductor cable

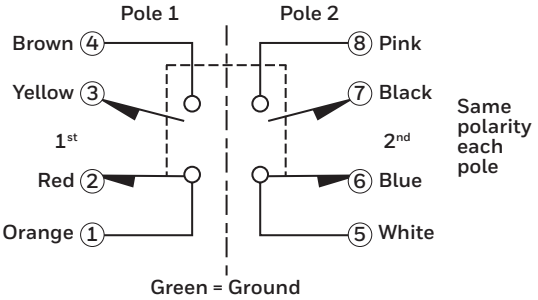

Figure 11. 7MR, 7TR

2NC/2NO sequential with 9-pin integral connector

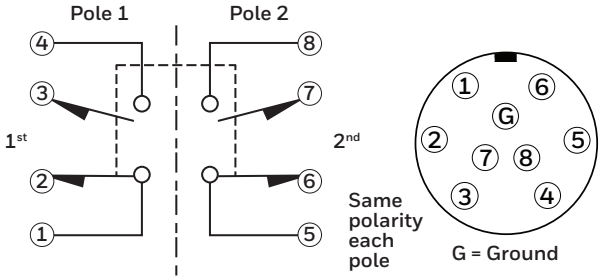

Figure 12. 4NX, 4UX

2NC/2NO center neutral with 9-conductor cable

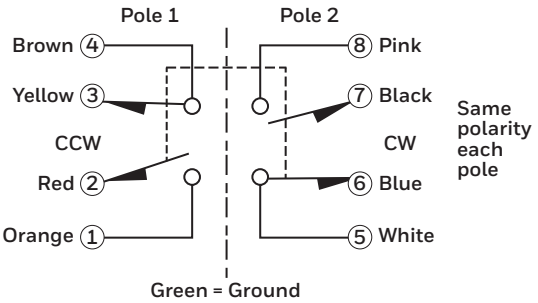

Figure 13. 7NR, 7UR

2NC/2NO center neutral with 9-pin integral connector

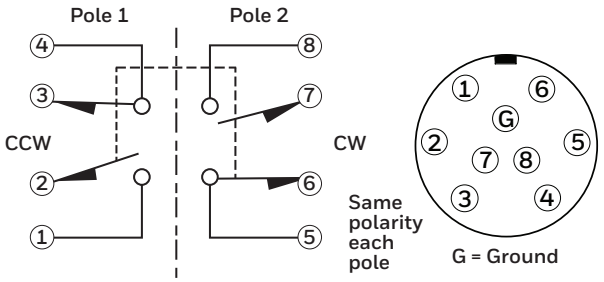

Note: Wiring diagrams for limit switches with maintained contacts are illustrated with lever/shaft in CW position.

MICRO SWITCH Heavy-Duty Limit Switch, Factory Sealed (LSY-FP Series)

ELECTROMECHANICAL SWITCHES
Definitions below explain the meaning of operating characteristics. Characteristics shown in tables were chosen as most significant. They are taken at normal room temperature and humidity. These may vary as temperature and humidity conditions differ. Sketches show how characteristics are measured for in-line plunger actuation and rotary actuation.

Linear dimensions for in-line actuation are from top of plunger to a reference line, usually the center of the mounting holes. Rotary actuated HDLS limit switches have the characteristics in degrees of angular rotation.

Differential Travel (D.T.) – Plunger or actuator travel from point where contacts "snap-over" to point where they "snapback."

Free Position (F.P.) – Position of switch plunger or actuator when no external force is applied (other than gravity).

Full Overtravel Force – Force required to attain full overtravel of actuator.

Operating Position (O.P.) – Position of switch plunger or actuator at which point contacts snap from normal to operated position. Note that in the case of flexible or adjustable actuators, the operating position is measured from the end of the lever or its maximum length. Location of operating position measurement shown on mounting dimension drawings.

Operating Force (O.F.) – Amount of force applied to switch plunger or actuator to cause contact "snap-over." Note in the case of adjustable actuators, the force is measured from the maximum length position of the lever.

Overtravel (O.T.) – Plunger or actuator travel safely available beyond operating position.

Pretravel (P.T.) – Distance or angle traveled in moving plunger or actuator from free position to operating position.

Release Force (R.F.) – Amount of force still applied to switch plunger or actuator at moment contacts snap from operated position to unoperated position.

Total Travel (T.T.) – Distance from actuator free position to overtravel limit position.

ROTARY ACTUATION

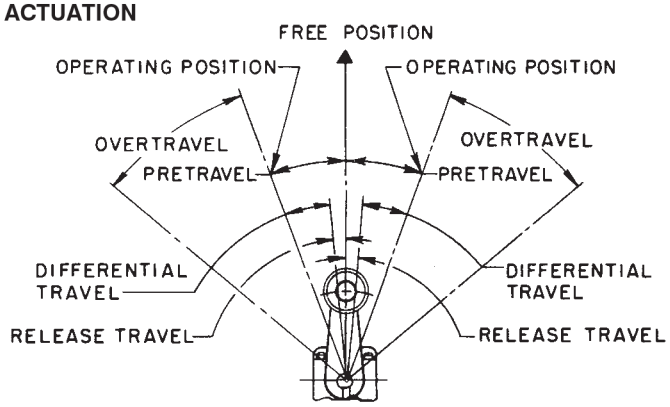

IN-LINE PLUNGER ACTUATION

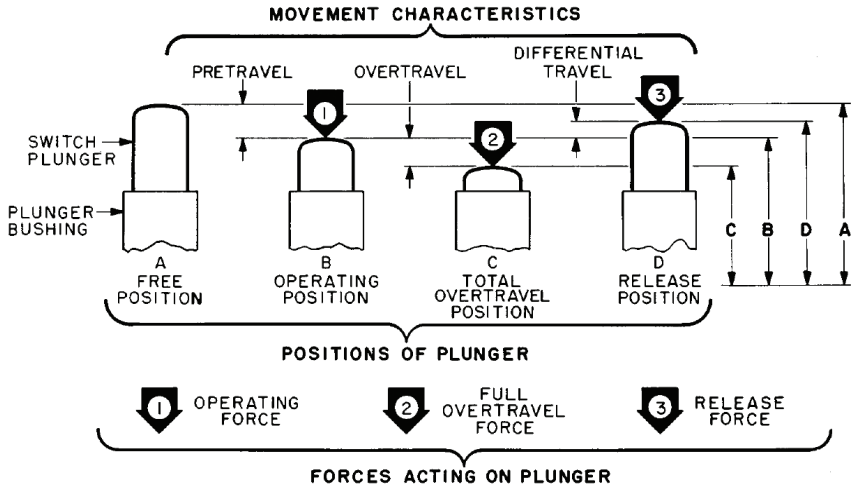

Bar Chart Description

NC = Normally closed contact(s)
NO = Normally open contact (s)

■ contact closed
□ contact open

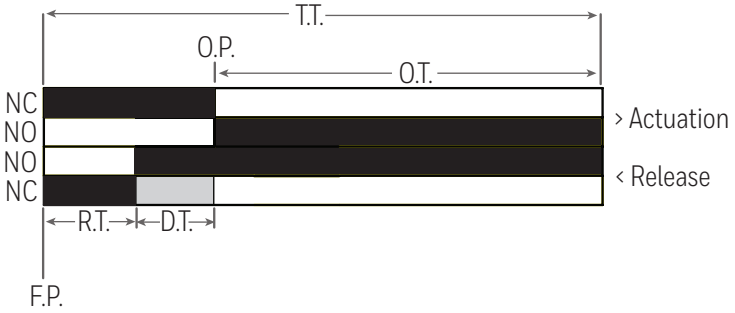

Table 6. Order Guide: Side Rotary

Side Rotary Catalog Listings	Actuator Head Type	Contact Arrange-ment (snap action)	Bar Chart (degrees) ■ Contact closed ☐ Contact open	Electrical Termination	Wiring Diagram	Note
LSYAC3KP-FP	Side rotary, standard torque & travel	1NC/1NO	Pretravel • 15° max. Diff. travel (SPDT) • 5° max. Diff travel (DPDT) • 7° max. Overtravel • 60° min. Oper. torque • 0,45 Nm [4 in-lb] max.	5 conductor STOOW-A cable, 3,6 m [12.0 ft]	Figure 4	Standard switch
LSYAB3KP-FP	Side rotary, standard torque & travel	1NC/1NO		5 conductor STOOW-A cable, 3,6 m [12.0 ft]	Figure 4	Low temp. switch, cable not suitable for flexing
LSYAC3KPC-FP	Side rotary, standard torque & travel	1NC/1NO		5 conductor STOOW-A cable, 6,1 m [20.0 ft]	Figure 4	Standard switch
LSYAB3KPC-FP	Side rotary, standard torque & travel	1NC/1NO		5 conductor STOOW-A cable, 6,1 m [20.0 ft]	Figure 4	Low temp. switch, cable not suitable for flexing
LSYAC3KPB-FP	Side rotary, standard torque & travel	1NC/1NO		5 conductor STOOW-A cable, 9,1 m [30.0 ft]	Figure 4	Standard switch
LSYAC3KQ-FP	Side rotary, standard torque & travel	1NC/1NO		5-pin mini-style inte-gral male connector	Figure 5	Standard switch
LSYAB3KQ-FP	Side rotary, standard torque & travel	1NC/1NO		5-pin mini-style inte-gral male connector	Figure 5	Low temp. switch
LSYAC5KP-FP	Side rotary, standard torque & travel	1NC/1NO		5 conductor STOOW-A cable, 3,6 m [12.0 ft]	Figure 6	Standard switch with 120 Vac indicator
LSYAC5KPC-FP	Side rotary, standard torque & travel	1NC/1NO		5 conductor STOOW-A cable, 6,1 m [20.0 ft]	Figure 6	Standard switch with 120 Vac indicator
LSYAC5KQ-FP	Side rotary, standard torque & travel	1NC/1NO		5-pin mini-style inte-gral male connector	Figure 7	Standard switch with 120 Vac indicator
LSYAC4LX-FP	Side rotary, standard torque & travel	2NC/2NO		9 conductor STOOW-A cable, 3,6 m [12.0 ft]	Figure 8	Standard switch
LSYAB4LX-FP	Side rotary, standard torque & travel	2NC/2NO		9 conductor STOOW-A cable, 3,6 m [12.0 ft]	Figure 8	Low temp. switch, cable not suitable for flexing
LSYAC7LR-FP	Side rotary, standard torque & travel	2NC/2NO		9-pin mini-style inte-gral male connector	Figure 9	Standard switch
LSYUC3KP-FP	Side rotary, standard torque with low pretravel	1NC/1NO	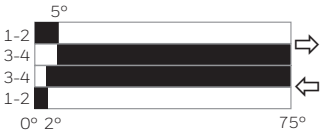 Pretravel • 5° max. Diff. travel (SPDT) • 3° max. Diff travel (DPDT) • 4° max. Overtravel • 60° min. Oper. torque • 0,45 Nm [4 in-lb] max.	5 conductor STOOW-A cable, 3,6 m [12.0 ft]	Figure 4	Standard switch
LSYUC3KQ-FP	Side rotary, standard torque with low pretravel	1NC/1NO		5-pin mini-style inte-gral male connector	Figure 5	Standard switch
LSYUC5KQ-FP	Side rotary, standard torque with low pretravel	1NC/1NO		5-pin mini-style inte-gral male connector	Figure 7	Standard switch with 120 Vac indicator
LSYUC4LX-FP	Side rotary, standard torque with low pretravel	2NC/2NO		9 conductor STOOW-A cable, 3,6m [12.0 ft]	Figure 8	Standard switch

Table 6. Order Guide: Side Rotary, continued

Side Rotary Catalog Listings	Actuator Head Type	Contact Arrange-ment (snap action)	Bar Chart (degrees) ■ Contact closed ☐ Contact open	Electrical Termination	Wiring Diagram	Note
LSYPC3KP-FP	Side rotary, standard torque with low differential	1NC/1NO	Pretravel • 9° max. Diff. travel (SPDT) • 3° max. Diff. travel (DPDT) • 4° max. Overtravel • 66° min. Oper. torque • 0,45 Nm [4 in-lb] max.	5 conductor STOOW-A cable, 3,6 m [12.0 ft]	Figure 4	Standard switch
LSYPB3KP-FP	Side rotary, standard torque with low differential	1NC/1NO		5 conductor STOOW-A cable, 3,6 m [12.0 ft]	Figure 4	Low temp. switch, cable not suitable for flexing
LSYPC3KQ-FP	Side rotary, standard torque with low differential	1NC/1NO		5-pin mini-style male connector	Figure 5	Standard switch
LSYPC4LX-FP	Side rotary, standard torque with low differential	2NC/2NO		9 conductor STOOW-A cable, 3,6 m [12.0 ft]	Figure 8	Standard switch
LSYRC3KP-FP	Side rotary, low torque with standard travel	1NC/1NO	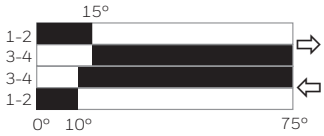 Pretravel • 15° max. Diff. travel (SPDT) • 5° max. Diff. travel (DPDT) • 7° max. Overtravel • 60° min. Oper. torque • 0,19 Nm [1.7 in-lb] max.	5 conductor STOOW-A cable, 3,6 m [12.0 ft]	Figure 4	Standard switch
LSYRB3KP-FP	Side rotary, low torque with standard travel	1NC/1NO		5 conductor STOOW-A cable, 3,6 m [12.0 ft]	Figure 4	Low temp. switch, cable not suitable for flexing
LSYRC5KP-FP	Side rotary, low torque with standard travel	1NC/1NO		5 conductor STOOW-A cable, 3,6 m [12.0 ft]	Figure 6	Standard switch with 120 Vac indicator
LSYRC5KQ-FP	Side rotary, low torque with standard travel	1NC/1NO	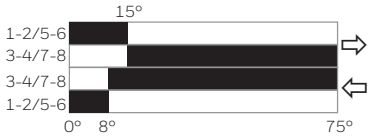	5-pin mini-style inte-gral male connector	Figure 7	Standard switch with 120 Vac indicator
LSYRC4LX-FP	Side rotary, low torque with standard travel	2NC/2NO		9 conductor STOOW-A cable, 3,6 m [12.0 ft]	Figure 8	Standard switch
LSYHC3KP-FP	Side rotary, low torque & low differential	1NC/1NO	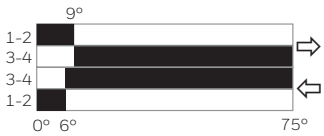 Pretravel • 9° max. Diff. travel (SPDT) • 3° max. Diff. travel (DPDT) • 4° max. Overtravel • 66° min. Oper. torque • 0,19 Nm [1.7 in-lb] max.	5 conductor STOOW-A cable, 3,6 m [12.0 ft]	Figure 4	Standard switch
LSYHC4LX-FP	Side rotary, low torque & low differential	2NC/2NO		9 conductor STOOW-A cable, 3,6 m [12.0 ft]	Figure 8	Standard switch

Table 6. Order Guide: Side Rotary, continued

Side Rotary Catalog Listings	Actuator Head Type	Contact Arrange-ment (snap action)	Bar Chart (degrees) ■ Contact closed ☐ Contact open	Electrical Termination	Wiring Diagram	Note
LSYLC4MX-FP	Side rotary sequential	2NC/2NO	Pretravel • 1st Pole 15° max.; 2nd Pole 10° add'l Diff. travel (each pole) • 5° max. Overtravel • 48° min. Oper. torque • 0,45 Nm [4 in-lb] max. 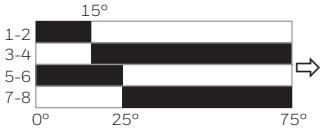	9 conductor STOOW-A cable, 3,6 m [12.0 ft]	Figure 10	Standard switch
LSYLB7MR-FP	Side rotary sequential	2NC/2NO		9-pin mini-style inte-gral male connectori	Figure 11	Low temp. switch
LSYMC4NX-FP	Side rotary, center neutral	2NC/2NO	Pretravel • 18° max. Diff. travel • 10° max. Overtravel • 57° min. Oper. torque • 0,45 Nm [4 in-lb] max. 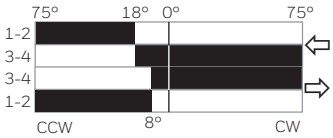	9 conductor STOOW-A cable, 3,6 m [12.0 ft]	Figure 12	Standard switch
LSYMB4NX-FP	Side rotary, center neutral	2NC/2NO		9 conductor STOOW-A cable, 3,6 m [12.0 ft]	Figure 12	Low temp. switch, cable not suitable for flexing
LSYMC7NR-FP	Side rotary, center neutral	2NC/2NO	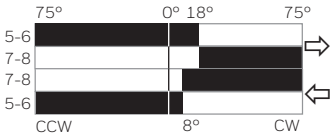	9-pin mini-style inte-gral male connector	Figure 13	Standard switch
LSYNC3KP-FP	Side rotary, maintained	1NC/1NO	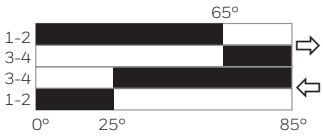	5 conductor STOOW-A cable, 3,6 m [12.0 ft]	Figure 4	Standard switch
LSYNB3KP-FP	Side rotary, maintained	1NC/1NO		5 conductor STOOW-A cable, 3,6 m [12.0 ft]	Figure 4	Low temp. switch, cable not suitable for flexing
LSYNC3KQ-FP	Side rotary, maintained	1NC/1NO	Pretravel • 65° max. Diff. travel • 40° max. Overtravel • 20° min. Oper. torque • 0,45 Nm [4 in-lb] max.	5-pin mini-style inte-gral male connector	Figure 5	Standard switch construction
LSYNC5KQ-FP	Side rotary, maintained	1NC/1NO		5-pin mini-style inte-gral male connector	Figure 7	Standard switch with 120 Vac indicator
LSYNC4LX-FP	Side rotary, maintained	2NC/2NO	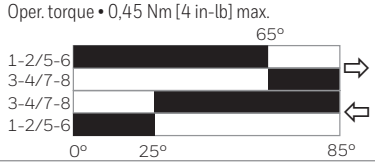	9 conductor STOOW-A cable, 3,6 m [12.0 ft]	Figure 8	Standard switch
LSYNB4LX-FP	Side rotary, maintained	2NC/2NO		9 conductor STOOW-A cable, 3,6 m [12.0 ft]	Figure 8	Low temp. switch, cable not suitable for flexing
LSYBC3KP-FP	Top rotary	1NC/1NO		5 conductor STOOW-A cable, 3,6 m [12.0 ft]	Figure 4	Standard switch
LSYBB3KP-FP	Top rotary	1NC/1NO		5 conductor STOOW-A cable, 3,6 m [12.0 ft]	Figure 4	Low temp.switch, cable not suitable for flexing
LSYBB5KP-FP	Top rotary	1NC/1NO	Pretravel • 25° max. Diff. travel (SPDT) • 10° max. Diff. travel (DPDT) • 12° max. Overtravel • 110° min. Oper. torque • 0,28 Nm [2.5 in-lb] max.	5 conductor STOOW-A cable, 3,6 m [12.0 ft]	Figure 6	Low temp. switch with 120 Vac indicator, cable not suitable for flexing
LSYBC3KQ-FP	Top rotary	1NC/1NO		5-pin mini-style inte-gral male connector	Figure 5	Standard switch
LSYBC5KP-FP	Top rotary	1NC/1NO	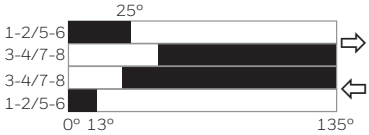	5 conductor STOOW-A cable, 3,6 m [12.0 ft]	Figure 6	Standard switch with 120 Vac indicator

MICRO SWITCH Heavy-Duty Limit Switch, Factory Sealed (LSY-FP Series)

Table 7. Order Guide: Top Plunger

Top Plunger Catalog Listings	Actuator Head Type	Contact Arrange-ment (snap action)	Bar Chart (mm [in]) ■ Contact closed ☐ Contact open	Electrical Termination	Wiring Diagram	Note
LSYCC3KP-FP	Top pin plunger	1NC/1NO	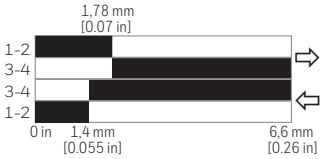 Pretravel • 1,78 mm [0.07 in] max. Diff. travel (SPDT) • 0,38 mm [0.015 in] max. Diff travel (DPDT) • 0,51 mm [0.020 in] max. Overtravel • 4,83 mm [0.190 in] min. Oper. point • 45,9 mm [1.81 in] Oper. force • 17,8 N [4 lb] max.	5 conductor STOOW-A cable, 3,6 m [12.0 ft]	Figure 4	Standard switch
LSYCC3KQ-FP	Top pin plunger	1NC/1NO		5-pin mini style integral male connector	Figure 5	Standard switch
LSYCB3KQ-FP	Top pin plunger	1NC/1NO		5-pin mini-style inte-gral male connector	Figure 5	Low temp. switch
LSYCC5KP-FP	Top pin plunger	1NC/1NO		5 conductor STOOW-A cable, 3,6 m [12.0 ft]	Figure 6	Standard switch with 120 Vac indicator
LSYCC4LX-FP	Top pin plunger	2NC/2NO		9 conductor STOOW-A cable, 3,6 m [12.0 ft]	Figure 8	Standard switch
LSYCB4SX-FP	Top pin plunger	2NC/2NO	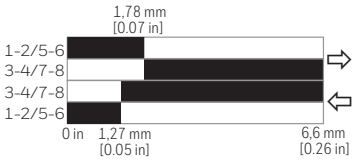	9 conductor STOOW-A cable, 3,6 m [12.0 ft]	Figure 8	Low temp. switch with gold contacts for low energy, cable not suitable for flex-ing,
LSYVC3KP-FP	Adjustable top pin plunger	1NC/1NO	Pretravel • 1,78 mm [0.07 in] max. Diff. travel (SPDT) • 0,38 mm [0.015 in] max. Diff travel (DPDT) • 0,51 mm [0.020 in] max. Overtravel • 4,83 mm [0.190 in] min. Oper. point • 53,0 to 59,3 mm [2.08 to 2.34 in] Oper. force • 17,8 N [4 lb] max.	5 conductor STOOW-A cable, 3,6 m [12.0 ft]	Figure 4	Standard switch
LSYVC3KQ-FP	Adjustable top pin plunger	1NC/1NO	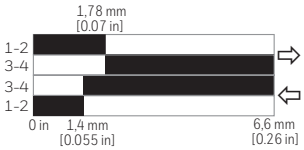	5-pin mini-style inte-gral male connector	Figure 5	Standard switch
LSYDC3KP-FP	Top roller plunger	1NC/1NO	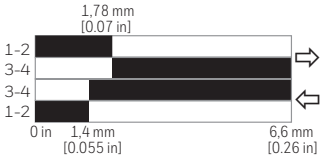 Pretravel • 1,78 mm [0.07 in] max. Diff. travel (SPDT) • 0,38 mm [0.015 in] max. Diff travel (DPDT) • 0,51 mm [0.020 in] max. Overtravel • 4,83 mm [0.190 in] min. Oper. point • 55,9 mm [2.20 in] Oper. force • 17,8 N [4 lb] max.	5 conductor STOOW-A cable, 3,6 m [12.0 ft]	Figure 4	Standard switch
LSYDC3KPC-FP	Top roller plunger	1NC/1NO		5 conductor STOOW-A cable, 6,1 M [20.0 ft.]	Figure 4	Standard switch
LSYDC9KP-FP	Top roller plunger	1NC/1NO		5 conductor STOOW-A cable, 3,6 m [12.0 ft]	Figure 6	Standard switch with 24 Vdc indicator
LSYDC3KQ-FP	Top roller plunger	1NC/1NO		5-pin mini-style inte-gral male connector	Figure 5	Standard switch
LSYDC5KQ-FP	Top roller plunger	1NC/1NO	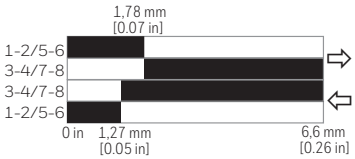	5-pin mini-style inte-gral male connector	Figure 7	Standard switch with 120 Vac indicator
LSYDC4LX-FP	Top roller plunger	2NC/2NO		9 conductor STOOW-A cable, 3,6 m [12.0 ft]	Figure 8	Standard switch

Table 8. Order Guide: Side Plunger

Side Plunger Catalog Listings	Actuator Head Type	Contact Arrange-ment (snap action)	Bar Chart (mm [in]) ■ Contact closed ☐ Contact open	Electrical Termination	Wiring Diagram	Note
LSYEC3KP-FP	Side pin plunger	1NC/1NO	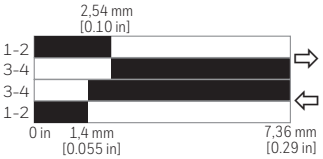 Pretravel • 2,54 mm [0.10 in] max. Diff. travel • 1,14 mm [0.045 in] max. Overtravel • 4,83 mm [0.190 in] min. Oper. point • 33,02 ±0,76 mm [1.30 ±0.030 in] Oper. force • 26,79 N [6 lb] max.	5 conductor STOOW-A cable, 3,6 m [12.0 ft]	Figure 4	Standard switch
LSYEC5KP-FP	Side pin plunger	1NC/1NO		5 conductor STOOW-A cable, 3,6 m [12.0 ft]	Figure 6	Standard switch with 120 Vac indicator
LSYEC3KQ-FP	Side pin plunger	1NC/1NO		5-pin mini-style integral male connector	Figure 5	Standard switch
LSYEC4LX-FP	Side pin plunger	2NC/2NO	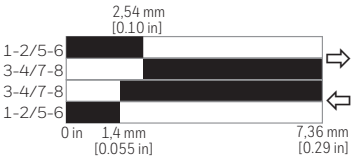	9 conductor STOOW-A cable, 3,6 m [12.0 ft]	Figure 8	Standard switch
LSYWC3KP-FP	Adjustable side pin plunger	1NC/1NO	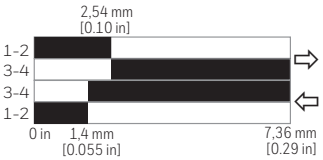 Pretravel • 2,54 mm [0.10 in] max. Diff. travel • 1,14 mm [0.045 in] max. Overtravel • 4,83 mm [0.190 in] min. Oper. point • Adjustable from 41,0 to 47,4 mm [1.62 to 1.87 in] Oper. force • 26,79 N [6 lb] max.	5 conductor STOOW-A cable, 3,6 m [12.0 ft]	Figure 4	Standard switch
LSYWB3KQ-FP	Adjustable side pin plunger	1NC/1NO		5-pin mini-style integral male connector	Figure 5	Low temp. switch
LSYWC5KQ-FP	Adjustable side pin plunger	1NC/1NO	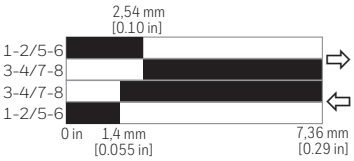	5-pin mini-style integral male connector	Figure 7	Standard switch with 120 Vac indicator
LSYGC3KP-FP	Maintained side pin plunger	1NC/1NO	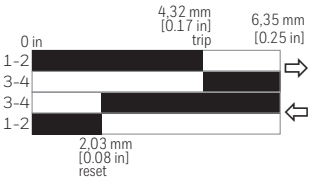 Pretravel • 4,32 mm [0.17 in] max. Diff. travel • 2,29 mm [0.09 in] max. Overtravel • 2,03 mm [0.08 in] min. Oper. point • 33,59 mm ±0,76 mm [1.48 in ±0.03 in] Oper. force • 44,5 N [10 lb] max.	5 conductor STOOW-A cable, 3,6 m [12.0 ft]	Figure 4	Standard switch

Table 8. Order Guide: Side Plunger, continued

Side Plunger Catalog Listings	Actuator Head Type	Contact Arrange-ment (snap action)	Bar Chart (mm [in]) ■ Contact closed ☐ Contact open	Electrical Termination	Wiring Diagram	Note
LSYFC3KP-FP	Side roller plunger	1NC/1NO	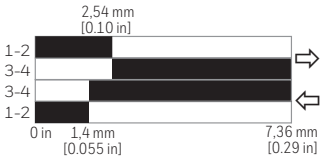 Pretravel • 2,54 mm [0.10 in] max. Diff. travel • 1,14 mm [0.045 in] max. Overtravel • 4,83 mm [0.190 in] min. Oper. point • 44,07 ±1,02 mm [1.735 in ±0.040] Oper. force • 26,79 N [6 lb] max.	5 conductor STOOW-A cable, 3,6 m [12.0 ft]	Figure 4	Standard switch
LSYFC3KQ-FP	Side roller plunger	1NC/1NO		5-pin mini-style integral male connector	Figure 5	Standard switch
LSYFC5KQ-FP	Side roller plunger	1NC/1NO		5-pin mini-style integral male connector	Figure 7	Standard switch with 120 Vac indicator
LSYFB4LX-FP	Side roller plunger	2NC/2NO	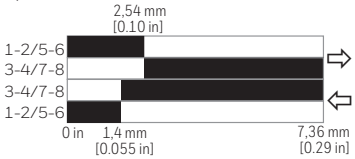	9 conductor STOOW-A cable, 3,6 m [12.0 ft]	Figure 8	Low temp. switch, cable not suitable for flexing

Table 9. Order Guide: Wobble

Wobble Catalog Listings	Actuator Head Type	Contact Arrange-ment (snap action)	Bar Chart (degrees) ■ Contact closed ☐ Contact open	Electrical Termination	Wiring Diagram	Note
LSYJC3KP-7AFP	140 mm [5.5 in] plastic rod wobble	1NC/1NO	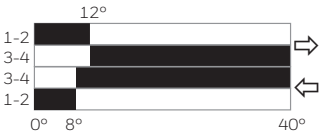 Actuator length • 140 mm [5.5 in] Pretravel • 25,4 mm [1.0 in] max. Oper. force • 2,8 N [10 oz] max.	5 conductor STOOW-A cable, 3,6 m [12.0 ft]	Figure 4	Standard switch
LSYJC3KQ-7AFP	140 mm [5.5 in] plastic rod wobble	1NC/1NO		5-pin mini-style integral male connector	Figure 5	Standard switch
LSYJB4LX-7AFP	140 mm [5.5 in] plastic rod wobble	2NC/2NO		9 conductor STOOW-A cable, 3,6 m [12.0 ft]	Figure 8	Low temp. switch, cable not suitable for flexing
LSYJC3KP-7MFP	330 mm [13.0 in] spring wire wobble	1NC/1NO	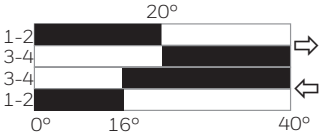 Actuator length • 330 mm [13 in] Pretravel • 102 mm [4.0 in] max. Oper. force • 1,39 Nm [5 oz] max.	5 conductor STOOW-A cable, 3,6 m [12.0 ft]	Figure 4	Standard switch
LSYJC3KQ-7MFP	330 mm [13.0 in] spring wire wobble	1NC/1NO		5-pin mini-style integral male connector	Figure 5	Standard switch
LSYJB3KQ-7MFP	330 mm [13.0 in] spring wire wobble	1NC/1NO		5-pin mini-style integral male connector	Figure 5	Low temp. switch
LSYJC5KQ-7MFP	330 mm [13.0 in] spring wire wobble	1NC/1NO	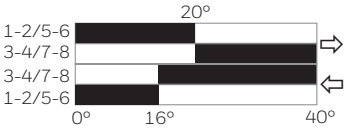	5-pin mini-style integral male connector	Figure 7	Standard switch with 120 Vac indicator
LSYJC7LR-7MFP	330 mm [13.0 in] spring wire wobble	2NC/2NO		9-pin mini-style integral male connector	Figure 9	Standard switch
LSYKC7LR-8AFP	140 mm [5.5 in] cat whisker wobble	2NC/2NO	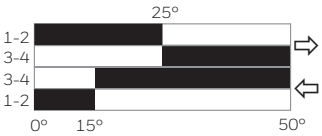 Actuator length • 190 mm [7.5 in] Pretravel • 50,8 mm [2.0 in] max. Oper. force • 1,4 N [5 oz] max.	9-pin mini-style integral male connector	Figure 9	Standard switch
LSYKC5KQ-8BFP	190 mm [7.5 in] cat whisker wobble	1NC/1NO	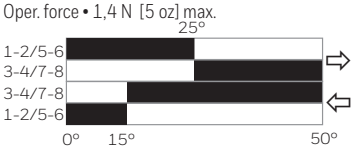	5-pin mini-style integral male connector	Figure 5	Standard switch with 120 Vac indicator
LSYKC3KQ-8CFP	140 mm [5.5 in] coil spring wobble	1NC/1NO	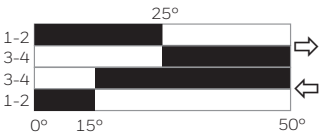 Actuator length • 140 mm [5.5 in] Pretravel • 50,8 mm [2.0 in] max. Oper. force • 1,95 Nm [7 oz] max. 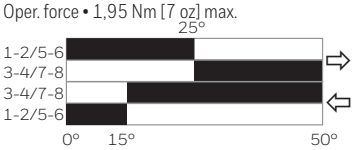	5-pin mini-style integral male connector	Figure 5	Standard switch construction

Table 10. Common levers for use with MICRO SWITCH HDLS Rotary Switches

Levers for use with side or top rotary actuated switches are available in a wide choice of sizes and materials. The most common listings are shown below. Rollers may be on either side of the lever to best match the external acutating mechanism.

LSZ51A&C fixed rotary lever, nylon roller, front/back	**LSZ51B&D** fixed rotary lever, steel roller, front/back	**LSZ59A,LSZ59B, LSZ59C,LSZ59D** short fixed lever, front/back			**LSZ69CA** spoke lever - 152 mm [6 in]		
		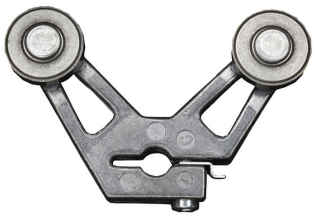					
LSZ55A,LSZ55B, LSZ55C,LSZ55D offset lever, front/back	**LSZ60** one-way roller lever	**LSZ53A, LSZ53B, LSZ53D** yoke lever, nylon and steel rollers, front/back placement		**LSZ54R** spring wire 305 mm [12 in]			
		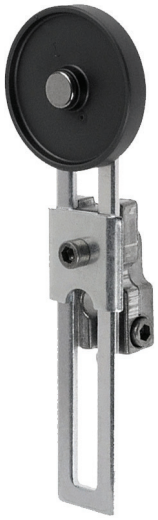					
LSZ52A, LSZ52B, LSZ52C, LSZ52D adj. lever, nylon/ steel, front/back	**LSZ52J** adjustable lever, nylon roller Ø 25,4 mm [Ø 1 in]	**LSZ52K** adjustable lever, nylon roller Ø 38,1 mm [Ø 1.5 in]	**LSZ54M** aluminum rod Ø 140 mm [Ø 5.5 in]	**LSZ61** loop 152 mm [6 in]	**LSZ67AA*** Plastic conveyor roller	**LSZ68** plastric rod w/ spring 305 mm [12 in]	**LSZ54N** stainless steel rod 330 mm [13 in]

* May require orientation of switch and lever to enable gravity to help restore free position of switch.

MICRO SWITCH Heavy-Duty Limit Switch, Factory Sealed (LSY-FP Series)

Table 11. HDLS Series Actuator Code Table (see previous page)

	Catalog Listing	Material	Rod/Roller Dia. mm [in]	Rod/Roller Width mm [in]	Roller Mounting
	Fixed 38,1 mm [1.5 in] radius				
	–	Rollerless	n/a	n/a	n/a
	LSZ51A	Nylon	19 [0.75]	6,35 [0.25]	Front
	LSZ51B	Steel	19 [0.75]	6,35 [0.25]	Front
	LSZ51C	Nylon	19 [0.75]	6,35 [0.25]	Back
	LSZ51D	Steel	19 [0.75]	6,35 [0.25]	Back
	LSZ51F	Nylon	25,4 [1.0]	12,7 [0.50]	Front
	LSZ51G	Nylon	38,1 [1.5]	6,35 [0.25]	Front
	LSZ51J	Nylon	25,4 [1.0]	12,7 [0.50]	Back
	LSZ51L	Ball bearing	19 [0.75]	6,35 [0.25]	Back
	LSZ51M	Nylon	19 [0.75]	31,7 [1.25]	Back
	LSZ51N	Steel	19 [0.75]	31,7 [1.25]	Front
	LSZ51P	Nylon	19 [0.75]	12,7 [0.50]	Front
	Adjustable 38,1 mm to 89,0 mm [1.5 in to 3.5 in] radius				
	–	Rollerless	n/a	n/a	n/a
	LSZ52A	Nylon	19 [0.75]	6,35 [0.25]	Back
	LSZ52B	Steel	19 [0.75]	6,35 [0.25]	Back
	LSZ52C	Nylon	19 [0.75]	6,35 [0.25]	Front
	LSZ52D	Steel	19 [0.75]	6,35 [0.25]	Front
	LSZ52E	Nylon	19 [0.75]	33,0 [1.30]	Front
	LSZ52J	Nylon	25,4 [1.0]	12,7 [0.50]	Front
	LSZ52K	Nylon	38,1 [1.5]	6,35 [0.25]	Front
	LSZ52L	Ball bearing	19 [0.75]	6,35 [0.25]	Front
	LSZ52M	Nylon	50,8 [2.0]	6,35 [0.25]	Front
	LSZ52N	Nylon	19 [0.75]	12,7 [0.50]	Front
	Yoke – 38,1 mm [1.5 in] radius				
	LSZ53A	Nylon	19 [0.75]	6,35 [0.25]	Front/Back
	LSZ53B	Steel	19 [0.75]	6,35 [0.25]	Front/Back
	LSZ53D	Steel	19 [0.75]	6,35 [0.25]	Front/Front
	LSZ53E	Nylon	19 [0.75]	6,35 [0.25]	Back/Front
	LSZ53M	Nylon	19 [0.75]	31,7 [1.25]	Back/Front
	LSZ53P	Steel	19 [0.75]	6,35 [0.25]	Back/Back
	LSZ53S	Nylon	19 [0.75]	6,35 [0.25]	Back/Back
	Rod				
	–	Hub only	n/a	n/a	n/a
	LSZ54M	Alum, 140 mm [5.5 in]	Ø 3,2 [Ø 0.125]	n/a	n/a
	LSZ54N	Stainless, 330 mm [13 in]	Ø 3,2 [Ø 0.125]	n/a	n/a
	LSZ54R	SST spring wire, 305 mm [12 in]	Ø 1,9 [Ø 0.075]	n/a	n/a
	LSZ54V	Flex cable (tin plated steel), 122 mm [4.8 in]	Ø 4,8 [Ø 0.19]	n/a	n/a
	LSZ54P	Plastic rod, 533,4 mm [21 in]	Ø 6,85 [Ø 0.27]	n/a	n/a
	LSZ54W	Plastic rod, 183 mm [7.2 in]	Ø 6,85 [Ø 0.27]	n/a	n/a
	LSZ54T	330 mm [13 in] stainless steel	Ø 4,8 [Ø 0.19]	n/a	n/a
	Spoke				
	LSZ69CA	152 mm [6.0 in] Stainless	3,2 [0.125]	n/a	n/a

	Catalog Listing	Material	Rod/Roller Dia. mm [in]	Rod/Roller Width mm [in]	Roller Mounting
	Fixed 38,1 mm [1.5 in] radius				
	–	Rollerless	n/a	n/a	n/a
	LSZ55A	Nylon	19 [0.75]	6,35 [0.25]	Back
	LSZ55B	Steel	19 [0.75]	6,35 [0.25]	Back
	LSZ55C	Nylon	19 [0.75]	6,35 [0.25]	Front
	LSZ55D	Steel	19 [0.75]	6,35 [0.25]	Front
	LSZ55E	Nylon	19 [0.75]	12,7 [0.50]	Front
	LSZ55K	Nylon	38,1 [1.5]	6,35 [0.25]	Front
	Short fixed - 33 mm [1.3 in] radius				
	LSZ59A	Nylon	19 [0.75]	6,35 [0.25]	Front
	LSZ59B	Steel	19 [0.75]	6,35 [0.25]	Front
	LSZ59C	Nylon	19 [0.75]	6,35 [0.25]	Back
	LSZ59D	Steel	19 [0.75]	6,35 [0.25]	Back
	38,1 mm [1.5 in] radius one-way roller lever				
	LSZ60A	Nylon	19 [0.75]	6,35 [0.25]	Front
	LSZ60B	Steel	19 [0.75]	6,35 [0.25]	Front
	Flexible loop				
	LSZ61	Ø 4,8 [Ø 0.19] Plastic	152 mm [6 in] flexible loop		
	LSZ618	Ø 4,8 [Ø 0.19] Plastic	241 mm [9.5 in] flexible loop		
	LSZ54	Hub only	n/a	n/a	n/a
	Spring rod				
	LSZ68	Delrin rod, 305 mm [12 in]	Ø 6,35 [Ø 0.25]	n/a	n/a
	LSZ617	Delrin rod, 406 mm [16 in]	Ø 6,35 [Ø 0.25]	n/a	n/a
	LSZ686	Delrin rod, 152 mm [6 in]	Ø 6,35 [Ø 0.25]	n/a	n/a
	Rubber roller levers				
	LSZ51Y 38,1 mm [1.5 in] radius (std.)	Rubber	50 [2.0]	12,7 [0.50]	front
	LSZ55Y 38,1 mm [1.5 in] radius (offset)	Rubber	50 [2.0]	12,7 [0.50]	front
	LSZ52Y 38,1 mm to 89,0 mm [1.5 in to 3.5 in] radius (adjustable)	Rubber	50 [2.0]	12,7 [0.50]	front
	Plastic roller levers				
	LSZ67AA* (conveyor)	Plastic	38,1 [1.5]	96,5 [3.8]	n/a

* may require orientation of switch and lever to enable gravity to help restore free position of switch.

MICRO SWITCH HDLS Side Rotary Levers' Cam Tracking

Levers for side and top rotary switches are normally ordered as separate catalog listings. They also may be ordered by including a suffix to the switch catalog listing (see nomenclature tree in this document) and adding the lever price.

Figure 14. LSZ51 Type Levers Cam Tracking

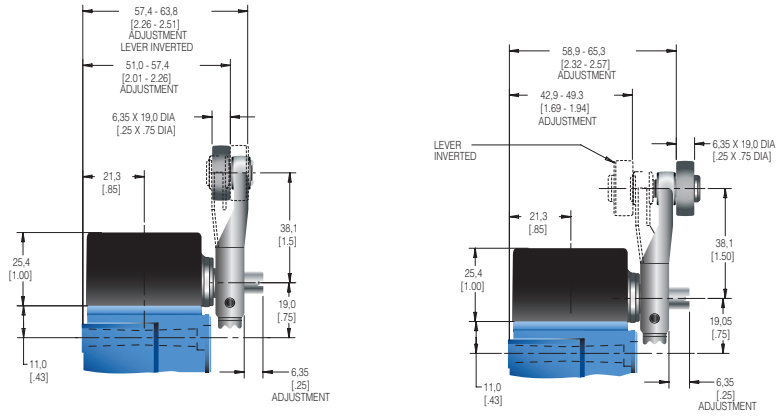

Figure 15. LSZ52 Type Levers Cam Tracking

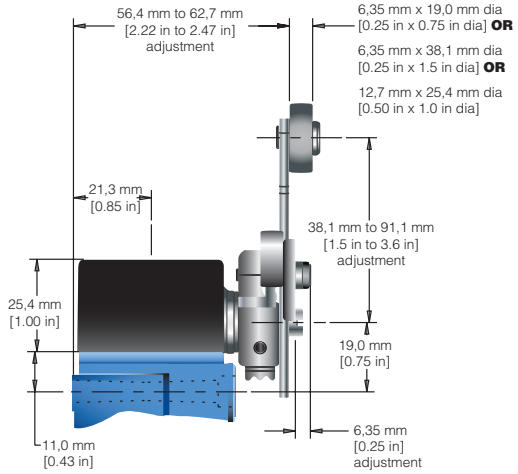

Figure 16. LSZ54 Type Levers Cam Tracking

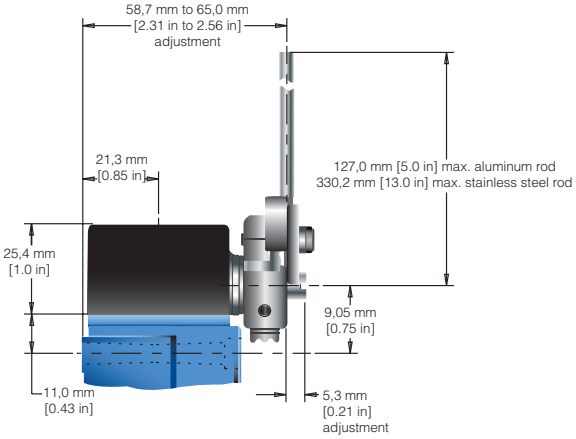

Figure 17. LSZ55 Type Levers Cam Tracking

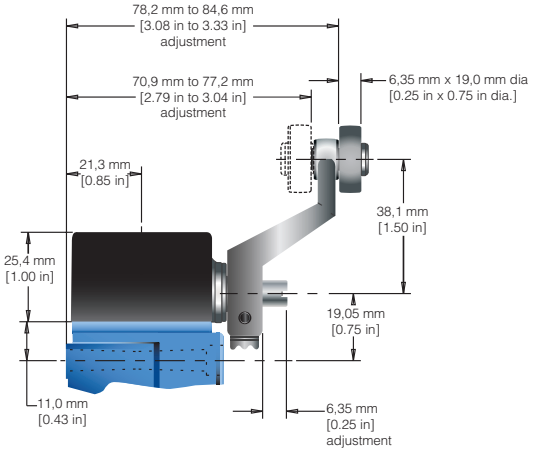

Figure 18. LSYA Side Rotary SPDT (mm[in])

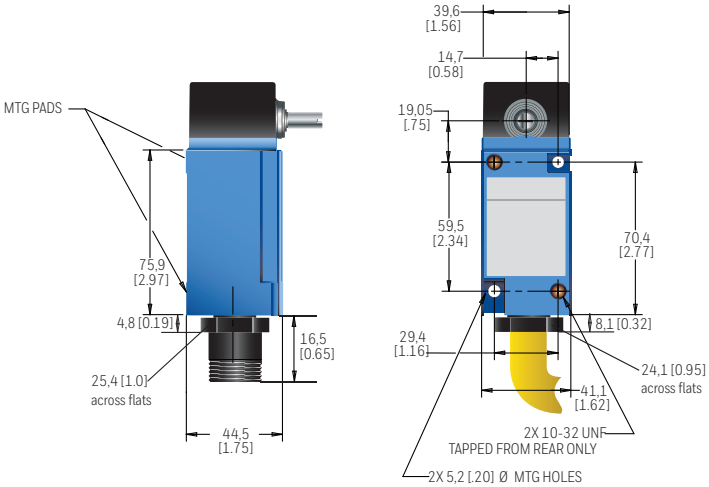

Figure 19. LSYA Side Rotary DPDT (mm[in])

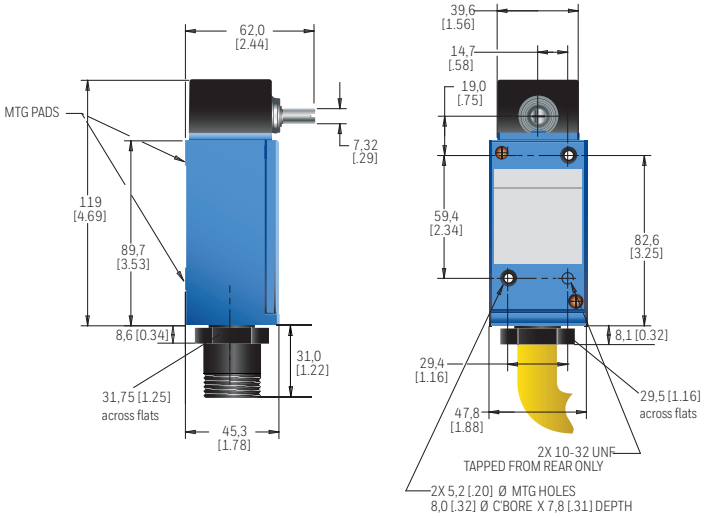

Figure 20. LSYC Top Pin Plunger SPDT (mm[in])

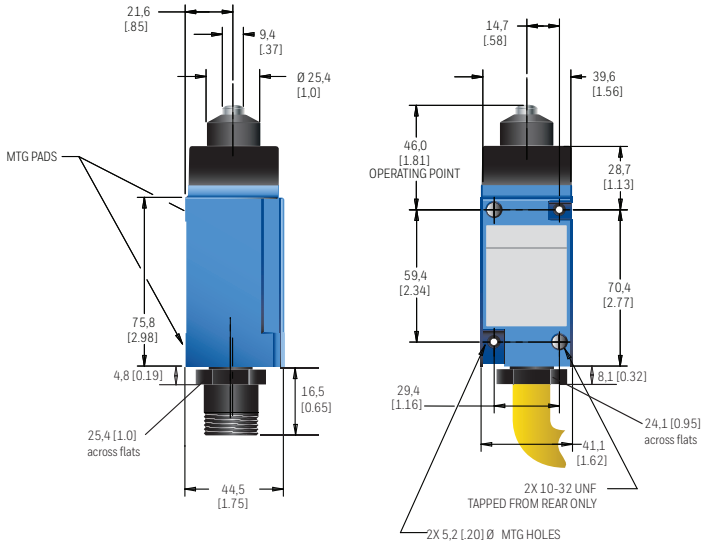

Figure 21. LSYC Top Pin Plunger DPDT (mm[in])

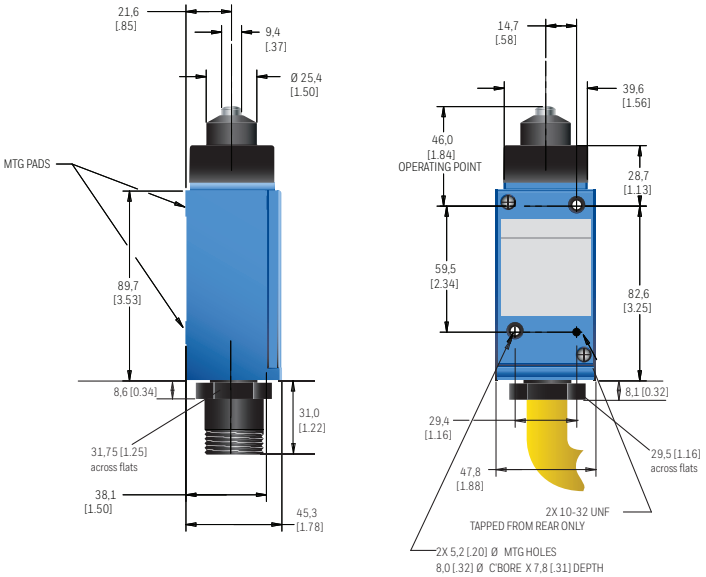

Figure 22. LSYD Top Roller Plunger SPDT (mm[in])

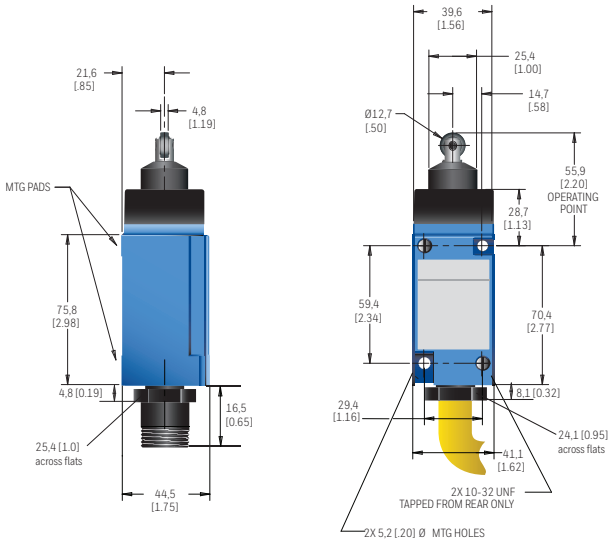

Figure 23. LSYD Top Roller Plunger DPDT (mm[in])

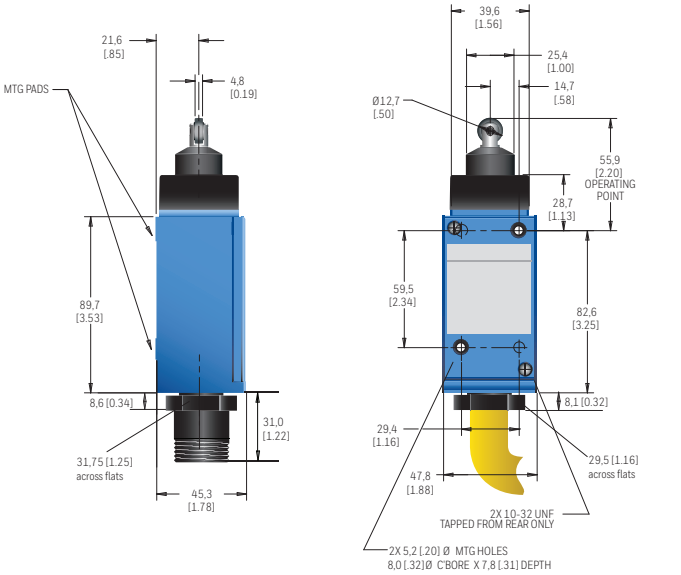

Figure 24. LSYE Side Pin Plunger SPDT (mm[in])

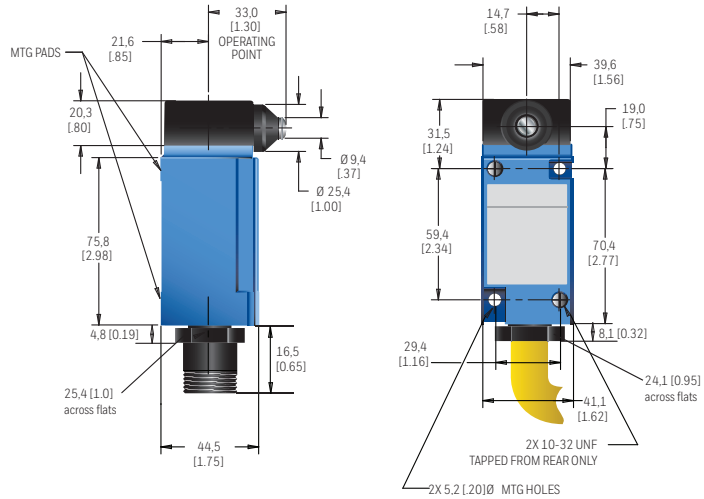

Figure 25. LSYE Side Pin Plunger DPDT (mm[in])

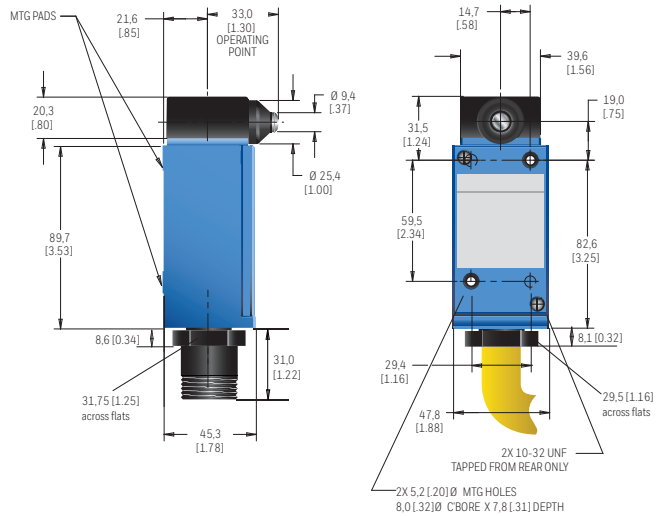

Figure 26. LSYF Side Roller Plunger SPDT (mm[in])

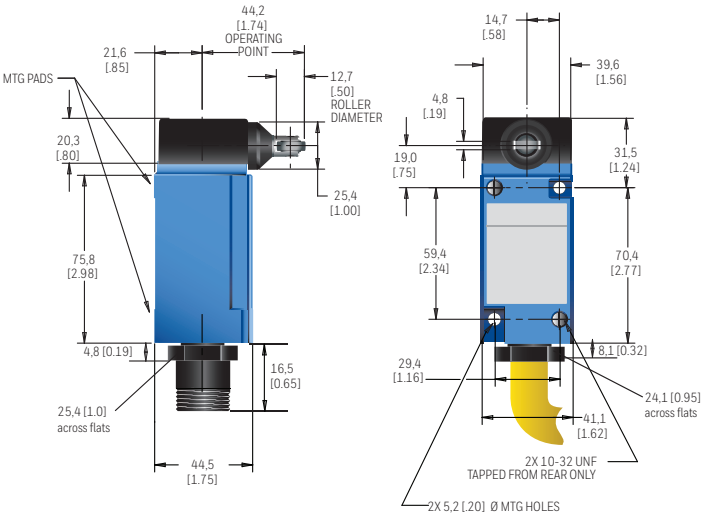

Figure 27. LSYF Side Roller Plunger DPDT (mm[in])

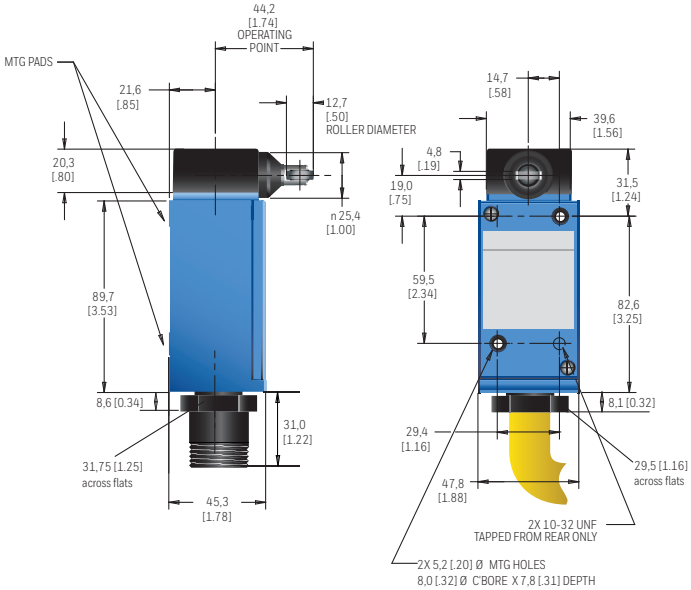

Figure 28. LSYG Side Pin Plunger (maintained) SPDT (mm[in])

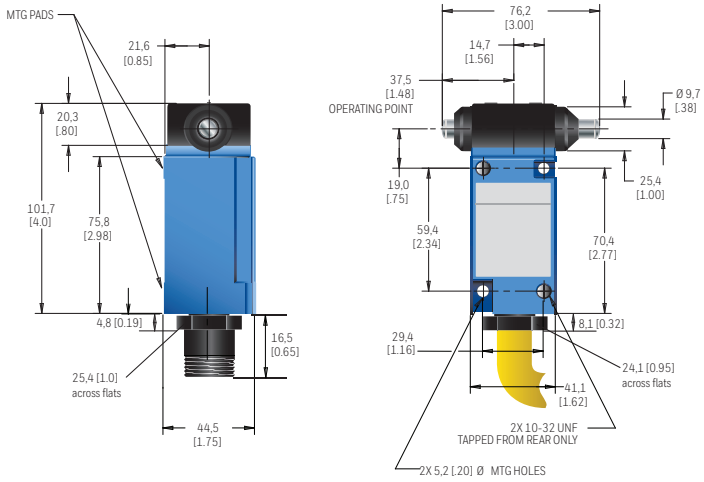

Figure 29. LSYG Side Pin Plunger (maintained) DPDT (mm[in])

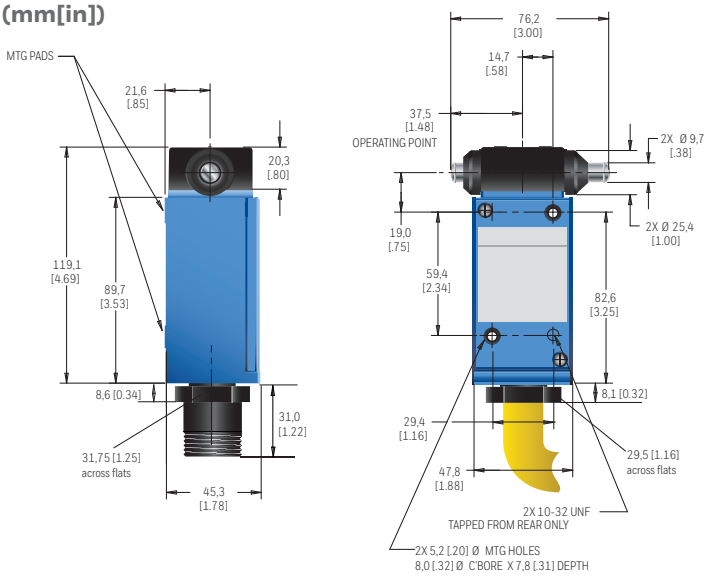

Figure 30. LSYJ7A 140 mm Plastic Wobble SPDT (mm[in])

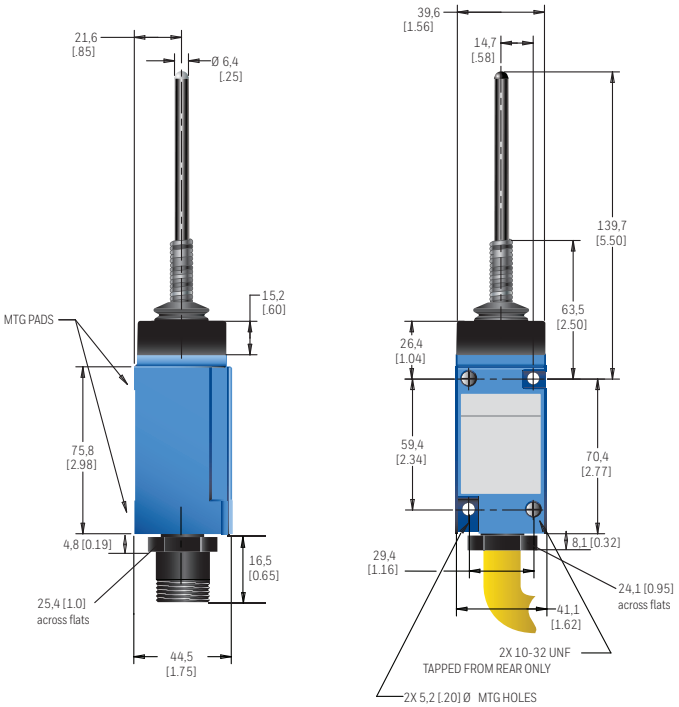

Figure 31. LSYJ7A 140 mm Plastic Wobble DPDT (mm[in])

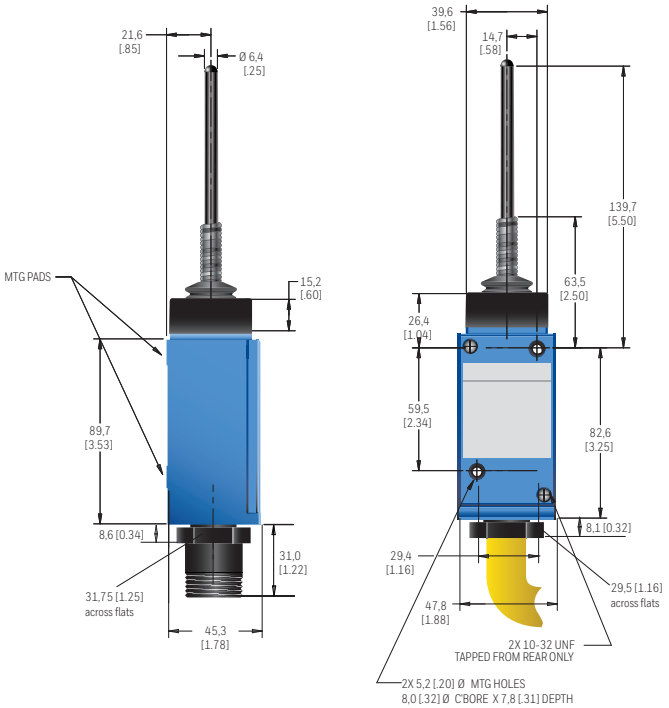

Figure 32. LSYJ7M 330 mm Spring Wire Wobble SPDT (mm[in])

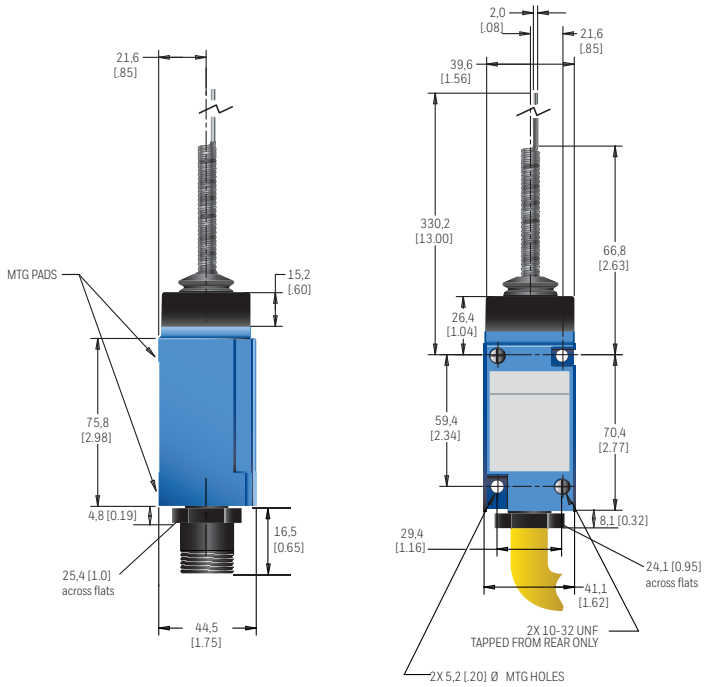

Figure 33. LSYJ7M 330 mm Spring Wire Wobble DPDT (mm[in])

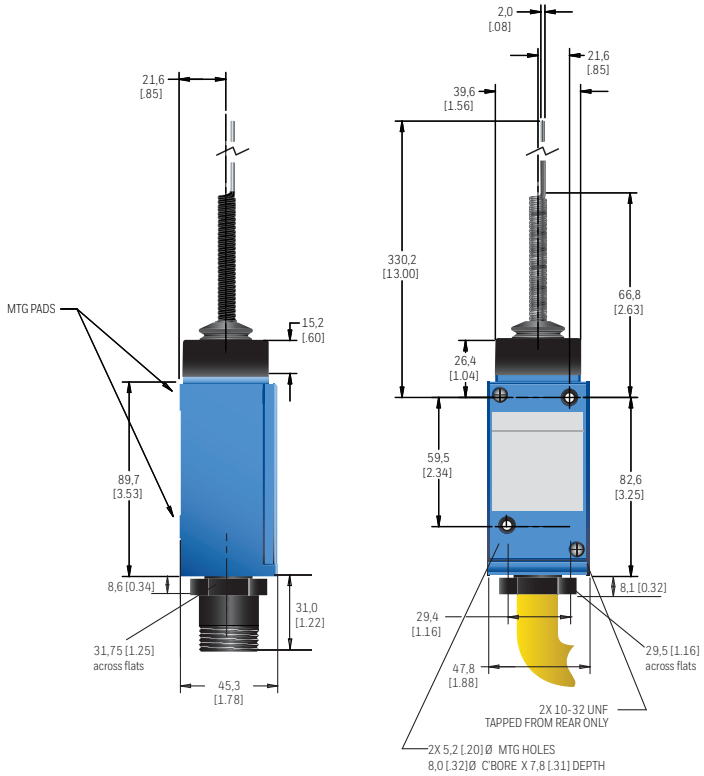

Figure 34. LSYJ7N 140 mm Flexible Cable Wobble SPDT (mm[in])

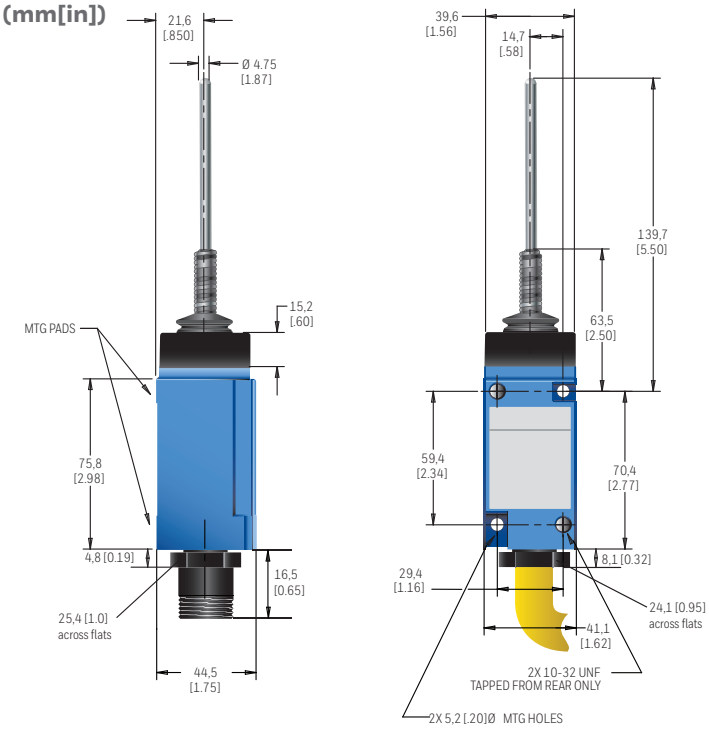

Figure 35. LSYJ7N 140 mm Flexible Cable Wobble DPDT (mm[in])

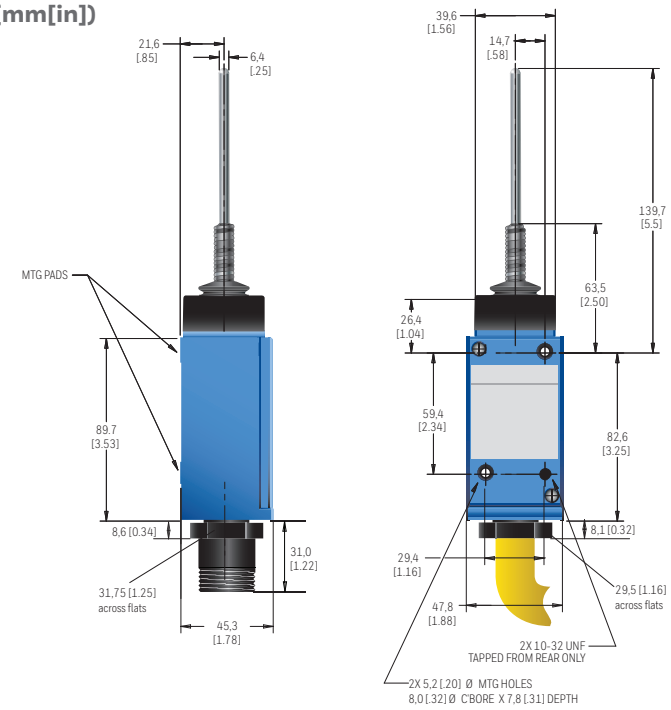

Figure 36. LSYJ8A 140 mm 140 mm Cat Whisker Wobble SPDT (mm[in])

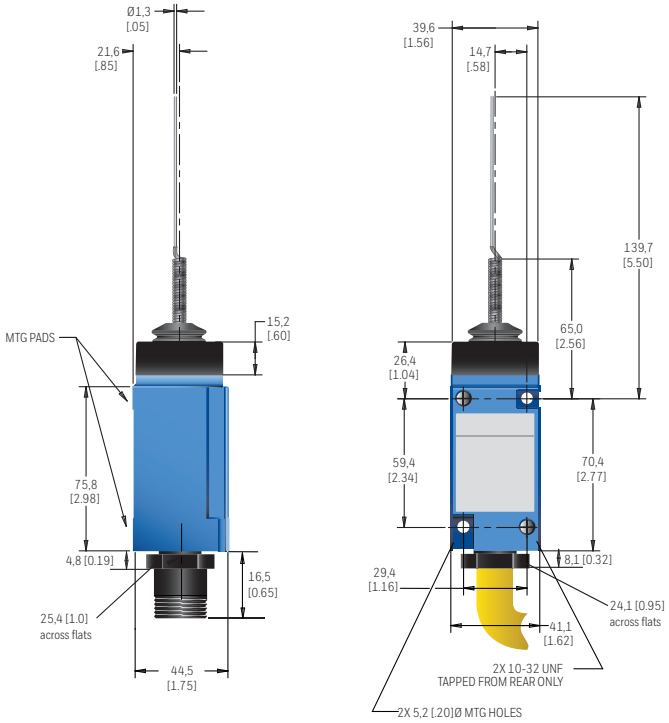

Figure 37. LSYJ8A 140 mm 140 mm Cat Whisker Wobble DPDT (mm[in])

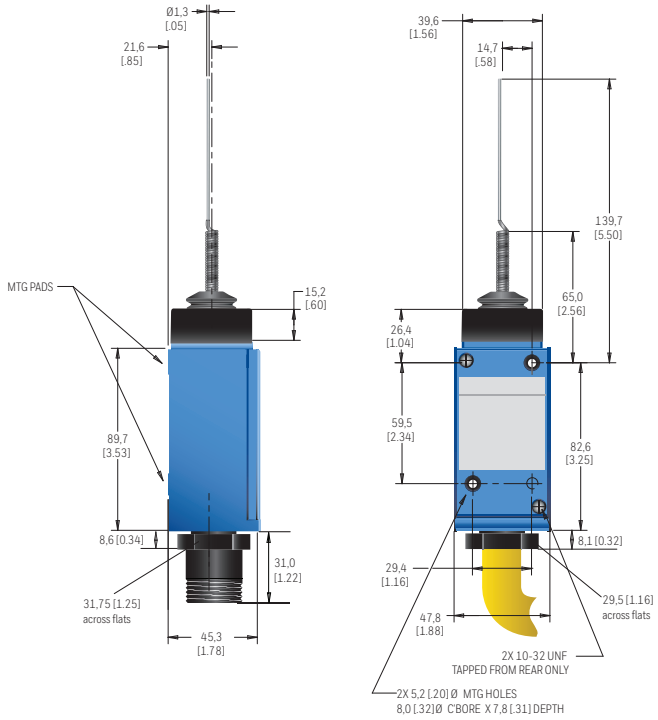

Figure 38. LSYJ8C 140 mm Coil Spring Wobble SPDT (mm[in])

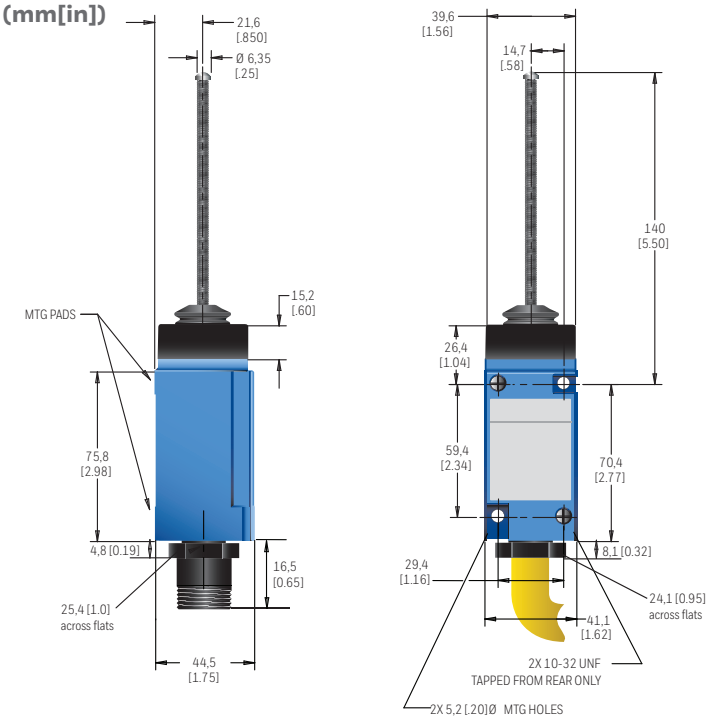

Figure 39. LSYJ8C 140 mm Coil Spring Wobble DPDT (mm[in])

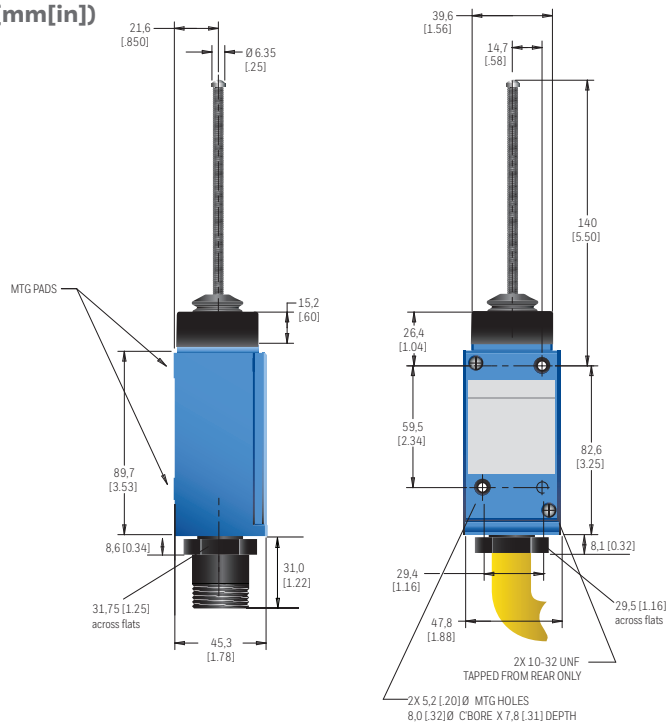

Figure 40. LSYV Top Adjustable Plunger (Momentary) SPDT (mm[in])

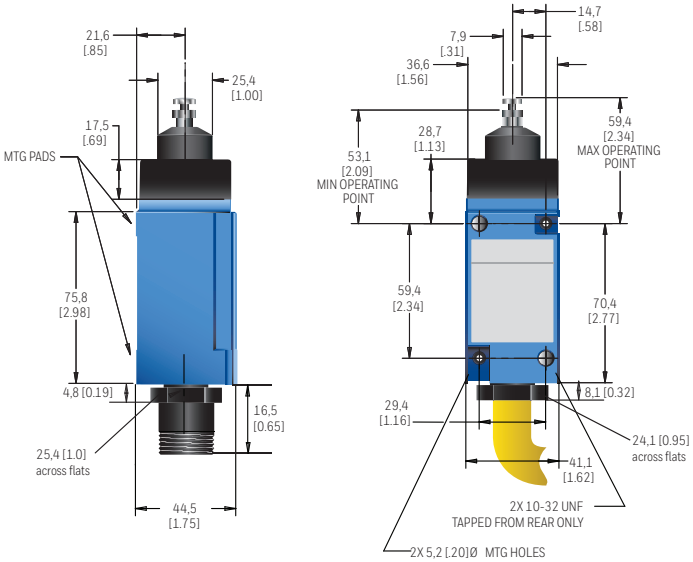

Figure 41. LSYV Top Adjustable Plunger (Momentary) DPDT (mm[in])

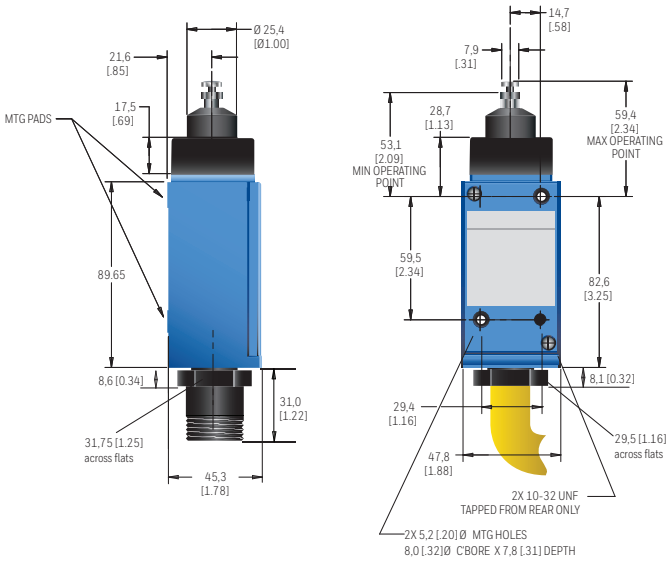

Figure 42. LSYW Side Adjustable Plunger (Momentary) SPDT (mm[in])

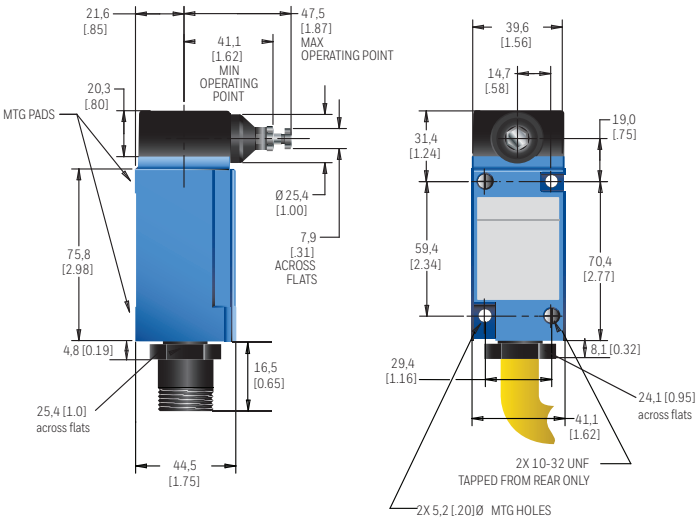

Figure 43. LSYW Side Adjustable Plunger (Momentary) DPDT (mm[in])

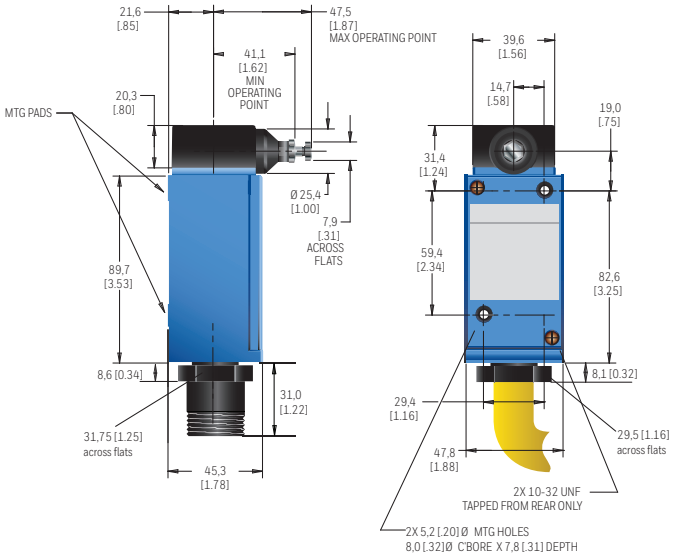

Table 5. Replacement Actuating heads for LSY-FP factory sealed limit switches

Catalog Listing	Actuating Head Type	Description
LSZ1AC	Side rotary, standard torque & standard travel	Replacement head for the LSYAC__ Series side rotary limit switch with fluorocarbon seals
LSZ1AB	Side rotary, standard torque & standard travel w/ low temp. seals	Replacement head for the LSYAB__ Series side rotary limit switch with fluorosilicone seals
LSZ1UC	Side rotary, standard torque & low pretravel	Replacement head for the LSYUC__ Series side rotary limit switch with fluorocarbon seals
LSZ1UB	Side rotary, standard torque & low pretravel w/ low temp. seals	Replacement head for the LSYUB__ Series side rotary limit switch with fluorosilicone seals
LSZ1PC	Side rotary, standard torque & low differential	Replacement head for the LSYPC__ Series side rotary limit switch with fluorocarbon seals
LSZ1PB	Side rotary, standard torque & low differential w/ low temp. seals	Replacement head for the LSYPB__ Series side rotary limit switch with fluorosilicone seals
LSZ1RC	Side rotary, low torque & standard travel	Replacement head for the LSYRC__ Series side rotary limit switch with fluorocarbon seals
LSZ1RB	Side rotary, low torque & standard travel w/ low temp. seals	Replacement head for the LSYRB__ Series side rotary limit switch with fluorosilicone seals
LSZ1HC	Side rotary, low torque & low differential	Replacement head for the LSYHC__ Series side rotary limit switch with fluorocarbon seals
LSZ1HB	Side rotary, low torque & low differential w/ low temp. seals	Replacement head for the LSYHB__ Series side rotary limit switch with fluorosilicone seals
LSZ1LC	Side rotary, standard torque w/ sequential action	Replacement head for the LSYLC__ Series side rotary limit switch with fluorocarbon seals
LSZ1LB	Side rotary, standard torque w/ sequential action & low temp. seals	Replacement head for the LSYLB__ Series side rotary limit switch with fluorosilicone seals
LSZ1MC	Side rotary, standard torque w/ center neutral action	Replacement head for the LSYMC__ Series side rotary limit switch with fluorocarbon seals
LSZ1MB	Side rotary, standard torque w/ center neutral action & low temp. seals	Replacement head for the LSYMB__ Series side rotary limit switch with fluorosilicone seals
LSZ1NC	Side rotary, two position maintained	Replacement head for the LSYNC__ Series side rotary limit switch with fluorocarbon seals
LSZ1NB	Side rotary, two position maintained w/ low temp. seals	Replacement head for the LSYNB__ Series side rotary limit switch with fluorosilicone seals
LSZ1BC	Top rotary, high overtravel	Replacement head for the LSYBC__ Series top rotary limit switch with fluorocarbon seals
LSZ1BB	Top rotary, high overtravel w/ low temp. seals	Replacement head for the LSYBB__ Series top rotary limit switch with fluorosilicone seals
LSZ1CC	Top pin plunger	Replacement head for the LSYCC__ Series top pin plunger limit switch with fluorocarbon seals
LSZ1CB	Top pin plunger w/ low temp. seals	Replacement head for the LSYCB__ Series top pin plunger limit switch with fluorosilicone seals
LSZ1VC	Adjustable top pin plunger	Replacement head for the LSYVC__ Series adjustable top pin plunger limit switch with fluorocarbon seals
LSZ1VB	Adjustable top pin plunger w/ low temp. seals	Replacement head for the LSYVB__ Series adjustable top pin plunger limit switch with fluorosilicone seals
LSZ1DC	Top roller plunger	Replacement head for the LSYDC__ Series top roller plunger limit switch with fluorocarbon seals
LSZ1DB	Top roller plunger w/ low temp. seals	Replacement head for the LSYDB__ Series top roller plunger limit switch with fluorosilicone seals
LSZ1EC	Side pin plunger	Replacement head for the LSYEC__ Series side pin plunger limit switch with fluorocarbon seals
LSZ1EB	Side pin plunger w/ low temp. seals	Replacement head for the LSYEB__ Series side pin plunger limit switch with fluorosilicone seals
LSZ1WC	Adjustable side pin plunger	Replacement head for the LSYWC__ Series adjustable side pin plunger limit switch with fluorocarbon seals
LSZ1WB	Adjustable side pin plunger w/ low temp. seals	Replacement head for the LSYWB__ Series adjustable side pin plunger limit switch with fluorosilicone seals
LSZ1FC	Side roller plunger	Replacement head for the LSYFC__ Series side roller plunger limit switch with fluorocarbon seals
LSZ1FB	Side roller plunger w/ low temp. seals	Replacement head for the LSYFB__ Series side roller plunger limit switch with fluorosilicone seals
LSZ1GC	Side pin plunger, maintained	Replacement head for the LSYGC__ Series maintained side pin plunger limit switch with fluorocarbon seals
LSZ1GB	Side pin plunger, maintained w/ low temp. seals	Replacement head for the LSYGB__ Series maintained side pin plunger limit switch with fluorosilicone seals
LSZ1JCGA	140 mm [5.5 in] plastic rod wobble	Replacement head with actuator for the LSYJC__7A Series plastic rod wobble actuated limit switch with fluorocarbon seals
LSZ1JBGA	140 mm [5.5 in] plastic rod wobble w/ low temp. seals	Replacement head with actuator for the LSYJB__7A Series plastic rod wobble actuated limit switch with fluorosilicone seals
LSZ1JCGM	330 mm [13.0 in] spring wire wobble	Replacement head with actuator for the LSYJC__7M Series spring wire wobble actuated limit switch with fluorocarbon seals
LSZ1JBGM	330 mm [13.0 in] spring wire wobble w/ low temp. seals	Replacement head with actuator for the LSYJB__7M Series spring wire wobble actuated limit switch with fluorosilicone seals
LSZ1JCGN	140 mm [5.5 in] flexible cable wobble	Replacement head with actuator for the LSYJC__7N Series flexible cable wobble actuated limit switch with fluorocarbon seals
LSZ1JBGN	140 mm [5.5 in] flexible cable wobble w/ low temp. seals	Replacement head with actuator for the LSYJB__7NSeries flexible cable wobble actuated limit switch with fluorosilicone seals
LSZ1KCHA	140 mm [5.5 in] cat whisker wobble	Replacement head with actuator for the LSYKC__8A Series cat whisker wobble actuated limit switch with fluorocarbon seals
LSZ1KBHA	140 mm [5.5 in] cat whisker wobble w/ low temp. seals	Replacement head with actuator for the LSYKB__8A Series cat whisker wobble actuated limit switch with fluorosilicone seals
LSZ1KCHB	190 mm [7.5 in] cat whisker wobble	Replacement head with actuator for the LSYKC__8B Series cat whisker wobble actuated limit switch with fluorocarbon seals
LSZ1KBHB	190 mm [7.5 in] cat whisker wobble w/ low temp. seals	Replacement head with actuator for the LSYKB__8B Series cat whisker wobble actuated limit switch with fluorosilicone seals
LSZ1KCHC	140 mm [5.5 in] coil spring wobble	Replacement head with actuator for the LSYKC__8C Series coil spring wobble actuated limit switch with fluorocarbon seals
LSZ1KBHC	140 mm [5.5 in] coil spring wobble w/ low temp. seals	Replacement head with actuator for the LSYKB. 8C Series coil spring wobble actuated limit switch with fluorosilicone seals

ADDITIONAL MATERIALS

The following associated literature is available at sensing.honeywell.com:

- Product range guide
- Product installation instructions
- Application notes
- CAD drawings
- Product images

For more information

Honeywell Sensing and Internet of Things services its customers through a worldwide network of sales offices and distributors. For application assistance, current specifications, pricing or the nearest Authorized Distributor, visit sensing.honeywell.com or call:

Asia Pacific	+65 6355-2828
Europe	+44 (0) 1698 481481
USA/Canada	+1-800-537-6945

Honeywell Sensing and Internet of Things
9680 Old Bailes Road
Fort Mill, SC 29707
www. honeywell.com

⚠ WARNING
PERSONAL INJURY

DO NOT USE these products as safety or emergency stop devices or in any other application where failure of the product could result in personal injury.

Failure to comply with these instructions could result in death or serious injury.

⚠ WARNING
MISUSE OF DOCUMENTATION

- The information presented in this product sheet is for reference only. Do not use this document as a product installation guide.
- Complete installation, operation, and maintenance information is provided in the instructions supplied with each product.

Failure to comply with these instructions could result in death or serious injury.

Warranty/Remedy

Honeywell warrants goods of its manufacture as being free of defective materials and faulty workmanship during the applicable warranty period. Honeywell's standard product warranty applies unless agreed to otherwise by Honeywell in writing; please refer to your order acknowledgment or consult your local sales office for specific warranty details. If warranted goods are returned to Honeywell during the period of coverage, Honeywell will repair or replace, at its option, without charge those items that Honeywell, in its sole discretion, finds defective. **The foregoing is buyer's sole remedy and is in lieu of all other warranties, expressed or implied, including those of merchantability and fitness for a particular purpose. In no event shall Honeywell be liable for consequential, special, or indirect damages.**

While Honeywell may provide application assistance personally, through our literature and the Honeywell web site, it is buyer's sole responsibility to determine the suitability of the product in the application.

Specifications may change without notice. The information we supply is believed to be accurate and reliable as of this writing. However, Honeywell assumes no responsibility for its use.

002423-1-EN | 1 | 3/18
© 2018 Honeywell International Inc. All rights reserved.

Honeywell

Mouser Electronics

Authorized Distributor

Click to View Pricing, Inventory, Delivery & Lifecycle Information:

Honeywell:

LSYDC3KY-FP LSYKC3KQ-8CFP LSYLB7MR-FP LSYMB4NX-FP LSYMC4NX-FP LSYNB4LX-FP LSYNC3KP-FP LSYPC3KP-FP LSYRC3KP-FP LSYRC5KP-FP LSYRC5KQ-FP LSYUC3KP-FP LSYUC3KQ-FP LSYVC3KP-FP LSYAB3KPC-FP LSYAB3KP-FP LSYAB3KQ-FP LSYAB4LX-FP LSYAC3KDD-FP LSYAC3KPB-FP LSYAC3KPC-FP LSYAC3KP-FP LSYAC3KQ-FP LSYAC3KY-FP LSYAC4LX-FP LSYAC5KP-FP LSYAC5KQ-FP LSYAC7LR-FP LSYCC3KP-FP LSYCC3KQ-FP LSYDC3KPC-FP LSYDC3KP-FP LSYDC3KQ-FP LSYDC5KP-FP LSYDC5KY-FP LSYEC3KP-FP LSYEC3KQ-FP LSYEC3KY-FP LSYFB4LX-FP LSYFC3KP-FP LSYFC3KQ-FP LSYFC3KY-FP LSYHC3KP-FP LSYJB4LX-7AFP LSYCC3KY-FP LSYJC3KP-7AFP LSYAC5KY-FP LSYBC3KP-FP LSYCC5KP-FP LSYEC5KY-FP LSYFC5KQ-FP LSYJC3KQ-7AFP LSYMC4NXB-FP LSYMC7NR-FP LSYUC3KY-FP LSYUC4LX-FP LSYWC3KY-FP LSYAB3KE-FP LSYAC3KC-FP LSYAC5KPC-FP LSYBC3KQ-FP LSYBC5KP-FP LSYCC5KY-FP LSYDC4LX-FP LSYDC5KQ-FP LSYEC4LX-FP LSYEC5KP-FP LSYHC4LX-FP LSYNC3KPC-FP LSYNC3KQ-FP LSYNC4LX-FP LSYNC5KQ-FP LSYPB3KP-FP LSYPC3KY-FP LSYPC4LX-FP LSYRC4LX-FP LSYUC5KQ-FP LSYVC3KQ-FP LSYWB3KQ-FP LSYWC3KP-FP LSYWC5KQ-FP LSYPC3KQ-FP LSYDC9KP-FP