Dec.1.2019 Copyright 2019 HIROSE ELECTRIC CO., LTD. All Rights Reserved.
In case of consideration for using Automotive equipment / device which demand high reliability, kindly contact our sales window correspondents.

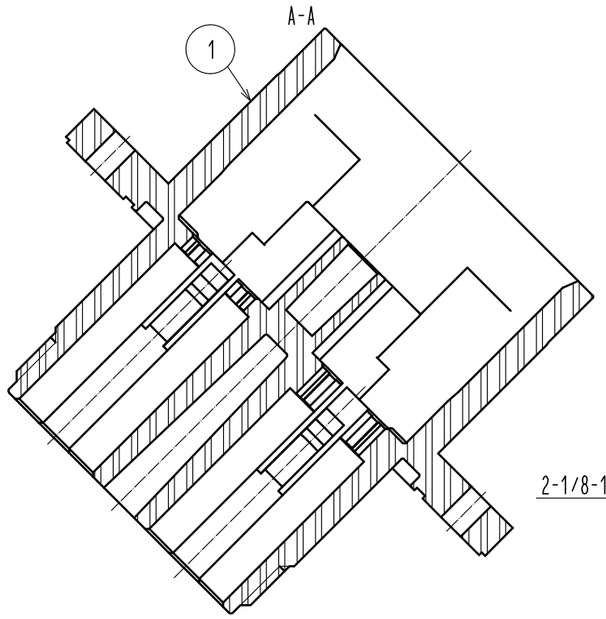

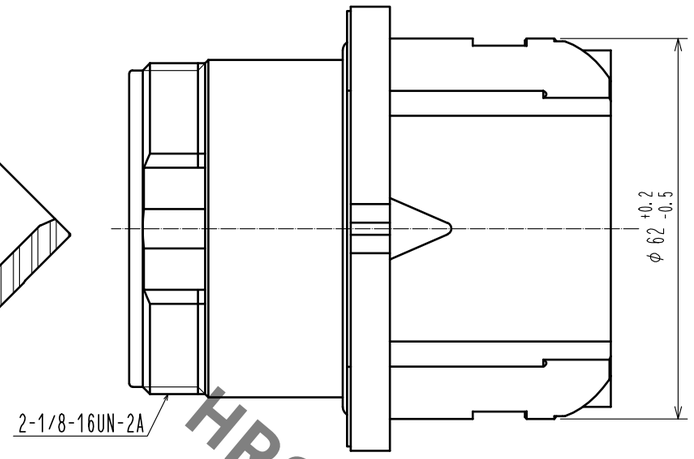

Embedded Contact State Diagram

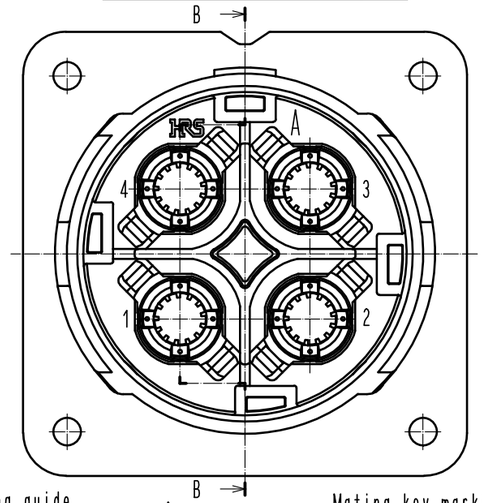

3 Figure B-B 2 step sequence connection (With contacts embedded)

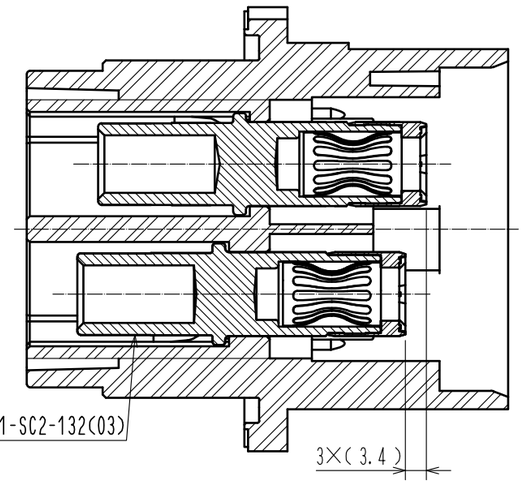

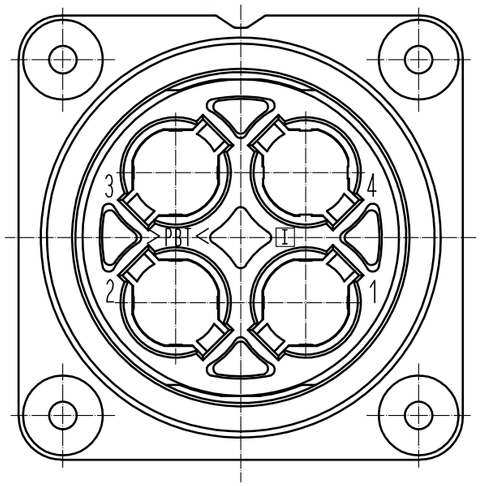

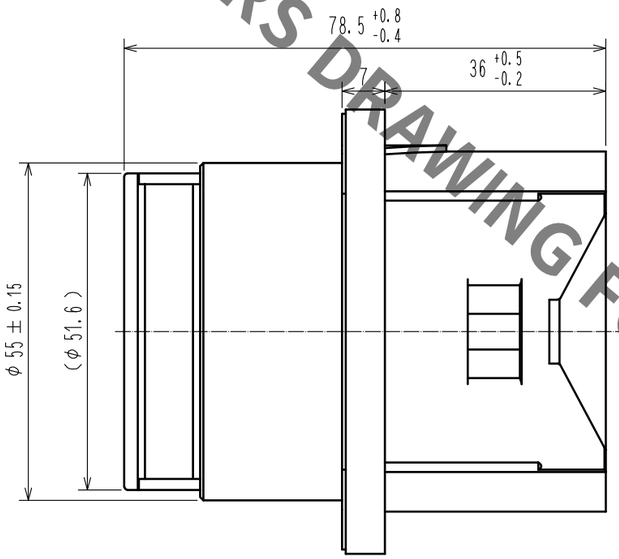

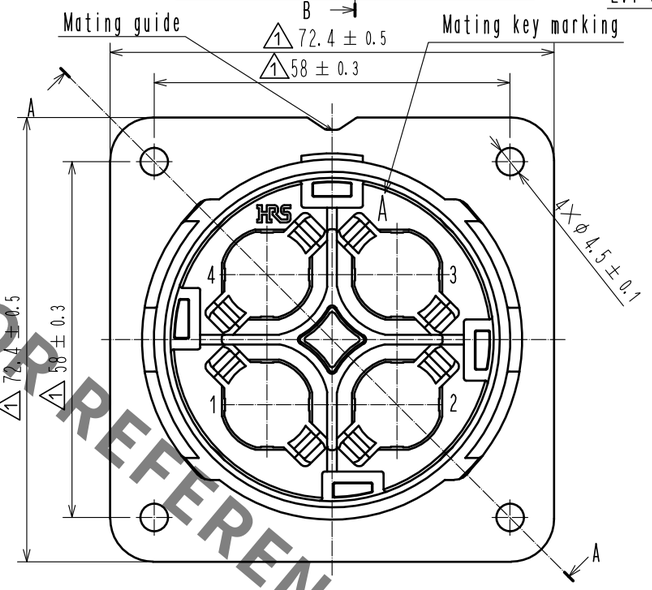

HRS DRAWING FOR REFERENCE

2 Figure 1 Recommended Panel Instatallation State Diagram and Dimesnions Front Mount(1:2)

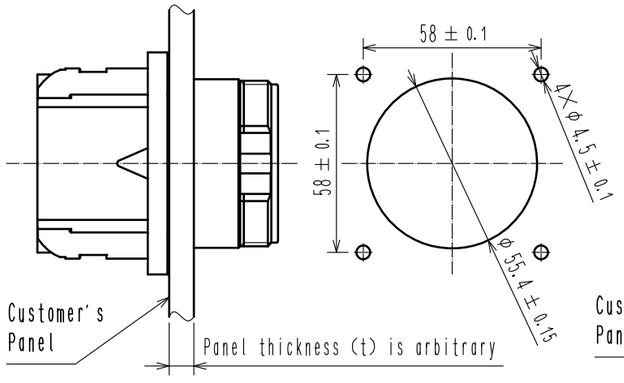

2 Figure 2 Recommended Panel Instatallation State Diagram and Dimesnions Back Mount (1:2)

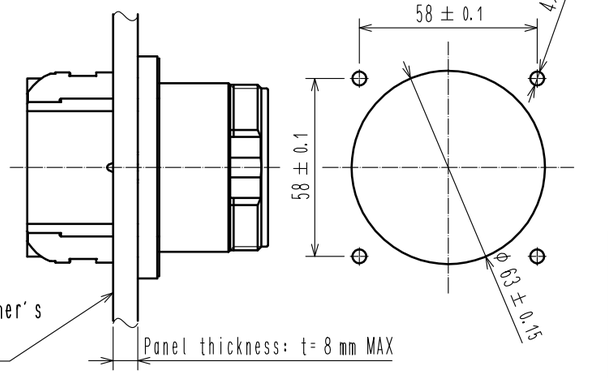

Notes 1 Applicable crimping contact: EV1-SC2-132(03) (CL139-0012-7-03) (38mm² contact)
EV1-SC2-112(03) (CL139-0013-0-03) (22mm² contact)
2 Figure 1 and 2 shows the recommended installation state and the dimensions.
3 The contacts are assembled in a 2 step connection sequence with contact No. 4 at one level and contacts No. 1, 2 and 3 at a different level.
4 Please assemble this product in coordination with the assembly manual ETAD-C0336.
5 This product is not hot pluggable.
6 Applicable crimp contact extracting tool: EM52M-SC-TP(CL150-0262-1-00).

⚠ WARNING

NO.	MATERIAL	FINISH , REMARKS	NO.	MATERIAL	FINISH , REMARKS
1	Polybutylene terephthalate	(Black) UL94V-0			

UNITS	SCALE	COUNT	DESCRIPTION OF REVISIONS	DESIGNED	CHECKED	DATE
mm	1 : 1	1 4	DIS-C-00002078	WR. AJIRO	TP. KOMATSU	18. 07. 17

HRS HIROSE ELECTRIC CO., LTD.

APPROVED	SU. OBARA	15. 12. 17
CHECKED	YH. YAMADA	15. 12. 17
DESIGNED	YS. SAKODA	15. 12. 17
DRAWN	THOMAS FORAN	15. 12. 17

DRAWING NO. EDC3-118749-00
PART NO. EM52M-BR-4SCA
CODE NO. CL138-0050-0-00 1 1/1

FORM HC0011-5-7

Mouser Electronics

Authorized Distributor

Click to View Pricing, Inventory, Delivery & Lifecycle Information:

Hirose Electric:

EM52M-BR-4SCA