Jul.1.2019 Copyright 2019 HIROSE ELECTRIC CO., LTD. All Rights Reserved.
In case of consideration for using Automotive equipment / device which demand high reliability, kindly contact our sales window correspondents.

	COUNT	DESCRIPTION OF REVISIONS	BY	CHKD	DATE		COUNT	DESCRIPTION OF REVISIONS	BY	CHKD	DATE
△					. .	△					. .
△					. .	△					. .
△					. .	△					. .

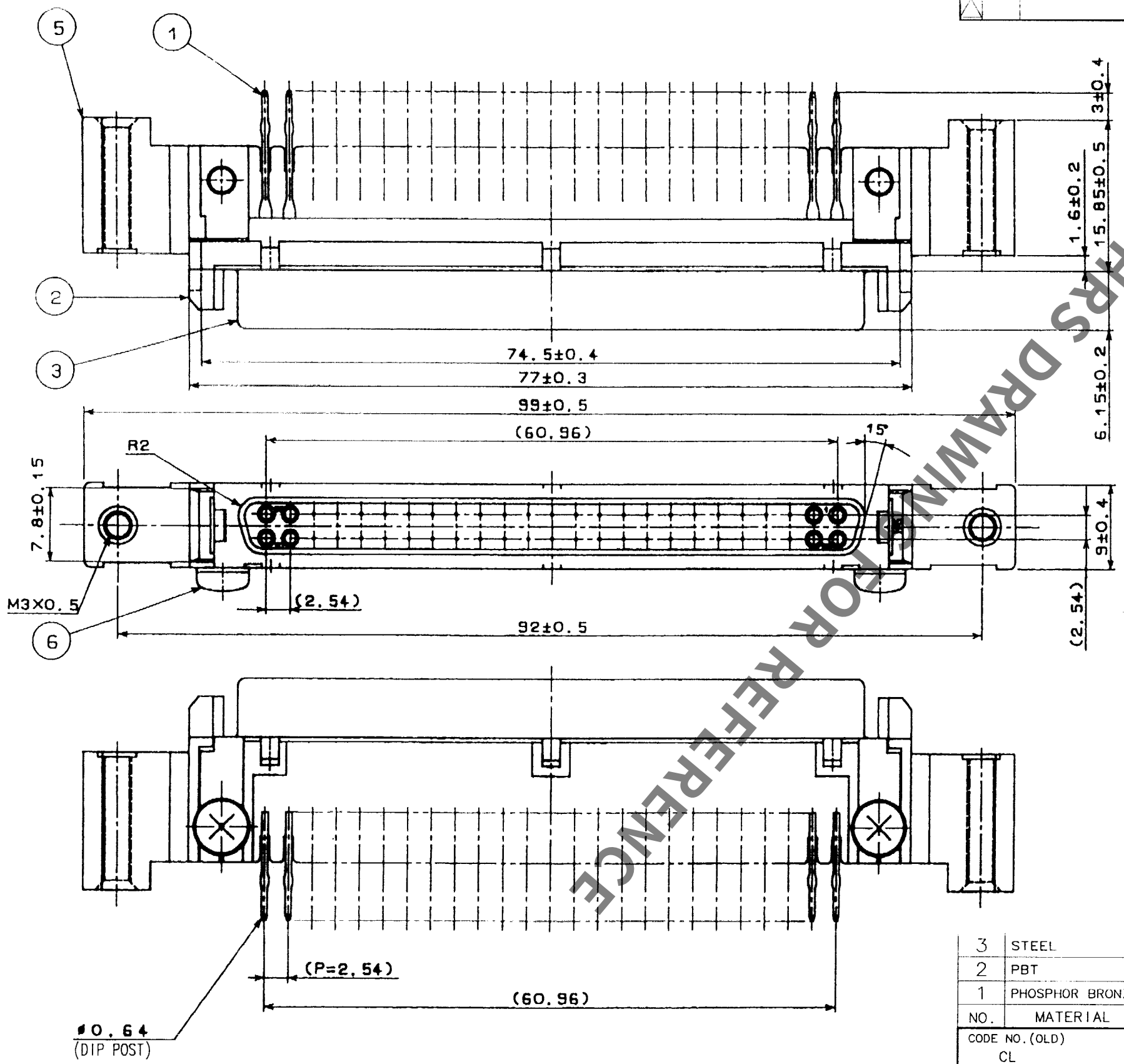

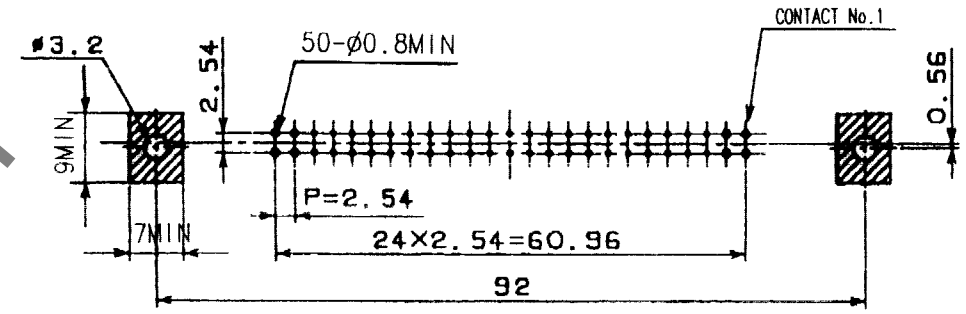

RECOMMENDED PC BOARD HOLE PATTERN
(SCALE 1/1)

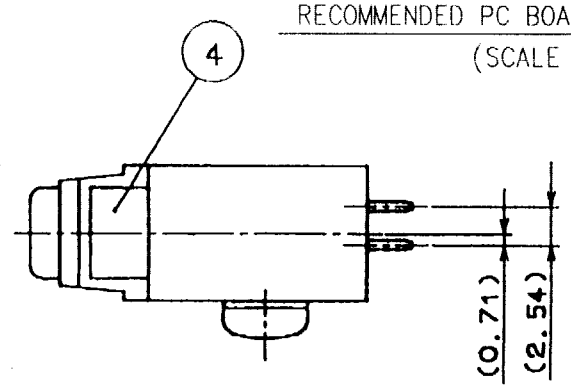

NOTES
1. THICKNESS OF PC BOARD SHALL BE 1.6mm.
2. FIG. RECOMMENDED PC BOARD HOLE PATTERN IS SHOWN MOUNTING SIDE. HATCHING AREA SHALL BE PATTERN PROFIBITED AREA.
3. THE DIMENSIONS IN PARENTHESES ARE FOR REFERENCE.

HRS DRAWING FOR REFERENCE

NO.	MATERIAL	FINISH, REMARKS	NO.	MATERIAL	FINISH, REMARKS	
3	STEEL	NICKEL PLATING	6	STEEL	NICKEL PLATING	M3×0.5×8
2	PBT	UL94V-0(BLACK)	5	ZINC ALLOY DIE CASTING	NICKEL PLATING	
1	PHOSPHOR BRONZE	SELECTIVE GOLD PLATING 0.3μm	4	PHOSPHOR BRONZE	NICKEL PLATING	

CODE NO.(OLD)	DRAWN	DESIGNED	CHECKED	APPROVED	RELEASED
CL	T. Kanazawa 03.9.8	T. Kanazawa 03.9.8	Y. Enami 03.09.08	H. Miwa 03.09.08	. .

SCALE 2 : 1	DRAWING NO. EDC3-025454-01	PART NO. DN20B-50S(50)
UNITS mm	HRS HIROSE ELECTRIC CO., LTD	CODE NO. CL225-0048-0-50 1/1

TO
Q
USA

FORM NO.229

Mouser Electronics

Authorized Distributor

Click to View Pricing, Inventory, Delivery & Lifecycle Information:

Hirose Electric:

DN20B-50S(50)