Jan.1.2022 Copyright 2022 HIROSE ELECTRIC CO., LTD. All Rights Reserved.
In case of consideration for using Automotive equipment / device which demand high reliability, kindly contact our sales window correspondents.

	COUNT	DESCRIPTION OF REVISIONS	BY	CHKD	DATE		COUNT	DESCRIPTION OF REVISIONS	BY	CHKD	DATE
△					. .	△					. .
△					. .	△					. .
△					. .	△					. .

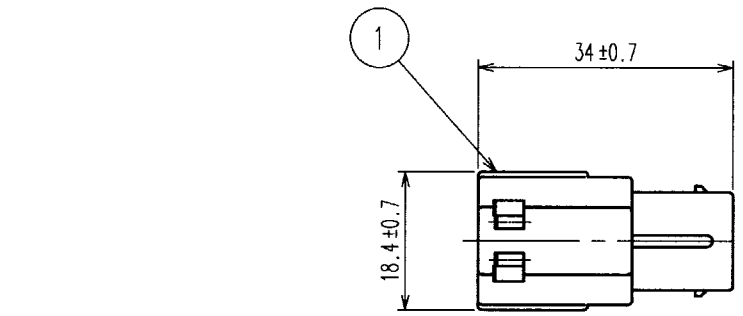

NOTE1. A SUITABLE RETAINER FOR CABLE SIZE SHALL BE ASSEMBLED BEFORE USE.

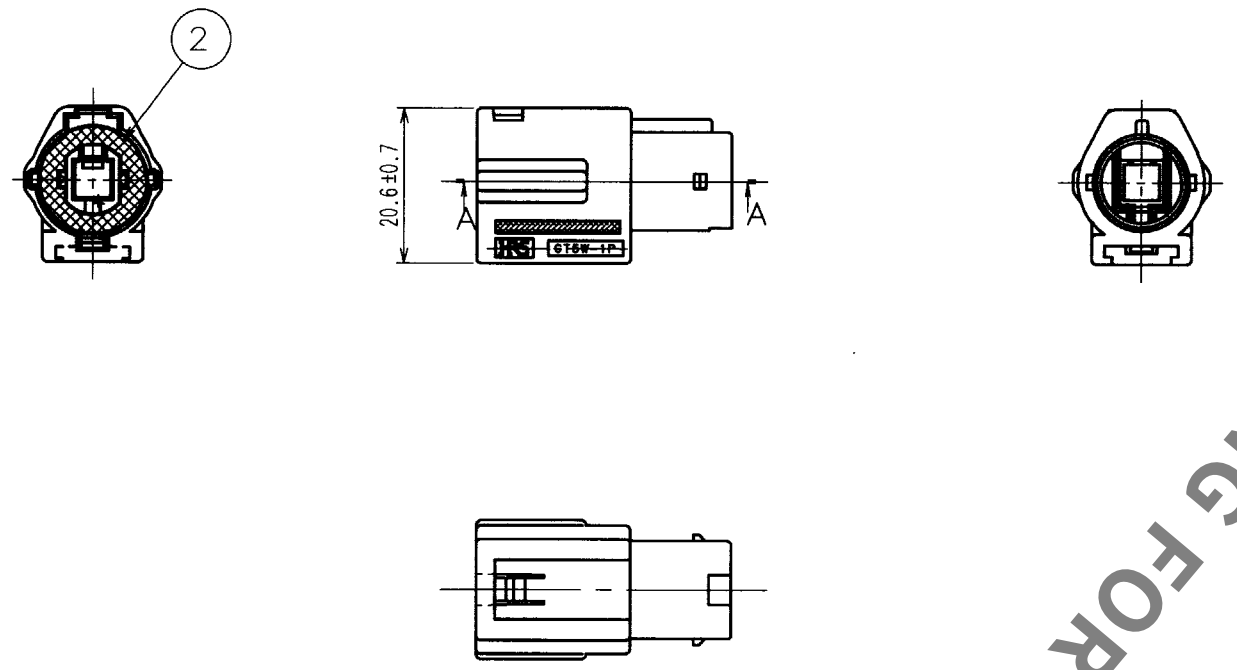

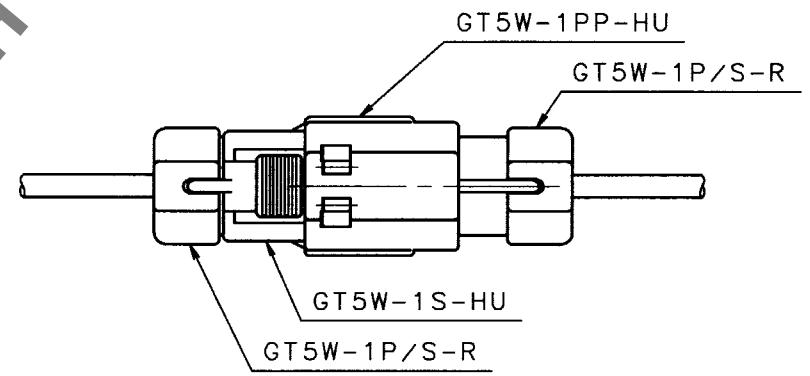

MATED CONNECTORS

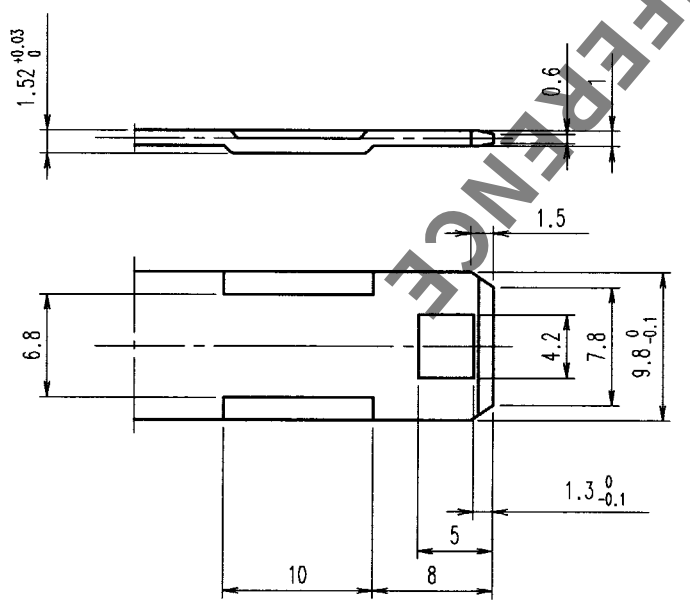

DETAIL OF RECOMMENDED FITTING PLATE(2:1)

HRS DRAWING FOR REFERENCE

NO.	MATERIAL	FINISH, REMARKS	NO.	MATERIAL	FINISH, REMARKS
1	PBT	LIGHT GRAY	2	SILICONE RUBBER	WHITE

CODE NO.(OLD)	DRAWN	DESIGNED	CHECKED	APPROVED	RELEASED
CL	S.KURIYA '02.10.15	S.KURIYA '02.10.15	M. Okada '02·10·18	K. Sato '02·10·18	. .

SCALE 1 : 1	DRAWING NO. EDC3-165492	PART NO. GT5W-1PP-HU
UNITS mm	HRS HIROSE ELECTRIC CO., LTD	CODE NO. CL755-0070-1 1/1

TO

FORM NO.229

Mouser Electronics

Authorized Distributor

Click to View Pricing, Inventory, Delivery & Lifecycle Information:

Hirose Electric:
GT5W-1PP-HU